ISSUED FOR BID

SPECIFICATIONS

FOR THE

HADDONFIELD BOARD OF EDUCATION

CONTRACT #25.14 –

NEW HOPKINS GYMNASIUM

&

ADDITION & ALTERATION TO J.F. TATEM ELEMENTARY SCHOOL

Haddonfield Board of Education
95 Grove Street
Haddonfield, New Jersey 08033

Attention: Mr. Michael Catalano
School Business Administrator

Telephone #856-429-7510 / Fax #856-429-6015
Email: mcatalano@haddonfield.k12.nj.us

LAN Job #2.20277.25.14
August 13, 2026

LAN ASSOCIATES
Engineering, Planning, Architecture, Surveying Inc.

SPECIFICATIONS

FOR THE

HADDONFIELD BOARD OF EDUCATION

CONTRACT #25.14 –

NEW HOPKINS GYMNASIUM

&

ADDITION AND ALTERATIONS TO J.F. TATEM ELEMENTARY SCHOOL

Haddonfield Board of Education
95 Grove Street
Haddonfield, New Jersey 08033

Attention: Mr. Michael Catalano
School Business Administrator

Telephone #856-429-7510 / Fax #856-429-6015
Email: mcatalano@haddonfield.k12.nj.us

Responsible for preparation of Divisions 1-12

Jeffrey M. Potter, AIA, LEED AP
Registered Architect
NJ RA #21AI02015400

LAN Job #2.20277.25.14
August 13, 2026

LAN ASSOCIATES | Engineering, Planning, Architecture, Surveying Inc.

SPECIFICATIONS

FOR THE

HADDONFIELD BOARD OF EDUCATION

CONTRACT #25.14 –

NEW HOPKINS GYMNASIUM

&

ADDITION AND ALTERATIONS TO J.F. TATEM ELEMENTARY SCHOOL

Haddonfield Board of Education
95 Grove Street
Haddonfield, New Jersey 08033

Attention: Mr. Michael Catalano
School Business Administrator

Telephone #856-429-7510 / Fax #856-429-6015
Email: mcatalano@haddonfield.k12.nj.us

Responsible for preparation of Divisions 22-28

Thomas Wighard, PE
Professional Engineer
NJ PE #24GE04901100

LAN Job #2.20277.25.14
August 13, 2025

LAN ASSOCIATES | Engineering, Planning, Architecture, Surveying Inc.

SPECIFICATIONS

FOR THE

HADDONFIELD BOARD OF EDUCATION

CONTRACT #25.14 –

NEW HOPKINS GYMNASIUM

&

ADDITION AND ALTERATIONS TO J.F. TATEM ELEMENTARY SCHOOL

Haddonfield Board of Education
95 Grove Street
Haddonfield, New Jersey 08033

Attention: Mr. Michael Catalano
School Business Administrator

Telephone #856-429-7510 / Fax #856-429-6015
Email: mcatalano@haddonfield.k12.nj.us

Responsible for preparation of Divisions 31-33 (TES)

Justin Provencher, PE
Professional Engineer
NJ PE #24GE05659300

LAN Job #2.20277.25.14
August 13, 2025

LAN ASSOCIATES | Engineering, Planning, Architecture, Surveying Inc.

SPECIFICATIONS

FOR THE

HADDONFIELD BOARD OF EDUCATION

CONTRACT #25.14 –

NEW HOPKINS GYMNASIUM

&

ADDITION AND ALTERATIONS TO J.F. TATEM ELEMENTARY SCHOOL

Haddonfield Board of Education
95 Grove Street
Haddonfield, New Jersey 08033

Attention: Mr. Michael Catalano
School Business Administrator

Telephone #856-429-7510 / Fax #856-429-6015
Email: mcatalano@haddonfield.k12.nj.us

Responsible for preparation of
Divisions 3 & 5

Anthony J. Varano
Professional Engineer
License # 24GE05086900

LAN Job #2.20277.25.14
August 13, 2025

VARANO TOVINSKY LLC
STRUCTURAL ENGINEERS

SPECIFICATIONS

FOR THE

HADDONFIELD BOARD OF EDUCATION

CONTRACT #25.14 –

NEW HOPKINS GYMNASIUM

&

ADDITION AND ALTERATIONS TO J.F. TATEM ELEMENTARY SCHOOL

Haddonfield Board of Education
95 Grove Street
Haddonfield, New Jersey 08033

Attention: Mr. Michael Catalano
School Business Administrator

Telephone #856-429-7510 / Fax #856-429-6015
Email: mcatalano@haddonfield.k12.nj.us

Responsible for preparation of Divisions 31-33 (HG)

Elio Qorri, PE
Professional Engineer
NJ PE #24GE06050100

LAN Job #2.20277.25.14
August 13, 2025

LAN ASSOCIATES | Engineering, Planning, Architecture, Surveying Inc.

SPECIFICATIONS

FOR THE

HADDONFIELD BOARD OF EDUCATION

CONTRACT #25.14 –

NEW HOPKINS GYMNASIUM

&

ADDITION AND ALTERATIONS TO J.F. TATEM ELEMENTARY SCHOOL

Haddonfield Board of Education
95 Grove Street
Haddonfield, New Jersey 08033

Attention: Mr. Michael Catalano
School Business Administrator

Telephone #856-429-7510 / Fax #856-429-6015
Email: mcatalano@haddonfield.k12.nj.us

Responsible for preparation of Divisions 21

Christopher Crivello
Professional Engineer
NJ PE #GE57622

LAN Job #2.20277.25.14
August 13, 2025

RAN FIRE PROTECTION ENGINEERING

HADDONFIELD BOARD OF EDUCATION

REQUEST FOR BIDS

Contract #25.14 – New Hopkins Gymnasium (HG), and
Addition & Alteration to J.F. Tatem Elementary School (TES)

Bid Advertisement

The Haddonfield Board of Education of Haddonfield, New Jersey, hereby advertises for competitive bids in accordance with N.J.S.A. 18A:18A-21(a) (b) for a single overall contract in accordance with NJSA 18A:18A-18(b) (2):

Contract: **#25.14A - Single Overall Contract** for
Title of Bid: New Hopkins Gym

Contract: **#25.14B - Single Overall Contract** for
Title of Bid: Addition & Alterations to J.F. Tatem ES

Contract: **#25.14C - Single Overall Contract** for
Title of Bid: New Hopkins Gym and Addition & Alterations to J.F. Tatem ES

Bidders shall be prequalified by the New Jersey Division Property Management and Construction in the trade categories listed below, or name such prequalified subcontractors:

Trade Category #	Title
C008 or C009	General Construction or General Construction/Alterations and Additions

J.F. Tatem Elementary School: *The scope of work for the Alterations at J.F. Tatem Elementary School includes but is not limited to: Alterations to convert an existing Library into multiple Classrooms including all new finishes, wall partitions, electrical power & lighting, suspended acoustic tile ceilings, and modifications & upgrades to the existing HVAC system. Work also includes the installation of a wall with door access for the existing nurse's suite, a renovation of the existing cafeteria kitchen and pantry, and addition of a new office within the existing music room. The scope also includes the new construction of a two story media center and classroom addition. The addition includes a 2-story exterior stair. The addition will be freestanding and attached to the building through a connecting corridor on both stories with floor, wall and roof expansion joints. The exterior envelope will closely match the existing facade materiality of brick and will include the use of metal panels, and glass curtain wall.*

Hopkins Gym: *The Hopkins Gym parcel is a new gymnasium building to be built on the existing Haddonfield High School lot. This new construction will be an A-3 assembly occupancy. This building will be constructed as slab-on-grade with concrete and block foundations and footings. The exterior envelope will feature brick masonry, cast-stone details, and translucent daylighting sandwich panels. Bearing CMU and steel columns will support the steel joist roof, metal deck, and partial modified bitumen roof/partial standing seam metal roof over continuous insulation. The construction type will be II-B and the full building will be sprinklered. The program of this building includes a high school basketball gym, a wrestling gym with an office, locker rooms, trainer's room, toilet rooms, shower room, electrical and*

plumbing room, and a couple of storage rooms. The site work on this cleared and developed site will include a parking lot that will serve the new gym, site lighting, and landscaping.

Bid Docs available on **Thursday, August 13th, 2026**

The bid documents have been prepared by the firm **LAN Associates Engineering, Planning, Architecture, Surveying, Inc.** (LAN). All necessary bid specifications and bid forms are available (via an electronic web link) between the hours of 9:00 a.m. and 4:00 p.m. on business days by LAN's office. Bid documents shall be made available via a web link by emailing biddocs@lanassociates.com with copy to chloe.letteri@lanassociates.com. Email requests must reference the *New Hopkins Gymnasium, and Addition & Alteration to J.F. Tatem Elementary School* and must include Bidder's Company, Company Address, Point of Contact, Telephone and if applicable, Facsimile numbers, and Bidder's email address. Physical copies/prints of documents will not be sent.

All questions, comments, and inquiries shall be submitted to LAN (Attention: Mr. Jeff Potter at jeff.potter@lanassociates.com, with copy to Ms. Chloe Letteri at chloe.letteri@lanassociates.com) in writing and will be responded through Addenda sent to all bidders via email.

Bidders are requested to submit in accordance with N.J.S.A. 18A: 18A – 18(b)(2) one Lump Sum Bid for all work and materials. Bids must be sealed and delivered to the Haddonfield Board of Education Offices (Office of the School Business Administrator/Board Secretary, Michael Catalano) located at 95 Grove Street, Haddonfield, New Jersey ***on or before*** date and time indicated below. It is recommended that bidders send their responses through the US Postal Service certified mail or overnight mail which provides **certification of delivery to the sender** or to hand deliver bids between 9:00 AM and 2:00 PM daily. The Board shall not be responsible for bids lost in transit, delivered to the wrong address, or otherwise not hand-delivered to the address provided. The envelope to bear the following information:

Title: **Contract #25.14 – New Hopkins Gymnasium (HG), and Addition & Alteration to J.F. Tatem Elementary School (TES)**
Name and Address of the Bidder
Date: **September 17th, 2026**
Time: **2:00 p.m.**

Please note that the bid opening process will begin on the above advertised date at **2:00 p.m.** All attendees shall report to the Board of Education Offices and will be escorted to a meeting space by the Owner. Bids may also be submitted to the School Business Administrator/Board Secretary, Mr. Michael Catalano, or his designee at the bid opening meeting, prior to the advertised date and time. On the advertised date and time, the School Business Administrator shall publicly receive and open all bids and announce the names of the vendors and their prices. Bids may be viewed by interested parties on the advertised bid date and time.

No bids shall be received after the time designated in the advertisement. (N.J.S.A. 18A:18A-21(b)). The Board of Education does not accept electronic (e-mail) submission of bids.

There will be a pre-bid meeting on **Tuesday, August 25th, 2026, at 10:00 AM**. While attendance is not mandatory, all prospective bidders are strongly encouraged to attend this important meeting, which will be starting at the Haddonfield Board of Ed office, located at 95 Gove St, Haddonfield, NJ 08033. It is the intent of the Pre-Proposal Meeting to offer all interested bidders access to the project site following the pre-

proposal meeting. Failure to attend the Pre-Bid meeting will not excuse any bid mistake and/or omission due to bidder's ignorance of information disseminated at the meeting.

Additional time sensitive dates for the project are:

Final Day for Questions to the Architect:	Tuesday, September 1st, 2026, by 5:00 PM
Date of Issuance of Addendum (if necessary):	Thursday, September 3rd, 2026, by 5:00 PM
Receive Bids:	Thursday, September 17th, 2026, by 2:00 PM
Notice of Award/Notice to Proceed, on or about:	Thursday, September 24th, 2026
Site Mobilization:	Monday, November 2nd, 2026
Substantial Completion:	Thursday, December 23, 2027 (Tatem ES)
	Friday, March 3, 2028 (Hopkins Gym)

All bidders are required to comply with the requirements of N.J.S.A. 10:5-31 et seq., Affirmative Action Against Discrimination (N.J.A.C. 17:27-1 et seq.) An Initial Project Workforce Report will be required from the successful contractor. (Form AA-201).

Contractors bidding on this project are to comply with the requirements of the Prevailing Wage Rate Determination pursuant to N.J.S.A. 34:11-56.25.
A bidder on a public works project for a Board of Education where the cost of the work exceeds $20,000.00 must first have been qualified by the Department of the Treasury, Division of Property Management and Construction, pursuant to N.J.S.A. 18A:18A-27 through 33, and shall submit with his bid a Prequalification Affidavit, a copy of a valid and active NOTICE OF CLASSIFICATION, a certified copy of a Total Amount of Uncompleted Contracts Form and an Affidavit that subsequent to the latest such statement submitted by him, there has been no material adverse change in his qualification information except as set forth in said Affidavit. Failure to submit these forms may result in the disqualification and rejection of the bid.

Each bid shall be accompanied by a bid bond, cashier's check or certified check made payable to the Haddonfield Board of Education, for ten percent (10%) of the amount of the total bid, however, not to exceed $20,000.

Bidders are required to provide a Consent of Surety stating that if awarded the bid, said surety will provide a performance bond for 100% of the contract amount.

Corporate bidders are required by law (Chapter 33, Laws of 1977) to submit a list of names and addresses of all stockholders owning 10% or more of their stock.

The bid package will also include other documents that must be completed and returned with the bid. Failure to comply with Instructions to Bidders and to complete and submit all required forms, may be cause for disqualification and rejection of the bid.

All contractors named in this proposal, shall possess a valid Contractor's Registration Certificate pursuant to N.J.S.A. 34:11-56.48 et seq., at the time the proposal is received by the Board of Education.

No bids may be withdrawn, except in accordance with the Public School Contracts Law, for a period of sixty (60) days after the date set for opening of bids.

The Board of Education reserves the right to reject any or all bids, pursuant to N.J.S.A. 18A:18A-18, N.J.S.A. 18A:18A-2(s), (t), (x), (y), 18A:18A-4(a-c), and N.J.S.A. 18A:18A-22, and to waive any informalities that may be in the best interest of the board.

CONFIDENTIALITY OF ELECTRONIC FILE TRANSMISSIONS

The Drawings, renderings, photographs, blueprints, specifications, and bidding documents are considered proprietary and confidential property of the Haddonfield School District. All electronic file transfers of this information to the bidders and/or contractors is specifically designated as "confidential" and "business proprietary," the receiving party shall keep such information strictly confidential and shall not disclose it to any other person except to (1) its employees, (2) those who need to know the content of such information in order to perform services or construction solely and exclusively for the Project, or (3) its consultants, contractors and subcontractors whose contracts include similar restrictions on the use of such confidential and proprietary information. The information transmitted in the bidding documents relates to a school construction project and the security and confidentiality of those documents is critical to the health and safety of the children. Therefore, any bidder and/or contractor and/or subcontractor discovered to have published or disseminated this information in the public domain, unless pursuant to the exceptions stated above, shall be subject to significant penalty and may not be permitted to bid on the instant project.

As a condition precedent to receipt of the Bid Documents, all bidders must agree to dispose of, destroy and/or return the information forwarded to it within three (3) days of the Bid submission date.

Michael Catalano
School Business Administrator / Board Secretary
Haddonfield Board of Education
95 Grove Street
Haddonfield, New Jersey 08033
Fax: 856-429-6015
Email: mcatalano@haddonfield.k12.nj.us

INDEX

Review all sections that may affect your work and include applicable requirements. All contracts are based on scope information within the whole document set and are not limited to "trade" drawings and specifications.

BID SPECIFICATIONS & GENERAL REQUIREMENTS	
	Bid Advertisement
	Index - Bidding Manual
	Ethics in Purchasing Statement to Vendors
	Unauthorized Orders
	Advisory Information for Bidders
	1. Promptness of Bid Submittal
	2. Mail
	3. Hand Deliver Bids – Suggested Practice
	Bid Checklist (A)
	Reminder Checklist (B)
GENERAL SPECIFICATIONS (for Bidding)	
1, 2	***Instructions to Bidders***
3,4	Bid Opening
5	Affirmative Action Requirements
6	American Goods
7	Americans with Disabilities Act
8,9	Anti-Bullying Bill of Rights and Anti-Discrimination
10	Alternate Dispute Resolution Process
11	Bid Guarantee
12	Bid Proposal Form
14	Bidder's Responsibility for Bid Submittal
15	Business Registration Certificate
16	Certificate from Surety Company
17	Challenges to Bid Specifications
18	Change Orders
19	Contracts
20, 21	Contractor's Registration Evidence/OSC
22	Criminal History Background Checks

23	Debarment, Suspension, or Disqualification
24	Federal Non-Debarment Certification
25	Documents, Missing/Illegible
26	Document Signature- Original; Blue Ink
27	Equipment Certification
28	Examination of Specifications, Acknowledgement
29	False Material Representation
30	Force Majeure
31	Insurance and Indemnity
32	Interpretations and Addenda
33	Iran Disclosure
34	Liability - Copyright
35	Liquidated Damages
36	Maintenance Bonds
37	Non-Collusion Affidavit
38	Notice (Authorization) to Proceed
39	Payments
40	Payment, Partial, Withholding and Prompt
41	Performance Bond/Contract Amount
42	Political Contributions Disclosure - Requirements
42	Political Contribution Disclosure Statement
43	Pre-Bid Meeting
44	Pre-Qualification of Bidders
45	Prevailing Wages
46	Qualification of Bidders
47	Resident Citizens
48	Renewal of Contract
49	Right to Know Law
50	Stockholders Disclosure
51	Subcontracting Disclosure Statement
52	Subcontracting: Prohibitions: Hold Harmless
53	Taxes

54	Termination of Contract
55	Withdrawal of Bids
56	Award of Contract
57	Experience
58	Number of Working Days
59	Pre-Bid Meeting
60	Trade Classification

BID DOCUMENTS AND REQUIRED DOCUMENTATION

Acknowledgement of Addenda

Byrd Act Certification

Chapter 271 - Political Contribution Disclosure Form

C.271 Political Contribution Contractor Instructions and
List of Agencies with Elected Officials Required

Contractor Questionnaire/Certification

Certification of Non-Debarment for Federal Government Contracts

Contractor's Registration Certification

Equipment Certification

Iran Disclosure

Non-Collusion Affidavit

Pre-Qualification Affidavit

Prevailing Wages Certification

Stockholder/Partnership Disclosure Form

Subcontractor's Disclosure Statement

1. Other Trades

Appendix A -- Americans with Disabilities Act of 1990

Exhibit B –Equal Employment Opportunity

Division of Public Contracts Equal Employment Sample

AA201 Instructions for Completing the Initial Project Workforce Report

Appendix Section
Model Performance Bond – *Sample*
Surety Disclosure Statement and Certification - *Sample*

Reminder from Board of Education

Ethics in Purchasing

School District Responsibility

Recommendation of Purchases
It is the desire of the Board of Education to have all Board employees and officials practice exemplary ethical behavior in the procurement of goods, materials, supplies, and services.

School district officials and employees who recommend purchases shall not extend any favoritism to any vendor. Each recommended purchase should be based upon quality of the items, service, price, delivery, and other applicable factors in full compliance with N.J.S.A. 18A:18A-1 et seq.

Solicitation/Receipt of Gifts – Prohibited
School district officials and employees are prohibited from soliciting and receiving funds, gifts, materials, goods, services, favors, and any other items of value from vendors doing business with the Board of Education or anyone proposing to do business with the Board of Education.

Vendor Responsibility

Offer of Gifts, Gratuities -- Prohibited
Any vendor doing business or proposing to do business with the Board of Education, shall neither pay, offer to pay, either directly or indirectly, any fee, commission, or compensation, nor offer any gift, gratuity, or other thing of value of any kind to any official or employee of the Board of Education or to any member of the official's or employee's immediate family.

Vendor Influence -- Prohibited
No vendor shall cause to influence or attempt to cause to influence, any official or employee of the Board of Education, in any manner which might tend to impair the objectivity or independence of judgment of said official or employee.

Vendor Certification

Vendors or potential vendors will be asked to certify that no official or employee of the Board of Education or immediate family members are directly or indirectly interested in this request or have any interest in any portions of profits thereof. The vendor participating in this request must be an independent vendor and not an official or employee of the Board of Education.

_____
Michael Catalano
Business Administrator/Board Secretary

HADDONFIELD BOARD OF EDUCATION

ADVISORY INFORMATION FOR BIDDERS

PROMPTNESS OF BID SUBMITTAL

It is the responsibility of the bidder to ensure that their bid is presented in a sealed envelope to the Office of the School Business Administrator/Board Secretary of designee, prior to the advertised bid date and time. The advertised bid date and time for this bid is on **September 17, 2026,** at **2:00 PM**. No bids shall be received after the time designated in the bid advertisement. No extensions or exceptions will be made.

The Business Office is opened Monday through Friday from 9:00 am – 4:00 pm according to the school calendar and 9:00 am – 2:00 pm during the summer. Access to the Business Office may be delayed because of security clearance and/or parking for the Administration Building. Bidders are permitted to submit bids to the School Business Administrator/Board Secretary or his designee prior to the bid opening meeting. It is urged all bidders submit their bids per the below guidelines and recommendations, prior to the advertised bid opening date and time. Once again, bids will not be received after the time designated in the advertisement.

SUBMISSION OF BIDS

All potential bidders are to either 1) send their responses through the US Postal Service certified mail or overnight mail which provides **certification of delivery to the sender** or 2) hand deliver their responses to the below address. Bids must be sealed and submitted via mail or hand delivery up to **2:00 p.m.** on **Thursday, September 17, 2026**, prevailing time, in a sealed envelope and plainly marked **"Contract #25.14 – New Hopkins Gymnasium, and Addition & Alteration to J.F. Tatem Elementary School"** addressed to Mr. Michael Catalano, Business Administrator/Board Secretary, Haddonfield Board of Education, 95 Grove Street, Haddonfield, NJ, 08033.

OPENING OF BIDS—ONLINE LIVE STREAMING

The board of education is aware of N.J.S.A. 18A:18A-21 which states the following:

At such time and place the purchasing agent of the board of education shall publicly receive the bids and thereupon immediately proceed to unseal them and publicly announce the contents, which announcement shall be made in the presence of any parties bidding or their agents who are then and there present.

Please note that the bid opening process will begin on the above advertised date at **2:00 p.m.** All attendees shall report to the Board of Education Offices and will be escorted to a meeting space by the Owner. Bids may also be submitted to the School Business Administrator/Board Secretary, Mr. Michael Catalano, or his designee at the bid opening meeting, prior to the advertised date and time. On the advertised date and time, the School Business Administrator shall publicly receive and open all bids and announce the names of the vendors and their prices. Bids may be viewed by interested parties on the advertised bid date and time.

All bids must be submitted on the **bid form** included in the specifications or be subject to rejection.

Bids will be awarded on the basis of the lowest total bidder. All bid prices shall remain firm for a period extending sixty (60) days from the indicated submission date of the opening.

Sealed bids are being solicited through a fair and open process in accordance with N.J.S.A. 19:44a-20.5 et seq.

The Board of Education reserves the right to reject any and/or all bids and to waive any informalities in the bids if that is in the best interest of the school district.

All bids are to be submitted in triplicate; one (1) original; one (1) copy and one (1) copy of the bid on a USB flash drive in a sealed labeled envelope.

HADDONFIELD BOARD OF EDUCATION

BID CHECKLIST (A)

A. Bid packages must be submitted in duplicate on the proposed forms as provided, and in the manner designated. The Board of Education will accept one original bid package, one hard copy and one copy on a USB flash drive of the bid package. Please include all items, organized as follows:

Please include all items, organized as follows:

- ☐ Bid Form
- ☐ Non-Collusion Affidavit
- ☐ Bid Bond
- ☐ Consent of Surety
- ☐ Stockholder/Partnership Disclosure and Statement of Ownership Form
- ☐ Equipment Certification Form
- ☐ Contractor Certification Form
- ☐ Subcontractors Disclosure Statement
- ☐ Prevailing Wage Certification Form
- ☐ Political Contributions Disclosure Form
- ☐ Disclosure of Investment in Iran Form
- ☐ Affirmative Action Compliance Notice Form
- ☐ Exhibit B Form
- ☐ Appendix A Form
- ☐ Total Amount of Uncompleted Contracts Form (Bidder and Subcontractors)
- ☐ Statement of No Material Change Form
- ☐ Notice of DPMC Classification
- ☐ Business Registration Certificate
- ☐ Contractor Registration Act Certificate
- ☐ Certificate of Authority
- ☐ Acknowledgement of Addenda/Clarifications
- ☐ Byrd Act Certification Form

For all named subcontractors the following must also be included:

- ☐ Contractor's Registration Certificate
- ☐ New Jersey Business Registration Certificate
- ☐ Political Contribution Disclosure Form
- ☐ Notice of DPMC Classification
- ☐ Total Amount of Uncompleted Contracts – Certified
- ☐ Statement of No Material Change Form

Failure to submit the above listed documents with the bid package may be cause for rejection of the entire bid for being non-responsive (N.J.S.A. 18A:18A:2(y)).

HADDONFIELD BOARD OF EDUCATION

BID CHECKLIST (B)

B. Reminder Checklist

As a courtesy, the Office of the School Business Administrator/Board Secretary has prepared this reminder checklist to items pertaining to this bid. The checklist is not considered to be all-inclusive. Bidders are to read and become familiar with all instructions outlined in the bid package.

Item	Yes	No
1. Have you verified your pricing to ensure accuracy?		
2. Have you answered every question fully and accurately?		
3. Have you signed all your documents (**blue ink**)? No facsimile signature.		
4. Have you prepared all documents for submission?		
5. Did you make a copy of the bid package for your records?		
6. Did you make a duplicate copy of the bid for the Board of Education as well as include the bid on a USB Flash Drive?		
7. Did you submit a signed Bid Guarantee? Signed Consent of Surety?		
8. Did you correctly address the envelope?		
9. Have you allowed ample time for the bid to reach the Business Office?		

HADDONFIELD BOARD OF EDUCATION

GENERAL SPECIFICATIONS

Michael Catalano
Business Administrator/Board Secretary

HADDONFIELD BOARD OF EDUCATION

New Hopkins Gymnasium and Addition & Alteration to J.F. Tatem Elementary School

INSTRUCTIONS TO BIDDERS

1. CONFIDENTIALITY OF ELECTRONIC FILE TRANSMISSIONS

The Drawings, renderings, photographs, blueprints, specifications, and bidding documents are considered proprietary and confidential property of the Haddonfield Board of Education. All electronic file transfers of this information to the bidders and/or contractors is specifically designated as "confidential" and "business proprietary," the receiving party shall keep such information strictly confidential and shall not disclose it to any other person except to (1) its employees, (2) those who need to know the content of such information in order to perform services or construction solely and exclusively for the Project, or (3) its consultants, contractors and subcontractors whose contracts include similar restrictions on the use of such confidential and proprietary information. The information transmitted in the bidding documents relates to a school construction project and the security and confidentiality of those documents is critical to the health and safety of the children. Therefore, any bidder and/or contractor and/or subcontractor discovered to have published or disseminated this information in the public domain, unless pursuant to the exceptions stated above, shall be subject to significant penalty and may not be permitted to bid on the instant project.

As a condition precedent to receipt of the Bid Documents, all bidders must agree to dispose of, destroy and/or return the information forwarded to it within three (3) days of the Bid submission date.

2. BIDS ARE TO BE SUBMITTED TO: **Michael Catalano**
Business Administrator/Board Secretary
Haddonfield Board of Education
95 Grove Street
Haddonfield, New Jersey 08033

BY: **2:00 p.m.** PREVAILING TIME ON: **September 17, 2026**

by mail, delivery service or in person. Bids that are submitted are to be sealed and will be unsealed and announced at the bid opening meeting.

3. **Bid Packages to be Submitted in Duplicate**. Bids must be placed in a *sealed* envelope/package marked as shown below on the front of the envelope/package. Bid packages must be submitted **in duplicate** on the proposed bid submittal forms as provided, and in the manner designated. The Board of Education requires one original bid package, one duplicate copy of the bid package and one USB Flash Drive of the bid. The extra copies are necessary for processing of the bids. Bidders should also keep a complete copy of the bid packet, exactly as submitted.

Envelope Label Information:

District:	**Haddonfield Board of Education**
Contract No.:	**25.14**
Project:	**New Hopkins Gymnasium, and Addition & Alterations to J.F. Tatem Elementary School**
Bid Date:	**September 17, 2026**
Bid Time:	**2:00 p.m.**
Bidder:	*Name of Company* *Address* *City, State Zip*

Failure to properly label the bid envelope may be cause for the rejection of the bid.

The Board of Education does not accept electronic (e-mail) submission of bids.

4. BID OPENING MEETING

All bids will be publicly received and unsealed by the School Business Administrator opened at the above address and read beginning at **2:00 p.m.** on **September 17, 2026.** Bidders and/or their authorized agents, and the general public are invited to be present for the bid opening, which will be held at the Haddonfield Board of Education Offices. It is the responsibility of each bidder to ensure that their bid is complete and presented to the School Business Administrator/Board Secretary prior to the advertised bid date and time. No bids received after the advertised bid date and time shall be considered by the Board of Education. (N.J.S.A. 18A:18A:21(b))

BIDDING REQUIREMENTS

5. **AFFIRMATIVE ACTION REQUIREMENTS**

Pursuant to N.J.A.C. 17:27-3.6 (a) (1) after notification of award, but prior to signing a construction contract, the contractor shall submit to the Public Agency Compliance Officer and the Division of Contract Compliance an initial project workforce report (Form AA-201) provided to the public agency by the Division for distribution to and completion by the contractor, in accordance with N.J.A.C.17:27-7.

All bidders should familiarize themselves with N.J.S.A. 10:5-31 et seq. and N.J.A.C. 17:27 et seq. MANDATORY AFFIRMATIVE ACTION LANGUAGE CONSTRUCTION CONTRACTS, if awarded a contract, your company/firm will be required to comply with the above requirements.

All relevant questions should be related to:

Division of Contract Compliance/EEO
Department of the Treasury / P.O. 209
Trenton, New Jersey 08625-0209
(609) 292-5473

6. **AMERICAN GOODS**

In accordance with N.J.S.A. 18A:18A-20, only manufactured products of the United States, wherever available, and where possible are to be used with this project.

7. **AMERICANS WITH DISABILITIES ACT**

The contractor must comply with all provisions of the Americans with Disabilities Act (ADA), P.L 101-336, in accordance with 42 U.S.C. S121 01 et seq.

8. **ANTI-BULLYING BILL OF RIGHTS — REPORTING OF HARASSMENT, INTIMIDATION AND BULLYING — CONTRACTED SERVICE**

The contracted service provider shall comply with all applicable provisions of the New Jersey Anti-Bullying Bill of Rights Act—N.J.S.A. 18A:37-13.1 et seq., all applicable code and regulations, and the Anti-Bullying Policy of the Board of Education. The district shall provide to the contracted service provider a copy of the board's Anti-Bullying Policy.

In accordance with N.J.A.C. 6A:16-7.7 ©, a contracted service provider, who has witnessed, or has reliable information that a student has been subject to harassment, intimidation, or bullying shall immediately report the incident to any school administrator or safe schools resource officer, or the School Business Administrator/Board Secretary.

9. **ANTI-DISCRIMINATION PROVISIONS—N.J.S.A. 10:2-1**

N.J.S.A. 10:2-1. Antidiscrimination provisions. Every contract for or on behalf of the State or any county or municipality or other political subdivision of the State, or any agency of or authority created by any of the foregoing, for the construction, alteration or repair of any public building or public work or for the acquisition of materials, equipment, supplies or services shall contain provisions by which the contractor agrees that:

271. In the hiring of persons for the performance of work under this contract or any subcontract hereunder, or for the procurement, manufacture, assembling or furnishing of any such materials, equipment, supplies or services to be acquired under this contract, no contractor, nor any person acting on behalf of such contractor or subcontractor, shall, by reason of race, creed, color, national origin, ancestry, marital status, gender identity or expression, affectional or sexual orientation or sex, discriminate against any person who is qualified and available to perform the work to which the employment relates;

b. No contractor, subcontractor, nor any person on his behalf shall, in any manner, discriminate against or intimidate any employee engaged in the performance of work under this contract or any subcontract hereunder, or engaged in the procurement, manufacture, assembling or furnishing of any such materials, equipment, supplies or services to be acquired under such contract, on account of race, creed, color, national origin, ancestry, marital status, gender identity or expression, affectional or sexual orientation or sex;

c. There may be deducted from the amount payable to the contractor by the contracting public agency, under this contract, a penalty of $50.00 for each person for each calendar day during which such person is discriminated against or intimidated in violation of the provisions of the contract; and

d. This contract may be canceled or terminated by the contracting public agency, and all money due or to become due hereunder may be forfeited, for any violation of this section of the contract occurring after notice to the contractor from the contracting public agency of any prior violation of this section of the contract.

No provision in this section shall be construed to prevent a board of education from designating that a contract, subcontract or other means of procurement of goods, services, equipment or construction shall be awarded to a small business enterprise, minority business enterprise or a women's business enterprise pursuant to P.L.1985, c.490 (C.18A:18A-51 et seq.).

10. **ALTERNATIVE DISPUTE RESOLUTION PROCESS**

All disputes relating to construction contracts or relating to contracts for engineers or architects, surveyors, design or skilled services relating to construction contracts for prompt payment issues shall be submitted to the following Alternative Dispute Resolution process ("ADR"):

All disputes shall first be submitted to the architect of record, if there is one, for a determination. If thirty (30) days pass without a determination by the architect or a determination is made that does not resolve the dispute, then the claims shall be submitted for non-binding mediation by a single mediator.

The mediation shall be held where the project is located before a mediator who is mutually acceptable to the parties. The parties shall share the mediator's fees equally. If the dispute is submitted for mediation the neutral party involved must demonstrate knowledge of the Public School Contracts Law.

Nothing shall prevent either party from seeking injunctive or declaratory relief in a court of law at any time. The alternative dispute resolution practices required by this section shall not apply to disputes concerning the bid solicitation process, or to the formation of contracts.

The Bidder further agrees to include an identical provision in all agreements with independent contracts and consultants retained for the project and to require all independent contractors to include similar mediation

provisions in all agreements with subcontractors, suppliers or fabricators so retained, thereby providing for mediation as the primary method for dispute resolution between the parties to those agreements. The arbitration of claims is expressly excluded under this Contract.

If the parties cannot resolve their dispute through the mediation process, the parties are free to file an action in Camden County Superior Court of New Jersey.

11. **BID GUARANTEE** (N.J.S.A. 18A:18A-24)

Bidders shall submit with their bid package a bid guarantee made payable to the Haddonfield Board of Education ("Board"). The guarantee shall be in the form of a certified check, cashier's check or bid bond in the amount of 10% of the bid, but not in excess of $20,000. Such deposit shall be forfeited upon refusal of a bidder to execute a contract. Any bid in the form of a check shall be returned when the contract is executed and surety (performance) bond filed with the Board of Education. The bid guarantee check for unsuccessful bidders, if requested, will be returned as soon after the bid opening as possible, but in no event later than (10) days after the bid opening.

Please note: *Uncertified business checks, personal checks or money orders are not acceptable*.
All bid bonds submitted must be signed and witnessed with original signatures. The Board will not accept facsimile or rubber stamp signatures on the bid bond**. Failure to sign the bid bond by either the Surety or Principal shall be deemed cause for disqualification of the bid.**

The Attorney-in-Fact who executes the bond on behalf of the surety shall affix to the bond a certified and current copy of the Power of Attorney. The Board of Education will only accept bid bonds from companies that are licensed and qualified to do business in the State of New Jersey. Such a list may be available upon request to the State of New Jersey, Department of Banking and Insurance, P.O. 325, Trenton, New Jersey 08625. **Failure to submit a bid guarantee shall be cause for disqualification and rejection of bid.**

Please note: The name, address and phone number of the Bond Underwriter as well as the Bond Number shall be included with all bonds submitted to the Board of Education.

12. **BID PROPOSAL FORM**

All bids are to be written in by typewriter or ink in a legible manner on the official Bid Proposal Form. Any bid price showing any erasure or alteration must be initialed by the bidder in ink, at the right margin next to the altered entry. Failure to initial any erasure or alteration may be cause to disqualify that particular bid entry. If the disqualified entry is a required one, the entire bid may be subject to rejection, so please fill out all entries with care.

The Bid Proposal Form must be duly signed by the authorized representative of the company, at the end of the Bid Proposal Form. **Failure to sign the Bid Proposal Form may be cause to disqualify the entire bid.** If the Bid Proposal Form contains more than one sheet, then bidders are requested to affix the company name and address on each intervening sheet between the front sheet and the signature sheet which already bear the company information. The Board of Education will not consider any bid on which there is any alteration to, or departure from, the bid specifications. Bidders are not to make any changes on the Bid Proposal Form or qualify their bid with conditions differing from those defined in the contract documents. If bidders do make changes on the Bid Proposal Form, except as noted above for initialed clerical mistakes, it may be cause to disqualify that particular bid as non-responsive. (N.J.S.A. 18A:18A-2(y))

The bidder also conveys by submitting a bid that the company he represents is financially solvent, experienced in and competent to perform the type of work so specified.

13. **BIDDER'S RESPONSIBILITY FOR BID SUBMITTAL**

It is the responsibility of the bidder to ensure that their bid is presented to the Board of Education and officially received before the advertised date and time of the bid. It is understood and agreed upon that any person in the Board of Education will be absolved from responsibility for the premature opening of any bid not properly labeled and sealed. Failure to properly label the bid envelope may be cause for the rejection of the bid.

14. **BUSINESS REGISTRATION CERTIFICATE (**N.J.S.A. 52:32-44**)**

Pursuant to N.J.S.A. 52:32-44 as amended, all bidders or companies providing responses for requested proposals, shall submit with their response package a copy of their "New Jersey Business Registration Certificate" as issued by the Department of Treasury of the State of New Jersey.

The Haddonfield Board of Education requests that all respondents for this bid/proposal submit a current New Jersey Business Registration Certificate with the bid/proposal.

Failure to provide the New Jersey Business Registration Certification prior to the award of contract, will be cause for the rejection of the entire bid or proposal.

Goods, Services and Construction Contracts

N.J.S.A. 52:32-44 imposes the following requirements on contractors and all subcontractors:

A contractor shall provide the contracting agency with the business registration of the contractor and that of any named subcontractor prior to the time a contract, purchase order, or other contracting document is awarded or authorized. At the sole option of the contracting agency, the requirement that a contractor provide proof of business registration may be fulfilled by the contractor providing the contracting agency sufficient information for the contracting agency to verify proof of registration of the contractor, or named subcontractors, through a computerized system maintained by the State.

A subcontractor named in a bid or other proposal made by a contractor to a contracting agency shall provide a copy of its business registration to any contractor who shall provide it to the contracting agency pursuant to the provisions of subsection b. of this section. No contract with a subcontractor shall be entered into by any contractor under any contract with a contracting agency unless the subcontractor first provides the contractor with proof of a valid business registration. For bids and requests for proposals, the contracting agency must retain the proof of business registration in the file where documents relating to the contract are maintained. For all other contracts, proofs of business registration shall be maintained in an alphabetical file.

The contractor shall maintain and submit to the contracting agency a list of subcontractors and their addresses that may be updated from time to time during the course of the contract performance. A complete and accurate list shall be submitted before final payment is made for goods provided or services rendered or for construction of a construction project under the contract. A contracting agency shall not be responsible for a contractor's failure to comply with this subsection.

A contractor or a contractor with a subcontractor that has entered into a contract with a contracting agency, and each of their affiliates, shall collect and remit to the Director of the Division of Taxation in the Department of the Treasury the use tax due pursuant to the "Sales and Use Tax Act," P.L.1966, c.30 (C.54:32B-1 et seq.) on all their taxable sales of tangible personal property delivered into this State.

STATE OF NEW JERSEY
BUSINESS REGISTRATION CERTIFICATE
FOR STATE AGENCY AND CASINO SERVICE CONTRACTORS

DEPARTMENT OF TREASURY
DIVISION OF REVENUE
PO BOX 252
TRENTON, N J 08646-0252

TAXPAYER NAME:
TAX REGISTRATION TEST ACCOUNT
TAXPAYER IDENTIFICATION#:
970-097-382/500
ADDRESS:
847 ROEBLING AVE
TRENTON NJ 08611
EFFECTIVE DATE:
01/01/01
FORM-BRC(08-01)

TRADE NAME:
CLIENT REGISTRATION
SEQUENCE NUMBER:
0107350
ISSUANCE DATE:
07/14/04

Acting Director

This Certificate is NOT assignable or transferable. It must be conspicuously displayed at above address.

SAMPLE

STATE OF NEW JERSEY
BUSINESS REGISTRATION CERTIFICATE

Taxpayer Name:	TAX REG TEST ACCOUNT
Trade Name:	
Address:	847 ROEBLING AVE TRENTON, NJ 08611
Certificate Number:	1093907
Date of Issuance:	October 14, 2004

For Office Use Only:

20041014112823533

SAMPLES OF NEW JERSEY BUSINESS REGISTRATION CERTIFICATES

All respondents are urged to submit with their response, a copy of their firm's New Jersey Business Registration Certificate. Failure to submit the Certificate prior to the award of contract will result in the rejection of the proposal.

15. **CERTIFICATE FROM SURETY COMPANY** (N.J.S.A. 18A:18A-25)

Each bidder must submit with his bid a certificate from a surety company stating that the surety company will provide the contractor with a performance bond in an amount equal to the amount of the contract (N.J.S.A. 18A: 18A-25). Such surety company must be licensed and qualified to do business in the State of New Jersey. All certificate (consent) of surety documents must be signed with original signatures.

The Board will not accept facsimile or rubberstamp signatures. The certificate (consent) of surety, together with a power of attorney must be submitted with the bid.

Failure to submit or failure to sign the certificate (consent) of surety shall be cause for disqualification and rejection of bid.

16. **CHALLENGES TO BID SPECIFICATIONS** (N.J.S.A. 18A:18A-15)

Any prospective bidder who wishes to challenge a bid specification shall file such challenges in writing with the School Business Administrator/Board Secretary no less than three (3) days prior to the opening of bids. **Challenges filed after that date shall be considered void and having no impact on the Board of Education or the award of a contract.**

17. **CHANGE ORDERS (N.J.A.C. 6A:26-4.9, 4.10 et seq.) (N.J.A.C. 5:30-11.1 et seq.)**

Board of Education Approval Required; Prior to Issuance of Change Order (N.J.A.C. 5:30-11.2)

Change orders may be approved by the Board of Education in an amount up to twenty percent (20%) when necessitated by one of the following:

- Emergencies consistent with N.J.S.A. 18A:18A-7;
- Unforeseeable physical conditions; or
- Minor modification to the project/scope that achieve cost savings, improve service or resolve construction conditions.

Division of Finance (NJDOE) Approval

All other change orders shall be approved by the Division of Finance (NJDOE) when extraordinary circumstances exist such as:

- Change order amounts greater than twenty percent (20%);
- Change orders that eliminate or affect the project scope; or
- Change orders that affect the number, size, configuration, location or use of educational spaces.

Contractors are prohibited to perform any change order unless so directed in writing by the Board of Education.

18. **CONTRACTS**

A. Award of Contract; Rejection of Bid

The contract shall be awarded, if at all, to the lowest responsible bidder as determined by the Board of Education, pursuant to N.J.S.A. 18A:18A-18 ©, 18A:18A-2(s), (t), (x), (y), 18A:18A-4(a), 18A:18A-22. The Board of Education reserves the right to reject any or all bids as authorized by the Public School Contracts Law, and to waive any nonmaterial defects and/or informalities the Board feels are in the best interests of the Board. Pursuant to N.J.S.A. 18A:18A- 36 (a), the Board of Education shall award the contract or reject all bids within sixty (60) days of the advertised date and time noting the exception highlighted in the law. Contractors will be required to execute a form of contract similar to attached AIA A-101-2017 and General Terms and Conditions, AIA 201-2017.

271. Equal Prices

Pursuant to N.J.S.A. 18A:18A-37(d) when two or more bidders submit equal prices and the prices are the lowest responsible bids, the Board may award the contract to the vendor whose response, in the discretion of the Board, is the most advantageous, price and other factors considered.

271. Return of Contracts and Related Contract Documents

Upon written notification of award of contract by the Board of Education, the contractor shall sign and execute a formal contract agreement between Board of Education and Contractor and return the executed contracts along with:

1. Performance Bond in the total amount of the contract.
2. Insurance Certificate with the Board of Education named as an additional insured.
3. Affirmative Action Form AA-201 – Initial Project Workforce Report – Yellow copy.
4. Other required documents as may be outlined in bid specifications.

The above documents may also be required for submission with the official Notice to Proceed. The contracts and related documents shall be returned to the Office of the School Business Administrator/Board Secretary within **ten (10) days of receipt of notification**. Failure to execute the contract and return said contract and related required documents within the prescribed time may be cause for the annulment of award by the Board with the bid security becoming property of the Board of Education.

D. Alterations of Contract

The Board of Education reserves the right to alter or amend the contract by adding to or subtracting from the work herein specified, such additions or omissions being done under the general conditions of these specifications and the terms of the Contract. No changes shall be permitted from the specifications except that the same be in writing and the amount of the extra compensation or credit stipulated therein. Refer to Change Order Section #15.

E. Term of Contract

The contractor, to whom the contract is awarded, will be required to do and perform the work/services and to provide and furnish the materials in connection therewith in accordance with the plans and specifications on or before the date listed in the Technical Specifications.

F. Purchase Order Required

No contractor shall commence any public works project until he is in receipt of an approved purchase order authorizing work to begin. (See Notice (Authorization) to Proceed)

19. CONTRACTOR'S REGISTRATION EVIDENCE

271. Valid Certificate – Receipt of Bid

All contractors must adhere to the provisions of the Public Works Contractor Registration Act – N.J.S.A. 34:11-56.48 et seq. The PWCRA requires that *"No contractor shall bid on any contract for public work . . . unless the contractor is registered pursuant to this act."* The law requires that all contractors and sub-contractors named in the proposal possess a valid certificate at the time the proposal is received by the contracting unit, in this case the Board of Education.

B. Submission of Certificate – Receipt of Bid; Prior to Award

All bidders shall submit with the bid package or prior to the award of contract, a current Public Works Contractor Registration Certificate that was issued prior to the receipt of the bid.

The contractor who most likely is to be considered for the contract award, must submit a copy of the current Public Works Contractor Registration Certificate, and if applicable, copies of certifications of all listed subcontractors, prior to the award of contract. If the contractor fails to provide copies of certificates prior to the award of contract, the bid may be rejected as non-responsive.

For more information contact:

Contractor Registration Unit
Division of Wage and Hour Compliance
New Jersey Department of Labor & Workforce Development
PO Box 389
Trenton, New Jersey 08625-0389
Tel: 609-292-9464
Fax: 609-633-8591
E-mail: contreg@dol.state.nj.us
Web site: www.nj.gov/labor/lsse/lspubcon.html

20. CONTRACTOR/VENDOR REQUIREMENTS—OFFICE OF THE NEW JERSEY STATE COMPTROLLER

Contractors/vendors doing business with the board of education are reminded of the following legal requirements pertaining to the Office of the New Jersey State Comptroller:

A. Access to Relevant Documents and Information—N.J.S.A. 52:15C-14 (d)

Private vendors or other persons contracting with or receiving funds from a unit in the Executive branch of State government, including an entity exercising executive branch authority, independent State authority, public

institution of higher education, or unit of local government or board of education shall upon request by the State Comptroller provide the State Comptroller with prompt access to all relevant documents and information as a condition of the contract and receipt of public monies. The State Comptroller shall not disclose any document or information to which access is provided that is confidential or proprietary. If the State Comptroller finds that any person receiving funds from a unit in the Executive branch of State government, including an entity exercising executive branch authority, independent State authority, public institution of higher education, or unit of local government or board of education refuses to provide information upon the request of the State Comptroller, or otherwise impedes or fails to cooperate with any audit or performance review, the State Comptroller may recommend to the contracting unit that the person be subject to termination of their contract, or temporarily or permanently debarred from contracting with the contracting unit.

B. **Maintenance of Contract Records**—N.J.A.C. 17:44-2.2

Relevant records of private vendors or other persons entering into contracts with covered entities are subject to audit or review by OSC pursuant to N.J.S.A. 52:15C-14(d).

The contractor/vendor to whom a contract has been awarded, shall maintain all documentation related to products, transactions or services under this contract for a period of five years from the date of final payment. Such records shall be made available to the New Jersey Office of the State Comptroller upon request.

21. **CRIMINAL HISTORY BACKGROUND CHECKS–REQUIRED**

STUDENT AND FACULTY SAFETY REQUIREMENTS: During the performance of this contract, neither the Contractor nor any Subcontractor, where applicable, shall knowingly allow any employee registered pursuant to NJSA 2C:7-1, et seq "Megan's Law" as a Tier 3 offender ("sex offenders determined to pose a relatively high risk of re-offense") or a Tier 2 offender ("sex offenders determined to pose a moderate risk of re-offense"), upon the Owner's property or the Project site. Accordingly, the Contractor will be required, at no additional cost to the Owner, to have all on-site Contractor or Subcontractor employees, screened via an Owner Provided Visitor Management screening and badging system (LobbyGuard, T-Pass or approved equal) in order to conduct security checks on its employees and subcontractors and to ensure compliance with these Student and Faculty Safety Requirements. All employees of the Contractor and any Subcontractor, where applicable, will be required to wear picture identification cards in a visible manner while working on the Owner's premises. During the performance of this contract, neither the Contractor nor any Subcontractor, where applicable, shall knowingly allow any employee to enter any area of the Project where students or faculty are present, without first providing the Owner with a written list setting forth the identity of the employees.

1. The successful Bidder will be expected after contract award to comply with and complete all required forms, written authorizations and/or other information issued by the District for the disclosure of information in accordance with the mandates of N.J.S.A. 18A:6-7.7 et seq. which concerns prior acts and/or investigations of sexual misconduct and/or child abuse for those contracted service providers who are employed in positions which involve regular contact with students. The successful Bidder is further notified that failure to provide truthful information or willfully failing to disclose information required by N.J.S.A. 18A:6-7.7 et seq., may subject the successful Bidder to discipline up to, and including, termination or denial of employment; may be a violation of N.J.S.A. 2C:28-3; and may be subject to a civil penalty of not more than $500, which shall be collected in proceedings in accordance with the "Penalty Enforcement Law of 1999," P.L. 1999, c. 274.

22. **DEBARMENT, SUSPENSION, OR DISQUALIFICATION** – (N.J.A.C. 17:19-4.1)

The Board of Education will not enter into a contract for work with any person, company or firm that is on the State Department of Labor and Workforce Development; Prevailing Wage Debarment List, or the State of New Jersey Consolidated Debarment Report (www.state.nj.us/treasury/debarred) or the Federal System for Award—SAM.gov.

All bidders are required to submit a sworn statement indicating whether or not the bidder is, at the time of the bid, included on the State Department of Labor and Workforce Development; Prevailing Wage Debarment List or the State of New Jersey Consolidated Debarment Report, or the Federal Debarred Vendor List–Excluded Parties List System, through the System for Award Management portal—SAM.gov.

23. **FEDERAL NON-DEBARMENT CERTIFICATION – (N.J.S.A. 52:32-44.1 (P.L. 2019, c. 406)**

Pursuant to state law any natural person, company, firm, association, corporation, or other entity prohibited, or "debarred," from contracting with the federal government agencies, shall also be prohibited from contracting for public work in the state of New Jersey. This prohibition also extends to any affiliate organization(s) held by or subject to the control of an entity of that prohibited person or entity.

Bidders are reminded that they must complete the attached Certification of Non-Debarment for Federal Government Contracts Form including all information in the certification sections of Parts II through IV regarding their name and type of contracting unit.

24. **DOCUMENTS, MISSING/ILLEGIBLE**

The bidder shall familiarize himself with all forms provided by the Board that are to be returned with the bid. If there are any forms either missing or illegible, it is the responsibility of the bidder to contact the School Business Administrator/Board Secretary during regular business hours or the architect of the project as outlined in the bid advertisement for duplicate copies of the forms. This must be done before the bid date and time. The Board accepts no responsibility for duplicate forms that were not received by the bidder in time for the bidder to submit with his bid.

*****Forms provided by the Board of Education that must be returned with bid are referenced in the proceeding checklist.

25. **DOCUMENT SIGNATURES – ORIGINAL; BLUE INK**

All documents returned to the Board shall be signed in ink (blue) with an original signature. Failure to sign and return all required documents with the bid package may be cause for disqualification and for the bid to be rejected pursuant to N.J.S.A. 18A:18A-2(y) (non-responsive). The Board will not accept facsimile or rubber stamp signatures.

Checklist of Required Documents (Forms Provided in Bid Package)

- ☐ **Acknowledgement of Addenda**
- ☐ Bid Proposal Form
- ☐ Byrd Certification Form
- ☐ Chapter 271 Political Disclosure Form
- ☐ Contractor Questionnaire/Certification
- ☐ Contractor's Registration Certifications
- ☐ Equipment Certification
- ☐ Iran Disclosure of Investment Activities
- ☐ Non-Collusion Affidavit
- ☐ Prequalification Affidavit
- ☐ Prevailing Wages Certification
- ☐ Stockholder's/Partnership Disclosure Affidavit/Ownership Declaration
- ☐ Subcontractor's Disclosure Statement

Please check your bid package for these forms!

Reminder – Original Bid and One Copy of Bid Package and One USB Flash Drive

Bid packages are to be submitted in duplicate on the proposed forms as provided and the manner designated. The Board of Education will accept one original bid package, one copy of the bid package and one USB Flash Drive.

27. **EQUIPMENT CERTIFICATION** (N.J.S.A. 18A:18A-23)

Each bidder shall provide a certification showing that he owns, leases or controls all the necessary equipment required by the specifications. If the bidder is not the actual owner or lessee of any such equipment, he shall submit a certificate stating the source from which the equipment will be obtained and shall obtain a certificate from the owner and person in control of the equipment, definitely granting to the bidder the control of the equipment required during such time as may be necessary for the completion of that portion of the contract for which it is necessary.

The certificates are to be submitted with the bid. If the contract involves the installation of a manufactured system which requires the contractor to have special knowledge or training, or to be specifically certified by the manufacturer to install their system, this form is used to submit such required evidence of the bidder's approval from the manufacturer.

28. **EXAMINATION OF SPECIFICATIONS, ACKNOWLEDGEMENT**

The bidder, by submitting a proposal, acknowledges that he has carefully examined the bid specifications, documents, addenda (if any), and the site; and that from his investigation, he has satisfied himself as to the nature and location of the work, the general and local conditions and all matters which may in any way affect the work or its performance, and that as a result of such examination, he fully understands the intent and purpose thereof, his obligations thereunder, and that he will not make any claim for, or have any right to damages, because of the lack of any information.

Each bidder submitting a bid for a service contract shall include in his bid price all labor, materials, equipment, services, and other requirements necessary, or incidental to, the completion of the work, and other pertinent work as hereinafter described, or work that can be reasonably inferred from the specifications and documents, in accordance with the bid specifications and documents.

29. **FALSE MATERIAL REPRESENTATION** – (N.J.S.A. 2C:21-34-97(b))

A person commits a crime if the person knowingly makes a material representation that is false in connection with the negotiation, award or performance of a government contract. If the contract amount is for $25,000.00 or above, the offender is guilty of a crime of the second degree. If the contract amount exceeds $2,500.00, but is less than $25,000.00, the offender is guilty of a crime of the third degree. If the contract amount is for $2,500.00 or less, the offender is guilty of a crime of the fourth degree.

30. **FORCE MAJEURE**

Neither party shall be liable in damages for any failure, hindrance or delay in the performance of any obligation under this Agreement if such delay, hindrance or failure to perform is caused by conditions beyond the control of either party, including, but not limited to, Acts of God, flood, fire, war or the public enemy, explosion, government regulations whether or not valid (including the denial or cancellation of any export or other necessary license), court order, state funding, or other unavoidable causes beyond the reasonable control of the party whose performance is affected which cannot be overcome by due diligence.

Vendors, and/or contractors who have a contract with the Board of Education to provide goods or services cannot unilaterally claim an increase in the cost of the contract because of Force Majeure.

31. **INSURANCE AND INDEMNIFICATION**

The bidder to whom the contract is awarded for any service work or construction work shall secure, pay the premiums for and keep in force until the contract expires, insurance of the types and amounts listed below:

.1 Commercial General Liability, Each Occurrence

a.	Each Occurrence:	$ 1,000,000.00
b.	Damage to Rented Premises:	$ 300,000.00
c.	Medical Expense (Any one person):	$ 15,000.00
d.	Personal & Adv Injury:	$ 1,000,000.00
e.	General Aggregate:	$ 2,000,000.00
f.	Products – Comp/Op Agg:	$ 1,000,000.00

.2 Excess Umbrella Liability: $ 5,000,000.00

.3 Automobile Liability: (Hired autos, scheduled autos, non-owned autos)

a. Combined Single Limit (each accident): $ 1,000,000.00

.4 Workers Compensation and Employers Liability:

a. WC Statutory Limits:

1.	E.L. Each Accident:	$ 1,000,000.00
2.	E.L. Disease – Each Employee:	$ 1,000,000.00
3.	E.L. Disease – Policy Limit:	$ 1,000,000.00

.5 Builder's Risk Insurance: The Contractor shall provide Builder's Risk Insurance for all risk of physical loss or damage to the property described hereunder in an amount equal to the Total Project Value, and furnished under Construction Contracts for the School Facilities Project; excepting excavations, foundations and other structures customarily excluded by such insurance. The Policy shall name the Owner, State of New Jersey, the New Jersey Department of Education, New Jersey Schools Development Authority, and the New Jersey Economic Development Authority as loss payee as their interests may appear on a primary and non-contributory basis. The Builders Risk Policy is to include coverage for the perils of Earthquake, Flood, Full Windstorm, Equipment Breakdown and Theft (excluding employee theft), contain an endorsement allowing permission to occupy and include coverage for both transit and offsite storage. The policy is also to include all contractors, subcontractors and sub-subcontractors as well as the Owner, State of New Jersey, the New Jersey Department of Education, New Jersey Schools Development Authority, and the New Jersey Economic Development Authority, LAN Associates as Additional Named Insureds on a primary and non-contributory basis. The contractor and all subcontractors are responsible for all policy deductibles and uninsured or underinsured losses.

.6 The Policy shall name the following as Additional Insured:

Haddonfield Board of Education; LAN Associates Engineering, Planning, Architecture, Surveying, Inc.; the State of New Jersey; the New Jersey Department of Education; New Jersey Schools Development Authority; and the New Jersey Economic Development Authority as additional insureds on a primary and non-contributory basis

.7 Contractual liability insurance as applicable to the Contractor's obligations under Paragraph 3.18 of the AIA General Conditions.

.8 Workers' Compensation Insurance of not less than statutory limits.

.9 Completed Operations Insurance written to the limits specified for liability insurance specified under subparagraph .1 above. Coverage shall be required from the date of the start of Beneficial Occupancy until one year after the issuance date of Final Certificate for Payment.

.10 Certificates of insurance must be submitted on the ACORD Form, Certificate of Insurance. Contractor's ACORD Certificate of Insurance must state "Contractual Liability Included" or it will be rejected.

.11 The successful bidder shall either

.1 require each of his subcontractors to procure and to maintain during the life of their subcontracts, Subcontractor's Public Liability and Property Damage, of the type and in the same amounts as specified in the preceding paragraph; or

.2 insure the activities of their subcontractors under their respective policies.

Notice of Cancellation or Expiration of Contractor's Required Insurance. Within three (3) business days of the date the Contractor becomes aware of an impending or actual cancellation or expiration of any insurance required by the Contract Documents, the successful bidder shall provide notice to the District of such impending or actual cancellation or expiration.

(B) Indemnification

The contractor shall assume all risk of and responsibility for, and agrees to indemnify, defend, and save harmless the Board and its agents, employees and Board members, from and against any and all claims, demands, suits, actions, recoveries, judgments and costs and expenses (including, but not limited to, attorney's fees) in connection therewith on account of the loss of life or property or injury or damage to any person, body or property of any person or persons whatsoever, which shall arise from or result directly or indirectly from the work and/or materials supplied under this contract or the performance of services by the contractor under the agreement or by a party for the whole contract is liable. This indemnification obligation is not limited by, but is in addition to, the insurance obligations contained in this agreement.

The Contractor is to assume all liability of every sort incident to the work, including property damage caused by him or his men or by any subcontractor employed by him or any of the subcontractor's men.

32. **INTERPRETATIONS AND ADDENDA (**N.J.S.A. 18A:18A-21© (2))

No interpretation of the meaning of the specifications will be made to any bidder orally. Every request for such interpretations should be made in writing to the School Business Administrator/Board Secretary and must be received at least ten (10) business days, not including Saturdays, Sundays and holidays, prior to the date fixed for the opening of bids to be given consideration. Any and all interpretations and any supplemental instructions will be distributed in the form of written addenda to the specifications. The addenda will be provided in accordance with N.J.S.A. 18A:18A-21© (2) to the bidder by certified mail or certified fax no later than seven (7) days, Saturdays, Sundays, or holidays prior to the date for acceptance of the bids. All addenda so issued shall become part of the contract document.

33. **IRAN DISCLOSURE OF INVESTMENT ACTIVITIES-** (N.J.S.A**.** 18A:18A-49.4)

The Haddonfield Board of Education, pursuant to N.J.S.A. 18A:18A-49.4, shall implement and comply with Public Law 2012, c.25, Disclosure of Investment Activities in Iran—N.J.S.A. 52:32-55 et seq.

Pursuant to Public Law 2012, c. 25, any person or entity that submits a bid or proposal or otherwise proposes to enter into or renew a contract, must complete a certification attesting, under penalty of perjury, that neither the person or entity, nor any of its parents, subsidiaries, or affiliates, is identified on the Department of Treasury's Chapter 25 list as a person or entity engaging in investment activities in Iran.

The Chapter 25 list is found on the Divisions website
http://www.state.nj.us/treasury/purchase/pdf/Chapter25List.pdf.

If the Board determines that a person or entity has submitted a false certification concerning its engagement in investment activities in Iran under section 4 of P.L.2012, c.25 (C.52:32-58), the board shall report to the New Jersey Attorney General the name of that person or entity, and the Attorney General shall determine whether to bring a civil action against the person to collect the penalty prescribed in paragraph (1) of subsection a. of section 5 of P.L.2012, c.25 (C.52:32-59).

In addition, bidders must provide a detailed, accurate and precise description of the activities of the bidding person/entity, or one of its parents, subsidiaries or affiliates, engaging in the investment activities in Iran outlined above by completing the boxes on the lower portion of the enclosed form.

The Board has provided within the specifications, a Disclosure of Investments Activities certification form for all persons or entities, that plan to submit a bid, respond to a proposal, or renew a contract with the board, to complete, sign and submit with the proposal.

Failure to complete, sign and submit the Disclosure of Investment Activities in Iran form with the bid/proposal shall be cause for rejection of the proposal.

34. **LIABILITY – COPYRIGHT**

The contractor (vendor) shall hold and save the Board of Education, its officials and employees, harmless from liability of any nature or kind for or on account of the use of any copyrighted or uncopyrighted composition, secret process, patented or unpatented invention, article or appliance furnished or used in the performance of his contract.

35. **LIQUIDATED DAMAGES**

The contractor agrees to substantially complete this public works project to the complete satisfaction of the Board of Education by the stated contract completion date or within the number of working days so specified in the contract.

Failure to complete the project within the specified time frame or contract completion date shall lead to the Board of Education assessing liquidated damages against the contractor in accordance with and pursuant to N.J.S.A. 18A:18A-41 and 18A:18A-19.

For each calendar day thereafter that the work included under this contract remains uncompleted in accordance with the provision of the contract or not completed to the satisfaction of the Board of Education, the Board shall assess liquidated damages in the amount of $2,500.00 per calendar day.

The Board may assess liquidated damages by deducting the amount from monies which may due or become due to the contract.

The Board may also assess the contractor additional damages for costs the Board may incur because each day the project remains uncompleted. These costs include but are not limited to:

- Construction management fees
- Architect/engineer fees
- Legal Fees
- District administrative costs
- Any inspector or inspectors necessarily employed by the Board of Education on the work, for any number of days in excess of the number allowed in the specifications

The Board of Education may also assess against all monies owed to the contractor, liquidated damages for the violation of any terms and conditions of the contract or agreement by the contractor or the failure to perform said contract or agreement in accordance with its terms and conditions or the terms or conditions of the "Public School Contracts Law," in accordance with and pursuant to N.J.S.A. 18A:18A-19 and 18A:18A-41.

36. **MAINTENANCE BONDS**

The successful bidder shall furnish a Maintenance Bond for the total sum of the contract price, indemnifying the Board of Education against defects in construction for a period of one (1) years after the completion of the work, general wear and tear excepted.

The condition of this obligation is such that if the successful contractor shall indemnify and hold harmless the Board of Education from and against all losses, costs, damages and expenses, whatsoever, which the Board may suffer or compelled to pay by reason of the failure of the successful contractor to indemnify the Board against defects in construction for a period of one (1) years after the completion of the work.

37. **NON-COLLUSION AFFIDAVIT** (N.J.S.A. 52:34-15)

A notarized Non-Collusion Affidavit shall be submitted with the bid/proposal. The bidder/respondent has to certify that he has not directly or indirectly, entered into any agreement, participated in any collusion, discussed any or all parts of this proposal with any potential bidders, or otherwise taken any action in restraint of free, competitive bidding in connection with the above named bid, and that all statements contained in said Proposal and in this affidavit are true and correct, and made with full knowledge that the Board of Education relies upon the truth of the statements contained in said Proposal and in the statements contained in this affidavit in awarding the contract for the said bid.

The respondent has to further warrant that no person or selling agency has been employed or retained to solicit or secure such contract upon an agreement or understanding for a commission, percentage, brokerage or contingent fee, except bona fide employees of bona fide established commercial or selling agencies maintained by the respondent.

The Haddonfield Board of Education has provided a Non-Collusion Affidavit form here within the specifications package. All respondents are to complete, sign, have the signature notarized and submit the form with the proposal response.

Failure to submit the Non-Collusion Affidavit with the proposal may be cause for the disqualification of the proposal.

38. **NOTICE (AUTHORIZATION) TO PROCEED** (N.J.S.A. 18A:18A-36(b))

The contractor shall not perform any work, or provide any services, materials, supplies until a Notice (Authorization) to Proceed is received from the Office of the School Business Administrator/Board Secretary. (N.J.S.A. 18A:18A-36(b)).

The Board of Education only recognizes the receipt by the contractor of an approved signed purchase order as a Notice to Proceed. No word of mouth, phone, fax, e-mail, letter or other form of communication to proceed is a valid Notice to Proceed.

It is the intention of the Board to officially notify the Contractor, to whom the contract was awarded, through a Notice to Proceed letter issued by the School Business Administrator/Board Secretary. A purchase order will accompany the Notice to Proceed letter. The contractor shall submit certain documents to the Board as so requested in the Notice to Proceed letter.

39. **PAYMENTS**

Every effort will be made to pay vendors and contractors within thirty (30) to sixty (60) days provided the Board of Education receives the appropriate documentation including but not limited to:

- □ Signed voucher by vendor
- □ Packing slips
- □ Invoices

Payment will be rendered upon completion of services or delivery of full order to the satisfaction of the Board of Education, unless otherwise agreed to by written contract or mandated by N.J.S.A. 18A:18A-40.1. The Board may, at its discretion make partial payments.

All payments are subject to approval by the Board of Education at a public meeting. Payment may be delayed from time to time depending on the Board of Education meeting schedule.

40. **PAYMENT, PARTIAL, WITHHOLDING**

A. Contract Thresholds; Partial Payments/Withholding

1. Contracts – Less than $100,000 – Lump Sum Payment
   Public works contracts less than $100,000 shall be paid in one lump total sum, upon completion of the project and to the satisfaction of the Board of Education.

2. Contracts – Exceeding $100,000 – Monthly Payments
   Public works contracts that exceed $100,000 shall be paid with partial payments on a monthly basis for work that was completed to the satisfaction of the Board of Education.
   (Ref. N.J.S.A. 18A:18A-40.1)

271. Withholding of Monies – Percentage to be Withheld

The Board of Education shall withhold the following percentages of outstanding balances of monies owed to contractors:

Balances Exceeding $500,000 – Two (2%) Per Cent
Balances Less than $500,000 -- Five (5%) Per Cent

The amounts withheld shall be returned to the contracts upon fulfillment of the terms of the contract. (Ref. N.J.S.A. 18A:18A-40.1)

B. Prompt Payment

The Board of Education will provide payment in accordance with the "Prompt Payment" law as codified in N.J.S.A. 2A:30A-1 et seq. All payments to contractors are subject to approval by the Board of Education at a public meeting.

The Board of Education generally holds its Regular Public Meeting on the 4th Thursday of each month. It is at these meetings that the Board of Education reviews payment of bills.

All bills submitted to the Board for approval and payment pursuant to N.J.S.A. 2A:30A-1 et seq. must comply with the following provisions. The "billing date" shall be the date that the contractor signs the certification on the voucher/purchase order that the work has been performed. These bills include all bills for improvements to real property and contracts for engineers, architects, surveyors, design or skilled services relating to construction work.

Bills that are required to be approved by an engineering or architecture firm (prior to submission to the Board for approval) for purposes of confirmation of successful completion of construction work, shall be approved or disapproved within twenty (20) days of submission of same to the architect or engineer. If bills

are disapproved or monies withheld from payment, the notice of the reason for same shall be given within the same twenty (20) days to the contract.

The Board must approve payment of all bills. For the Board to consider a bill for approval it must be submitted to the School Business Administrator/Board Secretary at least two weeks prior to a scheduled/or re-scheduled Board meeting date. If the Board, or any agent or officer of the Board, determines that the bill is not approved then notice of the disapproval shall be sent to the contractor with five (5) days of the Board meeting on which the bill was listed for approval.

If the bill is approved by the Board, then payment shall be made to the contractor with seven (7) days of the Board meeting as per the "payment cycle."

41. **PERFORMANCE BOND/CONTRACT AMOUNT (N.J.S.A. 2A:44-143/2A:44-147)**

A. The contractor shall furnish a Performance, Payment and Completion Bond in a sum of at least one hundred percent (100%) of the total amount payable by the terms of his Contract. Such written guarantee shall be made payable to the Haddonfield Board of Education and shall be in the form required by Statute. Attached to the performance bond shall be a Surety Disclosure Statement and Certification which shall be complete in all respects and duly acknowledged according to law. A model Surety Disclosure Statement and Certification is presented in the Appendix Section of this proposal.

B. Such bond shall further carry a stipulation that no advance, premature, excessive or delayed payments by the Board shall in any way affect the obligation of the Surety on its bond.

C. Such bond shall further stipulate that no payments made to the contractor, nor partial or entire use of occupancy of the work by the Board shall be an acceptance of any work or materials not in accordance with this Contract and the Surety shall be equally bound to the same extent as the Contractor.

D. It is expressly stipulated that the Surety for the Contractor on the project shall be obligated to make periodic inquiries of the Board at reasonable times, to determine whether its Principal has performed or was performing the Contract in accordance with all of its terms and conditions, particularly in relation to the progress payments scheduled under said Contract with the Board.

E. In the event the Contractor defaults or fails to perform or finish the work prescribed under the Contract for any reason whatsoever, it shall become the unqualified obligation the Surety for the defaulting contractor to complete the Contract in accordance with its terms following receipt of notice from the Board of such default.

F. The Board shall only accept one payment and performance bond to cover this public works contract. The performance bond shall contain language as found in N.J.S.A. 2A:44-14. The bond form language is presented in the Appendix Section of this proposal.

G. Such Performance, Payment and Completion Bond shall be executed and delivered to the Board of Education when so requested by the Notice to Proceed Letter or within ten (10) days after the award of contract.

H. The Board of Education will only accept performance bonds from surety companies that are licensed and qualified to do business in the State of New Jersey, and if the amount of the bond is $850,000 but not more than $3.5 million, the surety shall hold a current certificate of authority, issued by the United States Secretary of the Treasury pursuant to 31 U.S.C. 9305. (N.J.S.A. 2A:44-143 (b))

Please note: The name, address, and phone number of the Bond Underwriter as well as the Bond Number shall be included with all bonds submitted to the Board of Education and must be duly signed with original signatures.

42. **POLITICAL CONTRIBUTIONS DISCLOSURE – REQUIREMENTS**

Annual Disclosure

A business entity as defined by law is advised of its responsibility to file an annual disclosure statement on political contributions with the New Jersey Election Law Enforcement Commission pursuant to N.J.S.A. 19:44A-20.13 (P.L. 2005 Chapter 271 section 3) if the business entity receives contracts in excess of $50,000 from public entities in a calendar year. It is the business entity's responsibility to determine if filing is necessary. Additional information on this requirement is available from the New Jersey Election Law Enforcement commission at 1-888-313-3532 or at www.elec.nj.us.

Chapter 271 Political Contribution Disclosure Form

Business entities (contractors) receiving contracts from a public agency that are NOT awarded pursuant to a "fair and open" process (defined at N.J.S.A. 19:44A-20.7) are subject to the provisions of P.L. 2005, c. 271, s.2 (N.J.S.A. 19:44A-20.26). This law provides that 10 days prior to the award of such a contract, the contractor shall disclose contributions to:

- any State, county, or municipal committee of a political party
- any legislative leadership committee*
- any continuing political committee (a.k.a., political action committee)
- any candidate committee of a candidate for, or holder of, an elective office:
  - of the public entity awarding the contract
  - of that county in which that public entity is located
  - of another public entity within that county
  - or of a legislative district in which that public entity is located or, when the public entity is a county, of any legislative district which includes all or part of the county.

The disclosure must list reportable contributions to any of the committees that exceed $300 per election cycle that were made during the 12 months prior to award of the contract. See N.J.S.A. 19:44A-8 and 19:44A-16 for more details on reportable contributions.

The Haddonfield Board of Education has provided a Chapter 271 Political Contribution Disclosure Form within the specifications package for use by the business entity. The Board has also provided a list of agencies to assist the contractor. The enclosed list of agencies is provided to assist the contractor in identifying those public agencies whose elected official and/or candidate campaign committees are affected by the disclosure requirement. It is the contractor's responsibility to identify the specific committees to which contributions may have been made and need to be disclosed. The disclosed information may exceed the minimum requirement.

The enclosed Chapter 271 Political Contribution Disclosure form, a content-consistent facsimile, or an electronic data file containing the required details (along with a signed cover sheet) may be used as the contractor's submission and is disclosable to the public under the Open Public Records Act.

POLITICAL CONTRIBUTIONS/AWARD OF CONTRACTS

Pursuant to N.J.A.C. 6A:23A-6.3 (a) (1-4) please note the following:

Award of Contract – Reportable Contributions – N.J.A.C. 6A:23A-6.3 (a) (1)
"No board of education will vote upon or award any contract in the amount of $17,500 or greater to any business entity which has made a contribution reportable by the recipient under P.L.1973, c83 (codified at N.J.S.A. 19:44A-1 et seq.) to a member of the board of education during the preceding one-year period.

Contributions During Term of Contract – Prohibited – N.J.A.C. 6A:23A-6.3 (a) (2-3)

"Contributions reportable by the recipient under P.L. 1973, c83 (codified at N.J.S.A. 19:44A-1 et seq.) to any member of the school board from any business entity doing business with the school district are prohibited during the term of the contract."

"When a business entity referred in 4.1© is a natural person, contribution by that person's spouse or child that resides therewith, shall be deemed to be a contribution by the business entity. When a business entity is other than a natural person, a contribution by any person or other business entity having an interest therein shall be deemed to be a contribution by the business entity."

Chapter 271 Political Contribution Disclosure Form – Required – N.J.A.C. 6A:23A-6.3 (a) (4)
All business entities shall submit with their bid/proposal package a completed and signed Chapter 271 Political Contribution Disclosure Form. The Chapter 271 form will be reviewed by the Board to determine whether the business entity is in compliance with the aforementioned N.J.A.C. 6A:23A-6.3 (a) (2) Award of Contract.

The Chapter 271 Political Contribution Disclosure form shall be submitted with the response to the bid/proposal or no later than ten (10) days prior to the award of contract. Failure to provide the completed and signed form shall be cause for disqualification of the bid/proposal.

43. **PRE-BID MEETINGS**

The pre-bid meeting is an important part of the bidding process. It allows all bidders to have an equal understanding of the procurement requirements and of the scope of work involved. Although pre-bid meetings are not mandatory, all potential bidders are strongly encouraged to attend. Please review the General Specifications for a pre-bid meeting announcement. Any or all changes to the bid specifications discussed as a result of the Pre-Bid Meeting will be formalized in the form of any written addenda to the specifications and distributed in accordance with N.J.S.A. 18A:18A-21© (2).

44. **PRE-QUALIFICATION OF BIDDERS**

A. Pursuant to N.J.S.A. 18A:18A-26, 27 et seq., all bidders on any contract for public work(s) which the entire cost of the contract exceeds $20,000.00, must be pre-qualified by the Department of Treasury, Division of Property Management and Construction, as to character and amount of public work on which they may submit bids. No person shall be qualified to bid on any public work contract with the Board if he has not submitted a statement to the Department of Treasury, Division of Property Management and Construction which fully develops the financial ability, adequacy of plant and equipment, organization and prior experience of the prospective bidder, and such other pertinent and material facts, within a period of one year preceding the date of opening of the bids for such contract.

B. Every pre-qualified bidder must submit with his proposal, a notarized affidavit setting forth the type of work and the amount of work for which he has been qualified, that there has been no material adverse change in his qualification information, the total amount of completed work on contracts at the time and date of the classification. Any bid not including a copy of this affidavit shall be rejected as being non-responsive to bid requirements. (N.J.S.A. 18A:18A-32) (**Prequalification Affidavit**)

C. All bidders shall furnish satisfactory evidence that he and his subcontractors have sufficient means and experience in the type of work to complete the project in accordance with the bid specifications. A subcontractor listing and bidder's personnel and experience sheet shall be submitted to the Board as part of the bidding documents. Where the bidder intends to subcontract any portion of the project, the cost of which will exceed $20,000.00, the sub-contractor shall be pre-qualified to perform the work and the bidder shall submit the requisite documentation pertaining to the sub-contractor in accordance with Paragraphs A and B above. The Board may make such additional investigations as it deems necessary to determine the ability, competence and financial responsibility of the bidder to perform the work. The bidder shall furnish the Board with the information and data for this purpose upon request. The Board reserves the right to reject any bid if the information fails to establish to the Board's satisfaction that the

bidder is properly qualified to carry out the obligations of the contract and to complete the work contemplated here.

D. **Notice Of Classification** (For Contracts Exceeding $20,000) (N.J.S.A. 18A:18A-26 et seq.)

Each bidder shall submit with his/her bid a copy of a valid and active Notice of Classification letter issued by the Department of Treasury, Division of Property Management and Construction as appropriate to the nature of the bid.

"The Board of Education, through its authorized agent, shall upon completion of the contract report to the State agency listed on the pre-qualification/classification letter as to the contractor's performance and shall furnish such report from time to time during performance if the contractor is then in default".

E. **Uncompleted Contracts** (For Contracts Exceeding $20,000) (N.J.A.C. 17:19-2.13)
The Board also requires that each bidder submit with his bid a notarized Total Amount of Uncompleted Contracts form as prescribed by law. (Form DPMC 701)

F. **Prequalification Affidavit** (For Contracts Exceeding $20,000)
Pursuant to N.J.S.A. 18A:18A-32, every bidder shall submit with his bid a prequalification affidavit.

45. **PREVAILING WAGES: CONSTRUCTION, ALTERATIONS, REPAIRS**

The State of New Jersey Prevailing Wage Act, Chapter 150 Laws of 1963 with applicable wage rates for Camden County as published by the Department of Labor and Workforce Development in conformance with N.J.S.A. 34:1156:25, is hereby made a part of these Contract Documents. Copies of these wage rates may be obtained from the State Department of Labor and Workforce Development, and/or viewed at www.state.nj.us/labor, the Prevailing Wages Determination Section.

Contractors bidding on this project are to comply with the requirements of the Prevailing Wage Rate Determination pursuant to N.J.S.A. 34:11-56.25, or the Davis-Bacon Prevailing Wage Rates, whichever is higher. Refer to Attachment #01.

Certified Payrolls
Contractor agrees to submit to the Board of Education a certified payroll for each payroll period within ten (10) days of the payment of wages. Contractor further agrees that no payments will be made to the Contractor if certified payrolls are not received. It is the Contractor's responsibility to insure timely receipt by the district of certified payrolls.

Before final payment, the contractor shall furnish the Board of Education with an affidavit stating that all workers have been paid the prevailing rate of wages in accordance with State of New Jersey requirements. The contractor shall keep an accurate record showing the name, craft, or trade and actual hourly rate of wages paid to each workman employed by him in connection with this work. Upon request, the Contractor(s) and each Subcontractor shall file written statements certifying to the amounts then due and owing to any and all workmen for wages due on account of the work. The statements shall be verified by the oaths of the Contractor or Subcontractor, as the case may be.

Posting of Prevailing Wages
The contractor shall post the prevailing wage rates for each craft and classification involved in the work, including the effective date of any changes thereof, in prominent and easily accessible places at the Site of the work and in such place or places as used to pay workmen their wages. (Ref. 18A:7G-23 and N.J.S.A. 34:11-56.32. The bidder shall submit a Prevailing Wages Certification with its bid package.

46. **QUALIFICATION OF BIDDERS** – Contractor Questionnaire Certification Form

The Board of Education may make such investigations as it seems necessary to determine the ability of the bidder to perform the terms of the contract. The bidder shall complete a Contractor Questionnaire Certification Form and return same with the bid and shall furnish all information to the Board as the Board may be required to determine the contractor's ability to perform the duties and obligations as outlined in these specifications.

All bidders are reminded that bids may be rejected as not being responsive pursuant to N.J.S.A. 18A:18A-2(y) and therefore bidders are asked to complete the Questionnaire and to provide any supporting documentation with the bid package.

47. **RESIDENT CITIZENS; PREFERRED IN EMPLOYMENT ON PUBLIC WORKS CONTRACTS**

All bidders are to familiarize themselves with N.J.S.A. 34:9-2, which requires the contractor of any public work project to give preference in employment on the project, to citizens of the state of New Jersey. If the terms and conditions of N.J.S.A. 34:9-2 are not complied with, the contract shall be voidable. The Board is obligated to file with the Commissioner of Labor, the names and addresses of all contractors holding contracts with this project.

48. **RENEWAL OF CONTRACT; AVAILABILITY AND APPROPRIATION OF FUNDS**

The Board of Education may, at its discretion, request that a contract that is subject to renewal, be renewed in full accordance with N.J.S.A. 18A:18A-42. The School Business Administrator/Board Secretary may negotiate terms for a renewal of contract proposal and present such negotiated proposal to the Board of Education. The Board of Education is the final authority in awarding renewals of contracts. All multi-year contracts and renewals are subject to the availability and appropriation annually of sufficient funds as may be needed to meet the extended obligation.

49. **RIGHT TO KNOW LAW**

All potentially hazardous materials or substances must be properly labeled in full accordance with the New Jersey Right to Know Law – N.J.S.A. 34:5A-1 et seq. All contractors or vendors who need additional information about the New Jersey Right to Know Law are to contact the:

New Jersey Department of Health
Right to Know Program
CN 368
Trenton, New Jersey 08625-0368
rtk@doh.state.nj.us

50. **STOCKHOLDERS' DISCLOSURE** (N.J.S.A. 52:25-24.2)

No corporation, partnership or limited liability company, shall be awarded any contract nor shall any agreement be entered into for the performance of any work or the furnishing of any materials or supplies, the cost of which is to be paid with or out of any public funds, by the State, or any county, municipality or school district, or any subsidiary or agency of the State, or of any county, municipality or school district, or by any authority, board, or commission which exercises governmental functions, unless prior to the receipt of the bid or accompanying the bid, of said corporation, said partnership, or said limited liability company, there is submitted a statement setting forth the names and addresses of all stockholders in the corporation who own 10 percent or more of its stock, of any class or of all individual partners in the partnership who own a 10 percent or greater interest therein, or of all members in the limited liability company who own a 10 percent of greater interest therein, as the case may be. If one or more such stockholder or partner or member is itself a corporation or partnership, or limited liability company, the stockholders holding 10 percent or more of that corporation's stock, or the individual partners owning 10 percent or greater interest in that partnership, or the members owning 10 percent or greater interest in that limited liability company, as the case may be, shall also be listed. The disclosure shall be continued until names and addresses of every non corporate stockholder, and individual partner, and member exceeding the 10 percent ownership criteria established in this act, has been listed.

To comply with this section, a bidder with any direct or indirect parent entity which is publicly traded may submit the name and address of each publicly traded entity and the name and address of each person that holds a 10 percent or greater beneficial interest in the publicly traded entity as of the last annual filing with the federal Securities and Exchange Commission or the foreign equivalent, and, if there is any person that holds a 10 percent or greater beneficial interest, also shall submit links to the websites containing the last annual filings with the federal Securities and Exchange Commission or the foreign equivalent and the relevant page numbers of the filings that contain the information on each person that holds a 10 percent or greater beneficial interest. N.J.S.A. 52:25-24.2—as amended P.L. 2016 c.43

The Haddonfield Board of Education has provided within the specifications, a two (2) page form entitled:

STOCKHOLDER/PARTNERSHIP DISCLOSURE AND STATEMENT OF OWNERSHIP

All bidders/respondents are to complete, sign and submit both pages for the form.

Failure to complete, sign and submit the Stockholders' Disclosure Form with the bid/proposal, shall be cause for the disqualification of the bid/proposal.

51. **SUBCONTRACTING: Subcontractor Disclosure Statement**

Pursuant to N.J.S.A. 18A:18A-18(b) any bidder who bids for the overall contract and who will subcontract the following work:

□ Plumbing and gas fitting work;
□ Refrigeration, heating and ventilating systems and equipment;
□ Electrical work, tele-data, fire alarm or security systems; and
□ Structural steel and ornamental iron work;

The bidder shall identify the subcontractor that will be used on the form provided by the school district

Qualified Subcontractors

If the cost of the work done by the subcontractors exceeds $20,000.00, then said contractor shall be qualified in accordance with Article 6 N.J.S.A. 18A:18A-26 et seq. For those subcontractors in the four branches listed above, the bidder shall supply proof that the subcontractor is qualified by submitting with the bid the subcontractor's:

□ Notice of Classification Form
□ Total Amount of Uncompleted Contractor's Form—Certified (Form DPMC 701)

For all other subcontractors who will perform work valued in excess of $20,000.00, the bidder shall submit the evidence of the subcontractor's qualifications listed above within ten (10) days of receipt of notice of the award of contract.

Documents to be Submitted: All Subcontractors

The prime contractor (bidders) who will be using a subcontractor on any part of this bid, shall identify the subcontractor(s) on the appropriate form and submit with the bid package the following subcontractor documents at the time indicated in the box below:

SUBCONTRACTOR DOCUMENT SUBMISSIONS		
Estimated Value of Contract – Subcontractor	For Subcontractors in the four major branches listed above: *Submit With Bid*	For all other Subcontractors: *Submit Within ten (10 Days of Receipt of Notice of Award*
$2,000 through $5,999	Contractor's Registration Certificate	
$6,000 through $17,499	Contractor's Registration Certificate New Jersey Business Registration Certificate	
$17,500 through $19,999	Contractor's Registration Certificate New Jersey Business Registration Certificate Chapter 271 Political Contribution Disclosure Form	
$20,000 or more	Contractor's Registration Certificate New Jersey Business Registration Certificate Chapter 271 Political Contribution Disclosure Form Notice of Classification Total Amount of Uncompleted Contracts – Certified	

Failure to identify in the Subcontractor's Disclosure Statement the names and addresses of any or all subcontractors required to be named in the bid, or to submit with the bid the appropriate documents for each such subcontractor, may be cause for the bid to be rejected as being non-responsive.

Contractors are reminded that the subcontractors listed on the forms provided by the school district may not be changed later, except in the case of failure in performance or other contract breach where a change is needed to protect the school district.

52. **SUBCONTRACTING: PROHIBITIONS: HOLD HARMLESS**

Prime contractors, with whom the Board of Education have an executed contract, may not subcontract any part of any work done for the Board without first receiving written approval from the Board. Contractors seeking to use subcontractors must first complete the Request to Subcontract Form as provided by the Building Services Department.

Subcontractors Prohibited to Subcontract

It is the responsibility of the prime contractor to ensure that no subcontractor who has received written permission to do work for the Board, subcontracts any of its/their work without first receiving written approval from the prime contractor **and** the Board or their designee.

The prime contractor assumes all responsibility for work performed by subcontractors. The prime contractor must also provide to the Board Business Office the following documents secured from all approved subcontractors:

- Insurance Certificate as outlined in the bid specifications;
- Affirmative Action Evidence as outlined in the bid specifications;
- Written certification that the subcontractor shall adhere to prevailing wages as provided through New Jersey State Law;
- Evidence of Performance Security;
- Documents listed in the Subcontractor Document Submissions list.

In cases of subcontracting, the Board of Education shall only pay the prime contractor. It is the sole responsibility of the prime contractor to ensure that all subcontractors are paid. The Board of Education shall not be responsible for payments to subcontractors and shall be held harmless against any or all claims generated against prime contractors for non-payment to subcontractors.

Penalties – Unauthorized Subcontractors

The Board of Education shall deduct the amount of $1,000.00 (one thousand dollars) per day as a penalty, for each day a prime contractor uses a subcontractor without first receiving **written** permission from the Building Services Department.

53. **TAXES; Contractor's Use of Board's Tax Exempt Status**

As a New Jersey governmental entity, the Board of Education is exempt from the requirements under New Jersey state sales and use tax (N.J.S.A. 54:32B-1 et seq.) and does not pay any sales or use taxes. Bidders should note that they are expected to comply with the provisions of said statute and the rules and regulations promulgated thereto to qualify them for examinations and reference to any and all labor, services, materials and supplies furnished to the Board of Education. Contractors may not use the Board's tax identification number to purchase supplies, materials, service or equipment, for this project.

A contractor may qualify for a New Jersey Sales Tax Exemption on the purchase of materials, supplies and services when these purchases are used exclusively to fulfill the terms and conditions of the contract with the Board of Education. All contractors are referred to New Jersey Division of Taxation–Tax Bulletin S&U-3 for guidance. Again, contractors are not permitted to use the Board's tax identification number to purchase supplies, materials, services of equipment.

54. **TERMINATION OF CONTRACT**

If the Board determines that the contractor has failed to comply with the terms and conditions of the bid and/or proposal upon which the issuance of the contract is based or that the contractor has failed to perform said service, duties and or responsibilities in a timely, proper, professional and/or efficient manner, then the Board shall have the authority to terminate the contract upon written notice setting forth the reason for termination and effective date of termination.

Termination by the Board of the contract does not absolve the contractor from potential liability for damages caused the District by the contractor's breach of this agreement. The Board may withhold payment due the contractor and apply same towards damages once established. The Board will act diligently in accordance with governing statutes to mitigate damages. Damages may include the additional cost of procuring said services or goods from other sources.

The contractor further agrees to indemnify and hold the District harmless from any liability to subcontractors or suppliers concerning work performed or goods provided arising out of the lawful termination of this agreement.

55. **WITHDRAWAL OF BIDS**

Before The Bid Opening

The School Business Administrator/Board Secretary may consider a written request from a bidder to withdraw a bid if the written request is received by the School Business Administrator/Board Secretary before the advertised time of the bid opening. Any bidder who has been granted permission by the School Business Administrator/Board Secretary to have his/her bid withdrawn cannot re-submit a bid for the same advertised bid project. That bidder shall also be disqualified from future bidding on the same project if the project is re-bid.

After The Bid Opening

The Board of Education may consider a written request from a bidder to withdraw a bid, if the written request is received by the School Business Administrator/Board Secretary within five (5) business days after the bid opening. A request to withdraw a bid after the specified number of days will not be honored.

The contractor/vendor who wishes to withdraw a bid must provide a certification supported by written factual evidence that an error or omission was made by the contractor and that the error or omission was a substantial computational error or an unintentional omission or both.

The request to withdraw a bid after the bid opening may be reviewed by the School Business Administrator/Board Secretary, the Director of Facilities, other interested administrators; and the Architect/Engineer of Record for the project (if necessary) and/or the Board Attorney and a recommendation will be made to the Board of Education. If the Board of Education grants permission to have the bid withdrawn the contractor/vendor shall be disqualified from bidding on the same project if the project is re-bid. If the contractor/vendor fails to meet the burden of proof to have the bid withdrawn the request to withdraw the bid will be denied and if the contractor/vendor fails to execute the contract the bid guarantee will be forfeited and become property of the Board of Education.

56. **AWARD OF CONTRACT**

The Board of Education intends to award the contract for the project: **#25.14 – New Hopkins Gymnasium, and Addition & Alteration to J.F. Tatem Elementary School**

57. **EXPERIENCE**

The Board of Education requires evidence from all bidders that they have completed work or projects of a similar nature as outlined in the bid package. Bidders are to provide evidence of satisfactory completion of work of similar nature as outlined in the bid from Three (3) Boards of Education in New Jersey within the past Ten (10) years.

58. **NUMBER OF WORKING DAYS** -- (N.J.S.A. 18A:18A-19)

The contractor agrees to substantially complete this public works project to the satisfaction of the Board of Education by **Thursday, December 23rd, 2027 (Tatem ES) & Friday, March 3rd, 2028, (Hopkins Gym)**. The district has defined a working day as a calendar day.

The number of working days set by the district may be extended by mutual agreement between the contractor and the district. The mutual agreement shall be in writing and will be considered an addendum to the contract.

59. **PRE-BID MEETING**

A pre-bid meeting at the Project Site for this project is scheduled for:

Tuesday, August 25th, 2026
10:00 a.m.
J.F. Tatem Elementary
1 Glover Ave, Haddonfield, NJ 08033

The purpose of this meeting is to review the legal and technical requirements of the bid proposal. While attendance is not mandatory, prospective bidders are strongly encouraged to attend this important meeting. Addenda to this bid proposal may be issued as a result of the pre-bid meeting. Failure to attend the meeting will not excuse any bid mistake and/or omission due to bidder's ignorance of information disseminated at the meeting.

60. **TRADE CLASSIFICATION(S) (Optional)**

A. Bidder:

For the purpose of this Public Works bid, each bidder shall be classified by the State of New Jersey—Division of Property Management and Construction in the following trade(s):

Classification Code	Classification Trade Name
C008 or C009	General Construction or General Construction Additions and Alterations

Proof of classification shall be submitted with the bid package in the form of a current Notice of Classification as issued by the New Jersey Division of Property Management and Construction.

B. Subcontractor:

Proof of classification, in the form of a current Notice of Classification form, for each sub-Contractor, shall be submitted by the bidder with the bid package for any estimated subcontractor work exceeding $20,000.00.

HADDONFIELD BOARD OF EDUCATION

BID DOCUMENTS
AND
REQUIRED DOCUMENTATION

All documents in this section shall be completed, signed and submitted with the bid package – Failure to submit the bid documents and other documents so specified may be cause to reject the bid for being non-responsive (N.J.S.A. 18A:18A-2(y)).

Michael Catalano
Business Administrator/Board Secretary

BID PROPOSAL FORM

CONTRACT 25.14A: New Hopkins Gym

Base Bid in the sum of _____Dollars ($_____) which includes the Allowance No. 1 listed below.

ALLOWANCES (included in the Base Bid value above):
Contract A (HG) - Allowance No. 1: One Hundred Twenty-Five Thousand dollars ($125,000.00) included in the Base Bid amount above for unforeseen conditions encountered during the work.

ALTERNATE

ADD Alternate No.1: New Hopkins Gymnasium Landscaping (HG)

_____Dollars ($_____)

ADD Alternate No.2: New Hopkins Existing Iron Fence Restoration (HG)

_____Dollars ($_____)

UNIT PRICES

Unit Price No.1: Selective Asphalt Sub-Base Repair

$_____/SF

Unit Price No.2: Selective Asphalt Base Course Repair

$_____/SF

Bidder's Authorized Representative:

Name: _____
(Printed/Typed)

Title: _____
(Printed/Typed)

Signature: _____

Date: _____

_____
(Seal)

BID PROPOSAL FORM

CONTRACT 25.14B: Addition & Alterations to J.F. Tatem ES

Base Bid in the sum of _____Dollars ($_____) which includes the Allowance No. 1 listed below.

ALLOWANCES (included in the Base Bid value above):

Contract B (TES) - Allowance No. 1: One Hundred Seventy-Five Thousand dollars ($175,000.00) included in the Base Bid amount above for unforeseen conditions encountered during the work.

Bidder's Authorized Representative:

Name: _____
(Printed/Typed)

Title: _____
(Printed/Typed)

Signature: _____

Date: _____

_____
(Seal)

BID PROPOSAL FORM

CONTRACT 25.14C: New Hopkins Gym and Addition & Alterations to J.F. Tatem ES

Base Bid in the sum of _____Dollars ($_____) which includes the Allowance No. 1 listed below.

ALLOWANCES (included in the Base Bid value above):
Contract C - Allowance No. 1: Three Hundred Thousand dollars ($300,000.00) included in the Base Bid amount above for unforeseen conditions encountered during the work.

ALTERNATE

ADD Alternate No.1: New Hopkins Gymnasium Landscaping (HG)

_____Dollars ($_____)

ADD Alternate No.2: New Hopkins Existing Iron Fence Restoration (HG)

_____Dollars ($_____)

UNIT PRICES

Unit Price No.1: Selective Asphalt Sub-Base Repair

$_____/SF

Unit Price No.2: Selective Asphalt Base Course Repair

$_____/SF

Bidder's Authorized Representative:

Name: _____
(Printed/Typed)

Title: _____
(Printed/Typed)

Signature: _____

Date: _____

_____
(Seal)

ACKNOWLEDGEMENT OF ADDENDA AND CLARIFICATIONS

Title of Bid

New Hopkings Gymnasium, and Addition & Alteration to J.F. Tatem ES

Cont. No. **25.14** Bid Date **September 17, 2026**

The bidder acknowledges receipt of the hereinafter enumerated Addenda which have been issued during period of bidding and agrees that said Addenda shall become a part of this contract. The bidder shall list below the numbers and issuing dates of the Addenda.

ADDENDA NO.	ISSUING DATES
_____	_____
_____	_____

CLARIFICATION NO.	ISSUING DATES
_____	_____
_____	_____

□ **No Addenda Received** □ **No Clarifications Received**

Name of Company _____

Address _____ P.O. Box _____

City, State, Zip Code _____

Name of Authorized Representative _____

Signature _____ Date _____

BYRD ANTI-LOBBYING AMENDMENT CERTIFICATION
(To be submitted with each bid or offer exceeding $100,000)

The undersigned, [Company] _____ certifies, to the best of his or her knowledge, that:

1. No Federal appropriated funds have been paid or will be paid, by or on behalf of the undersigned, to any person for influencing or attempting to influence an officer or employee of an agency, a Member of Congress, an officer or employee of Congress, or an employee of a Member of Congress in connection with the awarding of any Federal contract, the making of any Federal grant, the making of any Federal loan, the entering into of any cooperative agreement, and the extension, continuation, renewal, amendment, or modification of any Federal contract, grant, loan, or cooperative agreement.

2. If any funds other than Federal appropriated funds have been paid or will be paid to any person for influencing or attempting to influence an officer or employee of any agency, a Member of Congress, an officer or employee of Congress, or an employee of a Member of Congress in connection with this Federal contract, grant, loan, or cooperative agreement, the undersigned shall complete and submit Standard Form - LLL, "Disclosure Form to Report Lobbying," in accordance with its instructions.

3. The undersigned shall require that the language of this certification be included in the award documents for all subawards at all tiers (including subcontracts, subgrants, and contracts under grants, loans, and cooperative agreements) and that all subrecipients shall certify and disclose accordingly.

This certification is a material representation of fact upon which reliance was placed when this transaction was made or entered into. Submission of this certification is a prerequisite for making or entering into this transaction imposed by 31, U.S.C. § 1352 (as amended by the Lobbying Disclosure Act of 1995). Any person who fails to file the required certification shall be subject to a civil penalty of not less than $10,000 and not more than $100,000 for each such failure.

The Contractor, [Company] _____, certifies or affirms the truthfulness and accuracy of each statement of its certification and disclosure, if any. In addition, the Contractor understands and agrees that the provisions of 31 U.S.C. § 3801 *et seq*., apply to this certification and disclosure, if any.

_____
Signature of Contractor's Authorized Official

_____
Name and Title of Contractor's Authorized Official

_____
Date

Haddonfield Board of Education

Chapter 271
Political Contribution Disclosure Form
(Contracts that Exceed $17,500.00)
Ref. N.J.S.A. 19:44-20.26

The undersigned, being authorized and knowledgeable of the circumstances, does hereby certify that _____ (**Business Entity**) has made the following **reportable** political contributions to any elected official, political candidate or any political committee as defined in N.J.S.A. 19:44-20.26 during the twelve (12) months preceding this award of contract:

Reportable Contributions

Date of Contribution	Amount of Contribution	Name of Recipient Elected Official/ Committee/Candidate	Name of Contributor

The Business Entity may attach additional pages if needed.

□ **No Reportable Contributions** (Please check (⍰) if applicable.)

I certify that _____(Business Entity) made no reportable contributions to any elected official, political candidate or any political committee as defined in N.J.S.A. 19:44-20.26.

Certification

I certify that the information provided above is in full compliance with Public Law 2005—Chapter 271.

Name of Authorized Agent _____

Signature _____ **Title** _____

Business Entity_____

Title of Bid: **New Hopkins Gymnasium, and Additon & Alteration to J.F. Tatem Elementary School**
Contract No: **25.14**

Contractor Instructions

Business entities (contractors) receiving contracts from a public agency that are NOT awarded pursuant to a "fair and open" process (defined at N.J.S.A. 19:44A-20.7) are subject to the provisions of P.L. 2005, c. 271, s.2 (N.J.S.A. 19:44A-20.26). This law provides that 10 days prior to the award of such a contract, the contractor shall disclose contributions to:

- any State, county, or municipal committee of a political party
- any legislative leadership committee*
- any continuing political committee (a.k.a., political action committee)
- any candidate committee of a candidate for, or holder of, an elective office:
  - of the public entity awarding the contract
  - of that county in which that public entity is located
  - of another public entity within that county
  - or of a legislative district in which that public entity is located or, when the public entity is a county, of any legislative district which includes all or part of the county

The disclosure must list reportable contributions to any of the committees that exceed $300 per election cycle that were made during the 12 months prior to award of the contract. See N.J.S.A. 19:44A-8 and 19:44A-16 for more details on reportable contributions.

N.J.S.A. 19:44A-20.26 itemizes the parties from whom contributions must be disclosed when a business entity is not a natural person. This includes the following:

- individuals with an "interest" ownership or control of more than 10% of the profits or assets of a business entity or 10% of the stock in the case of a business entity that is a corporation for profit
- all principals, partners, officers, or directors of the business entity or their spouses
- any subsidiaries directly or indirectly controlled by the business entity
- IRS Code Section 527 New Jersey based organizations, directly or indirectly controlled by the business entity and filing as continuing political committees, (PACs).

When the business entity is a natural person, "a contribution by that person's spouse or child, residing therewith, shall be deemed to be a contribution by the business entity." [N.J.S.A. 19:44A-20.26(b)] The contributor must be listed on the disclosure.

Any business entity that fails to comply with the disclosure provisions shall be subject to a fine imposed by ELEC in an amount to be determined by the Commission which may be based upon the amount that the business entity failed to report.

The enclosed list of agencies is provided to assist the contractor in identifying those public agencies whose elected official and/or candidate campaign committees are affected by the disclosure requirement. It is the contractor's responsibility to identify the specific committees to which contributions may have been made and need to be disclosed. The disclosed information may exceed the minimum requirement.

The enclosed form, a content-consistent facsimile, or an electronic data file containing the required details (along with a signed cover sheet) may be used as the contractor's submission and is disclosable to the public under the Open Public Records Act.

The contractor must also complete the attached Stockholder Disclosure Certification. This will assist the agency in meeting its obligations under the law. **NOTE: This section does not apply to Board of Education contracts.**

N.J.S.A. 19:44A-3(s): "The term "legislative leadership committee" means a committee established, authorized to be established, or designated by the President of the Senate, the Minority Leader of the Senate, the Speaker of the General Assembly or the Minority Leader of the General Assembly pursuant to section 16 of P.L.1993, c.65 (C.19:44A-10.1) for the purpose of receiving contributions and making expenditures."

P.L. 2005, c.271

(Unofficial version, Assembly Committee Substitute to A-3013, First Reprint*)

AN ACT authorizing units of local government to impose limits on political contributions by contractors and supplementing Title 40A of the New Jersey Statutes and Title 19 of the Revised Statutes.

BE IT ENACTED by the Senate and General Assembly of the State of New Jersey:

40A:11-51 1. a. A county, municipality, independent authority, board of education, or fire district is hereby authorized to establish by ordinance, resolution or regulation, as may be appropriate, measures limiting the awarding of public contracts therefrom to business entities that have made a contribution pursuant to P.L.1973, c.83 (C.19:44A-l et seq.) and limiting the contributions that the holders of a contract can make during the term of a contract, notwithstanding the provisions and parameters of sections 1 through 12 of P.L.2004, c.19 (C. 19:44A-20.2 et al.) and section 22 of P.L.1973, c.83 (C.19:44A-22).

b. The provisions of P.L.2004, c.19 shall not be construed to supersede or preempt any ordinance, resolution or regulation of a unit of local government that limits political contributions by business entities performing or seeking to perform government contracts. Any ordinance, resolution or regulation in effect on the effective date of P.L.2004, c.19 shall remain in effect and those adopted after that effective date shall be valid and enforceable.

c. An ordinance, resolution or regulation adopted or promulgated as provided in this section shall be filed with the Secretary of State.

19:44A-20.26 2. a. Not later than 10 days prior to entering into any contract having an anticipated value in excess of $17,500, except for a contract that is required by law to be publicly advertised for bids, a State agency, county, municipality, independent authority, board of education, or fire district shall require any business entity bidding thereon or negotiating therefor, to submit along with its bid or price quote, a list of political contributions as set forth in this subsection that are reportable by the recipient pursuant to the provisions of P.L.1973, c.83 (C.19:44A-l et seq.) and that were made by the business entity during the preceding 12 month period, along with the date and amount of each contribution and the name of the recipient of each contribution. A business entity contracting with a State agency shall disclose contributions to any State, county, or municipal committee of a political party, legislative leadership committee, candidate committee of a candidate for, or holder of, a State elective office, or any continuing political committee. A business entity contracting with a county, municipality, independent authority, other than an independent authority that is a State agency, board of education, or fire district shall disclose contributions to: any State, county, or municipal committee of a political party; any legislative leadership committee; or any candidate committee of a candidate for, or holder of, an elective office of that public entity, of that county in which that public entity is located, of another public entity within that county, or of a legislative district in which that public entity is located or, when the public entity is a county, of any legislative district which includes all or part of the county, or any continuing political committee.

The provisions of this section shall not apply to a contract when a public emergency requires the immediate delivery of goods or services.

b. When a business entity is a natural person, a contribution by that person's spouse or child, residing therewith, shall be deemed to be a contribution by the business entity. When a business entity is other than a natural person, a contribution by any person or other business entity having an interest therein shall be deemed to be a contribution by the business entity. When a business entity is other than a natural person, a contribution by: all principals, partners, officers, or directors of the business entity or their spouses; any subsidiaries directly or indirectly controlled by the business entity; or any political organization organized under section 527 of the Internal Revenue Code that is directly or indirectly controlled by the business entity, other than a candidate committee, election fund, or political party committee, shall be deemed to be a contribution by the business entity.

c. As used in this section:

"business entity" means a natural or legal person, business corporation, professional services corporation, limited liability company, partnership, limited partnership, business trust, association or any other legal commercial entity organized under the laws of this State or of any other state or foreign jurisdiction;

"interest" means the ownership or control of more than 10% of the profits or assets of a business entity or 10% of the stock in the case of a business entity that is a corporation for profit, as appropriate; and

"State agency" means any of the principal departments in the Executive Branch of the State Government, and any division, board, bureau, office, commission or other instrumentality within or created by such department, the Legislature of the State and any office, board, bureau or commission within or created by the Legislative Branch, and any independent State authority, commission, instrumentality or agency.

d. Any business entity that fails to comply with the provisions of this section shall be subject to a fine imposed by the New Jersey Election Law Enforcement Commission in an amount to be determined by the commission which may be based upon the amount that the business entity failed to report.

19:44A-20.13 3. a. Any business entity making a contribution of money or any other thing of value, including an in-kind contribution, or pledge to make a contribution of any kind to a candidate for or the holder of any public office having ultimate responsibility for the awarding of public contracts, or to a political party committee, legislative leadership committee, political committee or continuing political committee, which has received in any calendar year $50,000 or more in the aggregate through agreements or contracts with a public entity, shall file an annual disclosure statement with the New Jersey Election Law Enforcement Commission, established pursuant to section 5 of P.L.1973, c.83 (C.19:44A-5), setting forth all such contributions made by the business entity during the 12 months prior to the reporting deadline.

b. The commission shall prescribe forms and procedures for the reporting required in subsection a. of this section which shall include, but not be limited to:

(1) the name and mailing address of the business entity making the contribution, and the amount contributed during the 12 months prior to the reporting deadline;

(2) the name of the candidate for or the holder of any public office having ultimate responsibility for the awarding of public contracts, candidate committee, joint candidates committee, political party committee, legislative leadership committee, political committee or continuing political committee receiving the contribution; and

(3) the amount of money the business entity received from the public entity through contract or agreement, the dates, and information identifying each contract or agreement and describing the goods, services or equipment provided or property sold.

c. The commission shall maintain a list of such reports for public inspection both at its office and through its Internet site.

d. When a business entity is a natural person, a contribution by that person's spouse or child, residing therewith, shall be deemed to be a contribution by the business entity. When a business entity is other than a natural person, a contribution by any person or other business entity having an interest therein shall be deemed to be a contribution by the business entity. When a business entity is other than a natural person, a contribution by: all principals, partners, officers, or directors of the business entity, or their spouses; any subsidiaries directly or indirectly controlled by the business entity; or any political organization organized under section 527 of the Internal Revenue Code that is directly or indirectly controlled by the business entity, other than a candidate committee, election fund, or political party committee, shall be deemed to be a contribution by the business entity.

As used in this section:
"business entity" means a natural or legal person, business corporation, professional services corporation, limited liability company, partnership, limited partnership, business trust, association or any other legal commercial entity organized under the laws of this State or of any other state or foreign jurisdiction; and

"interest" means the ownership or control of more than 10% of the profits or assets of a business entity or 10% of the stock in the case of a business entity that is a corporation for profit, as appropriate.

e. Any business entity that fails to comply with the provisions of this section shall be subject to a fine imposed by the New Jersey Election Law Enforcement Commission in an amount to be determined by the commission which may be based upon the amount that the business entity failed to report.

4. This act shall take effect immediately.
* Note: Bold italicized statutory references of new sections are anticipated and not final as of the time this document was prepared. Statutory compilations of N.J.S.A. 18A:18A-51 is anticipated to show a reference to N.J.S.A. 40A:11-51 and to N.J.S.A.19:44A-20.26.

List of Agencies with Elected Officials Required for Political Contribution Disclosure
N.J.S.A. 19:44A-20.26

County Name: Camden

State: Governor, and Legislative Leadership Committees

Legislative District #s: 4, 5, 6, & 7

State Senator and two members of the General Assembly per district.

County:

Freeholders County Clerk Sheriff Surrogate

Municipalities (Mayor and members of governing body, regardless of title):

Audubon Borough
Audubon Park Borough
Barrington Borough
Bellmawr Borough
Berlin Borough
Berlin Township
Brooklawn Borough
Camden City
Cherry Hill Township
Chesilhurst Borough
Clementon Borough
Collingswood Borough
Gibbsboro Borough
Gloucester City
Gloucester Township
Haddon Heights Borough
Haddon Township
Haddonfield Borough
Hi-nella Borough
Laurel Springs Borough
Lawnside Borough
Lindenwold Borough
Magnolia Borough
Merchantville Borough
Mount Ephraim Borough
Oaklyn Borough
Pennsauken Township
Pine Hill Borough
Pine Valley Borough
Runnemede Borough
Somerdale Borough
Stratford Borough
Tavistock Borough
Voorhees Township
Waterford Township
Winslow Township
Woodlynne Borough

Boards of Education (Members of the Board):

Audubon Borough
Audubon Park Borough
Barrington Borough
Bellmawr Borough
Berlin Borough
Berlin Township
Black Horse Pike Regional
Brooklawn Borough
Camden City
Cherry Hill Township
Chesilhurst
Clementon Borough
Collingswood Borough
Eastern Camden County
Regional
Gibbsboro Borough
Gloucester City
Gloucester Township
Haddon Heights Borough
Haddon Township
Haddonfield Borough
Hi Nella
Laurel Springs Borough
Lawnside Borough
Lindenwold Borough
Magnolia Borough
Merchantville Borough
Mount Ephraim Borough
Oaklyn Borough
Pennsauken Township
Pine Hill Borough
Pine Valley
Runnemede Borough
Somerdale Borough
Sterling High School District
Stratford Borough
Tavistock
Voorhees Township
Waterford Township
Winslow Township
Woodlynne Borough

Fire Districts (Board of Fire Commissioners):

Berlin Township Fire District No. 1
Cherry Hill Fire District No. 13
Gloucester Township Fire District No. 1
Gloucester Township Fire District No. 2
Gloucester Township Fire District No. 3
Gloucester Township Fire District No. 4
Gloucester Township Fire District No. 5
Gloucester Township Fire District No. 6
Haddon Township Fire District No. 1
Haddon Township Fire District No. 2
Haddon Township Fire District No. 3
Haddon Township Fire District No. 4
Lindenwold Borough Fire District No. 1
Pine Hill Borough Fire District No. 1
Voorhees Township Fire District No. 3
Winslow Township Fire District No. 1

Haddonfield Board of Education

CONTRACTOR QUESTIONNAIRE/CERTIFICATION

Title of Bid

New Hopkings Gymnasium, and Addition & Alteration to J.F. Tatem ES

Cont. No. **25.14** Bid Date **September 17, 2026**

Name of Company _____

Street Address _____ P.O. Box _____

City, State, Zip _____

Business Phone Number ( )_____ Extension _____

Emergency Phone Number ( )_____

FAX NO. ( )_____ E-Mail _____

FEIN No. _____

Questionnaire

1. How many years have you been engaged in the contracting business under your present firm or trading name?
   _____ Years

2. Have you ever failed to complete any work awarded to your company?

   ☐ Yes ☐ No

   If yes, explain _____

   _____

3. Have you ever defaulted on a contract?

   ☐ Yes ☐ No

   If yes, explain _____

   _____

4. Have you or other principals of your company been debarred, suspended, proposed for debarment, declared ineligible, or voluntary excluded from participation in any public works projects by any federal, state, or local agencies, including any **"prior negative experience** " disqualification pursuant to N.J.S.A. 18A:18A-4 (b) (c)?

   ☐ Yes ☐ No

(Form continued on next page)

Title of Bid

New Hopkings Gymnasium, and Addition & Alteration to J.F. Tatem ES

Cont. No. **25.14** Bid Date **September 17, 2026**

_____
Name of Company

If yes, explain _____
_____

Experience – Educational Facilities:
The Board of Education requires evidence from all bidders that they have completed work or projects of a similar nature as outlined in the bid package. Bidders are to provide evidence of satisfactory completion of work of similar nature as outlined in the bid from up to Three (3) public school districts in New Jersey within the past Ten (10) years. Bidders are to complete the section on experience and provide supporting documentation with the bid package.

A. Title of Work/Project: _____

Name of School District: _____

Name of School Official: _____ Title _____

Phone Number _____ E-Mail _____

Date(s) of Project: _____

B. Title of Work/Project: _____

Name of School District: _____

Name of School Official: _____ Title _____

Phone Number _____ E-Mail _____

Date(s) of Project: _____

C. Title of Work/Project: _____

Name of School District: _____

Name of School Official: _____ Title _____

Phone Number _____ E-Mail _____

Date(s) of Project: _____

(Form continued on next page)

Title of Bid

New Hopkings Gymnasium, and Addition & Alteration to J.F. Tatem ES

Cont. No. **25.14** Bid Date **September 17, 2026**

_____
Name of Company

References

Architects--List names of architects that you have worked with on projects within the last five (5) years.

	Firm	Principal	Phone Number
1.	_____	_____	_____
2.	_____	_____	_____
3.	_____	_____	_____

Bank--List name of principal bank with which your company does business.

Bank	Officer	Phone Number
_____	_____	_____

Trade--List names of companies within your trade with which your company does business:

	Firm	Principal	Phone Number
1.	_____	_____	_____
2.	_____	_____	_____
3.	_____	_____	_____

(Form continued on next page)

Title of Bid

New Hopkings Gymnasium, and Addition & Alteration to J.F. Tatem ES

Cont. No. **25.14** Bid Date **September 17, 2026**

_____
Name of Company

Certifications

- ***Debarment***

I certify that the entity listed on the form or any person employed by this entity, are not presently on the following:

- New Jersey Department of Treasury – Consolidated Debarment Report
- New Jersey Department of Labor – Prevailing Wage Debarment List
- Federal Debarred Vendor List—System for Award Management (SAM.gov)

- ***Direct/Indirect Interests***

I declare and certify that no member of the Haddonfield Board of Education, nor any officer or employee or person whose salary is payable in whole or in part by said Board of Education or their immediate family members are directly or indirectly interested in this bid or in the supplies, materials, equipment, work or services to which it relates, or in any portion of profits thereof. If a situation so exists where a Board member, employee, officer of the board has an interest in the bid, etc., then please attach a letter of explanation to this document, duly signed by the president of the firm or company.

- ***Gifts; Gratuities; Compensation***

I declare and certify that no person from my firm, business, corporation, association or partnership offered or paid any fee, commission or compensation, or offered any gift, gratuity or other thing of value to any school official, board member or employee of the Board of Education.

- ***Vendor Contributions***

I declare and certify that I fully understand N.J.A.C. 6A:23A-6.3 (a) (1-4) concerning vendor contributions to school board members.

- ***False Material Representation***

I further certify that I understand that it is a crime in the second degree in New Jersey to knowingly make a material representation that is false in connection with the negotiation, award or performance of a government contract.

_____
President or Authorized Agent

_____
Signature

CERTIFICATION OF NON-DEBARMENT FOR FEDERAL GOVERNMENT CONTRACTS

N.J.S.A. 52:32-44.1 (P.L. 2019, c.406)

This certification shall be completed, certified to, and submitted to the contracting unit prior to contract award, except for emergency contracts where submission is required prior to payment.

PART I: VENDOR INFORMATION	
Individual or Organization Name	
Address of Individual or Organization	
DUNS Code (if applicable)	
CAGE Code (if applicable)	
Check the box that represents the type of business organization:	

☐Sole Proprietorship (skip Parts III and IV) ☐Non-Profit Corporation (skip Parts III and IV)

☐For-Profit Corporation (any type) ☐Limited Liability Company (LLC) ☐Partnership

☐Limited Partnership ☐Limited Liability Partnership (LLP)

☐Other (be specific): _____

PART II – CERTIFICATION OF NON-DEBARMENT: Individual or Organization			
I hereby certify that the **individual or organization listed above in Part I** is not debarred by the federal government from contracting with a federal agency. I further acknowledge: that I am authorized to execute this certification on behalf of the above-named organization; that the ***<name of contracting unit>*** is relying on the information contained herein and that I am under a continuing obligation from the date of this certification through the date of contract award by ***<type of contracting unit>*** to notify the ***<type of contracting unit>*** in writing of any changes to the information contained herein; that I am aware that it is a criminal offense to make a false statement or misrepresentation in this certification, and if I do so, I am subject to criminal prosecution under the law and that it will constitute a material breach of my agreement(s) with the ***<type of contracting unit>***, permitting the ***<type of contracting unit>*** to declare any contract(s) resulting from this certification void and unenforceable.			
Full Name (Print):		Title:	
Signature:		Date:	

PART III – CERTIFICATION OF NON-DEBARMENT: Individual or Entity Owning Greater than 50 Percent of Organization	
Section A (Check the Box that applies)	
☐	Below is the name and address of the stockholder in the corporation who owns more than 50 percent of its voting stock, or of the partner in the partnership who owns more than 50 percent interest therein, or of the member of the limited liability company owning more than 50 percent interest therein, as the case may be.
Name of Individual or Organization	
Home Address (for Individual) or Business Address	
OR	
☐	No one stockholder in the corporation owns more than 50 percent of its voting stock, or no partner in the partnership owns more than 50 percent interest therein, or no member in the limited liability company owns more than 50 percent interest therein, as the case may be.
Section B (Skip if no Business entity is listed in Section A above)	
☐	Below is the name and address of the stockholder in the corporation who owns more than 50 percent of the voting stock of the organization's parent entity, or of the partner in the partnership who owns more than 50 percent interest in the organization's parent entity, or of the member of the limited liability company owning more than 50 percent interest in organization's parent entity, as the case may be.
Stockholder/Partner/Member Owning Greater Than 50 Percent of Parent Entity	
Home Address (for Individual) or Business Address	
OR	
☐	No one stockholder in the parent entity corporation owns more than 50 percent of its voting stock, no partner in the parent entity partnership owns more than 50 percent interest therein, or no member in the parent entity limited liability company owns more than 50 percent interest therein, as the case may be.

CERTIFICATION OF NON-DEBARMENT FOR FEDERAL GOVERNMENT CONTRACTS - page 3

N.J.S.A. 52:32-44.1 (P.L. 2019, c.406)

Section C – Part III Certification			
I hereby certify that no individual or organization that is debarred by the federal government from contracting with a federal agency owns greater than 50 percent of the **Organization listed above in Part I** or, if applicable, owns greater than 50 percent of a parent entity of **<name of organization>**. I further acknowledge: that I am authorized to execute this certification on behalf of the above-named organization; that the ***<name of contracting unit>*** is relying on the information contained herein and that I am under a continuing obligation from the date of this certification through the date of contract award ***<type of contracting unit>*** to notify the ***<type of contracting unit>*** in writing of any changes to the information contained herein; that I am aware that it is a criminal offense to make a false statement or misrepresentation in this certification, and if I do so, I am subject to criminal prosecution under the law and that it will constitute a material breach of my agreement(s) with the ***<type of contracting unit>***, permitting the ***<type of contracting unit>*** to declare any contract(s) resulting from this certification void and unenforceable.			
Full Name (Print):		Title:	
Signature:		Date:	

Part IV – CERTIFICATION OF NON-DEBARMENT: Contractor – Controlled Entities		
Section A		
☐	Below is the name and address of the corporation(s) in which the **Organization listed in Part I** owns more than 50 percent of voting stock, or of the partnership(s) in which the **Organization listed in Part I** owns more than 50 percent interest therein, or of the limited liability company or companies in which the **Organization listed above in Part I** owns more than 50 percent interest therein, as the case may be.	
Name of Business Entity	**Business Address**	
Add additional sheets if necessary		
OR		

☐	The **Organization listed above in Part I** does not own greater than 50 percent of the voting stock in any corporation and does not own greater than 50 percent interest in any partnership or any limited liability company.

CERTIFICATION OF NON-DEBARMENT FOR FEDERAL GOVERNMENT CONTRACTS - page 4

N.J.S.A. 52:32-44.1 (P.L. 2019, c.406)

Section B (skip if no business entities are listed in Section A of Part IV)	
☐	Below are the names and addresses of any entities in which an entity listed in Part III A owns greater than 50 percent of the voting stock (corporation) or owns greater than 50 percent interest (partnership or limited liability company).

Name of Business Entity Controlled by Entity Listed in Section A of Part IV	**Business Address**
Add additional Sheets if necessary	

OR	
☐	No entity listed in Part III A owns greater than 50 percent of the voting stock in any corporation or owns greater than 50 percent interest in any partnership or limited liability company.

Section C – Part IV Certification

I hereby certify that the **Organization listed above in Part I** does not own greater than 50 percent of any entity that that is debarred by the federal government from contracting with a federal agency and, if applicable, does not own greater than 50 percent of any entity that in turns owns greater than 50 percent of any entity debarred by the federal government from contracting with a federal agency. I further acknowledge: that I am authorized to execute this certification on behalf of the above-named organization; that the ***<name of contracting unit>*** is relying on the information contained herein and that I am under a continuing obligation from the date of this certification through the date of contract award by ***<type of contracting unit>*** to notify the ***<type of contracting unit>*** in writing of any changes to the information contained herein; that I am aware that it is a criminal offense to make a false statement or misrepresentation in this certification, and if I do so, I am subject to criminal prosecution under the law and that it will constitute a material breach of my agreement(s) with the ***<type of contracting unit>***, permitting the ***<type of contracting unit>*** to declare any contract(s) resulting from this certification void and unenforceable.

Full Name (Print):		Title:	
Signature:		Date:	

CONTRACTOR REGISTRATION CERTIFICATION

Title of Bid

New Hopkings Gymnasium, and Addition & Alteration to J.F. Tatem ES

Cont. No. **25.14** Bid Date **September 17, 2026**

It is the determination of the Board of Education that this is a public works project that in total will exceed $2,000.00 (two thousand dollars), therefore pursuant to the Public Works Contractor Registration Act -- N.J.S.A. 34:11-56.48 et seq., no contractor shall bid on any project for public works unless the contractor is registered pursuant to the act.

I certify that our company understands that the project of the Board of Education requires that all contractors and subcontractors listed in this proposal possess a valid Contractor Registration Certificate at the time the proposal is received by the Board and furthermore certify that I will provide copies of the valid certificate prior to the award of contract.

Name of Company_____

Authorized Agent_____

Authorized Signature_____

EQUIPMENT CERTIFICATION

Title of Bid

New Hopkings Gymnasium, and Addition & Alteration to J.F. Tatem ES

Cont. No. **25.14** Bid Date **September 17, 2026**

In accordance with N.J.S.A. 18A:18A-23, I hereby certify that

A) _____ *(Name of Company)* owns all the necessary equipment as required by the specifications and to complete the specified public work project.

or

B) _____ (*Name of Company)* leases or controls all the necessary equipment as required by the specifications and to complete the specified public work project.

PLEASE NOTE: If your company is not the actual owner of the equipment, **you shall submit with the bid**

1. A certificate stating the source from which the equipment will be obtained and

2. Obtain and submit with the bid a certificate from the owner and person in control of the equipment, definitely granting to the bidder the control of the equipment required during such time it may be necessary for the completion of that portion of the contract for which said equipment will be necessary.

Name of Company_____

Authorized Agent_____

Authorized Signature_____

STATE OF NEW JERSEY -- DIVISION OF PURCHASE AND PROPERTY
DISCLOSURE OF INVESTMENT ACTIVITIES IN IRAN

Quote Number: **Bidder/Offeror:**

PART 1: CERTIFICATION
BIDDERS MUST COMPLETE PART 1 BY CHECKING EITHER BOX.
FAILURE TO CHECK ONE OF THE BOXES WILL RENDER THE PROPOSAL NON-RESPONSIVE.

Pursuant to Public Law 2012, c. 25, any person or entity that submits a bid or proposal or otherwise proposes to enter into or renew a contract must complete the certification below to attest, under penalty of perjury, that neither the person or entity, nor any of its parents, subsidiaries, or affiliates, is identified on the Department of Treasury's Chapter 25 list as a person or entity engaging in investment activities in Iran. The Chapter 25 list is found on the Division's website at http://www.state.nj.us/treasury/purchase/pdf/Chapter25List.pdf. Bidders **must** review this list prior to completing the below certification. **Failure to complete the certification will render a bidder's proposal non-responsive**. If the Director finds a person or entity to be in violation of law, s/he shall take action as may be appropriate and provided by law, rule or contract, including but not limited to, imposing sanctions, seeking compliance, recovering damages, declaring the party in default and seeking debarment or suspension of the party

PLEASE CHECK THE APPROPRIATE BOX:

☐ **I certify, pursuant to Public Law 2012, c. 25, that neither the bidder listed above nor any of the bidder's parents, subsidiaries, or affiliates is listed** on the N.J. Department of the Treasury''s list of entities determined to be engaged in prohibited activities in Iran pursuant to P.L. 2012, c. 25 ("Chapter 25 List"). I further certify that I am the person listed above, or I am an officer or representative of the entity listed above and am authorized to make this certification on its behalf. **I will skip Part 2 and sign and complete the Certification below.**

OR

☐ **I am unable to certify as above because the bidder and/or one or more of its parents, subsidiaries, or affiliates is listed on the Department's Chapter 25 list. I will provide a detailed, accurate and precise description of the activities in Part 2 below and sign and complete the Certification below**. Failure to provide such will result in the proposal being rendered as non-responsive and appropriate penalties, fines and/or sanctions will be assessed as provided by law.

PART 2: PLEASE PROVIDE FURTHER INFORMATION RELATED TO INVESTMENT ACTIVITIES IN IRAN
You must provide a detailed, accurate and precise description of the activities of the bidding person/entity, or one of its parents, subsidiaries or affiliates, engaging in the investment activities in Iran outlined above by completing the boxes below.

EACH BOX WILL PROMPT YOU TO PROVIDE INFORMATION RELATIVE TO THE ABOVE QUESTIONS. PLEASE PROVIDE THOROUGH ANSWERS TO EACH QUESTION. IF YOU NEED TO MAKE ADDITIONAL ENTRIES, CLICK THE "ADD AN ADDITIONAL ACTIVITIES ENTRY" BUTTON.

Name Relationship to Bidder/Offeror

Description of Activities

Duration of Engagement Anticipated Cessation Date

Bidder/Offeror Contact Name Contact Phone Number

ADD AN ADDITIONAL ACTIVITIES ENTRY

Certification: I, being duly sworn upon my oath, hereby represent that the foregoing information and any attachments thereto to the best of my knowledge are true and complete. I acknowledge: that I am authorized to execute this certification on behalf of the bidder; that the State of New Jersey is relying on the information contained herein and that I am under a continuing obligation from the date of this certification through the completion of any contracts with the State to notify the State in writing of any changes to the information contained herein; that I am aware that it is a criminal offense to make a false statement or misrepresentation in this certification, and if I do so, I am subject to criminal prosecution under the law and that it will constitute a material breach of my agreement(s) with the State, permitting the State to declare any contract(s) resulting from this certification void and unenforceable.

Full Name (Print): Signature:

Do Not Enter PIN as a Signature

Title: Date:

AFFIRMATIVE ACTION QUESTIONNAIRE

Title of Bid

New Hopkings Gymnasium, and Addition & Alteration to J.F. Tatem ES

Cont. No. **25.14** Bid Date **September 17, 2026**

This form is to be completed and returned with the proposal. However, the Board will accept in lieu of this Questionnaire, a current Affirmative Action Evidence - Certificate of Employee Information Report.

1. Our company has a federal Affirmative Action Plan approval ☐ Yes ☐ No

   If yes, please attach a copy of the plan to this questionnaire.
2. Our company has a N.J. State Certificate of Employee Information Report ☐ Yes ☐ No

   If yes, please attach a copy of the certificate to this questionnaire.

3. If you answered "NO" to both questions No. 1 and 2, you must apply for an Affirmative Action Employee Information Report – Form AA302.

Please visit the New Jersey Department of Treasury website for the Division of Public Contracts Equal Employment Opportunity Compliance: www.state.nj.us/treasury/contract compliance

- Click on "Employee Information Report"
- Complete and submit the form with the appropriate payment to:

Department of Treasury
Division of Public Contracts/EEO Compliance
P.O. Box 209
Trenton, NJ 08625-0002

All fees for this application are to be paid directly to the State of New Jersey. A copy shall be submitted to the Board of Educations within seven (7) days of the notice of the intent to award the contract or the signing of the contract.

I certify that the above information is correct to the best of my knowledge.

Name: _____

Signature _____

Title _____ Date _____

Name of Company _____

Address _____

City, State, Zip _____

NON-COLLUSION AFFIDAVIT

Title of Bid

New Hopkings Gymnasium, and Addition & Alteration to J.F. Tatem ES

Cont. No. **25.14** Bid Date **September 17, 2026**

Re: Bid Proposal for the Haddonfield Board of Education.

STATE OF _____
:ss:
COUNTY OF _____

I, _____ of the City of _____

in the County of _____ and the State of _____

of full age, being duly sworn according to law on my oath depose and say that:

I am_____(Position in Company)

of the firm of _____ and the bidder making the Proposal for the above names contract, and that I executed the said Proposal with full authority so to do; that I have not, directly or indirectly, entered into any agreement, participated in any collusion, discussed any or all parts of this proposal with any potential bidder, or otherwise taken any action in restraint of free, competitive bidding in connection with the above named bid, and that all statements contained in said Proposal and in this affidavit are true and correct, and made with full knowledge that the Board of Education relies upon the truth of the statements contained in said Proposal and in the statements contained in this affidavit in awarding the contract for the said bid.

I further warrant that no person or selling agency has been employed or retained to solicit or secure such contract upon an agreement or understanding for a commission, percentage, brokerage or contingent fee, except bona fide employees of bona fide established commercial or selling agencies maintained by

_____
(Print Name of Contractor)

Subscribed and sworn to: _____
(**SIGNATURE OF CONTRACTOR**)

before me this _____ day of _____, _____.
Month Year

_____ _____
NOTARY PUBLIC SIGNATURE **Print Name of Notary Public**

My commission expires _____ _____, _____. **- Seal –**

Month Day Year

PRE-QUALIFICATION AFFIDAVIT

Title of Bid

New Hopkings Gymnasium, and Addition & Alteration to J.F. Tatem ES

Cont. No. **25.14** Bid Date **September 17, 2026**

The below affidavit must be submitted with your bid for projects over $20,000.00 pursuant to N.J.S.A. 18A:18A-32:

I, _____ of the City of _____

in the County of _____ and the State of _____

of full age, being duly sworn according to law on my oath depose and say that:

No Material Adverse Change in Qualification—N.J.S.A. 18A:18A-32

I am_____(*Position in Company*), and the bidder for the above named project and the answers to the following statements are true and correct and that there has been no material adverse change in the qualification information subsequent to the latest statement submitted as required (N.J.S.A. 18A:18A-32 et seq.) as amended, except as set forth herewith:

Notice of Classification

_____(Name of Company) is classified by the State of New Jersey under Chapter 105, Laws of 1962, as amended. This Classification became effective _____*(Date)*

Type of Contract/Trade Classified: _____

_____

Classification Approved Amount $ _____

A copy of my valid and active prequalification/classification certificate from the Department of Treasury, Division of Property Management and Construction is attached.

Total Amount of Uncompleted Contracts

The total amount of uncompleted work on contracts is $_____

A copy of the company's Total Amount of Uncompleted Contracts form is required to be submitted with the bid.

_____ _____

Signature of Authorized Representative **Date**

Sworn and subscribed to before me this _____ day of _____ in the Year _____.

_____ _____ Notary Public of _____

Signature of Notary **Print Name of Notary**

My Commission Expires:_____ _____ _____ **-SEAL-**

Month Day Year

This affidavit does not take the place of the "Notice of Classification" or the "Total Amount of Uncompleted Contracts" issued by the State of New Jersey, both of which must be submitted with the bid package of each bidder.

PREVAILING WAGES CERTIFICATION

Title of Bid

New Hopkings Gymnasium, and Addition & Alteration to J.F. Tatem ES

Cont. No. **25.14** Bid Date **September 17, 2026**

It is the determination of the Board of Education that this is a public works project that in total will exceed $2,000.00 (two thousand dollars), therefore prevailing wages rules and regulations apply as promulgated by the New Jersey Prevailing Wage Act and in conformance with N.J.S.A. 34:11-56:25.

CERTIFICATION

1. I certify that our company understands that this project of the Board of Education requires prevailing wages to be paid in full accordance with the law.

1. I further certify that all subcontractors named in this bid understand that this project requires the subcontractor to pay prevailing wages in full accordance with the law.

NOTIFICATION OF VIOLATIONS – New Jersey Department of Labor

Has the bidder or any person having an "interest" with the bidder, been notified by the New Jersey Department of Labor by notice issued pursuant to N.J.S.A. 34:11-56:37 that he/she has been in violation for failure to pay prevailing wages as required by the New Jersey Prevailing Wage Act within the last five (5) years?

* Yes _____ No _____

*If yes, please attach a signed document explaining any/or all administrative proceedings with the NJDOL within the last five (5) years.

Please include any pending administrative proceedings with the NJ Department of Labor, if any.

Submission of Certified Payroll Records

All certified payroll records are to be submitted to the person named below who is coordinating the activities for the project:

_____

Barbara Noble
Haddonfield Board of Education

Name of Company_____

Authorized Agent_____

Authorized Signature_____

STOCKHOLDER/PARTNERSHIP DISCLOSURE AND STATEMENT OF OWNERSHIP

New Hopkins Gymnasium, and Addition & Alterations to J.F. Tatem ES

No corporation, partnership or limited liability company, shall be awarded any contract nor shall any agreement be entered into for the performance of any work or the furnishing of any material or supplies, the cost of which is to be paid with or out of any public funds, by the State or any county, municipality or school district, or any subsidiary or agency of the State, or by an authority, board or commission which exercises governmental functions, unless prior to the receipt of the bid or accompanying the bid of said corporation, said partnership, said limited liability company, there is submitted a statement setting forth the names and addresses of all stockholders in the corporation who own 10 percent or more of its stock of any class, or of all individual partners in the partnership who own a 10 percent or greater interest therein, or of all members in the limited liability company who own a 10 percent or greater interest therein, as the case may be. If one or more such stockholder, partner or member is itself a corporation or partnership or limited liability company, the stockholder holding 10 percent or more of that corporation's stock or the individual partners owning 10 percent or greater interest in that partnership, or the members owning 10 percent or greater interest in that limited liability company as the case may be, shall also be listed. The disclosure shall be, continued until names and addresses of every non-corporate stockholder, and individual partner, and member exceeding the 10 percent ownership criteria established in this act, has been listed.

Please check one type of Ownership, complete the form, and execute where provided.

☐ Corporation-- ☐ Limited Partnership--

☐ Partnership-- ☐ Limited Liability Company--

☐ Sole Proprietorship-- ☐ Limited Liability Partnership--

☐ Sub Chapter S Corp.-- ☐ Other-_____

IT IS MANDATORY THAT THIS FORM BE COMPLETED AND SUBMITTED WITH BID/PROPOSAL. In the event that there are no persons who own ten percent or more of the stock or ownership of the bidder, then such fact should be certified below as part of this disclosure.

Name of Company _____

List of Owners with Ten Percent (10%) or More Interest

Owner's Name	Home Address

NOTE: If you need more space than that provided above, please use an extra sheet for furnishing the above required information for any remaining persons or entities.

Signature _____ ***Date*** _____

This form shall be completed, signed and submitted with the bid/proposal. The form continues on the next page.

STOCKHOLDER/PARTNERSHIP DISCLOSURE AND STATEMENT OF OWNERSHIP (cont.)

If your firm is not a corporation and/or partnership, please explain below how your firm is organized and include a list of the various principals.

Our firm, _____ , is organized

_____

_____

Names of Principals Title

_____

_____

_____

Use additional paper if needed. Check here ☐ if additional sheets are attached.

Name of Company_____

Address_____

City, State, Zip_____

Authorized Agent_____Title _____

_____

SIGNATURE OF AUTHORIZED AGENT

This form shall be completed, signed and submitted with the bid/proposal.

SUBCONTRACTOR'S DISCLOSURE FORM

New Hopkings Gymnasium, and Addition & Alteration to J.F. Tatem ES

Cont. No. **25.14** Bid Date **September 17, 2026**

The _____ *(Name of Bidding Company)*

Please Check One! _____ will sub-contract a portion of this project.
_____ will not sub-contract any portion of this project.

Authorized Agent _____**Title**_____

Signature of Bidder _____**Date**_____

If the bidder is not going to subcontract any portion of this project, the bidder need not complete any further part of this document.

If the bidder will subcontract any of the following:

- Plumbing/gas fitting work;
- Structural steel/ornamental iron work
- Electrical work, tele-data, fire alarm or security systems
- Refrigeration/heating/ventilating systems & equipment

the bidder must do the following:

- Identify the contract number and type of work he intends to subcontract;
- Provide the name, address and other pertinent information about the subcontractor;*
- If the cost of the work by the subcontractor shall exceed the amounts listed below, the bidder shall provide in the bid package submission the following documents:

SUBCONTRACTOR DOCUMENT SUBMISSIONS		
Estimated Value of Contract – Subcontractor	*For Subcontractors in the four major branches listed above*	*For all other Subcontractors*
	Submit With Bid	**Submit Within ten (10 Days of Receipt of Notice of Award**
$2,000 through $5,999	Contractor's Registration Certificate	
$6,000 through $17,499	Contractor's Registration Certificate New Jersey Business Registration Certificate	
$17,500 through $19,999	Contractor's Registration Certificate New Jersey Business Registration Certificate Chapter 271 Political Contribution Disclosure Form	
$20,000 or more	Contractor's Registration Certificate New Jersey Business Registration Certificate Chapter 271 Political Contribution Disclosure Form Notice of Classification Total Amount of Uncompleted Contracts -- Certified	

Please list subcontractor(s) on the following pages. Bidders may make extra copies of the following pages.
** Failure to identify the names and addresses of any subcontractors required to be named in the bid, or to submit the appropriate documents for each such subcontractor, may be cause for the bid to be rejected as being non-responsive.*

(Form continued on next page)

Subcontractor's Disclosure Statement (Continued)

New Hopkings Gymnasium, and Addition & Alteration to J.F. Tatem ES

Cont. No. **25.14** Bid Date **September 17, 2026**

Name of Trade/Type of Work _____

Name of Subcontracting Company _____

Address _____

City, State, Zip _____

Telephone _____ Fax _____

E-Mail _____ FEIN No:_____

Authorized Agent _____ Title _____

Will the cost of sub-contract exceed $20,000.00?

_____ Yes Estimated Value of Contract $ _____

_____ No Estimated Value of Contract $ _____

If checked **yes**, the sub-contractor must be pre-qualified to perform the work. The bidder must provide in the bid package the following:

- The subcontractor's Notice of Classification;
- The subcontractor's Total Amount of Uncompleted Contracts; and
- Other documents that are required:

SUBCONTRACTOR DOCUMENT SUBMISSIONS		
Estimated Value of Contract – Subcontractor	*For Subcontractors in the four major branches listed above*	*For all other Subcontractors*
	Submit With Bid	**Submit Within ten (10 Days of Receipt of Notice of Award**
$2,000 through $5,999	Contractor's Registration Certificate	
$6,000 through $17,499	Contractor's Registration Certificate New Jersey Business Registration Certificate	
$17,500 through $19,999	Contractor's Registration Certificate New Jersey Business Registration Certificate Chapter 271 Political Contribution Disclosure Form	
$20,000 or more	Contractor's Registration Certificate New Jersey Business Registration Certificate Chapter 271 Political Contribution Disclosure Form Notice of Classification Total Amount of Uncompleted Contracts -- Certified	

APPENDIX A

AMERICANS WITH DISABILITIES ACT OF 1990
Equal Opportunity for Individuals with Disability

The contractor and the Board of Education (hereafter "owner") do hereby agree that the provisions of Title 11 of the Americans With Disabilities Act of 1990 (the "Act") (42 U.S.C. S121 01 et seq.), which prohibits discrimination on the basis of disability by public entities in all services, programs, and activities provided or made available by public entities, and the rules and regulations promulgated pursuant there unto, are made a part of this contract. In providing any aid, benefit, or service on behalf of the owner pursuant to this contract, the contractor agrees that the performance shall be in strict compliance with the Act. In the event that the contractor, its agents, servants, employees, or subcontractors violate or are alleged to have violated the Act during the performance of this contract, the contractor shall defend the owner in any action or administrative proceeding commenced pursuant to this Act. The contractor shall indemnify, protect, and save harmless the owner, its agents, servants, and employees from and against any and all suits, claims, losses, demands, or damages, of whatever kind or nature arising out of or claimed to arise out of the alleged violation. The contractor shall, at its own expense, appear, defend, and pay any and all charges for legal services and any and all costs and other expenses arising from such action or administrative proceeding or incurred in connection therewith. In any and all complaints brought pursuant to the owner's grievance procedure, the contractor agrees to abide by any decision of the owner which is rendered pursuant to said grievance procedure. If any action or administrative proceeding results in an award of damages against the owner, or if the owner incurs any expense to cure a violation of the ADA which has been brought pursuant to its grievance procedure, the contractor shall satisfy and discharge the same at its own expense.

The owner shall, as soon as practicable after a claim has been made against it, give written notice thereof to the contractor along with full and complete particulars of the claim, If any action or administrative proceeding is brought against the owner or any of its agents, servants, and employees, the *owner shall* expeditiously forward or have forwarded to the contractor every demand, complaint, notice, summons, pleading, or other process received by the owner or its representatives.

It is expressly agreed and understood that any approval by the owner of the services provided by the contractor pursuant to this contract will not relieve the contractor of the obligation to comply with the Act and to defend, indemnify, protect, and save harmless the owner pursuant to this paragraph.

It is further agreed and understood that the owner assumes no obligation to indemnify or save harmless the contractor, its agents, servants, employees and subcontractors for any claim which may arise out of their performance of this Agreement. Furthermore, the contractor expressly understands and agrees that the provisions of this indemnification clause shall in no way limit the contractor's obligations assumed in this Agreement, nor shall they be construed to relieve the contractor from any liability, nor preclude the owner from taking any other actions available to it under any other provisions of the Agreement or otherwise at law.

_____
Initial On Above Line

EXHIBIT B

MANDATORY EQUAL EMPLOYMENT OPPORTUNITY LANGUAGE
N.J.S.A. 10:5-31 et seq. (P.L.1975, c.127)
N.J.A.C. 17:27-1.1 et seq.
CONSTRUCTION CONTRACTS

During the performance of this contract, the contractor agrees as follows:

The contractor or subcontractor, where applicable, will not discriminate against any employee or applicant for employment because of age, race, creed, color, national origin, ancestry, marital status, affectional or sexual orientation, gender identity or expression, disability, nationality or sex. Except with respect to affectional or sexual orientation and gender identity or expression, the contractor will ensure that equal employment opportunity is afforded to such applicants in recruitment and employment, and that employees are treated during employment, without regard to their age, race, creed, color, national origin, ancestry, marital status, affectional or sexual orientation, gender identity or expression, disability, nationality or sex. Such equal employment opportunity shall include, but not be limited to the following: employment, upgrading, demotion, or transfer; recruitment or recruitment advertising; layoff or termination; rates of pay or other forms of compensation; and selection for training, including apprenticeship. The contractor agrees to post in conspicuous places, available to employees and applicants for employment, notices to be provided by the Public Agency Compliance Officer setting forth provisions of this nondiscrimination clause.

The contractor or subcontractor, where applicable will, in all solicitations or advertisements for employees placed by or on behalf of the contractor, state that all qualified applicants will receive consideration for employment without regard to age, race, creed, color, national origin, ancestry, marital status, affectional or sexual orientation, gender identity or expression, disability, nationality or sex.

The contractor or subcontractor will send to each labor union, with which it has a collective bargaining agreement, a notice, to be provided by the agency contracting officer, advising the labor union or workers' representative of the contractor's commitments under this act and shall post copies of the notice in conspicuous places available to employees and applicants for employment.

The contractor or subcontractor, where applicable, agrees to comply with any regulations promulgated by the Treasurer, pursuant to N.J.S.A. 10:5-31 et seq., as amended and supplemented from time to time and the Americans with Disabilities Act.

When hiring or scheduling workers in each construction trade, the contractor or subcontractor agrees to make good faith efforts to employ minority and women workers in each construction trade consistent with the targeted employment goal prescribed by N.J.A.C. l7:27-7.2; provided, however, that the Dept. of LWD, Construction EEO Monitoring Program, may, in its discretion, exempt a contractor or subcontractor from compliance with the good faith procedures prescribed by the following provisions, A, B, and C, as long as the Dept. of LWD, Construction EEO Monitoring Program is satisfied that the contractor or subcontractor is employing workers provided by a union which provides evidence, in accordance with standards prescribed by the Dept. of LWD, Construction EEO Monitoring Program, that its percentage of active “card carrying” members who are minority and women workers is equal to or greater than the targeted employment goal established in accordance with N.J.A.C. 17:27-7.2. The contractor or subcontractor agrees that a good faith effort shall include compliance with the following procedures:

(A) If the contractor or subcontractor has a referral agreement or arrangement with a union for a construction trade, the contractor or subcontractor shall, within three business days of the contract award, seek assurances from the union that it will cooperate with the contractor or subcontractor as it fulfills its affirmative action obligations under this contract and in accordance with the rules promulgated by the Treasurer pursuant to N.J.S.A. 10:5-31 et. seq., as supplemented and amended from time to time and the Americans with Disabilities Act. If the contractor or subcontractor is unable to obtain said assurances from the construction trade union at least five business days prior to the commencement of construction work, the contractor or subcontractor agrees to afford equal employment opportunities minority and women workers directly, consistent with this chapter. If the contractor's or subcontractor's prior experience with a construction trade union, regardless of whether the union has provided said assurances, indicates a significant possibility that the trade union will not refer sufficient minority and women workers consistent with affording equal employment opportunities as specified in this chapter, the contractor or subcontractor agrees to be prepared to provide such opportunities to minority and women workers directly, consistent with this chapter, by complying with the hiring or scheduling procedures prescribed under (B) below; and the contractor or subcontractor further agrees to take said action immediately if it determines that the union is not referring minority and women workers consistent with the equal employment opportunity goals set forth in this chapter.

(B) If good faith efforts to meet targeted employment goals have not or cannot be met for each construction trade by adhering to the procedures of (A) above, or if the contractor does not have a referral agreement or arrangement with a union for a construction trade, the contractor or subcontractor agrees to take the following actions:

(l) To notify the public agency compliance officer, the Dept. of LWD, Construction EEO Monitoring Program, and minority and women referral organizations listed by the Division pursuant to N.J.A.C. 17:27-5.3, of its workforce needs, and request referral of minority and women workers;

(2) To notify any minority and women workers who have been listed with it as awaiting available vacancies;

(3) Prior to commencement of work, to request that the local construction trade union refer minority and women workers to fill job openings, provided the contractor or subcontractor has a referral agreement or arrangement with a union for the construction trade;

(4) To leave standing requests for additional referral to minority and women workers with the local construction trade union, provided the contractor or subcontractor has a referral agreement or arrangement with a union for the construction trade, the State Training and Employment Service and other approved referral sources in the area;

(5) If it is necessary to lay off some of the workers in a given trade on the construction site, layoffs shall be conducted in compliance with the equal employment opportunity and nondiscrimination standards set forth in this regulation, as well as with applicable Federal and State court decisions;

(6) To adhere to the following procedure when minority and women workers apply or are referred to the contractor or subcontractor:

(i) The contactor or subcontractor shall interview the referred minority or women worker.

(ii) If said individuals have never previously received any document or certification signifying a level of qualification lower than that required in order to perform the work of the construction trade, the contractor or subcontractor shall in good faith determine the qualifications of such individuals. The contractor or subcontractor shall hire or schedule those individuals who satisfy appropriate qualification standards in conformity with the equal employment opportunity and non-discrimination principles set forth in this chapter. However, a contractor or subcontractor shall determine that the individual at least possesses the requisite skills, and experience recognized by a union, apprentice program or a referral agency, provided the referral agency is acceptable to the Dept. of LWD, Construction EEO Monitoring Program. If necessary, the contractor or subcontractor shall hire or schedule minority and women workers who qualify as trainees pursuant to these rules. All of the requirements, however, are limited by the provisions of (C) below.

(iii) The name of any interested women or minority individual shall be maintained on a waiting list, and shall be considered for employment as described in (i) above, whenever vacancies occur. At the request of the Dept. of LWD, Construction EEO Monitoring Program, the contractor or subcontractor shall provide evidence of its good faith efforts to employ women and minorities from the list to fill vacancies.

(iv) If, for any reason, said contractor or subcontractor determines that a minority individual or a woman is not qualified or if the individual qualifies as an advanced trainee or apprentice, the contractor or subcontractor shall inform the individual in writing of the reasons for the determination, maintain a copy of the determination in its files, and send a copy to the public agency compliance officer and to the Dept. of LWD, Construction EEO Monitoring Program.

(7) To keep a complete and accurate record of all requests made for the referral of workers in any trade covered by the contract, on forms made available by the Dept. of LWD, Construction EEO Monitoring Program and submitted promptly to the Dept. of LWD, Construction EEO Monitoring Program upon request.

(C) The contractor or subcontractor agrees that nothing contained in (B) above shall preclude the contractor or subcontractor from complying with the union hiring hall or apprenticeship policies in any applicable collective bargaining agreement or union hiring hall arrangement, and, where required by custom or agreement, it shall send journeymen and trainees to the union for referral, or to the apprenticeship program for admission, pursuant to such agreement or arrangement. However, where the practices of a union or apprenticeship program will result in the exclusion of minorities and women or the failure to refer minorities and women consistent with the targeted county employment goal, the contractor or subcontractor shall consider for employment persons referred pursuant to (B) above without regard to such agreement or arrangement; provided further, however, that the contractor or subcontractor shall not be required to employ women and minority advanced trainees and trainees in numbers which result in the employment of advanced trainees and trainees as a percentage of the total workforce for the construction trade, which percentage significantly exceeds the apprentice to journey worker ratio specified in the applicable collective bargaining agreement, or in the absence of a collective bargaining agreement, exceeds the ratio established by practice in the area for said construction trade. Also, the contractor or subcontractor agrees that, in implementing the procedures of (B) above, it shall, where applicable, employ minority and women workers residing within the geographical jurisdiction of the union.

EXHIBIT B (Continued)

After notification of award, but prior to signing a construction contract, the contractor shall submit to the public agency compliance officer and the Dept. of LWD, Construction EEO Monitoring Program an initial project workforce report (Form AA-201) electronically provided to the public agency by the Dept. of LWD, Construction EEO Monitoring Program, through its website, for distribution to and completion by the contractor, in accordance with N.J.A.C. 17:27-7. The contractor also agrees to submit a copy of the Monthly Project Workforce Report once a month thereafter for the duration of this contract to the Dept. of LWD, Construction EEO Monitoring Program, and to the public agency compliance officer.

The contractor agrees to cooperate with the public agency in the payment of budgeted funds, as is necessary, for on-the-job and/or off-the job programs for outreach and training of minorities and women.

(D) The contractor and its subcontractors shall furnish such reports or other documents to the Dept. of LWD, Construction EEO Monitoring Program as may be requested by the Dept. of LWD, Construction EEO Monitoring Program from time to time in order to carry out the purposes of these regulations, and public agencies shall furnish such information as may be requested by the Dept. of LWD, Construction EEO Monitoring Program for conducting a compliance investigation pursuant to N.J.A.C. 17:27-1.1 et seq.

_____

Initial On Above Line

FORM AA-201
Revised 11/11

STATE OF NEW JERSEY

DEPARTMENT OF LABOR & WORKFORCE DEVELOPMENT
CONSTRUCTION EEO COMPLIANCE MONITORING PROGRAM

INITIAL PROJECT WORKFORCE REPORT CONSTRUCTION

Official Use Only
Assignment
Code

For instructions on completing the form, go to: http://www.state.nj.us/treasury/contract_compliance/pdf/aa201ins.pdf

1. FID NUMBER
2. CONTRACTOR ID NUMBER
3. NAME AND ADDRESS OF PRIME CONTRACTOR
(Name)
(Street Address)
(City) (State) (Zip Code)
4. IS THIS COMPANY MINORITY OWNED [ ] OR WOMAN OWNED [ ]
5. NAME AND ADDRESS OF PUBLIC AGENCY AWARDING CONTRACT
Name:
Address:
CONTRACT NUMBER DATE OF AWARD DOLLAR AMOUNT OF AWARD
6. NAME AND ADDRESS OF PROJECT
Name:
Address:
COUNTY
7. PROJECT NUMBER
8. IS THIS PROJECT COVERED BY A PROJEC LABOR AGREEMENT (PLA)? YES

9. TRADE OR CRAFT	PROJECTED TOTAL EMPLOYEES				PROJECTED MINORITY EMPLOYEES				PROJECTED PHASE - IN DATE	PROJECTED COMPLETION DATE
	MALE		FEMALE		MALE		FEMALE			
	J	AP	J	AP	J	AP	J	AP		
1. ASBESTOS WORKER										
2. BRICKLAYER OR MASON										
3. CARPENTER										
4. ELECTRICIAN										
5. GLAZIER										
6. HVAC MECHANIC										
7. IRONWORKER										
8. OPERATING ENGINEER										
9. PAINTER										
10. PLUMBER										
11. ROOFER										
12. SHEET METAL WORKER										
13. SPRINKLER FITTER										
14. STEAMFITTER										
15. SURVEYOR										
16. TILER										
17. TRUCK DRIVER										
18. LABORER										
19. OTHER										
20. OTHER										

Sample -- AA201

I hereby certify that the foregoing statements made by me are true. I am aware that if any of the foregoing statements are willfully false, I am subject to punishment.

(Signature)

10. (Please Print Your Name) (Title)

(Area Code) (Telephone Number) (Ext.) (Date)

INSTRUCTIONS FOR COMPLETING THE INITIAL PROJECT

WORKFORCE REPORT – CONSTRUCTION (AA201)

DO NOT COMPLETE THIS FORM FOR GOODS AND/OR SERVICE CONTRACTS

1. **Enter the Federal Identification Number assigned to the contractor by the Internal Revenue Service, or if a Federal Employer Identification Number has been applied for but not yet issued, or if your business is such that you have not or will not receive a Federal Identification Number, enter the social security number assigned to the single owner or one partner, in the case of a partnership.**

2. **Note: The Department of Labor & Workforce Development, Construction EEO Monitoring Program will assign a contractor ID number to your company. This number will be your permanently assigned contractor ID number that must be on all correspondence and reports submitted to this office.**

3. **Enter the prime contractor's name, address and zip code number.**

4. **Check box if Company is Minority Owned or Woman Owned**

5. **Enter the complete name and address of the Public Agency awarding the contract.**
   Include the contract number, date of award and dollar amount of the contract.

6. **Enter the name and address of the project, including the county in which the project is located.**

7. **Note: A project contract ID number will be assigned to your firm upon receipt of the completed Initial Project Workforce Report (AA201) for this contract. This number must be indicated on all correspondence and reports submitted to this office relating to this contract.**

8. **Check "Yes" or "No" to indicate whether a Project Labor Agreement (PLA) was established with the labor organization(s) for this project.**

9. **Under the Projected Total Number of Employees in each trade or craft and at each level of classification, enter the total composite workforce of the prime contractor and all subcontractors projected to work on the project. Under Projected Employees enter total minority and female employees of the prime contractor and all subcontractors projected to work on the project. Minority employees include Black, Hispanic, American Indian and Asian, (J=Journeyworker, AP=Apprentice). Include projected phase-in and completion dates.**

10. **Print or type the name of the company official or authorized Equal Employment Opportunity (EEO) official include signature and title, phone number and date the report is submitted.**

This report must be submitted to the Public Agency that awards the contract and the Department of Labor & Workforce Development, Construction EEO Compliance Monitoring Program after notification of award, but prior to signing the contract.

THE CONTRACTOR IS TO RETAIN A COPY AND SUBMIT COPY TO THE PUBLIC AGENCY AWARDING THE CONTRACT AND FORWARD A COPY TO:

NEW JERSEY DEPARTMENT OF LABOR & WORKFORCE DEVELOPMENT
CONSTRUCTION EEO COMPLIANCE MONITORING UNIT
P.O. BOX 209
TRENTON, NJ 08625-0209
(609) 292-9550

Haddonfield Board of Education

Appendix Section

A. Model Performance Bond Form - *Sample*

B. Surety Disclosure Statement and Certification - *Sample*

Model Performance Bond Form

N.J.S.A. 2A:44-147

SAMPLE

2A:44-147. The bond required by this article shall be in substantially the following form:

"Know all men by these presents, that we, the undersigned as principal and as sureties, are hereby held and firmly bound unto in the penal sum of dollars, for the payment of which well and truly to be made, we hereby jointly and severally bind ourselves, our heirs, executors, administrators, successors and assigns.

"Signed this _____ day of _____ , 20____

"The condition of the above obligation is such that whereas, the above named principal did on the _____ day of _____, 20 _____, enter into a contract with , which said contract is made a part of this the bond the same as though set forth herein;

"Now, if the said _____ shall well and faithfully do and perform the things agreed by _____ to be done and performed according to the terms of said contract, and shall pay all lawful claims of beneficiaries as defined by N.J.S.2A:44-143 for labor performed or materials, provisions, provender or other supplies or teams, fuels, oils, implements or machinery furnished, used or consumed in the carrying forward, performing or completing of said contract, we agreeing and assenting that this undertaking shall be for the benefit of any beneficiary as defined in N.J.S.2A:44-143 having a just claim, as well as for the oblige herein; then this obligation shall be void; otherwise the same shall remain in full force and effect; it being expressly understood and agreed that the liability of the surety for any and all claims hereunder shall in no event exceed the penal amount of this obligation as herein stated.

"The said surety hereby stipulates and agrees that no modifications, omissions or additions in or to the terms of the said contract or in or to the plans or specifications therefor shall in anywise affect the obligation of said surety on its bond."

Recovery of any claimant under the bond shall be subject to the conditions and provisions of this article to the same extent as if such conditions and provisions were fully incorporated in the form set forth above.

L.1951 (1st SS), c.344; amended 1996, c.81, s.6.

Surety Disclosure Statement and Certification

N.J.S. A. 2A:44-143

SAMPLE

SURETY DISCLOSURE STATEMENT AND CERTIFICATION

_____, surety(ies) on the attached bond, hereby certifies(y) the following:

(1) The surety meets the applicable capital and surplus requirements of R.S.17:17-6 or R.S.17:17-7 as of the surety's most current annual filing with the New Jersey Department of Insurance.

(2) The capital (where applicable) and surplus, as determined in accordance with the applicable laws of this State, of the surety(ies) participating in the issuance of the attached bond is (are) in the following amount(s) as of the calendar year ended December 31, ... (most recent calendar year for which capital and surplus amounts are available), which amounts have been certified as indicated by certified public accountants (indicating separately for each surety that surety's capital and surplus amounts, together with the name and address of the firm of certified public accounts that shall have certified those amounts):

_____

_____

_____

(3) (a) With respect to each surety participating in the issuance of the attached bond that has received from the United States Secretary of the Treasury a certificate of authority pursuant to 31 U.S.C. 9305, the underwriting limitation established therein and the date as of which that limitation was effective is as follows (indicating for each such surety that surety's underwriting limitation and the effective date thereof):

_____

_____

_____

(b) With respect to each surety participating in the issuance of the attached bond that has not received such a certificate of authority from the United States Secretary of the Treasury, the underwriting limitation of that surety as established pursuant to R.S.17:18-9 as of (date on which such limitation was so established) is as follows (indicating for each such surety that surety's underwriting limitation and the date on which that limitation was established):

_____

_____

_____

(4) The amount of the bond to which this statement and certification is attached is $ _____

(5) If, by virtue of one or more contracts of reinsurance, the amount of the bond indicated under item (4) above exceeds the total underwriting limitation of all sureties on the bond as set forth in items (3)(a) or (3)(b) above, or both, then for each such contract of reinsurance:

(a) The name and address of each such reinsurer under that contract and the amount of that reinsurer's participation in the contract is as follows_____

_____

_____

_____and

(b) Each surety that is party to any such contract of reinsurance certifies that each reinsurer listed under item (5)(a) satisfies the credit for reinsurance requirement established under P.L.1993, c.243 (C.17:51B-1 et seq.) and any applicable regulations in effect as of the date on which the bond to which this statement and certification is attached shall have been filed with the appropriate public agency.

CERTIFICATE

(to be completed by an authorized certifying agent

for each surety on the bond)

I _____(name of agent), as _____ (title of agent) for _____(name of surety), a corporation/mutual insurance company/other (indicating type of business organization) (circle one) domiciled in _____ (state of domicile), DO HEREBY CERTIFY that, to the best of my knowledge, the foregoing statements made by me are true, and ACKNOWLEDGE that, if any of those statements are false, this bond is VOIDABLE.

_____

(Signature of certifying agent)

_____

(Printed name of certifying agent)

_____

(Title of certifying agent)

L.1951 (1st SS), c.344; amended 1979, c.408; 1989, c.316; 1991, c.454; 1995, c.38, s.2; 1995, c.384, s.1; 1996, c.81, s.2.

TO All Bidders:

REMINDER!

Did you sign all of the bid documents?

All bid documents returned to the Board shall be signed with original signatures. Please try to use **blue ink.**

The Board will not accept facsimile or rubber stamp signatures.

Failure to sign and submit all bid documents may be cause for disqualification and rejection of the bid.

AIA® Document A101® – 2017

Standard Form of Agreement Between Owner and Contractor where the basis of payment is a Stipulated Sum

AGREEMENT made as of the xx day of September in the year Two Thousand Twenty-Six
(In words, indicate day, month and year.)

BETWEEN the Owner:
(Name, legal status, address and other information)

Haddonfield Board of Education
95 Grove Street
Haddonfield, NJ 08033

and the Contractor:
(Name, legal status, address and other information)

TBD

for the following Project:
(Name, location and detailed description)

Contract #25.14A – New Hopkins Gym
401 Kings Hwy E,
Haddonfield, NJ 08033

Contract #25.14B – Addition & Alterations to J.F. Tatem Elementary School
1 Glover Ave,
Haddonfield, NJ 08033

Contract #25.14C – New Hopkins Gym and Addition & Alterations to J.F. Tatem Elementary School

401 Kings Hwy E,
Haddonfield, NJ 08033

1 Glover Ave,
Haddonfield, NJ 08033

The Architect:
(Name, legal status, address and other information)

LAN Associates, Engineering, Planning, Architecture, Surveying, Inc.
1018 Laurel Oak Road, Suite 11
Voorhees, NJ 08043

The Owner and Contractor agree as follows.

ADDITIONS AND DELETIONS: The author of this document may have revised the text of the original AIA standard form. An *Additions and Deletions Report* that notes revisions to the standard form text is available from the author and should be reviewed. A vertical line in the left margin of this document indicates where the author has added to or deleted from the original AIA text.

This document has important legal consequences. Consultation with an attorney is encouraged with respect to its completion or modification.

The parties should complete A101®–2017, Exhibit A, Insurance and Bonds, contemporaneously with this Agreement. AIA Document A201®–2017, General Conditions of the Contract for Construction, is adopted in this document by reference. Do not use with other general conditions unless this document is modified.

ELECTRONIC COPYING of any portion of this AIA® Document to another electronic file is prohibited and constitutes a violation of copyright laws as set forth in the footer of this document.

AIA Document A101 – 2017. Copyright © 1915, 1918, 1925, 1937, 1951, 1958, 1961, 1963, 1967, 1974, 1977, 1987, 1991, 1997, 2007 and 2017. All rights reserved. "The American Institute of Architects," "American Institute of Architects," "AIA," the AIA Logo, and "AIA Contract Documents" are trademarks of The American Institute of Architects. This draft was produced at 16:23:27 EDT on 04/14/2025 under Subscription No.20240074275 which expires on 01/22/2026, is not for resale, is licensed for one-time use only, and may only be used in accordance with the AIA Contract Documents® Terms of Service. To report copyright violations, e-mail docinfo@aiacontracts.com.
User Notes: (67fd6eb75218b82068b6b9e4)

TABLE OF ARTICLES

1 THE CONTRACT DOCUMENTS

2 THE WORK OF THIS CONTRACT

3 DATE OF COMMENCEMENT AND SUBSTANTIAL COMPLETION

4 CONTRACT SUM

5 PAYMENTS

6 DISPUTE RESOLUTION

7 TERMINATION OR SUSPENSION

8 MISCELLANEOUS PROVISIONS

9 ENUMERATION OF CONTRACT DOCUMENTS

EXHIBIT A INSURANCE AND BONDS

ARTICLE 1 THE CONTRACT DOCUMENTS

The Contract Documents consist of this Agreement, Conditions of the Contract (General, Supplementary, and other Conditions), Drawings, Specifications, Addenda issued prior to execution of this Agreement, other documents listed in this Agreement, and Modifications issued after execution of this Agreement, all of which form the Contract, and are as fully a part of the Contract as if attached to this Agreement or repeated herein. The Contract represents the entire and integrated agreement between the parties hereto and supersedes prior negotiations, representations, or agreements, either written or oral. An enumeration of the Contract Documents, other than a Modification, appears in Article 9.

ARTICLE 2 THE WORK OF THIS CONTRACT

The Contractor shall fully execute the Work described in the Contract Documents, except as specifically indicated in the Contract Documents to be the responsibility of others.

ARTICLE 3 DATE OF COMMENCEMENT AND SUBSTANTIAL COMPLETION

§ 3.1 The date of commencement of the Work shall be:
(Check one of the following boxes.)

[**X**] The date of this Agreement.

[ ] A date set forth in a notice to proceed issued by the Owner.

[ ] Established as follows:
(Insert a date or a means to determine the date of commencement of the Work.)

If a date of commencement of the Work is not selected, then the date of commencement shall be the date of this Agreement.

§ 3.2 The Contract Time shall be measured from the date of commencement of the Work.

§ 3.3 Substantial Completion

§ 3.3.1 Subject to adjustments of the Contract Time as provided in the Contract Documents, the Contractor shall achieve Substantial Completion of the entire Work:
(Check one of the following boxes and complete the necessary information.)

[ ] Not later than ( ) calendar days from the date of commencement of the Work.

AIA Document A101 – 2017. Copyright © 1915, 1918, 1925, 1937, 1951, 1958, 1961, 1963, 1967, 1974, 1977, 1987, 1991, 1997, 2007 and 2017. All rights reserved. "The American Institute of Architects," "American Institute of Architects," "AIA," the AIA Logo, and "AIA Contract Documents" are trademarks of The American Institute of Architects. This draft was produced at 16:23:27 EDT on 04/14/2025 under Subscription No.20240074275 which expires on 01/22/2026, is not for resale, is licensed for one-time use only, and may only be used in accordance with the AIA Contract Documents® Terms of Service. To report copyright violations, e-mail docinfo@aiacontracts.com.
User Notes: (67fd6eb75218b82068b6b9e4)

[X] By the following date: **Thursday, December 23, 2027 (Tatem ES)**
Friday, March 3, 2028 (Hopkins Gym)

§ 3.3.2 Subject to adjustments of the Contract Time as provided in the Contract Documents, if portions of the Work are to be completed prior to Substantial Completion of the entire Work, the Contractor shall achieve Substantial Completion of such portions by the following dates:

Portion of Work	Substantial Completion Date
Tatem ES	Thursday, December 23, 2027
Hopkins Gym	Friday, March 3, 2028

§ 3.3.3 If the Contractor fails to achieve Substantial Completion as provided in this Section 3.3, liquidated damages, if any, shall be assessed as set forth in Section 4.5.

ARTICLE 4 CONTRACT SUM

§ 4.1 The Owner shall pay the Contractor the Contract Sum in current funds for the Contractor's performance of the Contract. The Contract Sum shall be TBD ($ TBD), subject to additions and deductions as provided in the Contract Documents.

§ 4.2 Alternates

§ 4.2.1 Alternates, if any, included in the Contract Sum:

Item	Price
ADD Alternate No.1: Landscaping (HG)	$
ADD Alternate No.2: Iron Fence Restoration (HG)	$

§ 4.2.2 Subject to the conditions noted below, the following alternates may be accepted by the Owner following execution of this Agreement. Upon acceptance, the Owner shall issue a Modification to this Agreement.
(Insert below each alternate and the conditions that must be met for the Owner to accept the alternate.)

Item	Price	Conditions for Acceptance
Not Applicable	Not Applicable	Not Applicable

§ 4.3 Allowances, if any, included in the Contract Sum:
(Identify each allowance.)

Item	Price
Contract A (HG) - Allowance No. 1– Unforeseen Conditions	$125,000.00
Contract B (TES) - Allowance No. 1– Unforeseen Conditions	$175,000.00
Contract C - Allowance No. 1– Unforeseen Conditions	$300,000.00

§ 4.4 Unit prices, if any: NOT APPLICABLE
(Identify the item and state the unit price and quantity limitations, if any, to which the unit price will be applicable.)

Item	Units and Limitations	Price per Unit ($0.00)
Unit Price No.1 (HG): Selective Asphalt Sub-Base Repair	SF	$

AIA Document A101 – 2017. Copyright © 1915, 1918, 1925, 1937, 1951, 1958, 1961, 1963, 1967, 1974, 1977, 1987, 1991, 1997, 2007 and 2017. All rights reserved. "The American Institute of Architects," "American Institute of Architects," "AIA," the AIA Logo, and "AIA Contract Documents" are trademarks of The American Institute of Architects. This draft was produced at 16:23:27 EDT on 04/14/2025 under Subscription No.20240074275 which expires on 01/22/2026, is not for resale, is licensed for one-time use only, and may only be used in accordance with the AIA Contract Documents® Terms of Service. To report copyright violations, e-mail docinfo@aiacontracts.com.
User Notes: (67fd6eb75218b82068b6b9e4)

Unit Price No.2 (HG): Selective Asphalt Base Course Repair	SF	$

§ 4.5 Liquidated damages, if any:
(Insert terms and conditions for liquidated damages, if any.)

The Contractor understands and agrees that all work must be performed in an orderly and closely coordinated sequence so that the dates for Substantial Completion and Final Completion are met. TIME IS OF THE ESSENCE.

If the Contractor fails to complete his work or fails to complete a portion of his work and therefore not achieve Substantial Completion and/or Final Completion on the respective dates required, he shall pay the Owner, as liquidated damages and not as a penalty, One Thousand Dollars ($1,000.00) per day, which is agreed upon as a reasonable and proper measure which the Owner will sustain each calendar day by failure of the Contractor to complete work within the stipulated time for the milestone dates.

The Owner will suffer significant financial loss if the project is not substantially complete on time. Liquidated Damages will be assessed if the Project is not substantially complete by **Thursday, December 23rd, 2027 (Tatem ES), & Friday, March 3, 2028 (Hopkins Gym)**. The Contractor (and the Contractor's Surety) shall be liable for and pay to the Owner the sum of $1,000.00 stipulated and fixed, agreed as liquidated damages for each calendar day of delay until the work is substantially complete.

Final Completion must be reached Thirty (30) days following the date fixed in the contract for Substantial Completion**.** The Contractor (and the Contractor's Surety) shall be liable for and pay to the Owner the sum of $1,000.00 stipulated and fixed, agreed as liquidated damages for each calendar day of delay until the work is finally complete

{**PER SCHEDULE IN SPECIFICATIONS**}

Substantial Completion will be determined by the Architect as defined in paragraph 9.8.1 of the General Conditions.

For damage occurring at the time of delay, the Owner may retain the amount due to him under this clause from any payments due to the Contractor.

§ 4.6 Other:
(Insert provisions for bonus or other incentives, if any, that might result in a change to the Contract Sum.)

Not Applicable

ARTICLE 5 PAYMENTS
§ 5.1 Progress Payments
§ 5.1.1 Based upon Applications for Payment submitted to the Architect by the Contractor and Certificates for Payment issued by the Architect, the Owner shall make progress payments on account of the Contract Sum to the Contractor as provided below and elsewhere in the Contract Documents. An application for Payment shall include all work performed in one calendar month.

§ 5.1.2 Contractor shall submit a Pencil Copy / Rough Draft of the Application for Payment to the Owner's Representative and Construction Manager for review no later than the 15 calendar days prior to the first Friday of the month payment is requested from Owner.

Owner's Representative and Construction Manager will review the Pencil Copy / Rough Draft of the Application for Payment and return to the Contractor within five (5) calendar days from their receipt of same.

§ 5.1.3 Certified Application for Payment.
.1. Within three (3) calendar days after receipt of accepted Pencil / Rough Draft of the Application for Payment the Contractor shall submit three (3) Certified Applications for Payment to the Owner's Representative for signatures.

AIA Document A101 – 2017. Copyright © 1915, 1918, 1925, 1937, 1951, 1958, 1961, 1963, 1967, 1974, 1977, 1987, 1991, 1997, 2007 and 2017. All rights reserved. "The American Institute of Architects," "American Institute of Architects," "AIA," the AIA Logo, and "AIA Contract Documents" are trademarks of The American Institute of Architects. This draft was produced at 16:23:27 EDT on 04/14/2025 under Subscription No.20240074275 which expires on 01/22/2026, is not for resale, is licensed for one-time use only, and may only be used in accordance with the AIA Contract Documents® Terms of Service. To report copyright violations, e-mail docinfo@aiacontracts.com.
User Notes: (67fd6eb75218b82068b6b9e4)

.2. The Owner's Representative shall sign the Certified Application for Payment within five (5) calendar days upon receipt and shall transmit one (1) Certified Application for Payment to Owner on the first Friday of the month payment is requested. The Owner's Representative shall transmit one (1) Certified Application for Payment to the Contractor and retain one (1) Certified Application for Payment for its records. (Federal, state or local laws may require payment within a certain period of time.)

§ 5.1.3.1 The form for Applications for Payment shall be a notarized AIA Document G702, Application and Certification for Payment, supported by AIA document G703 Continuation Sheets. Each Application for Payment must be accompanied by three (3) sets of Certified Payroll Records for the period covered by the Application. The payroll records shall indicate the proper classification of employees and the payment of overtime, if any. These records shall include each Contractor's subcontractor's certified payroll. Payment will not be authorized if the required payroll records have not been submitted.

§ 5.1.3.2 All Applications for Payment, Certified Payroll Records and Manning Reports shall include the relevant purchase order number and project number.

§ 5.1.3.3 Pursuant to N.J.S.A. 2A:30A-1, et seq. ("the Act"), the Owner is not required to approve the Contractor's Application for Payment until the next scheduled public meeting of the Board of Education following the Owner's receipt of the Architect's Certificate for Payment. Under said Act, the Owner shall not make payment to the Contractor for the payment amount until the Owner's subsequent payment cycle following its approval of the Application for Payment.

§ 5.1.3.4 Pursuant to the above Act, if a payment due pursuant to the provisions herein is not made in a timely manner, the Owner shall be liable for the amount of money owed under the Contract, plus interest at a rate equal to the prime rate plus one percent (1%), notwithstanding anything to the contrary in the Contract Documents. Interest on amounts due pursuant to the Act shall be paid to the prime Contractor for the period beginning on the day after the required payment date and ending on the day on which the check for payment is received by the Contractor.

§ 5.1.3.5 Disputes regarding whether a party has failed to make payments required by the Act must be submitted to a process of alternative dispute resolution, notwithstanding anything to the contrary in the Contract Documents. Alternative dispute resolution permitted by the Act shall apply to disputes over payment only and shall not apply to disputes concerning any other matters that may arise under or from this Contract. Any civil action brought to collect payments shall be conducted in Camden County, State of New Jersey, and the prevailing party shall be awarded reasonable costs and attorneys' fees. See Article 6 of this Agreement regarding Claims and Disputes.

§ 5.1.4 The Architect may decide to disapprove an Application for Payment, or withhold payment, in whole or in part, to the extent reasonably necessary to protect the Owner if, in the Architect's opinion, the representations as described in Section 5.1.4.1 below cannot be made to the Owner. If the Architect withholds a Certificate for Payment, the Architect will notify the Contractor and Owner as provided in Article 5 hereof. The Architect may also decide to withhold certifying payment in whole or in part, because of subsequently discovered evidence or subsequent observations, to such extent as may be necessary to protect the Owner from loss because of:

1. Defective Work which has not been remedied;
2. Third party claims filed or reasonable belief probable filing of such claims;
3. Failure of the Contractor to make payments properly to vendors, subcontractors or for labor, materials and equipment;
4. Reasonable evidence that the Work cannot be completed for the unpaid balance of the Contract sum;
5. Damage to the Owner or another contractor;
6. Reasonable evidence that the Work will not be completed within the Contract Time, and that the unpaid balance would not be adequate to cover actual or liquidated damages for the anticipated delay;
7. Failure to carry out the Work in accordance with the Contract Documents;
8. Avoidable delay in the progress of the Work;
9. Deliberate delay in the submission for approval of names of Subcontractors, material men, sources of supply, shop drawings and samples;
10. Failure to maintain the Project Site in a safe and satisfactory condition in accordance with good construction practices as recommended by the Architect after consultation with the Contractor; and
11. Failure to submit updates as requested by the District or as required by the General Conditions, attached hereto.

AIA Document A101 – 2017. Copyright © 1915, 1918, 1925, 1937, 1951, 1958, 1961, 1963, 1967, 1974, 1977, 1987, 1991, 1997, 2007 and 2017. All rights reserved. "The American Institute of Architects," "American Institute of Architects," "AIA," the AIA Logo, and "AIA Contract Documents" are trademarks of The American Institute of Architects. This draft was produced at 16:23:27 EDT on 04/14/2025 under Subscription No.20240074275 which expires on 01/22/2026, is not for resale, is licensed for one-time use only, and may only be used in accordance with the AIA Contract Documents® Terms of Service. To report copyright violations, e-mail docinfo@aiacontracts.com.
User Notes: (67fd6eb75218b82068b6b9e4)

When the foregoing reasons for withholding payment are resolved, certification will be made for amounts previously withheld in the manner set forth in Section 5.1.3 above.

§ 5.1.4.1 The issuance of a separate Certificate for Payment will constitute representations made separately by the Architect to the Owner, based on its individual observations at the Site and the data comprising the Application for Payment submitted by the Contractor, that the Work has progressed to the point indicated and that, to the best of the Architect's knowledge, information and belief, quality of the Work is in accordance with the Contract Documents. The foregoing representations are subject to an evaluation of the Work for conformance with the Contract Documents upon Substantial Completion, to results of subsequent tests and inspections, to minor deviations from the Contract Documents correctable prior to completion and to specific qualifications expressed by the Architect. The issuance of a separate Certificate for Payment will further constitute a representation that the Contactor is entitled to payment in the amount certified. However, the issuance of a separate Certificate for Payment will not be a representation that the Architect has: (1) made exhaustive or continuous on-site inspections to check the quality or quantity of the Work; (2) reviewed the Contractor's construction means, methods, techniques, sequences or procedures; (3) reviewed copies of requisitions received from Subcontractors and material suppliers and other data requested by the Owner to substantiate the Contractor's right to payment; or (4) made examination to ascertain how or for what purpose the Contractor has used money previously paid on account of the Contact Sum.

§ 5.1.4.2 Each Application for Payment shall be based on the most recent schedule of values submitted by the Contractor in accordance with the Contract Documents. The schedule of values shall allocate the entire Contract Sum among the various portions of the Work. The schedule of values shall be prepared in such form and supported by such data to substantiate its accuracy as the Architect may require. This schedule, unless objected to by the Architect promptly, shall be used as a basis for reviewing the Contractor's Applications for Payment.

§ 5.1.5 Applications for Payment shall show the percentage of completion of each portion of the Work as of the end of the period covered by the Application for Payment.

§ 5.1.6 In accordance with AIA Document A201™–2017, General Conditions of the Contract for Construction, and subject to other provisions of the Contract Documents, the amount of each progress payment shall be computed as follows:

§ 5.1.6.1 The amount of each progress payment shall first include:

- **.1** That portion of the Contract Sum properly allocable to completed Work;
- **.2** That portion of the Contract Sum properly allocable to materials and equipment delivered and suitably stored at the site for subsequent incorporation in the completed construction, or, if approved in advance by the Owner, suitably stored off the site at a location agreed upon in writing; and
- **.3** That portion of Construction Change Directives that the Architect determines, in the Architect's professional judgment, to be reasonably justified.

§ 5.1.6.2 The amount of each progress payment shall then be reduced by:

- **.1** The aggregate of any amounts previously paid by the Owner;
- **.2** The amount, if any, for Work that remains uncorrected and for which the Architect has previously withheld a Certificate for Payment as provided in Article 9 of AIA Document A201–2017;
- **.3** Any amount for which the Contractor does not intend to pay a Subcontractor or material supplier, unless the Work has been performed by others the Contractor intends to pay;
- **.4** For Work performed or defects discovered since the last payment application, any amount for which the Architect may withhold payment, or nullify a Certificate of Payment in whole or in part, as provided in Article 9 of AIA Document A201–2017; and
- **.5** Retainage withheld pursuant to Section 5.1.7.

§ 5.1.7 Retainage

§ 5.1.7.1 For each progress payment made prior to Substantial Completion of the Work, the Owner may withhold the following amount, as retainage, from the payment otherwise due:

(Insert a percentage or amount to be withheld as retainage from each Application for Payment. The amount of retainage may be limited by governing law.)

AIA Document A101 – 2017. Copyright © 1915, 1918, 1925, 1937, 1951, 1958, 1961, 1963, 1967, 1974, 1977, 1987, 1991, 1997, 2007 and 2017. All rights reserved. "The American Institute of Architects," "American Institute of Architects," "AIA," the AIA Logo, and "AIA Contract Documents" are trademarks of The American Institute of Architects. This draft was produced at 16:23:27 EDT on 04/14/2025 under Subscription No.20240074275 which expires on 01/22/2026, is not for resale, is licensed for one-time use only, and may only be used in accordance with the AIA Contract Documents® Terms of Service. To report copyright violations, e-mail docinfo@aiacontracts.com.
User Notes: (67fd6eb75218b82068b6b9e4)

Retainage shall be determined as follows: Pursuant to N.J.S.A. 18A:18A-40.3, the Owner will withhold two percent (2%) of the amount due on each partial payment when the outstanding balance of the Contract exceeds Five Hundred Thousand Dollars ($500,000.00). The Owner will withhold five percent (5%) of the amount due on each partial payment when the outstanding balance of the Contract is Five Hundred Thousand Dollars ($500,000.00) or less. Retainage shall be withheld until the Owner approves the Architect's determination that the work has been satisfactorily completed and no unsettled claims exist. The final acceptance shall not be binding or conclusive upon the Owner should it subsequently discover that the contractor has supplied inferior material or workmanship or has departed from the terms of his contract. Should such a condition appear the Owner shall have the right, notwithstanding final acceptance and payment, to cause the work to be properly done in accordance with the drawings and specifications at the cost and expense of the contractor.

§ 5.1.7.1.1 The following items are not subject to retainage: **NOT APPLICABLE**
(Insert any items not subject to the withholding of retainage, such as general conditions, insurance, etc.)

Not Applicable

§ 5.1.7.2 Reduction or limitation of retainage, if any, shall be as follows:
(If the retainage established in Section 5.1.7.1 is to be modified prior to Substantial Completion of the entire Work, including modifications for Substantial Completion of portions of the Work as provided in Section 3.3.2, insert provisions for such modifications.)

Not Applicable

§ 5.1.7.3 Except as set forth in this Section 5.1.7.3, upon Substantial Completion of the Work, the Contractor may submit an Application for Payment that includes the retainage withheld from prior Applications for Payment pursuant to this Section 5.1.7. The Application for Payment submitted at Substantial Completion shall not include retainage as follows:
(Insert any other conditions for release of retainage upon Substantial Completion.)

Not Applicable

§ 5.1.8 If final completion of the Work is materially delayed through no fault of the Contractor, the Owner shall pay the Contractor any additional amounts in accordance with Article 9 of AIA Document A201–2017.

§ 5.1.9 Except with the Owner's prior approval, the Contractor shall not make advance payments to suppliers for materials or equipment which have not been delivered and stored at the site.

§ 5.2 Final Payment
§ 5.2.1 Final payment, constituting the entire unpaid balance of the Contract Sum, shall be made by the Owner to the Contractor when

- **.1** the Contractor has fully performed the Contract except for the Contractor's responsibility to correct Work as provided in Article 12 of AIA Document A201–2017, and to satisfy other requirements, if any, which extend beyond final payment; and
- **.2** a final Certificate for Payment has been issued by the Architect.

§ 5.2.2 The Owner's final payment to the Contractor shall be made no later than 30 days after the issuance of the Architect's final Certificate for Payment, or as follows:

Not Applicable

§ 5.3 Interest
Payments due and unpaid under the Contract shall bear interest from the date payment is due at the rate stated below, or in the absence thereof, at the legal rate prevailing from time to time at the place where the Project is located.
(Insert rate of interest agreed upon, if any.)

0 % Zero Percent

AIA Document A101 – 2017. Copyright © 1915, 1918, 1925, 1937, 1951, 1958, 1961, 1963, 1967, 1974, 1977, 1987, 1991, 1997, 2007 and 2017. All rights reserved. "The American Institute of Architects," "American Institute of Architects," "AIA," the AIA Logo, and "AIA Contract Documents" are trademarks of The American Institute of Architects. This draft was produced at 16:23:27 EDT on 04/14/2025 under Subscription No.20240074275 which expires on 01/22/2026, is not for resale, is licensed for one-time use only, and may only be used in accordance with the AIA Contract Documents® Terms of Service. To report copyright violations, e-mail docinfo@aiacontracts.com.
User Notes: (67fd6eb75218b82068b6b9e4)

ARTICLE 6 DISPUTE RESOLUTION

§ 6.1 Initial Decision Maker

The Architect will serve as the Initial Decision Maker pursuant to Article 15 of AIA Document A201–2017, unless the parties appoint below another individual, not a party to this Agreement, to serve as the Initial Decision Maker.
(If the parties mutually agree, insert the name, address and other contact information of the Initial Decision Maker, if other than the Architect.)

§ 6.2 Binding Dispute Resolution

For any Claim subject to, but not resolved by, mediation pursuant to Article 15 of AIA Document A201–2017, the method of binding dispute resolution shall be as follows:
(Check the appropriate box.)

[ ] Arbitration pursuant to Section 15.4 of AIA Document A201–2017

[X] Litigation in Superior Court of New Jersey in Camden County

[ ] Other *(Specify)*

If the Owner and Contractor do not select a method of binding dispute resolution, or do not subsequently agree in writing to a binding dispute resolution method other than litigation, Claims will be resolved by litigation in a court of competent jurisdiction.

ARTICLE 7 TERMINATION OR SUSPENSION

§ 7.1 The Contract may be terminated by the Owner or the Contractor as provided in Article 14 of AIA Document A201–2017.

§ 7.2 The Work may be suspended by the Owner as provided in Article 14 of AIA Document A201–2017.

ARTICLE 8 MISCELLANEOUS PROVISIONS

§ 8.1 Where reference is made in this Agreement to a provision of AIA Document A201–2017 or another Contract Document, the reference refers to that provision as amended or supplemented by other provisions of the Contract Documents.

§ 8.2 The Owner's representative:
(Name, address, email address, and other information)

LAN Associates Engineering, Planning, Architecture, Surveying, Inc.
Mr. Jeff Potter, AIA, LEED AP
1018 Laurel Oak Road, Suite 11
Voorhees, New Jersey 08043
E: jeff.potter@lanassociates.com
C: 609-680-0592

§ 8.3 The Contractor's representative:
(Name, address, email address, and other information)

TBD

§ 8.4 Neither the Owner's nor the Contractor's representative shall be changed without ten days' prior notice to the other party.

§ 8.5 Insurance and Bonds

§ 8.5.1 The Owner and the Contractor shall purchase and maintain insurance as set forth in AIA Document A101™–2017, Standard Form of Agreement Between Owner and Contractor where the basis of payment is a Stipulated Sum, Exhibit A, Insurance and Bonds, and elsewhere in the Contract Documents.

AIA Document A101 – 2017. Copyright © 1915, 1918, 1925, 1937, 1951, 1958, 1961, 1963, 1967, 1974, 1977, 1987, 1991, 1997, 2007 and 2017. All rights reserved. "The American Institute of Architects," "American Institute of Architects," "AIA," the AIA Logo, and "AIA Contract Documents" are trademarks of The American Institute of Architects. This draft was produced at 16:23:27 EDT on 04/14/2025 under Subscription No.20240074275 which expires on 01/22/2026, is not for resale, is licensed for one-time use only, and may only be used in accordance with the AIA Contract Documents® Terms of Service. To report copyright violations, e-mail docinfo@aiacontracts.com.
User Notes: (67fd6eb75218b82068b6b9e4)

§ 8.5.2 The Contractor shall provide bonds as set forth in AIA Document A101™–2017 Exhibit A, and elsewhere in the Contract Documents.

§ 8.6 Notice in electronic format, pursuant to Article 1 of AIA Document A201–2017, may be given in accordance with AIA Document E203™–2013, Building Information Modeling and Digital Data Exhibit, if completed, or as otherwise set forth below: **NOT APPLICABLE**
(If other than in accordance with a building information modeling exhibit, insert requirements for delivering notice in electronic format such as name, title, and email address of the recipient and whether and how the system will be required to generate a read receipt for the transmission.)

§ 8.7 Other provisions:

1. Payments due and unpaid under the Contract shall in no instance bear interest, except as required by law pursuant to section 5.1.3.4 of this Agreement.
2. The contractor shall ensure that the Project Site is maintained in a clean and safe condition at all times. If the contractor fails to keep the Project Site in a clean and safe condition, said failure shall result in the following:
a. All claims resulting from the Contractor's failure shall be the Contractor's sole responsibility;
b. Said failure shall constitute an act of default and a substantial breach of the Contract giving the Owner remedies under the Contract Documents; and
c. The Owner shall have the right to withhold any payments until the Contractor cures its failure.
Failure to cure shall authorize the Owner to withhold any Certifications for Payment until such time as the Contractor has rectified same. Further, if the Contractor fails to clean up as provided in the Contract Documents, the Owner may do so and the cost thereof shall be charged to the Contractor.
3. The within contract shall be governed by and interpreted pursuant to the laws of the State of New Jersey.
4. The Contractor shall comply with the anti-discrimination provisions of N.J.S.A. 10:2-1, et seq., the New Jersey Law Against Discrimination, N.J.S.A. 10:5-1, et seq., and all provisions regarding equal employment opportunity, N.J.S.A. 10:5-31, et seq., N.J.A.C. 17:27-1.1, and N.J.A.C. 6A:7-1.8. The Owner and the Contractor guaranty to afford equal opportunity in the performance of this Contract in accordance with an affirmative action program approved by the State Treasurer and shall provide the documents required for this Project.
5. To perform the services provided for herein, the Contractor and its prime subcontractors shall be prequalified/classified by the New Jersey Department of Treasury, Division of Property, Management and Construction. The failure to possess or obtain such classifications shall result in the immediate termination of this Agreement.
6. The Contractor represents that, to the best of its knowledge, information and belief, none of its employees in engaged in conduct that constitutes a conflict of interest under, or a violation of, the School Ethics Act, N.J.S.A. 18A:12-21, et seq., and N.J.A.C. 6A:28-1.1, et seq.
7. The Contractor shall provide written notice to its subcontractors and suppliers of the responsibility to submit proof of business registration in the State of New Jersey to the Contractor. The requirement of proof of business registration extends down through all levels (tiers) of the Project.
8. Before final payment on the contract is made by Owner, the Contractor shall submit an accurate list and the proof of business registration in the State of New Jersey of each subcontractor or supplier used in the fulfillment of the contract, or shall attest that no subcontractors were used.
9. For the term of the Agreement, the Contractor, any subcontractor and each of their affiliates, so designated pursuant to N.J.S.A. 52:32-44(g)(3), shall collect and remit to the New Jersey Director of the Division of Taxation in the Department of Treasury, the use tax due pursuant to the Sales and Use Tax Act, N.J.S.A. 52:32B-1, et seq., on all of their sales of tangible personal property delivered into the State of New Jersey, regardless of whether the tangible personal property is intended for a contract with a contracting agency. For purposes herein, "affiliate" shall mean any entity that: (a) directly, indirectly or constructively controls another entity; (b) is directly, indirectly or constructively controlled by another entity; or, (c) is subject to the control of a common entity. For purposes of the immediately preceding sentence, an entity controls another entity if it owns, directly or indirectly, more than fifty percent (50%) of the ownership interest of that entity.
10. It is the obligation of the Contractor to provide a full and complete copy of all insurance policies held by it at the Contractor's sole expense, upon reasonable request by the Owner, in the amounts specified in the Bid Documents (see Article 11 of modified AIA Document A201-2017 General Conditions of the Contract for Construction). The Contractor's failure to obtain or maintain adequate insurance coverage shall result in the immediate termination of this Agreement. The Owner will have the right to request copies of the Contractor's insurance policies or any part thereof

AIA Document A101 – 2017. Copyright © 1915, 1918, 1925, 1937, 1951, 1958, 1961, 1963, 1967, 1974, 1977, 1987, 1991, 1997, 2007 and 2017. All rights reserved. "The American Institute of Architects," "American Institute of Architects," "AIA," the AIA Logo, and "AIA Contract Documents" are trademarks of The American Institute of Architects. This draft was produced at 16:23:27 EDT on 04/14/2025 under Subscription No.20240074275 which expires on 01/22/2026, is not for resale, is licensed for one-time use only, and may only be used in accordance with the AIA Contract Documents® Terms of Service. To report copyright violations, e-mail docinfo@aiacontracts.com.
User Notes: (67fd6eb75218b82068b6b9e4)

for the duration of the contract period.
11. This Agreement and the General Conditions of the Contract as modified or supplemented in writing, shall control in the case of conflict between these documents and the Project Specifications, the Project Manual and any other exhibits incorporated by reference into this Agreement in Article 9 herein.
12. See Attachment #1 of the Contract Specifications, titled Supplemental Contract Terms for Contracts Supported by Federal Funds.

ARTICLE 9 ENUMERATION OF CONTRACT DOCUMENTS

§ 9.1 This Agreement is comprised of the following documents:

.1 AIA Document A101™–2017, Standard Form of Agreement Between Owner and Contractor

.2 AIA Document A101™–2017, Exhibit A, Insurance and Bonds – **NOT APPLICABLE – SEE THE A201-2017**

.3 AIA Document A201™–2017, General Conditions of the Contract for Construction

.4 AIA Document E203™–2013, Building Information Modeling and Digital Data Exhibit, dated as indicated below: **NOT APPLICABLE**

(Insert the date of the building information modeling exhibit incorporated into this Agreement.)

.5 Drawings *(by LAN Associates)* **SEE DRAWING INDEX**

Number	Title	Date

.6 Specifications **SEE TABLE OF CONTENTS**

Section	Title	Date	Pages

.7 Addenda, if any:

Number	Date	Pages

Portions of Addenda relating to bidding or proposal requirements are not part of the Contract Documents unless the bidding or proposal requirements are also enumerated in this Article 9.

.8 Other Exhibits:
(Check all boxes that apply and include appropriate information identifying the exhibit where required.)

[ ] AIA Document E204™–2017, Sustainable Projects Exhibit, dated as indicated below:
(Insert the date of the E204-2017 incorporated into this Agreement.)

[ ] The Sustainability Plan:

Title	Date	Pages

[X] Supplementary and other Conditions of the Contract: **THESE ARE INCORPORATED DIRECTLY INTO THE AIA A201.**

Document	Title	Date	Pages

AIA Document A101 – 2017. Copyright © 1915, 1918, 1925, 1937, 1951, 1958, 1961, 1963, 1967, 1974, 1977, 1987, 1991, 1997, 2007 and 2017. All rights reserved. "The American Institute of Architects," "American Institute of Architects," "AIA," the AIA Logo, and "AIA Contract Documents" are trademarks of The American Institute of Architects. This draft was produced at 16:23:27 EDT on 04/14/2025 under Subscription No.20240074275 which expires on 01/22/2026, is not for resale, is licensed for one-time use only, and may only be used in accordance with the AIA Contract Documents® Terms of Service. To report copyright violations, e-mail docinfo@aiacontracts.com.
User Notes: (67fd6eb75218b82068b6b9e4)

.9 Other documents, if any, listed below:
(List here any additional documents that are intended to form part of the Contract Documents. AIA Document A201™–2017 provides that the advertisement or invitation to bid, Instructions to Bidders, sample forms, the Contractor's bid or proposal, portions of Addenda relating to bidding or proposal requirements, and other information furnished by the Owner in anticipation of receiving bids or proposals, are not part of the Contract Documents unless enumerated in this Agreement. Any such documents should be listed here only if intended to be part of the Contract Documents.)

Mandatory Equal Employment Opportunity Language, annexed hereto and made a part hereof

Bidder's Bid Submission

Board Resolution for Award of Contract

This Agreement entered into as of the day and year first written above.

OWNER *(Signature)*	**CONTRACTOR** *(Signature)*
(Printed name and title)	*(Printed name and title)*

AIA Document A101 – 2017. Copyright © 1915, 1918, 1925, 1937, 1951, 1958, 1961, 1963, 1967, 1974, 1977, 1987, 1991, 1997, 2007 and 2017. All rights reserved. "The American Institute of Architects," "American Institute of Architects," "AIA," the AIA Logo, and "AIA Contract Documents" are trademarks of The American Institute of Architects. This draft was produced at 16:23:27 EDT on 04/14/2025 under Subscription No.20240074275 which expires on 01/22/2026, is not for resale, is licensed for one-time use only, and may only be used in accordance with the AIA Contract Documents® Terms of Service. To report copyright violations, e-mail docinfo@aiacontracts.com.
User Notes: (67fd6eb75218b82068b6b9e4)

DRAFT

AIA® Document A201™ – 2017

General Conditions of the Contract for Construction

TABLE OF ARTICLES

1 GENERAL PROVISIONS

2 OWNER

3 CONTRACTOR

4 ARCHITECT

5 SUBCONTRACTORS

6 CONSTRUCTION BY OWNER OR BY SEPARATE CONTRACTORS

7 CHANGES IN THE WORK

8 TIME

9 PAYMENTS AND COMPLETION

10 PROTECTION OF PERSONS AND PROPERTY

11 INSURANCE AND BONDS

12 UNCOVERING AND CORRECTION OF WORK

13 MISCELLANEOUS PROVISIONS

14 TERMINATION OR SUSPENSION OF THE CONTRACT

15 CLAIMS AND DISPUTES

ADDITIONS AND DELETIONS: The author of this document has added information needed for its completion. The author may also have revised the text of the original AIA standard form. An *Additions and Deletions Report* that notes added information as well as revisions to the standard form text is available from the author and should be reviewed.

This document has important legal consequences. Consultation with an attorney is encouraged with respect to its completion or modification.

For guidance in modifying this document to include supplementary conditions, see AIA Document A503™, Guide for Supplementary Conditions.

ELECTRONIC COPYING of any portion of this AIA® Document to another electronic file is prohibited and constitutes a violation of copyright laws as set forth in the footer of this document.

AIA Document A201™ – 2017. Copyright © 1911, 1915, 1918, 1925, 1937, 1951, 1958, 1961, 1963, 1966, 1970, 1976, 1987, 1997, 2007 and 2017 by The American Institute of Architects. **All rights reserved. WARNING: This AIA® Document is protected by U.S. Copyright Law and International Treaties. Unauthorized reproduction or distribution of this AIA® Document, or any portion of it, may result in severe civil and criminal penalties, and will be prosecuted to the maximum extent possible under the law.** This draft was produced by AIA software at 09:54:27 on 07/24/2018 under Order No.9799823797 which expires on 01/19/2019, and is not for resale.
User Notes: (913728330)

INDEX

(Topics and numbers in bold are Section headings.)

Acceptance of Nonconforming Work
9.6.6, 9.9.3, **12.3**
Acceptance of Work
9.6.6, 9.8.2, 9.9.3, 9.10.1, 9.10.3, 12.3
Access to Work
3.16, 6.2.1, 12.1
Accident Prevention
10
Acts and Omissions
3.2, 3.3.2, 3.12.8, 3.18, 4.2.3, 8.3.1, 9.5.1, 10.2.5, 10.2.8, 13.3.2, 14.1, 15.1.2, 15.2
Addenda
1.1.1
Additional Costs, Claims for
3.7.4, 3.7.5, 10.3.2, 15.1.5
Additional Inspections and Testing
9.4.2, 9.8.3, 12.2.1, **13.4**
Additional Time, Claims for
3.2.4, 3.7.4, 3.7.5, 3.10.2, 8.3.2, **15.1.6**
Administration of the Contract
3.1.3, **4.2**, 9.4, 9.5
Advertisement or Invitation to Bid
1.1.1
Aesthetic Effect
4.2.13
Allowances
3.8
Applications for Payment
4.2.5, 7.3.9, 9.2, **9.3**, 9.4, 9.5.1, 9.5.4, 9.6.3, 9.7, 9.10
Approvals
2.1.1, 2.3.1, 2.5, 3.1.3, 3.10.2, 3.12.8, 3.12.9, 3.12.10.1, 4.2.7, 9.3.2, 13.4.1
Arbitration
8.3.1, 15.3.2, **15.4**
ARCHITECT
4
Architect, Definition of
4.1.1
Architect, Extent of Authority
2.5, 3.12.7, 4.1.2, 4.2, 5.2, 6.3, 7.1.2, 7.3.4, 7.4, 9.2, 9.3.1, 9.4, 9.5, 9.6.3, 9.8, 9.10.1, 9.10.3, 12.1, 12.2.1, 13.4.1, 13.4.2, 14.2.2, 14.2.4, 15.1.4, 15.2.1
Architect, Limitations of Authority and Responsibility
2.1.1, 3.12.4, 3.12.8, 3.12.10, 4.1.2, 4.2.1, 4.2.2, 4.2.3, 4.2.6, 4.2.7, 4.2.10, 4.2.12, 4.2.13, 5.2.1, 7.4, 9.4.2, 9.5.4, 9.6.4, 15.1.4, 15.2
Architect's Additional Services and Expenses
2.5, 12.2.1, 13.4.2, 13.4.3, 14.2.4
Architect's Administration of the Contract
3.1.3, 3.7.4, 15.2, 9.4.1, 9.5
Architect's Approvals
2.5, 3.1.3, 3.5, 3.10.2, 4.2.7
Architect's Authority to Reject Work
3.5, 4.2.6, 12.1.2, 12.2.1
Architect's Copyright
1.1.7, 1.5
Architect's Decisions
3.7.4, 4.2.6, 4.2.7, 4.2.11, 4.2.12, 4.2.13, 4.2.14, 6.3, 7.3.4, 7.3.9, 8.1.3, 8.3.1, 9.2, 9.4.1, 9.5, 9.8.4, 9.9.1, 13.4.2, 15.2
Architect's Inspections
3.7.4, 4.2.2, 4.2.9, 9.4.2, 9.8.3, 9.9.2, 9.10.1, 13.4
Architect's Instructions
3.2.4, 3.3.1, 4.2.6, 4.2.7, 13.4.2
Architect's Interpretations
4.2.11, 4.2.12
Architect's Project Representative
4.2.10
Architect's Relationship with Contractor
1.1.2, 1.5, 2.3.3, 3.1.3, 3.2.2, 3.2.3, 3.2.4, 3.3.1, 3.4.2, 3.5, 3.7.4, 3.7.5, 3.9.2, 3.9.3, 3.10, 3.11, 3.12, 3.16, 3.18, 4.1.2, 4.2, 5.2, 6.2.2, 7, 8.3.1, 9.2, 9.3, 9.4, 9.5, 9.7, 9.8, 9.9, 10.2.6, 10.3, 11.3, 12, 13.3.2, 13.4, 15.2
Architect's Relationship with Subcontractors
1.1.2, 4.2.3, 4.2.4, 4.2.6, 9.6.3, 9.6.4, 11.3
Architect's Representations
9.4.2, 9.5.1, 9.10.1
Architect's Site Visits
3.7.4, 4.2.2, 4.2.9, 9.4.2, 9.5.1, 9.9.2, 9.10.1, 13.4
Asbestos
10.3.1
Attorneys' Fees
3.18.1, 9.6.8, 9.10.2, 10.3.3
Award of Separate Contracts
6.1.1, 6.1.2
Award of Subcontracts and Other Contracts for Portions of the Work
5.2
Basic Definitions
1.1
Bidding Requirements
1.1.1
Binding Dispute Resolution
8.3.1, 9.7, 11.5, 13.1, 15.1.2, 15.1.3, 15.2.1, 15.2.5, 15.2.6.1, 15.3.1, 15.3.2, 15.3.3, 15.4.1
Bonds, Lien
7.3.4.4, 9.6.8, 9.10.2, 9.10.3
Bonds, Performance, and Payment
7.3.4.4, 9.6.7, 9.10.3, **11.1.2**, 11.1.3, **11.5**
Building Information Models Use and Reliance
1.8
Building Permit
3.7.1
Capitalization
1.3
Certificate of Substantial Completion
9.8.3, 9.8.4, 9.8.5
Certificates for Payment
4.2.1, 4.2.5, 4.2.9, 9.3.3, **9.4**, 9.5, 9.6.1, 9.6.6, 9.7, 9.10.1, 9.10.3, 14.1.1.3, 14.2.4, 15.1.4

AIA Document A201™ – 2017. Copyright © 1911, 1915, 1918, 1925, 1937, 1951, 1958, 1961, 1963, 1966, 1970, 1976, 1987, 1997, 2007 and 2017 by The American Institute of Architects. **All rights reserved. WARNING: This AIA® Document is protected by U.S. Copyright Law and International Treaties. Unauthorized reproduction or distribution of this AIA® Document, or any portion of it, may result in severe civil and criminal penalties, and will be prosecuted to the maximum extent possible under the law.** This draft was produced by AIA software at 09:54:27 on 07/24/2018 under Order No.9799823797 which expires on 01/19/2019, and is not for resale.
User Notes: (913728330)

Certificates of Inspection, Testing or Approval
13.4.4
Certificates of Insurance
9.10.2
Change Orders
1.1.1, 3.4.2, 3.7.4, 3.8.2.3, 3.11, 3.12.8, 4.2.8, 5.2.3, 7.1.2, 7.1.3, **7.2**, 7.3.2, 7.3.7, 7.3.9, 7.3.10, 8.3.1, 9.3.1.1, 9.10.3, 10.3.2, 11.2, 11.5, 12.1.2
Change Orders, Definition of
7.2.1
CHANGES IN THE WORK
2.2.2, 3.11, 4.2.8, **7**, 7.2.1, 7.3.1, 7.4, 8.3.1, 9.3.1.1, 11.5
Claims, Definition of
15.1.1
Claims, Notice of
1.6.2, 15.1.3
CLAIMS AND DISPUTES
3.2.4, 6.1.1, 6.3, 7.3.9, 9.3.3, 9.10.4, 10.3.3, **15**, 15.4
Claims and Timely Assertion of Claims
15.4.1
Claims for Additional Cost
3.2.4, 3.3.1, 3.7.4, 7.3.9, 9.5.2, 10.2.5, 10.3.2, **15.1.5**
Claims for Additional Time
3.2.4, 3.3.1, 3.7.4, 6.1.1, 8.3.2, 9.5.2, 10.3.2, **15.1.6**
Concealed or Unknown Conditions, Claims for
3.7.4
Claims for Damages
3.2.4, 3.18, 8.3.3, 9.5.1, 9.6.7, 10.2.5, 10.3.3, 11.3, 11.3.2, 14.2.4, 15.1.7
Claims Subject to Arbitration
15.4.1
Cleaning Up
3.15, 6.3
Commencement of the Work, Conditions Relating to
2.2.1, 3.2.2, 3.4.1, 3.7.1, 3.10.1, 3.12.6, 5.2.1, 5.2.3, 6.2.2, 8.1.2, 8.2.2, 8.3.1, 11.1, 11.2, **15.1.5**
Commencement of the Work, Definition of
8.1.2
Communications
3.9.1, **4.2.4**
Completion, Conditions Relating to
3.4.1, 3.11, 3.15, 4.2.2, 4.2.9, 8.2, 9.4.2, 9.8, 9.9.1, 9.10, 12.2, 14.1.2, 15.1.2
COMPLETION, PAYMENTS AND
9
Completion, Substantial
3.10.1, 4.2.9, 8.1.1, 8.1.3, 8.2.3, 9.4.2, 9.8, 9.9.1, 9.10.3, 12.2, 15.1.2
Compliance with Laws
2.3.2, 3.2.3, 3.6, 3.7, 3.12.10, 3.13, 9.6.4, 10.2.2, 13.1, 13.3, 13.4.1, 13.4.2, 13.5, 14.1.1, 14.2.1.3, 15.2.8, 15.4.2, 15.4.3
Concealed or Unknown Conditions
3.7.4, 4.2.8, 8.3.1, 10.3
Conditions of the Contract
1.1.1, 6.1.1, 6.1.4
Consent, Written
3.4.2, 3.14.2, 4.1.2, 9.8.5, 9.9.1, 9.10.2, 9.10.3, 13.2, 15.4.4.2
Consolidation or Joinder
15.4.4
CONSTRUCTION BY OWNER OR BY SEPARATE CONTRACTORS
1.1.4, **6**
Construction Change Directive, Definition of
7.3.1
Construction Change Directives
1.1.1, 3.4.2, 3.11, 3.12.8, 4.2.8, 7.1.1, 7.1.2, 7.1.3, **7.3**, 9.3.1.1
Construction Schedules, Contractor's
3.10, 3.11, 3.12.1, 3.12.2, 6.1.3, 15.1.6.2
Contingent Assignment of Subcontracts
5.4, 14.2.2.2
Continuing Contract Performance
15.1.4
Contract, Definition of
1.1.2
CONTRACT, TERMINATION OR SUSPENSION OF THE
5.4.1.1, 5.4.2, 11.5, **14**
Contract Administration
3.1.3, 4, 9.4, 9.5
Contract Award and Execution, Conditions Relating to
3.7.1, 3.10, 5.2, 6.1
Contract Documents, Copies Furnished and Use of
1.5.2, 2.3.6, 5.3
Contract Documents, Definition of
1.1.1
Contract Sum
2.2.2, 2.2.4, 3.7.4, 3.7.5, 3.8, 3.10.2, 5.2.3, 7.3, 7.4, **9.1**, 9.2, 9.4.2, 9.5.1.4, 9.6.7, 9.7, 10.3.2, 11.5, 12.1.2, 12.3, 14.2.4, 14.3.2, 15.1.4.2, **15.1.5, 15.2.5**
Contract Sum, Definition of
9.1
Contract Time
1.1.4, 2.2.1, 2.2.2, 3.7.4, 3.7.5, 3.10.2, 5.2.3, 6.1.5, 7.2.1.3, 7.3.1, 7.3.5, 7.3.6, 7, 7, 7.3.10, 7.4, 8.1.1, 8.2.1, 8.2.3, 8.3.1, 9.5.1, 9.7, 10.3.2, 12.1.1, 12.1.2, 14.3.2, 15.1.4.2, 15.1.6.1, 15.2.5
Contract Time, Definition of
8.1.1
CONTRACTOR
3
Contractor, Definition of
3.1, 6.1.2
Contractor's Construction and Submittal Schedules
3.10, 3.12.1, 3.12.2, 4.2.3, 6.1.3, 15.1.6.2
Contractor's Employees
2.2.4, 3.3.2, 3.4.3, 3.8.1, 3.9, 3.18.2, 4.2.3, 4.2.6, 10.2, 10.3, 11.3, 14.1, 14.2.1.1
Contractor's Liability Insurance
11.1

AIA Document A201™ – 2017. Copyright © 1911, 1915, 1918, 1925, 1937, 1951, 1958, 1961, 1963, 1966, 1970, 1976, 1987, 1997, 2007 and 2017 by The American Institute of Architects. **All rights reserved. WARNING: This AIA® Document is protected by U.S. Copyright Law and International Treaties. Unauthorized reproduction or distribution of this AIA® Document, or any portion of it, may result in severe civil and criminal penalties, and will be prosecuted to the maximum extent possible under the law.** This draft was produced by AIA software at 09:54:27 on 07/24/2018 under Order No.9799823797 which expires on 01/19/2019, and is not for resale.
User Notes: (913728330)

Contractor's Relationship with Separate Contractors and Owner's Forces
3.12.5, 3.14.2, 4.2.4, 6, 11.3, 12.2.4
Contractor's Relationship with Subcontractors
1.2.2, 2.2.4, 3.3.2, 3.18.1, 3.18.2, 4.2.4, 5, 9.6.2, 9.6.7, 9.10.2, 11.2, 11.3, 11.4
Contractor's Relationship with the Architect
1.1.2, 1.5, 2.3.3, 3.1.3, 3.2.2, 3.2.3, 3.2.4, 3.3.1, 3.4.2, 3.5.1, 3.7.4, 3.10, 3.11, 3.12, 3.16, 3.18, 4.2, 5.2, 6.2.2, 7, 8.3.1, 9.2, 9.3, 9.4, 9.5, 9.7, 9.8, 9.9, 10.2.6, 10.3, 11.3, 12, 13.4, 15.1.3, 15.2.1
Contractor's Representations
3.2.1, 3.2.2, 3.5, 3.12.6, 6.2.2, 8.2.1, 9.3.3, 9.8.2
Contractor's Responsibility for Those Performing the Work
3.3.2, 3.18, 5.3, 6.1.3, 6.2, 9.5.1, 10.2.8
Contractor's Review of Contract Documents
3.2
Contractor's Right to Stop the Work
2.2.2, 9.7
Contractor's Right to Terminate the Contract
14.1
Contractor's Submittals
3.10, 3.11, 3.12, 4.2.7, 5.2.1, 5.2.3, 9.2, 9.3, 9.8.2, 9.8.3, 9.9.1, 9.10.2, 9.10.3
Contractor's Superintendent
3.9, 10.2.6
Contractor's Supervision and Construction Procedures
1.2.2, 3.3, 3.4, 3.12.10, 4.2.2, 4.2.7, 6.1.3, 6.2.4, 7.1.3, 7.3.4, 7.3.6, 8.2, 10, 12, 14, 15.1.4
Coordination and Correlation
1.2, 3.2.1, 3.3.1, 3.10, 3.12.6, 6.1.3, 6.2.1
Copies Furnished of Drawings and Specifications
1.5, 2.3.6, 3.11
Copyrights
1.5, **3.17**
Correction of Work
2.5, 3.7.3, 9.4.2, 9.8.2, 9.8.3, 9.9.1, 12.1.2, **12.2**, 12.3, 15.1.3.1, 15.1.3.2, 15.2.1
Correlation and Intent of the Contract Documents
1.2
Cost, Definition of
7.3.4
Costs
2.5, 3.2.4, 3.7.3, 3.8.2, 3.15.2, 5.4.2, 6.1.1, 6.2.3, 7.3.3.3, 7.3.4, 7.3.8, 7.3.9, 9.10.2, 10.3.2, 10.3.6, 11.2, 12.1.2, 12.2.1, 12.2.4, 13.4, 14
Cutting and Patching
3.14, 6.2.5
Damage to Construction of Owner or Separate Contractors
3.14.2, 6.2.4, 10.2.1.2, 10.2.5, 10.4, 12.2.4
Damage to the Work
3.14.2, 9.9.1, 10.2.1.2, 10.2.5, 10.4, 12.2.4
Damages, Claims for
3.2.4, 3.18, 6.1.1, 8.3.3, 9.5.1, 9.6.7, 10.3.3, 11.3.2, 11.3, 14.2.4, 15.1.7
Damages for Delay
6.2.3, 8.3.3, 9.5.1.6, 9.7, 10.3.2, 14.3.2
Date of Commencement of the Work, Definition of
8.1.2
Date of Substantial Completion, Definition of
8.1.3
Day, Definition of
8.1.4
Decisions of the Architect
3.7.4, 4.2.6, 4.2.7, 4.2.11, 4.2.12, 4.2.13, 6.3, 7.3.4, 7.3.9, 8.1.3, 8.3.1, 9.2, 9.4, 9.5.1, 9.8.4, 9.9.1, 13.4.2, 14.2.2, 14.2.4, 15.1, 15.2
Decisions to Withhold Certification
9.4.1, **9.5**, 9.7, 14.1.1.3
Defective or Nonconforming Work, Acceptance, Rejection and Correction of
2.5, 3.5, 4.2.6, 6.2.3, 9.5.1, 9.5.3, 9.6.6, 9.8.2, 9.9.3, 9.10.4, 12.2.1
Definitions
1.1, 2.1.1, 3.1.1, 3.5, 3.12.1, 3.12.2, 3.12.3, 4.1.1, 5.1, 6.1.2, 7.2.1, 7.3.1, 8.1, 9.1, 9.8.1, 15.1.1
Delays and Extensions of Time
3.2, **3.7.4**, 5.2.3, 7.2.1, 7.3.1, **7.4**, **8.3**, 9.5.1, **9.7**, 10.3.2, **10.4**, 14.3.2, **15.1.6**, 15.2.5
Digital Data Use and Transmission
1.7
Disputes
6.3, 7.3.9, 15.1, 15.2
Documents and Samples at the Site
3.11
Drawings, Definition of
1.1.5
Drawings and Specifications, Use and Ownership of
3.11
Effective Date of Insurance
8.2.2
Emergencies
10.4, 14.1.1.2, **15.1.5**
Employees, Contractor's
3.3.2, 3.4.3, 3.8.1, 3.9, 3.18.2, 4.2.3, 4.2.6, 10.2, 10.3.3, 11.3, 14.1, 14.2.1.1
Equipment, Labor, or Materials
1.1.3, 1.1.6, 3.4, 3.5, 3.8.2, 3.8.3, 3.12, 3.13, 3.15.1, 4.2.6, 4.2.7, 5.2.1, 6.2.1, 7.3.4, 9.3.2, 9.3.3, 9.5.1.3, 9.10.2, 10.2.1, 10.2.4, 14.2.1.1, 14.2.1.2
Execution and Progress of the Work
1.1.3, 1.2.1, 1.2.2, 2.3.4, 2.3.6, 3.1, 3.3.1, 3.4.1, 3.7.1, 3.10.1, 3.12, 3.14, 4.2, 6.2.2, 7.1.3, 7.3.6, 8.2, 9.5.1, 9.9.1, 10.2, 10.3, 12.1, 12.2, 14.2, 14.3.1, 15.1.4
Extensions of Time
3.2.4, 3.7.4, 5.2.3, 7.2.1, 7.3, 7.4, 9.5.1, 9.7, 10.3.2, 10.4, 14.3, 15.1.6, **15.2.5**
Failure of Payment
9.5.1.3, **9.7**, 9.10.2, 13.5, 14.1.1.3, 14.2.1.2
Faulty Work
(See Defective or Nonconforming Work)
Final Completion and Final Payment
4.2.1, 4.2.9, 9.8.2, **9.10**, 12.3, 14.2.4, 14.4.3

AIA Document A201™ – 2017. Copyright © 1911, 1915, 1918, 1925, 1937, 1951, 1958, 1961, 1963, 1966, 1970, 1976, 1987, 1997, 2007 and 2017 by The American Institute of Architects. **All rights reserved. WARNING: This AIA® Document is protected by U.S. Copyright Law and International Treaties. Unauthorized reproduction or distribution of this AIA® Document, or any portion of it, may result in severe civil and criminal penalties, and will be prosecuted to the maximum extent possible under the law.** This draft was produced by AIA software at 09:54:27 on 07/24/2018 under Order No.9799823797 which expires on 01/19/2019, and is not for resale.
User Notes: (913728330)

Financial Arrangements, Owner's
2.2.1, 13.2.2, 14.1.1.4
GENERAL PROVISIONS
1
Governing Law
13.1
Guarantees (See Warranty)
Hazardous Materials and Substances
10.2.4, **10.3**
Identification of Subcontractors and Suppliers
5.2.1
Indemnification
3.17, **3.18**, 9.6.8, 9.10.2, 10.3.3, 11.3
Information and Services Required of the Owner
2.1.2, **2.2**, 2.3, 3.2.2, 3.12.10.1, 6.1.3, 6.1.4, 6.2.5, 9.6.1, 9.9.2, 9.10.3, 10.3.3, 11.2, 13.4.1, 13.4.2, 14.1.1.4, 14.1.4, 15.1.4
Initial Decision
15.2
Initial Decision Maker, Definition of
1.1.8
Initial Decision Maker, Decisions
14.2.4, 15.1.4.2, 15.2.1, 15.2.2, 15.2.3, 15.2.4, 15.2.5
Initial Decision Maker, Extent of Authority
14.2.4, 15.1.4.2, 15.2.1, 15.2.2, 15.2.3, 15.2.4, 15.2.5
Injury or Damage to Person or Property
10.2.8, 10.4
Inspections
3.1.3, 3.3.3, 3.7.1, 4.2.2, 4.2.6, 4.2.9, 9.4.2, 9.8.3, 9.9.2, 9.10.1, 12.2.1, 13.4
Instructions to Bidders
1.1.1
Instructions to the Contractor
3.2.4, 3.3.1, 3.8.1, 5.2.1, 7, 8.2.2, 12, 13.4.2
Instruments of Service, Definition of
1.1.7
Insurance
6.1.1, 7.3.4, 8.2.2, 9.3.2, 9.8.4, 9.9.1, 9.10.2, 10.2.5, **11**
Insurance, Notice of Cancellation or Expiration
11.1.4, 11.2.3
Insurance, Contractor's Liability
11.1
Insurance, Effective Date of
8.2.2, 14.4.2
Insurance, Owner's Liability
11.2
Insurance, Property
10.2.5, 11.2, 11.4, 11.5
Insurance, Stored Materials
9.3.2
INSURANCE AND BONDS
11
Insurance Companies, Consent to Partial Occupancy
9.9.1
Insured loss, Adjustment and Settlement of
11.5
Intent of the Contract Documents
1.2.1, 4.2.7, 4.2.12, 4.2.13
Interest
13.5
Interpretation
1.1.8, 1.2.3, **1.4**, 4.1.1, 5.1, 6.1.2, 15.1.1
Interpretations, Written
4.2.11, 4.2.12
Judgment on Final Award
15.4.2
Labor and Materials, Equipment
1.1.3, 1.1.6, **3.4**, 3.5, 3.8.2, 3.8.3, 3.12, 3.13, 3.15.1, 5.2.1, 6.2.1, 7.3.4, 9.3.2, 9.3.3, 9.5.1.3, 9.10.2, 10.2.1, 10.2.4, 14.2.1.1, 14.2.1.2
Labor Disputes
8.3.1
Laws and Regulations
1.5, 2.3.2, 3.2.3, 3.2.4, 3.6, 3.7, 3.12.10, 3.13, 9.6.4, 9.9.1, 10.2.2, 13.1, 13.3.1, 13.4.2, 13.5, 14, 15.2.8, 15.4
Liens
2.1.2, 9.3.1, 9.3.3, 9.6.8, 9.10.2, 9.10.4, 15.2.8
Limitations, Statutes of
12.2.5, 15.1.2, 15.4.1.1
Limitations of Liability
3.2.2, 3.5, 3.12.10, 3.12.10.1, 3.17, 3.18.1, 4.2.6, 4.2.7, 6.2.2, 9.4.2, 9.6.4, 9.6.7, 9.6.8, 10.2.5, 10.3.3, 11.3, 12.2.5, 13.3.1
Limitations of Time
2.1.2, 2.2, 2.5, 3.2.2, 3.10, 3.11, 3.12.5, 3.15.1, 4.2.7, 5.2, 5.3, 5.4.1, 6.2.4, 7.3, 7.4, 8.2, 9.2, 9.3.1, 9.3.3, 9.4.1, 9.5, 9.6, 9.7, 9.8, 9.9, 9.10, 12.2, 13.4, 14, 15, 15.1.2, 15.1.3, 15.1.5
Materials, Hazardous
10.2.4, **10.3**
Materials, Labor, Equipment and
1.1.3, 1.1.6, 3.4.1, 3.5, 3.8.2, 3.8.3, 3.12, 3.13, 3.15.1, 5.2.1, 6.2.1, 7.3.4, 9.3.2, 9.3.3, 9.5.1.3, 9.10.2, 10.2.1.2, 10.2.4, 14.2.1.1, 14.2.1.2
Means, Methods, Techniques, Sequences and Procedures of Construction
3.3.1, 3.12.10, 4.2.2, 4.2.7, 9.4.2
Mechanic's Lien
2.1.2, 9.3.1, 9.3.3, 9.6.8, 9.10.2, 9.10.4, 15.2.8
Mediation
8.3.1, 15.1.3.2, 15.2.1, 15.2.5, 15.2.6, **15.3**, 15.4.1, 15.4.1.1
Minor Changes in the Work
1.1.1, 3.4.2, 3.12.8, 4.2.8, 7.1, **7.4**
MISCELLANEOUS PROVISIONS
13
Modifications, Definition of
1.1.1
Modifications to the Contract
1.1.1, 1.1.2, 2.5, 3.11, 4.1.2, 4.2.1, 5.2.3, 7, 8.3.1, 9.7, 10.3.2
Mutual Responsibility
6.2

AIA Document A201™ – 2017. Copyright © 1911, 1915, 1918, 1925, 1937, 1951, 1958, 1961, 1963, 1966, 1970, 1976, 1987, 1997, 2007 and 2017 by The American Institute of Architects. **All rights reserved. WARNING: This AIA® Document is protected by U.S. Copyright Law and International Treaties. Unauthorized reproduction or distribution of this AIA® Document, or any portion of it, may result in severe civil and criminal penalties, and will be prosecuted to the maximum extent possible under the law.** This draft was produced by AIA software at 09:54:27 on 07/24/2018 under Order No.9799823797 which expires on 01/19/2019, and is not for resale.
User Notes: (913728330)

Nonconforming Work, Acceptance of
9.6.6, 9.9.3, **12.3**
Nonconforming Work, Rejection and Correction of
2.4, 2.5, 3.5, 4.2.6, 6.2.4, 9.5.1, 9.8.2, 9.9.3, 9.10.4, 12.2
Notice
1.6, 1.6.1, 1.6.2, 2.1.2, 2.2.2., 2.2.3, 2.2.4, 2.5, 3.2.4, 3.3.1, 3.7.4, 3.7.5, 3.9.2, 3.12.9, 3.12.10, 5.2.1, 7.4, 8.2.2 9.6.8, 9.7, 9.10.1, 10.2.8, 10.3.2, 11.5, 12.2.2.1, 13.4.1, 13.4.2, 14.1, 14.2.2, 14.4.2, 15.1.3, 15.1.5, 15.1.6, 15.4.1
Notice of Cancellation or Expiration of Insurance
11.1.4, 11.2.3
Notice of Claims
1.6.2, 2.1.2, 3.7.4, 9.6.8, 10.2.8, **15.1.3**, 15.1.5, 15.1.6, 15.2.8, 15.3.2, 15.4.1
Notice of Testing and Inspections
13.4.1, 13.4.2
Observations, Contractor's
3.2, 3.7.4
Occupancy
2.3.1, 9.6.6, 9.8
Orders, Written
1.1.1, 2.4, 3.9.2, 7, 8.2.2, 11.5, 12.1, 12.2.2.1, 13.4.2, 14.3.1
OWNER
2
Owner, Definition of
2.1.1
Owner, Evidence of Financial Arrangements
2.2, 13.2.2, 14.1.1.4
Owner, Information and Services Required of the
2.1.2, **2.2**, 2.3, 3.2.2, 3.12.10, 6.1.3, 6.1.4, 6.2.5, 9.3.2, 9.6.1, 9.6.4, 9.9.2, 9.10.3, 10.3.3, 11.2, 13.4.1, 13.4.2, 14.1.1.4, 14.1.4, 15.1.4
Owner's Authority
1.5, 2.1.1, 2.3.32.4, 2.5, 3.4.2, 3.8.1, 3.12.10, 3.14.2, 4.1.2, 4.2.4, 4.2.9, 5.2.1, 5.2.4, 5.4.1, 6.1, 6.3, 7.2.1, 7.3.1, 8.2.2, 8.3.1, 9.3.2, 9.5.1, 9.6.4, 9.9.1, 9.10.2, 10.3.2, 11.4, 11.5, 12.2.2, 12.3, 13.2.2, 14.3, 14.4, 15.2.7
Owner's Insurance
11.2
Owner's Relationship with Subcontractors
1.1.2, 5.2, 5.3, 5.4, 9.6.4, 9.10.2, 14.2.2
Owner's Right to Carry Out the Work
2.5, 14.2.2
Owner's Right to Clean Up
6.3
Owner's Right to Perform Construction and to Award Separate Contracts
6.1
Owner's Right to Stop the Work
2.4
Owner's Right to Suspend the Work
14.3
Owner's Right to Terminate the Contract
14.2, 14.4
Ownership and Use of Drawings, Specifications and Other Instruments of Service
1.1.1, 1.1.6, 1.1.7, **1.5**, 2.3.6, 3.2.2, 3.11, 3.17, 4.2.12, 5.3
Partial Occupancy or Use
9.6.6, **9.9**
Patching, Cutting and
3.14, 6.2.5
Patents
3.17
Payment, Applications for
4.2.5, 7.3.9, 9.2, **9.3**, 9.4, 9.5, 9.6.3, 9.7, 9.8.5, 9.10.1, 14.2.3, 14.2.4, 14.4.3
Payment, Certificates for
4.2.5, 4.2.9, 9.3.3, **9.4**, 9.5, 9.6.1, 9.6.6, 9.7, 9.10.1, 9.10.3, 14.1.1.3, 14.2.4
Payment, Failure of
9.5.1.3, **9.7**, 9.10.2, 13.5, 14.1.1.3, 14.2.1.2
Payment, Final
4.2.1, 4.2.9, **9.10**, 12.3, 14.2.4, 14.4.3
Payment Bond, Performance Bond and
7.3.4.4, 9.6.7, 9.10.3, **11.1.2**
Payments, Progress
9.3, **9.6**, 9.8.5, 9.10.3, 14.2.3, 15.1.4
PAYMENTS AND COMPLETION
9
Payments to Subcontractors
5.4.2, 9.5.1.3, 9.6.2, 9.6.3, 9.6.4, 9.6.7, 14.2.1.2
PCB
10.3.1
Performance Bond and Payment Bond
7.3.4.4, 9.6.7, 9.10.3, **11.1.2**
Permits, Fees, Notices and Compliance with Laws
2.3.1, **3.7**, 3.13, 7.3.4.4, 10.2.2
PERSONS AND PROPERTY, PROTECTION OF
10
Polychlorinated Biphenyl
10.3.1
Product Data, Definition of
3.12.2
Product Data and Samples, Shop Drawings
3.11, **3.12**, 4.2.7
Progress and Completion
4.2.2, **8.2**, 9.8, 9.9.1, 14.1.4, 15.1.4
Progress Payments
9.3, **9.6**, 9.8.5, 9.10.3, 14.2.3, 15.1.4
Project, Definition of
1.1.4
Project Representatives
4.2.10
Property Insurance
10.2.5, **11.2**
Proposal Requirements
1.1.1
PROTECTION OF PERSONS AND PROPERTY
10

AIA Document A201™ – 2017. Copyright © 1911, 1915, 1918, 1925, 1937, 1951, 1958, 1961, 1963, 1966, 1970, 1976, 1987, 1997, 2007 and 2017 by The American Institute of Architects. **All rights reserved. WARNING: This AIA® Document is protected by U.S. Copyright Law and International Treaties. Unauthorized reproduction or distribution of this AIA® Document, or any portion of it, may result in severe civil and criminal penalties, and will be prosecuted to the maximum extent possible under the law.** This draft was produced by AIA software at 09:54:27 on 07/24/2018 under Order No.9799823797 which expires on 01/19/2019, and is not for resale.
User Notes: (913728330)

Regulations and Laws
1.5, 2.3.2, 3.2.3, 3.6, 3.7, 3.12.10, 3.13, 9.6.4, 9.9.1, 10.2.2, 13.1, 13.3, 13.4.1, 13.4.2, 13.5, 14, 15.2.8, 15.4
Rejection of Work
4.2.6, 12.2.1
Releases and Waivers of Liens
9.3.1, 9.10.2
Representations
3.2.1, 3.5, 3.12.6, 8.2.1, 9.3.3, 9.4.2, 9.5.1, 9.10.1
Representatives
2.1.1, 3.1.1, 3.9, 4.1.1, 4.2.10, 13.2.1
Responsibility for Those Performing the Work
3.3.2, 3.18, 4.2.2, 4.2.3, 5.3, 6.1.3, 6.2, 6.3, 9.5.1, 10
Retainage
9.3.1, 9.6.2, 9.8.5, 9.9.1, 9.10.2, 9.10.3
Review of Contract Documents and Field Conditions by Contractor
3.2, 3.12.7, 6.1.3
Review of Contractor's Submittals by Owner and Architect
3.10.1, 3.10.2, 3.11, 3.12, 4.2, 5.2, 6.1.3, 9.2, 9.8.2
Review of Shop Drawings, Product Data and Samples by Contractor
3.12
Rights and Remedies
1.1.2, 2.4, 2.5, 3.5, 3.7.4, 3.15.2, 4.2.6, 5.3, 5.4, 6.1, 6.3, 7.3.1, 8.3, 9.5.1, 9.7, 10.2.5, 10.3, 12.2.1, 12.2.2, 12.2.4, **13.3**, 14, 15.4
Royalties, Patents and Copyrights
3.17
Rules and Notices for Arbitration
15.4.1
Safety of Persons and Property
10.2, 10.4
Safety Precautions and Programs
3.3.1, 4.2.2, 4.2.7, 5.3, **10.1**, 10.2, 10.4
Samples, Definition of
3.12.3
Samples, Shop Drawings, Product Data and
3.11, **3.12**, 4.2.7
Samples at the Site, Documents and
3.11
Schedule of Values
9.2, 9.3.1
Schedules, Construction
3.10, 3.12.1, 3.12.2, 6.1.3, 15.1.6.2
Separate Contracts and Contractors
1.1.4, 3.12.5, 3.14.2, 4.2.4, 4.2.7, 6, 8.3.1, 12.1.2
Separate Contractors, Definition of
6.1.1
Shop Drawings, Definition of
3.12.1
Shop Drawings, Product Data and Samples
3.11, **3.12**, 4.2.7
Site, Use of
3.13, 6.1.1, 6.2.1
Site Inspections
3.2.2, 3.3.3, 3.7.1, 3.7.4, 4.2, 9.9.2, 9.4.2, 9.10.1, 13.4
Site Visits, Architect's
3.7.4, 4.2.2, 4.2.9, 9.4.2, 9.5.1, 9.9.2, 9.10.1, 13.4
Special Inspections and Testing
4.2.6, 12.2.1, 13.4
Specifications, Definition of
1.1.6
Specifications
1.1.1, **1.1.6**, 1.2.2, 1.5, 3.12.10, 3.17, 4.2.14
Statute of Limitations
15.1.2, 15.4.1.1
Stopping the Work
2.2.2, 2.4, 9.7, 10.3, 14.1
Stored Materials
6.2.1, 9.3.2, 10.2.1.2, 10.2.4
Subcontractor, Definition of
5.1.1
SUBCONTRACTORS
5
Subcontractors, Work by
1.2.2, 3.3.2, 3.12.1, 3.18, 4.2.3, 5.2.3, 5.3, 5.4, 9.3.1.2, 9.6.7
Subcontractual Relations
5.3, 5.4, 9.3.1.2, 9.6, 9.10, 10.2.1, 14.1, 14.2.1
Submittals
3.10, 3.11, 3.12, 4.2.7, 5.2.1, 5.2.3, 7.3.4, 9.2, 9.3, 9.8, 9.9.1, 9.10.2, 9.10.3
Submittal Schedule
3.10.2, 3.12.5, 4.2.7
Subrogation, Waivers of
6.1.1, **11.3**
Substances, Hazardous
10.3
Substantial Completion
4.2.9, 8.1.1, 8.1.3, 8.2.3, 9.4.2, **9.8**, 9.9.1, 9.10.3, 12.2, 15.1.2
Substantial Completion, Definition of
9.8.1
Substitution of Subcontractors
5.2.3, 5.2.4
Substitution of Architect
2.3.3
Substitutions of Materials
3.4.2, 3.5, 7.3.8
Sub-subcontractor, Definition of
5.1.2
Subsurface Conditions
3.7.4
Successors and Assigns
13.2
Superintendent
3.9, 10.2.6
Supervision and Construction Procedures
1.2.2, **3.3**, 3.4, 3.12.10, 4.2.2, 4.2.7, 6.1.3, 6.2.4, 7.1.3, 7.3.4, 8.2, 8.3.1, 9.4.2, 10, 12, 14, 15.1.4

AIA Document A201™ – 2017. Copyright © 1911, 1915, 1918, 1925, 1937, 1951, 1958, 1961, 1963, 1966, 1970, 1976, 1987, 1997, 2007 and 2017 by The American Institute of Architects. **All rights reserved. WARNING: This AIA® Document is protected by U.S. Copyright Law and International Treaties. Unauthorized reproduction or distribution of this AIA® Document, or any portion of it, may result in severe civil and criminal penalties, and will be prosecuted to the maximum extent possible under the law.** This draft was produced by AIA software at 09:54:27 on 07/24/2018 under Order No.9799823797 which expires on 01/19/2019, and is not for resale.
User Notes: (913728330)

Suppliers
1.5, 3.12.1, 4.2.4, 4.2.6, 5.2.1, 9.3, 9.4.2, 9.5.4, 9.6, 9.10.5, 14.2.1
Surety
5.4.1.2, 9.6.8, 9.8.5, 9.10.2, 9.10.3, 11.1.2, 14.2.2, 15.2.7
Surety, Consent of
9.8.5, 9.10.2, 9.10.3
Surveys
1.1.7, 2.3.4
Suspension by the Owner for Convenience
14.3
Suspension of the Work
3.7.5, 5.4.2, 14.3
Suspension or Termination of the Contract
5.4.1.1, 14
Taxes
3.6, 3.8.2.1, 7.3.4.4
Termination by the Contractor
14.1, 15.1.7
Termination by the Owner for Cause
5.4.1.1, **14.2,** 15.1.7
Termination by the Owner for Convenience
14.4
Termination of the Architect
2.3.3
Termination of the Contractor Employment
14.2.2

TERMINATION OR SUSPENSION OF THE CONTRACT
14
Tests and Inspections
3.1.3, 3.3.3, 3.7.1, 4.2.2, 4.2.6, 4.2.9, 9.4.2, 9.8.3, 9.9.2, 9.10.1, 10.3.2, 12.2.1, **13.4**
TIME
8
Time, Delays and Extensions of
3.2.4, 3.7.4, 5.2.3, 7.2.1, 7.3.1, 7.4, **8.3**, 9.5.1, 9.7, 10.3.2, 10.4, 14.3.2, 15.1.6, 15.2.5
Time Limits
2.1.2, 2.2, 2.5, 3.2.2, 3.10, 3.11, 3.12.5, 3.15.1, 4.2, 5.2, 5.3, 5.4, 6.2.4, 7.3, 7.4, 8.2, 9.2, 9.3.1, 9.3.3, 9.4.1, 9.5, 9.6, 9.7, 9.8, 9.9, 9.10, 12.2, 13.4, 14, 15.1.2, 15.1.3, 15.4
Time Limits on Claims
3.7.4, 10.2.8, 15.1.2, 15.1.3
Title to Work
9.3.2, 9.3.3
UNCOVERING AND CORRECTION OF WORK
12
Uncovering of Work
12.1
Unforeseen Conditions, Concealed or Unknown
3.7.4, 8.3.1, 10.3
Unit Prices
7.3.3.2, 9.1.2
Use of Documents
1.1.1, 1.5, 2.3.6, 3.12.6, 5.3
Use of Site
3.13, 6.1.1, 6.2.1
Values, Schedule of
9.2, 9.3.1
Waiver of Claims by the Architect
13.3.2
Waiver of Claims by the Contractor
9.10.5, 13.3.2, **15.1.7**
Waiver of Claims by the Owner
9.9.3, 9.10.3, 9.10.4, 12.2.2.1, 13.3.2, 14.2.4, **15.1.7**
Waiver of Consequential Damages
14.2.4, 15.1.7
Waiver of Liens
9.3, 9.10.2, 9.10.4
Waivers of Subrogation
6.1.1, **11.3**
Warranty
3.5, 4.2.9, 9.3.3, 9.8.4, 9.9.1, 9.10.2, 9.10.4, 12.2.2, 15.1.2
Weather Delays
8.3, 15.1.6.2
Work, Definition of
1.1.3
Written Consent
1.5.2, 3.4.2, 3.7.4, 3.12.8, 3.14.2, 4.1.2, 9.3.2, 9.10.3, 13.2, 13.3.2, 15.4.4.2
Written Interpretations
4.2.11, 4.2.12
Written Orders
1.1.1, 2.4, 3.9, 7, 8.2.2, 12.1, 12.2, 13.4.2, 14.3.1

AIA Document A201™ – 2017. Copyright © 1911, 1915, 1918, 1925, 1937, 1951, 1958, 1961, 1963, 1966, 1970, 1976, 1987, 1997, 2007 and 2017 by The American Institute of Architects. **All rights reserved. WARNING: This AIA® Document is protected by U.S. Copyright Law and International Treaties. Unauthorized reproduction or distribution of this AIA® Document, or any portion of it, may result in severe civil and criminal penalties, and will be prosecuted to the maximum extent possible under the law.** This draft was produced by AIA software at 09:54:27 on 07/24/2018 under Order No.9799823797 which expires on 01/19/2019, and is not for resale.
User Notes: (913728330)

NOTE: THE WORD "CONTRACTOR" SHALL MEAN THE PRIME CONTRACTOR WITH WHOM THE CONTRACT HAS BEEN EXECUTED.

ARTICLE 1 GENERAL PROVISIONS

§ 1.1 Basic Definitions

§ 1.1.1 The Contract Documents

The Contract Documents are enumerated in the Agreement between the Owner and Contractor (hereinafter the Agreement) and consist of the Agreement, Conditions of the Contract (General, Supplementary and other Conditions), Drawings, Specifications, Addenda issued prior to execution of the Contract, other documents listed in the Agreement, and Modifications issued after execution of the Contract. A Modification is (1) a written amendment to the Contract signed by both parties, (2) a Change Order, (3) a Construction Change Directive, or (4) a written order for a minor change in the Work issued by the Architect. ~~Unless specifically enumerated in the Agreement, the Contract Documents do not include the advertisement or invitation to bid, Instructions to Bidders, sample forms, other information furnished by the Owner in anticipation of receiving bids or proposals, the Contractor's bid or proposal, or portions of Addenda relating to bidding or proposal requirements.~~

§1.1.1.1 The Contract Documents shall include the Bidding Requirements, including, but not be limited to advertisement or Invitation to Bid, Instructions to Bidders, the Contractor's Bid Proposal Form and other bidding forms, Addenda or portions of the Addenda relating to any Bidding Documents. The Contract Documents shall apply to all Prime Contractors for the Project and each Prime Contractor is responsible for the content of all.

§ 1.1.2 The Contract

The Contract Documents form the Contract for Construction. The Contract represents the entire and integrated agreement between the parties hereto and supersedes prior negotiations, representations, or agreements, either written or oral. The Contract may be amended or modified only by a Modification. The Contract Documents shall not be construed to create a contractual relationship of any kind (1) between the Contractor and the Architect or the Architect's consultants, (2) between the Owner and a Subcontractor or a Sub-subcontractor, (3) between the Owner and the Architect or the Architect's consultants, or (4) between any persons or entities other than the Owner and the Contractor. The Architect shall, however, be entitled to performance and enforcement of obligations under the Contract intended to facilitate performance of the Architect's duties.

§1.1.2.1 The Contractor acknowledges and warrants that it has closely examined all of the Contract Documents, that they are suitable and sufficient to enable the Contractor to complete the Work in a timely manner for the Contract Sum, and that they include all Work, whether or not shown or described, which reasonably may be inferred to be required or useful for the completion of the Work in full compliance with all applicable codes, laws, ordinances and regulations and that questions regarding the bid documents and any interpretation(s) regarding same have been asked by the contractor, in the form and manner required in the instructions to bidders.

§ 1.1.3 The Work

The term "Work" means the construction and services required by the Contract Documents, whether completed or partially completed, and includes all other labor, materials, equipment, and services provided or to be provided by the Contractor to fulfill the Contractor's obligations. The Work may constitute the whole or a part of the Project.

§1.1.3.1 It is strongly encouraged for the Contractor to visit the site of the Project before submitting a bid. Such site visit shall be for the purpose of familiarizing the Contractor with the conditions as they exist and the character of the operations to be carried on under the Contract Documents, including all existing site conditions, access to the site, physical characteristics of the site and surrounding areas.

§1.1.3.2 Nothing in these General Conditions shall be interpreted as imposing on either the Owner or Architect, or their respective agents, employees, officers, directors or consultants, any duty, obligation or authority with respect to any items that are not intended to be incorporated into the completed project, including but not limited to shoring, scaffolding, hoists, temporary weatherproofing, or any temporary facility or temporary activity, since these are the sole responsibility of the Contractor.

AIA Document A201™ – 2017. Copyright © 1911, 1915, 1918, 1925, 1937, 1951, 1958, 1961, 1963, 1966, 1970, 1976, 1987, 1997, 2007 and 2017 by The American Institute of Architects. **All rights reserved. WARNING: This AIA® Document is protected by U.S. Copyright Law and International Treaties. Unauthorized reproduction or distribution of this AIA® Document, or any portion of it, may result in severe civil and criminal penalties, and will be prosecuted to the maximum extent possible under the law.** This draft was produced by AIA software at 09:54:27 on 07/24/2018 under Order No.9799823797 which expires on 01/19/2019, and is not for resale.
User Notes: (913728330)

§ 1.1.4 The Project

The Project is the total construction of which the Work performed under the Contract Documents may be the whole or a part and which may include construction by the Owner and by Separate Contractors.

§ 1.1.5 The Drawings

The Drawings are the graphic and pictorial portions of the Contract Documents showing the design, location and dimensions of the Work, generally including plans, elevations, sections, details, schedules, and diagrams.

§ 1.1.5.1 The Drawings are diagrammatical and show the general arrangement and extent of the Work; exact locations and arrangements of parts shall be determined as the Work progresses and shall be subject to the Architect's approval.

.1 The right is reserved by the Architect to make any reasonable change in location of equipment, ductwork, and piping prior to roughing in without involving additional expense to the Owner.
.2 Contractor shall coordinate his Work with the Work of others and shall be responsible for the coordination work, so that interference between mechanical, electrical and other work and architectural and structural work does not occur.
.3 Contractor shall furnish and install supports, hangers, offsets, bends, turns, and the like in connection with this Work to avoid interference with work of other Contractors, to conceal Work where required, and to secure necessary clearance and access for operation and maintenance without involving additional expense to the Owner.

§ 1.1.6 The Specifications

The Specifications are that portion of the Contract Documents consisting of the written requirements for materials, equipment, systems, standards and workmanship for the Work, and performance of related services.

§ 1.1.7 Instruments of Service

Instruments of Service are representations, in any medium of expression now known or later developed, of the tangible and intangible creative work performed by the Architect and the Architect's consultants under their respective professional services agreements. Instruments of Service may include, without limitation, studies, surveys, models, sketches, drawings, specifications, and other similar materials.

§ 1.1.8 Initial Decision Maker

The Initial Decision Maker is the person identified in the Agreement to render initial decisions on Claims in accordance with Section 15.2. The Initial Decision Maker shall not show partiality to the Owner or Contractor and shall not be liable for results of interpretations or decisions rendered in good faith. ***The Architect shall be the Initial Decision Maker.***

§ 1.2 Correlation and Intent of the Contract Documents

§ 1.2.1 The intent of the Contract Documents is to include all items necessary for the proper execution and completion of the Work by the Contractor. The Contract Documents are complementary, and what is required by one shall be as binding as if required by all; performance by the Contractor shall be required only to the extent consistent with the Contract Documents and reasonably inferable from them as being necessary to produce the indicated results.

~~**§ 1.2.1.1** The invalidity of any provision of the Contract Documents shall not invalidate the Contract or its remaining provisions. If it is determined that any provision of the Contract Documents violates any law, or is otherwise invalid or unenforceable, then that provision shall be revised to the extent necessary to make that provision legal and enforceable. In such case the Contract Documents shall be construed, to the fullest extent permitted by law, to give effect to the parties' intentions and purposes in executing the Contract.~~

§1.2.1.1 The general character of the detail work is shown on the drawings, but minor modifications may be made in large scale details. Where the word "similar" occurs on the drawings it shall be used in its general sense and not as meaning identical, and all details shall be worked out in relation to their location and their connection to other parts of the work.

.1 Where on any drawings a portion of the work is drawn out and the remainder is indicated in outline, the parts drawn out shall apply also to other like portions of the work.

AIA Document A201™ – 2017. Copyright © 1911, 1915, 1918, 1925, 1937, 1951, 1958, 1961, 1963, 1966, 1970, 1976, 1987, 1997, 2007 and 2017 by The American Institute of Architects. **All rights reserved. WARNING: This AIA® Document is protected by U.S. Copyright Law and International Treaties. Unauthorized reproduction or distribution of this AIA® Document, or any portion of it, may result in severe civil and criminal penalties, and will be prosecuted to the maximum extent possible under the law.** This draft was produced by AIA software at 09:54:27 on 07/24/2018 under Order No.9799823797 which expires on 01/19/2019, and is not for resale.
User Notes: (913728330)

.2 Where detail is indicated by starting only, such detail shall be continued throughout the courses or parts in which it occurs and shall also apply to all other similar parts in the work unless otherwise indicated.
.3 In case of differences between small and large-scale drawings, the larger scale drawings shall take precedence. Dimensions given shall take precedence over scale measurements.
.4 Any discrepancies or questions as to the application of, and interpretations related to 1.2.1.1, shall be referred to the Architect for adjustment before any work affected thereby has been performed.

§1.2.1.2 During the course of the work, should any ambiguities or discrepancies be found in the Specifications or on the Drawings; or should there be found any discrepancies between the Drawings and Specifications to which the Contractor has failed to call attention before submitting his bid, then the Architect will interpret the intent of the Drawings and Specifications; and the Contractor hereby agrees to abide by the Architect's interpretation and to carry out the work in accordance with the decision of the Architect.

§1.2.1.3 It is expressly stipulated that neither the Drawings nor the Specifications shall take precedence over the other, and it is further stipulated that the Architect may interpret or construe the Drawings and Specifications so as to secure in all cases the result most consistent with the needs and requirements of the work. In the event of such ambiguity or discrepancy subject to any Architect's interpretation, the Contractor shall comply with the more stringent requirement, and supply the better quality or greater quantity of work.

§ 1.2.2 Organization of the Specifications into divisions, sections and articles, and arrangement of Drawings shall not control the Contractor in dividing the Work among Subcontractors or in establishing the extent of Work to be performed by any trade.

§1.2.2.1 The various materials and products specified in the specifications by name or description are given to establish a standard of quality and of cost for bid purposes. It is not the intent to limit the acceptance to any one material or product specified, but rather to name or describe it as the absolute minimum standard that is desired and acceptable, all determinations as to equality of a proposed product or material shall be at the discretion of the Architect and/or the Owner.

.1 A material or product of lesser quality will not be acceptable.
.2 Where "Basis of Design" products or manufacturer's names are used, whether or not followed by the words "or approved equal," they shall be subject to approved equals and authorized only by the Architect and/or the Owner.

§1.2.2.2 Substitutions lowering performance, quality, method of assembly or installation, or in general not in keeping with details and specifications, will not be permitted. Refer to substitution procedure indicated elsewhere in the Contract Documents.

§1.2.2.3 It is understood when a bid for any product or material is submitted, the bidder is aware of specified requirements and all materials or products within his bid are equal or better than such specified items.

§1.2.2.4 In addition to the Specifications, it shall be understood that details on Drawings shall become part of the Specification in determining the required "standard of quality."

§1.2.2.5 If a conflict occurs between Drawing details and Specifications, bidder during bidding process and/or Contractor shall bring such conflicts to the attention of the Architect in accordance with applicable requirements indicated elsewhere in other sections of Contract Documents.

§ 1.2.3 Unless otherwise stated in the Contract Documents, words that have well-known technical or construction industry meanings are used in the Contract Documents in accordance with such recognized meanings.

§ 1.3 Capitalization

Terms capitalized in these General Conditions include those that are (1) specifically defined, (2) the titles of numbered articles, or (3) the titles of other documents published by the American Institute of Architects.

AIA Document A201™ – 2017. Copyright © 1911, 1915, 1918, 1925, 1937, 1951, 1958, 1961, 1963, 1966, 1970, 1976, 1987, 1997, 2007 and 2017 by The American Institute of Architects. **All rights reserved. WARNING: This AIA® Document is protected by U.S. Copyright Law and International Treaties. Unauthorized reproduction or distribution of this AIA® Document, or any portion of it, may result in severe civil and criminal penalties, and will be prosecuted to the maximum extent possible under the law.** This draft was produced by AIA software at 09:54:27 on 07/24/2018 under Order No.9799823797 which expires on 01/19/2019, and is not for resale.
User Notes: (913728330)

§ 1.4 Interpretation
In the interest of brevity the Contract Documents frequently omit modifying words such as "all" and "any" and articles such as "the" and "an," but the fact that a modifier or an article is absent from one statement and appears in another is not intended to affect the interpretation of either statement.

§ 1.5 Ownership and Use of Drawings, Specifications, and Other Instruments of Service
§ 1.5.1 The Architect and the Architect's consultants shall be deemed the authors and owners of their respective Instruments of Service, including the Drawings and Specifications, and retain all common law, statutory, and other reserved rights in their Instruments of Service, including copyrights. The Contractor, Subcontractors, Sub-subcontractors, and suppliers shall not own or claim a copyright in the Instruments of Service. Submittal or distribution to meet official regulatory requirements or for other purposes in connection with the Project is not to be construed as publication in derogation of the Architect's or Architect's consultants' reserved rights.

§ 1.5.2 The Contractor, Subcontractors, Sub-subcontractors, and suppliers are authorized to use and reproduce the Instruments of Service provided to them, subject to any protocols established pursuant to Sections 1.7 and 1.8, solely and exclusively for execution of the Work. All copies made under this authorization shall bear the copyright notice, if any, shown on the Instruments of Service. The Contractor, Subcontractors, Sub-subcontractors, and suppliers may not use the Instruments of Service on other projects or for additions to the Project outside the scope of the Work without the specific written consent of the Owner, Architect, and the Architect's consultants. ***Drawings, specifications and other documents, including those in electronic form, prepared by the Architect and the Architect's consultants are Instruments of Service for use solely with respect to this Project, except that Owner shall be authorized to use any Instruments of Service for future additions or alterations to this Project or for other Projects. The Architect and the Architect's consultants shall be deemed the authors and owners of their respective Instruments of Service and shall retain all common law, statutory and other reserved rights, including copyrights.***

§ 1.5.3 The Contractor will be furnished free of charge two (2) sets of signed and sealed drawings and specifications. If more documents are required by the Contractor, the additional documents may be obtained at the cost of $2.00 per sheet and $100.00 per specification.

§ 1.6 Notice
§ 1.6.1 Except as otherwise provided in Section 1.6.2, where the Contract Documents require one party to notify or give notice to the other party, such notice shall be provided in writing to the designated representative of the party to whom the notice is addressed and shall be deemed to have been duly served if delivered in person, by mail, by courier, or by electronic transmission if a method for electronic transmission is set forth in the Agreement.

§ 1.6.2 Notice of Claims as provided in Section 15.1.3 shall be provided in writing and shall be deemed to have been duly served only if delivered to the designated representative of the party to whom the notice is addressed by certified or registered mail, or by courier providing proof of delivery.

§ 1.7 Digital Data Use and Transmission
The parties shall agree upon protocols governing the transmission and use of Instruments of Service or any other information or documentation in digital form. ~~The parties will use AIA Document E203™–2013, Building Information Modeling and Digital Data Exhibit, to establish the protocols for the development, use, transmission, and exchange of digital data.~~

~~**§ 1.8 Building Information Models Use and Reliance**~~
~~Any use of, or reliance on, all or a portion of a building information model without agreement to protocols governing the use of, and reliance on, the information contained in the model and without having those protocols set forth in AIA Document E203™–2013, Building Information Modeling and Digital Data Exhibit, and the requisite AIA Document G202™–2013, Project Building Information Modeling Protocol Form, shall be at the using or relying party's sole risk and without liability to the other party and its contractors or consultants, the authors of, or contributors to, the building information model, and each of their agents and employees.~~

§ 1.9 EXECUTION OF CONTRACT DOCUMENTS

AIA Document A201™ – 2017. Copyright © 1911, 1915, 1918, 1925, 1937, 1951, 1958, 1961, 1963, 1966, 1970, 1976, 1987, 1997, 2007 and 2017 by The American Institute of Architects. **All rights reserved. WARNING: This AIA® Document is protected by U.S. Copyright Law and International Treaties. Unauthorized reproduction or distribution of this AIA® Document, or any portion of it, may result in severe civil and criminal penalties, and will be prosecuted to the maximum extent possible under the law.** This draft was produced by AIA software at 09:54:27 on 07/24/2018 under Order No.9799823797 which expires on 01/19/2019, and is not for resale.
User Notes: (913728330)

§ 1.9.1 The Contract Documents shall be signed by the Owner and Contractor. If either the Owner or Contractor or both do not sign all the Contract Documents, the Architect shall identify such unsigned Documents upon request. The Agreement shall be signed in not less than triplicate by the Owner and Contractor.

§ 1.9.2 Execution of the Contract by the Contractor is a representation that said Contract Documents are full and complete, are sufficient to have enabled the Contractor to determine the cost of the Work therein to enter into the Contract and that the Contract Documents are sufficient to enable it to construct the Work outlined therein, and otherwise to fulfill all its obligations hereunder, including, but not limited to, Contractor's obligation to construct the Work for an amount not in excess of the Contract Sum on or before the date(s) of Substantial Completion established in the Agreement. The Contractor further acknowledges and declares that it has visited and examined the site, examined all physical, legal, and other conditions affecting the Work and is fully familiar with all of the conditions thereon and thereunder affecting the same. In connection therewith, Contractor specifically represents and warrants to Owner that it has, by careful examination, satisfied itself as to: (1) the nature, location and character of the Project and the site, including, without limitation, the surface and subsurface conditions of the site and all structures and obstructions thereon and thereunder, both natural and man-made, and all surface and subsurface water conditions of the site and the surrounding area; (2) the nature, location, and character of the general area in which the Project is located, including without limitation, its climatic conditions, available labor supply and labor costs, and available equipment supply and equipment costs; and (3) the quality and quantity of all materials, supplies, tools, equipment, labor, and professional services necessary to complete the Work in the manner and within the cost and time frame required by the Contract Documents. In connection with the foregoing, and having carefully examined all Contract Documents, as aforesaid, and having visited the site, the contractor acknowledges and declares that it has no knowledge of any discrepancies, omissions, ambiguities, or conflicts in said Contract Documents and that if it becomes aware of any such discrepancies, omissions, ambiguities, or conflicts, it will promptly notify Owner and Architect of such fact.

§ 1.9.3 The Contract Documents include all items necessary for the proper execution and completion of the Work by the Contractor. The Work shall consist of all items specifically included in the Contract Documents as well as all additional items of work which are reasonable inferable from that which is specified in order to complete the Work in accordance with the Contract Documents. The Contract Documents are complementary, and what is required by any one Contract Document shall be as binding as if required by all. Any differences between the requirements of the Drawings and the Specifications or any differences noted within the Drawings themselves or within the Specifications themselves have been referred to the Owner and Architect by Contractor prior to the submission of bids and have been clarified by an Addendum issued to all bidders.

If any such differences or conflicts were not called to the Owner's and Architect's attention prior to submission of bids, the Architect shall decide which of the conflicting requirements will govern based upon the most stringent of the requirements, and, subject to the approval of the Owner, the Contractor shall perform the Work at no additional cost and/or time to the Owner in accordance with the Architect's decision. Work not covered in the Contract Documents will not be required unless it is consistent therewith and is reasonable inferable therefrom as being necessary to produce the intended results.

1.9.3.1 The term "reasonably inferable" includes work necessary to "provide" work indicated or specified, as defined in section: Definitions and Standards; that is: furnish and install, complete, in place and ready for use.

1.9.3.2 Details referenced to portions of the Work shall apply to other like portions of the Work not otherwise detailed.

1.9.3.3 The Contractor shall request, from the Architect/Engineer's interpretation of apparent discrepancies, conflicts, or omissions in the Specifications and Drawings. Subcontractors shall forward such requests through the Contractor. Such requests, and the Architect/Engineer's interpretation, shall be in written form; other forms of communications shall be used to expedite resolution of concerns, but will not be binding.

§1.9.4 Explanatory notes shall take precedence over conflicting drawn note indications. Large scale drawings shall take precedence over small scale drawings. Figured dimensions shall take precedence over scaled measurements. Should contradictions be found, the Architect shall determine which indication is correct.

§1.9.5 When more than one material, brand, or process is specified for a particular item of Work, the choice shall be the Contractor's. Contractor may, after notifying the Architect and Owner, select the one it considers to be the

AIA Document A201™ – 2017. Copyright © 1911, 1915, 1918, 1925, 1937, 1951, 1958, 1961, 1963, 1966, 1970, 1976, 1987, 1997, 2007 and 2017 by The American Institute of Architects. **All rights reserved. WARNING: This AIA® Document is protected by U.S. Copyright Law and International Treaties. Unauthorized reproduction or distribution of this AIA® Document, or any portion of it, may result in severe civil and criminal penalties, and will be prosecuted to the maximum extent possible under the law.** This draft was produced by AIA software at 09:54:27 on 07/24/2018 under Order No.9799823797 which expires on 01/19/2019, and is not for resale.
User Notes: (913728330)

best. Approval by Architect or Owner of materials, suppliers, processes, or Subcontractors does not imply a waiver of any Contract requirements including, without limitation, Contractor's warranty.

§1.9.6 In all cases, the details, drawings, and specifications shall be checked with existing conditions and with work in place, and variations, if any, shall be referred by the Contractor to the Architect for adjustment, as the Contractor will be responsible for the fit or work in place.

§1.9.7 When a profile, section or other finished condition is shown, furring or other method of obtaining such finished conditions shall be provided. The drawings may show work fully drawn out or only a portion thereof, the remainder being in outline. The drawn-out portions apply to other like or similar places.

§1.9.8 Where it is required in the specifications that materials, products, processes, equipment, or the like be installed or applied in accordance with manufacturers' instructions, directions, or specifications, or words to this effect, it shall be construed to mean that said application or installation shall be in strict accordance with printed material concerned for use under conditions similar to those at the job site. Three copies of such instructions shall be furnished to the Architect and his written approval thereof obtained before work is begun.

§1.9.9 Any material specified by reference to the number, symbol, or title of a Commercial Standard, Federal Specification, ASTM Specification, trade association standard, or other similar standards, shall comply with the requirements in the latest revision thereof and any amendments or supplements thereto in effect one month prior to the date on which bids are opened and read, except as limited to type, class, or grade, or modified in such reference. The standards referred to, except as modified in the specifications, shall have full force and effect as though printed in the specifications. The Architect will furnish upon request information as to how copies of the standards referred to may be obtained.

ARTICLE 2 OWNER

§ 2.1 General

§ 2.1.1 The Owner is the person or entity identified as such in the Agreement and is referred to throughout the Contract Documents as if singular in number. The Owner shall designate in writing a representative who shall have express authority to bind the Owner with respect to all matters requiring the Owner's approval or authorization. Except as otherwise provided in Section 4.2.1, the Architect does not have such authority. The term "Owner" means the Owner or the Owner's authorized representative.

§ 2.1.2 The Owner shall furnish to the Contractor, within fifteen days after receipt of a written request, information necessary and relevant for the Contractor to evaluate, give notice of, or enforce mechanic's lien rights. Such information shall include a correct statement of the record legal title to the property on which the Project is located, usually referred to as the site, and the Owner's interest therein.

~~**§ 2.2 Evidence of the Owner's Financial Arrangements**~~

~~**§ 2.2.1** Prior to commencement of the Work and upon written request by the Contractor, the Owner shall furnish to the Contractor reasonable evidence that the Owner has made financial arrangements to fulfill the Owner's obligations under the Contract. The Contractor shall have no obligation to commence the Work until the Owner provides such evidence. If commencement of the Work is delayed under this Section 2.2.1, the Contract Time shall be extended appropriately.~~

~~**§ 2.2.2** Following commencement of the Work and upon written request by the Contractor, the Owner shall furnish to the Contractor reasonable evidence that the Owner has made financial arrangements to fulfill the Owner's obligations under the Contract only if (1) the Owner fails to make payments to the Contractor as the Contract Documents require; (2) the Contractor identifies in writing a reasonable concern regarding the Owner's ability to make payment when due; or (3) a change in the Work materially changes the Contract Sum. If the Owner fails to provide such evidence, as required, within fourteen days of the Contractor's request, the Contractor may immediately stop the Work and, in that event, shall notify the Owner that the Work has stopped. However, if the request is made because a change in the Work materially changes the Contract Sum under (3) above, the Contractor may immediately stop only that portion of the Work affected by the change until reasonable evidence is provided. If the Work is stopped under this Section 2.2.2, the Contract Time shall be extended appropriately and the Contract Sum shall be increased by the amount of the Contractor's reasonable costs of shutdown, delay and start-up, plus interest as provided in the Contract Documents.~~

AIA Document A201™ – 2017. Copyright © 1911, 1915, 1918, 1925, 1937, 1951, 1958, 1961, 1963, 1966, 1970, 1976, 1987, 1997, 2007 and 2017 by The American Institute of Architects. **All rights reserved. WARNING: This AIA® Document is protected by U.S. Copyright Law and International Treaties. Unauthorized reproduction or distribution of this AIA® Document, or any portion of it, may result in severe civil and criminal penalties, and will be prosecuted to the maximum extent possible under the law.** This draft was produced by AIA software at 09:54:27 on 07/24/2018 under Order No.9799823797 which expires on 01/19/2019, and is not for resale.
User Notes: (913728330)

~~**§ 2.2.3** After the Owner furnishes evidence of financial arrangements under this Section 2.2, the Owner shall not materially vary such financial arrangements without prior notice to the Contractor.~~

~~**§ 2.2.4** Where the Owner has designated information furnished under this Section 2.2 as "confidential," the Contractor shall keep the information confidential and shall not disclose it to any other person. However, the Contractor may disclose "confidential" information, after seven (7) days' notice to the Owner, where disclosure is required by law, including a subpoena or other form of compulsory legal process issued by a court or governmental entity, or by court or arbitrator(s) order. The Contractor may also disclose "confidential" information to its employees, consultants, sureties, Subcontractors and their employees, Sub-subcontractors, and others who need to know the content of such information solely and exclusively for the Project and who agree to maintain the confidentiality of such information.~~

§ 2.3 Information and Services Required of the Owner

§ 2.3.1 Except for permits and fees that are the responsibility of the Contractor under the Contract Documents, including those required under Section 3.7.1, the Owner shall secure and pay for necessary approvals, easements, assessments and charges required for construction, use or occupancy of permanent structures or for permanent changes in existing facilities.

§ 2.3.2 The Owner shall retain an architect lawfully licensed to practice architecture, or an entity lawfully practicing architecture, in the jurisdiction where the Project is located. That person or entity is identified as the Architect in the Agreement and is referred to throughout the Contract Documents as if singular in number.

§ 2.3.3 If the employment of the Architect terminates, the Owner shall employ a successor to whom the Contractor has no reasonable objection and whose status under the Contract Documents shall be that of the Architect.

§ 2.3.4 The Owner shall furnish surveys describing physical characteristics, legal limitations and utility locations for the site of the Project, and a legal description of the site. The Contractor shall be entitled to rely on the accuracy of information furnished by the Owner but shall exercise proper precautions relating to the safe performance of the Work. ***The furnishing of these surveys and the legal description of the site shall not relieve the Contractor from its duties under the Contract Documents. Neither Owner nor the Architect shall be required to furnish Contractor with any information concerning subsurface characteristics, utilities or conditions of the areas where the Work is to be performed. When the Owner or Architect has made investigations of subsurface characteristics or conditions of the areas where the Work is to be performed, such investigations, if any, were made solely for the purposes of Owner's study and Architect's design. Neither such investigations nor the records thereof are a part of the Contract between Owner and Contractor. To the extent such investigations or the records thereof are made available to Contractor by the Owner or Architect, such information is furnished solely for the convenience of Contractor. Neither Owner nor Architect assumes any responsibility whatsoever in respect of the sufficiency or accuracy of the investigations thus made, the records thereof, or of the interpretations set forth therein or made by the Owner or Architect in its use thereof, and there is no warranty or guaranty, either express or implied, that the conditions indicated by such investigations or records thereof are representative of those existing throughout the areas where the Work is to be performed, or any part thereof, or that unforeseen developments may not occur, or that materials other than or in proportions different from those indicated may not be encountered. The Contractor shall undertake such further investigations and studies as may be necessary or useful to determine subsurface characteristics and conditions. In connection with the foregoing, Contractor shall be solely responsible for locating (and shall locate prior to performing any Work) all utility lines, telephone company lines and cables, sewer lines, water pipes, gas lines, electrical lines, including, without limitation, all buried pipelines and buried telephone cables and shall perform the Work in such a manner so as to avoid damaging any such lines, cables, pipes, and pipelines.***

§ 2.3.5 The Owner shall furnish information or services required of the Owner by the Contract Documents with reasonable promptness. The Owner shall also furnish any other information or services under the Owner's control and relevant to the Contractor's performance of the Work with reasonable promptness after receiving the Contractor's written request for such information or services.

§ 2.3.6 Unless otherwise provided in the Contract Documents, the Owner shall furnish to the Contractor one copy of the Contract Documents for purposes of making reproductions pursuant to Section 1.5.2 ***and 1.5.3***.

AIA Document A201™ – 2017. Copyright © 1911, 1915, 1918, 1925, 1937, 1951, 1958, 1961, 1963, 1966, 1970, 1976, 1987, 1997, 2007 and 2017 by The American Institute of Architects. **All rights reserved. WARNING: This AIA® Document is protected by U.S. Copyright Law and International Treaties. Unauthorized reproduction or distribution of this AIA® Document, or any portion of it, may result in severe civil and criminal penalties, and will be prosecuted to the maximum extent possible under the law.** This draft was produced by AIA software at 09:54:27 on 07/24/2018 under Order No.9799823797 which expires on 01/19/2019, and is not for resale.
User Notes: (913728330)

§ 2.4 Owner's Right to Stop the Work

If the Contractor fails to correct Work that is not in accordance with the requirements of the Contract Documents as required by Section 12.2 or ~~repeatedly~~ fails to carry out Work in accordance with the Contract Documents, ***or fails or refuses to provide a sufficient amount of properly supervised and coordinated labor, materials, or equipment so as to be able to complete the Work within the Contract Time or fails to remove and discharge (within ten days) any lien filed upon Owner's property by anyone claiming by, through, or under Contractor, or disregards the instructions of Architect or Owner when based on the requirements of the Contract Documents,*** the Owner may issue a written order to the Contractor to stop the Work, or any portion thereof, until the cause for such order has been eliminated; however, the right of the Owner to stop the Work shall not give rise to a duty on the part of the Owner to exercise this right for the benefit of the Contractor or any other person or entity.~~, except to the extent required by Section 6.1.3.~~

§ 2.4.1 The Owner shall have the authority to immediately correct, service, repair, replace or otherwise make operational any component of their facilities including equipment if in the sole discretion of the owner the damaged component is a threat to education, safety or security. The Owner is obligated to put the Contractor on notice of the issue threatening education, safety or security, and their intent to remedy immediately with other resources and to back charge the contractor for the cost of said service, but there are no notice provisions required for the corrective actions necessary to protect the School District.

§ 2.5 Owner's Right to Carry Out the Work

If the Contractor defaults or neglects to carry out the Work in accordance with the Contract Documents and fails within a ~~ten-day~~ ***seven-day*** period after receipt of notice from the Owner to commence and continue correction of such default or neglect with diligence and promptness, the Owner may, without prejudice to other remedies the Owner may have, correct such default or neglect. Such action by the Owner and amounts charged to the Contractor are both subject to prior approval of the Architect and the Architect may, pursuant to Section 9.5.1, withhold or nullify a Certificate for Payment in whole or in part, to the extent reasonably necessary to reimburse the Owner for the reasonable cost of correcting such deficiencies, including Owner's expenses and compensation for the Architect's additional services made necessary by such default, neglect, or failure. If current and future payments are not sufficient to cover such amounts, the Contractor ***and/or his/her Surety*** shall pay the difference to the Owner. ~~If the Contractor disagrees with the actions of the Owner or the Architect, or the amounts claimed as costs to the Owner, the Contractor may file a Claim pursuant to Article 15.~~

§ 2.5.1 The Owner shall have the authority to immediately correct, service, repair, replace or otherwise make operational any component of their facilities including equipment if in the sole discretion of the owner the damaged component is a threat to education, safety or security. The Owner is obligated to put the Contractor on notice of the issue threatening education, safety or security, and their intent to remedy immediately with other resources and to backcharge the contractor for the cost of said service, but there are no notice provisions required for the corrective actions necessary to protect the School District.

ARTICLE 3 CONTRACTOR

§ 3.1 General

§ 3.1.1 The Contractor is the person or entity identified as such in the Agreement and is referred to throughout the Contract Documents as if singular in number. The Contractor shall be lawfully licensed, if required in the jurisdiction where the Project is located. The Contractor shall designate in writing a representative who shall have express authority to bind the Contractor with respect to all matters under this Contract. The term "Contractor" means the Contractor or the Contractor's authorized representative. ***The Term "Contractor" shall mean the respective Prime Contract person or entity identified as such in the Owner Contractor Agreement, for each respective Prime Construction Contract, as responsible for the supervisory control over allocation, coordination of all Subcontractors or trades, performance and completion of all portions of the Work, including cooperation with those doing portions of the Work under Separate Contract with the Owner.***

§ 3.1.2 The Contractor shall perform the Work in accordance with the Contract Documents.

§ 3.1.3 The Contractor shall not be relieved of its obligations to perform the Work in accordance with the Contract Documents either by activities or duties of the Architect in the Architect's administration of the Contract, or by tests, inspections or approvals required or performed by persons or entities other than the Contractor.

AIA Document A201™ – 2017. Copyright © 1911, 1915, 1918, 1925, 1937, 1951, 1958, 1961, 1963, 1966, 1970, 1976, 1987, 1997, 2007 and 2017 by The American Institute of Architects. **All rights reserved. WARNING: This AIA® Document is protected by U.S. Copyright Law and International Treaties. Unauthorized reproduction or distribution of this AIA® Document, or any portion of it, may result in severe civil and criminal penalties, and will be prosecuted to the maximum extent possible under the law.** This draft was produced by AIA software at 09:54:27 on 07/24/2018 under Order No.9799823797 which expires on 01/19/2019, and is not for resale.
User Notes: (913728330)

§ 3.2 Review of Contract Documents and Field Conditions by Contractor

§ 3.2.1 Execution of the Contract by the Contractor is a representation that the Contractor has visited the site, become generally familiar with local conditions under which the Work is to be performed, and correlated personal observations with requirements of the Contract Documents.

.1 If the Contractor requires clarification of the intent of the Contract Documents after award, the Contractor shall be responsible to issue a type written request for information (RFI) to the Architect utilizing the Architect's sample form via acceptable methods set forth in Article 4.2.

.2 All RFI's shall clearly identify the Architect's project number, the construction company's name, author's name, date issued, address, phone numbers, facsimile number and the addressee of the communication.

§ 3.2.2 Because the Contract Documents are complementary, the Contractor shall, before starting each portion of the Work, carefully study and compare the various Contract Documents relative to that portion of the Work, as well as the information furnished by the Owner pursuant to Section 2.3.4, shall take field measurements of any existing conditions related to that portion of the Work, and shall observe any conditions at the site affecting it. These obligations are for the purpose of facilitating coordination and construction by the Contractor and are not for the purpose of discovering errors, omissions, or inconsistencies in the Contract Documents; however, the Contractor shall promptly report to the Architect any errors, inconsistencies or omissions discovered by or made known to the Contractor as a request for information in such form as the Architect may require. It is recognized that the Contractor's review is made in the Contractor's capacity as a contractor and not as a licensed design professional, unless otherwise specifically provided in the Contract Documents. ***In addition to and not in derogation of Contractor's duties under Paragraphs 1.9.2 and 1.9.3, the Contractor shall carefully study and compare the Contract Documents with each other and shall at once report to the Architect errors, inconsistencies or omissions discovered. The Contractor shall not be liable to the Owner or Architect for damage resulting from errors, inconsistencies or omissions in the Contract Documents that could not have been discovered by a prudent and experienced contractor in advance and that are not in the nature of items described in and intended to be covered in Paragraphs 1.9.2 and 1.9., unless the Contractor recognized or reasonably should have recognized such error, inconsistency or omission and failed to report it to the Architect. If the Contractor performs any construction activity involving an error, inconsistency or omission in the Contract Documents that the Contractor recognized or reasonably should have recognized without such notice to the Architect, the Contractor shall assume complete responsibility for such performance and shall bear the full amount of the attributable costs for correction.***

§ 3.2.2.1 If any errors, inconsistencies, or omissions in Contract Documents are recognized or reasonably should have been recognized by the Contractor, any member of its organization, or any of its Subcontractors, the Contractor shall be responsible for notifying the Architect in writing of such error, inconsistency, or omission before proceeding with the Work. The Architect will take such notice under advisement and within a reasonable time commensurate with job progress render a decision. If Contractor fails to give such notice and proceeds with such Work, it shall correct any such errors, inconsistencies, or omissions at no additional cost to the Owner.

§ 3.2.2.2 Conditions Precedent – Notice

.1 Notice of any alleged Conflict that have been reasonably identified prior to submitting a Bid shall be provided to the Architect immediately in order that the Architect in its discretion, may issue an Addendum.

.2 A Bidder's failure to do so constitutes an absolute waiver of any Conflict that may thereafter be asserted with respect thereto, and shall bar any recovery regarding such Conflict.

.3 If any errors, inconsistencies or omissions appear in the drawings, specifications or other Contract Documents, which should reasonably have been discovered and concerning which interpretation had not been obtained from the Architect during the Bidding Period, the Contractor shall within ten (10) days after receiving written "Notice of Award" notify the Architect in writing of such error, inconsistency or omission. In the event the Contractor fails to give such notice, Contractor and its Surety may be required to indemnify Owner for the costs of any such errors, inconsistencies or omissions and the cost of rectifying same including attorney's fees. Interpretation of this procedure after the ten-day period will be made by the Architect and his decision will be final. By Submission of a bid, the Contractor acknowledges that the Contract Documents are full and complete, are sufficient to have enabled it to determine the cost of the Work and that the Drawings, the Specifications and all addenda are sufficient to enable the Contractor to construct the Work outlined therein in accordance with applicable laws,

AIA Document A201™ – 2017. Copyright © 1911, 1915, 1918, 1925, 1937, 1951, 1958, 1961, 1963, 1966, 1970, 1976, 1987, 1997, 2007 and 2017 by The American Institute of Architects. **All rights reserved. WARNING: This AIA® Document is protected by U.S. Copyright Law and International Treaties. Unauthorized reproduction or distribution of this AIA® Document, or any portion of it, may result in severe civil and criminal penalties, and will be prosecuted to the maximum extent possible under the law.** This draft was produced by AIA software at 09:54:27 on 07/24/2018 under Order No.9799823797 which expires on 01/19/2019, and is not for resale.
User Notes: (913728330)

statutes, ordinances, building codes and regulations, and otherwise to fulfill all of its obligations under the Contract Documents.

.4 Contractor acknowledges, except as to any reported error, inconsistencies or omissions, and to concealed or unknown conditions defined in elsewhere, by executing the Agreement, the Contractor represents the following:

.1 The Contract Documents are sufficiently complete and detailed for the Contractor to perform the Work and comply with all requirements of the Contract Documents.

.2 The Work required by the Contract Documents, including, without limitation, all construction details, construction means, methods, procedures, and techniques necessary to perform the Work, use of materials, selection of equipment, and requirements of products by manufacturers are consistent with;

.1 good and sound practices within the construction industry;

.2 generally prevailing and accepted industry standards applicable to Work;

.3 requirements of any warranties applicable to the Work; and

.4 all laws, ordinances, regulations, rules, and orders which bear upon the Contractor's performance of the Work

.3 The Contractor has read, understands and accepts the Contract Documents and its bid was made in accordance with them.

.4 The Contract Sum is based upon the products, materials, systems and equipment required by the Contract Documents without exception. Where the Contract Documents list one or more manufacturer or brand name products, materials, systems and equipment as acceptable, the Contract sum is, in each instance, based upon one of the listed manufacturers or brand name products, materials, systems, and equipment, or, if the contract Sum is based upon the substitution of an "or equal" manufacturer or product, material, system or equipment, the Contractor has in each such instance sought and received the Architect's approval for the substitution either:

.1 prior to the Bid in accordance Architect's Addenda;

.2 after commencement of the Work, under in conformance with substitution procedure elsewhere in the Contract Documents.

.5 The Contract Sum is firm and all inclusive, and no escalation is contemplated for any reason whatsoever.

.1 The Contract Sum includes any and all costs associated with completion by those dates and times, including any and all costs associated with out-of-sequence work, come-back work, stand-by work, stacking of trades, coordination with the schedules and work of separate Contractors, allowing sufficient time, work and storage areas, and site access for separate Contractors to timely progress and complete their work, overtime, expediting and acceleration that may be required to complete the work by those dates and times.

.2 The Contractor has reviewed the completion dates and times, and Milestone Dates set forth in the Contract Documents, agrees that such dates and times are reasonable and commits to achieve them.

.6 The Contractor shall satisfy itself as to the accuracy of all dimensions and locations. In all cases of interconnection of its work with existing or other work, it shall verify at the site, all dimensions relating to such existing or other work. Any errors due to the Contractor's failure to verify all such locations or dimensions shall be promptly rectified by the Contractor without any additional cost to the Owner.

Deviations from the construction documents must be noted by the Prime Contractor at the time of shop drawing submission. Failure to do so will result in the implication of the above Sections 3.2, 3.2.1, 3.2.2 , 3.2.2.1 and 3.2.2.2.

AIA Document A201™ – 2017. Copyright © 1911, 1915, 1918, 1925, 1937, 1951, 1958, 1961, 1963, 1966, 1970, 1976, 1987, 1997, 2007 and 2017 by The American Institute of Architects. **All rights reserved. WARNING: This AIA® Document is protected by U.S. Copyright Law and International Treaties. Unauthorized reproduction or distribution of this AIA® Document, or any portion of it, may result in severe civil and criminal penalties, and will be prosecuted to the maximum extent possible under the law.** This draft was produced by AIA software at 09:54:27 on 07/24/2018 under Order No.9799823797 which expires on 01/19/2019, and is not for resale.
User Notes: (913728330)

§ 3.2.3 The Contractor is not required to ascertain that the Contract Documents are in accordance with applicable laws, statutes, ordinances, codes, rules and regulations, or lawful orders of public authorities, but the Contractor shall promptly report to the Architect any nonconformity discovered by or made known to the Contractor as a request for information in such form as the Architect may require.

§ 3.2.4 If the Contractor believes that additional cost or time is involved because of clarifications or instructions the Architect issues in response to the Contractor's notices or requests for information pursuant to Sections 3.2.2 or 3.2.3, the Contractor shall submit Claims as provided in Article 15. If the Contractor fails to perform the obligations of Sections 3.2.2 or 3.2.3, the Contractor ***and / or his Surety*** shall pay such costs and damages to the Owner, subject to Section 15.1.7, as would have been avoided if the Contractor had performed such obligations. If the Contractor performs those obligations, the Contractor shall not be liable to, ***unless the Contractor recognized such error, inconsistency, omission or difference and knowingly failed to report it to the Architect,*** the Owner or Architect for damages resulting from errors, inconsistencies or omissions in the Contract Documents, for differences between field measurements or conditions and the Contract Documents, or for nonconformities of the Contract Documents to applicable laws, statutes, ordinances, codes, rules and regulations, and lawful orders of public authorities.

§ 3.3 Supervision and Construction Procedures

§ 3.3.1 The Contractor shall supervise and direct the Work, using the Contractor's best skill and attention. The Contractor shall be solely responsible for, and have control over, construction means, methods, techniques, sequences, and procedures, and for coordinating all portions of the Work under the Contract. If the Contract Documents give specific instructions concerning construction means, methods, techniques, sequences, or procedures, the Contractor shall evaluate the jobsite safety thereof and shall be solely responsible for the jobsite safety of such means, methods, techniques, sequences, or procedures. If the Contractor determines that such means, methods, techniques, sequences or procedures may not be safe, the Contractor shall give timely notice to the Owner and Architect, and shall propose alternative means, methods, techniques, sequences, or procedures. The Architect shall evaluate the proposed alternative solely for conformance with the design intent for the completed construction. Unless the Architect objects to the Contractor's proposed alternative, the Contractor shall perform the Work using its alternative means, methods, techniques, sequences, or procedures.

§ 3.3.2 The Contractor shall be responsible to the Owner for acts and omissions of the Contractor's employees, Subcontractors and their agents and employees, and other persons or entities performing portions of the Work for, or on behalf of, the Contractor or any of its Subcontractors.

§ 3.3.3 The Contractor shall be responsible for inspection of portions of Work already performed to determine that such portions are in proper condition to receive subsequent Work.

§ 3.3.4 The Contractor, when requested by the Architect, shall meet with representative of the Architect at all times and furnish all information requested; he shall allow the Architect to inspect the work at all times. Neither the Owner, nor the Architect shall be liable to the Contractor for extra compensation or damages for interference or delays on account of any such meetings, information, or inspections so requested or other acts of the Architect done in good faith and within the scope of their employment by the Owner. In addition, the Contractor is entrusted with the oversight, management control, and general direction of this project to ensure that all contract completion dates are met. In the event that there are any delays caused to any subcontractor on this project, liability shall lie with the Contractor and not with the Owner.

§ 3.3.5 The Contractor has the responsibility to ensure that all material suppliers and Subcontractors, their agents, and employees adhere to the Contract Documents, and that they order materials on time, taking into account the current market and delivery conditions and that they provide materials on time. The Contractor shall coordinate its Work with that of all others on the Project including deliveries, storage, installations, and construction utilities. The Contractor shall be responsible for the space requirements, locations, and routing of its equipment. In areas and locations where the proper and most effective space requirements, locations and routing cannot be made as indicated, the Contractor shall meet with all others involved, before installation, to plan the most effective and efficient method of overall installation.

AIA Document A201™ – 2017. Copyright © 1911, 1915, 1918, 1925, 1937, 1951, 1958, 1961, 1963, 1966, 1970, 1976, 1987, 1997, 2007 and 2017 by The American Institute of Architects. **All rights reserved. WARNING: This AIA® Document is protected by U.S. Copyright Law and International Treaties. Unauthorized reproduction or distribution of this AIA® Document, or any portion of it, may result in severe civil and criminal penalties, and will be prosecuted to the maximum extent possible under the law.** This draft was produced by AIA software at 09:54:27 on 07/24/2018 under Order No.9799823797 which expires on 01/19/2019, and is not for resale.
User Notes: (913728330)

§ 3.3.6 The Contractor shall establish and maintain bench marks and all other grades, lines, and levels necessary for the Work, report errors or inconsistencies to the Architect before commencing Work and review the placement of the building(s) and permanent facilities on the site with the Owner and Architect after all lines are staked out and before foundation Work is started. Contractor shall provide access to the Work for the Owner, the Architect, other persons designated by Owner, and governmental inspectors. Any encroachments made by Contractor or its Subcontractor (of any tier) on adjacent properties due to construction as revealed by an improvement survey, except for encroachments arising from errors or omissions not reasonably discoverable by Contractor in the Contract Documents, shall be the sole responsibility of the Contractor, and Contractor shall correct such encroachments within thirty (30) days of the improvement survey (or as soon thereafter as reasonably possible), at Contractor's sole cost and expense, either by the removal of the encroachment (and subsequent reconstruction on the Project site) or agreement with the adjacent property owner(s) (in form and substance satisfactory to Owner in its sole discretion) allowing the encroachments to remain.

§ 3.3.7 Coordination:

1. *The Lump Sum Single Prime Contractor "The Contractor" is the sole responsible party for the coordination of the entire project.*
2. *The Contractor shall be responsible to coordinate and expedite the total construction process and all of its parts. The Owner relies upon the organization, management, skill, cooperation and efficiency of the Contractor to supervise, direct, control and manage the work and to coordinate and expedite the efforts of the other prime contractors and subcontractors so as to deliver the work conforming to the contract within the scheduled time. The Contractor is responsible for proper sequence and coordination. It shall determine the location of work and resolve conflicts amongst Contractors.*
3. *The Contractor shall provide a qualified full-time staff member or members to manage the project. THIS PROJECT MANAGER shall coordinate, organize and manage the project from the contractor's main office and oversee the shop drawing process signing off for quality assurance and conformance with the Contract Documents on each shop drawing. The project manager shall be subject to the approval of the Owner and Architect who at all times have the right to require the contractor to replace this project manager if they fail to perform.*

   The project manager shall conduct an onsite meeting at least once a week with the construction superintendent and all other prime and/or subcontractors in attendance to coordinate the project and review the schedule. The Architect may attend but is not responsible for organizing or taking minutes. The project manager shall provide a meeting agenda and issue minutes within four (4) working days of each meeting.
4. *The Contractor shall provide a qualified full-time staff member or members to manage the project on site. THIS CONSTRUCTION SUPERINTENDENT shall coordinate, organize and manage the project from the on site and oversee their own work and the work of their sub-contractors. Should the contractor be responsible for multiple projects at different sites, or multiple locations on one large site, then the contractor shall provide a separate qualified superintendent for each of the projects or locations. This determination shall be made by and subject to the approval of the Owner and Architect who at all times may require additional manpower. The superintendent shall be responsible for onsite safety, quality assurance, conformance with the Contract Documents and perform coordination with all on site construction personnel and/or subcontractors. The construction superintendent shall be subject to the approval of the Owner and Architect who at all times have the right to require the contractor to replace this construction superintendent if they fail to perform.*
5. *The subcontractors shall also have a designated superintendent and/or foreman who will at all times be subject to the approval of the Owner and Architect. The Owner and Architect reserves the right to require the contractor to replace the superintendent and/or foreman if, in the opinion of the Owner and Architect, the superintendent and/or foreman is not performing satisfactorily.*
6. *Each subcontractor shall coordinate his activities with the activities of other contractors.*
7. *All questions pertaining to the work are to be made to the A/E sufficiently in (via an RFI Form) advance of construction to permit comparisons investigation or references to drawings and shop drawings as necessary.*
8. *The Contractor is required to submit a site logistics plan coordinating all Owner functions with the access and safety of the job site.*

AIA Document A201™ – 2017. Copyright © 1911, 1915, 1918, 1925, 1937, 1951, 1958, 1961, 1963, 1966, 1970, 1976, 1987, 1997, 2007 and 2017 by The American Institute of Architects. **All rights reserved. WARNING: This AIA® Document is protected by U.S. Copyright Law and International Treaties. Unauthorized reproduction or distribution of this AIA® Document, or any portion of it, may result in severe civil and criminal penalties, and will be prosecuted to the maximum extent possible under the law.** This draft was produced by AIA software at 09:54:27 on 07/24/2018 under Order No.9799823797 which expires on 01/19/2019, and is not for resale.
User Notes: (913728330)

9. ***The Contractor is required to coordinate all the inspection and material testing to meet the contract documents specifications.***
10. ***The Contractor has full and sole responsibility for construction methods and implementation of a "quality control system" to insure coordination.***
11. ***The Contractor is responsible for field verification of all dimensions/measurements for the coordination of materials and trades. Check field dimensions, clearances, relationships to available space, and anchors.***
12. ***The Contractor shall make all necessary arrangements to conduct work so that all parts shall be carried on harmoniously and simultaneously or sequentially, so as components or increments of the same shall not interfere or retard the progress of others.***
13. ***Minor changes in locations of equipment, parts, etc. due to field conditions shall be made, if so directed, at no additional cost.***
14. ***The Contractor shall coordinate the delivery, unloading, movement, relocation, storage and protection of all materials.***
15. ***The Contractor shall examine the drawings and dimensions and is responsible for satisfactory joining and fitting of all parts of the work.***
16. ***Accurate dimensions, sleeved and opening drawings are to be submitted prior to placement in the field.***
17. ***The Contractor is responsible for any omissions of the subcontractors and is required to provide a complete operating facility.***
18. ***The Architect /Engineer and Owner shall assist in resolution of any coordination items.***

§ 3.4 Labor and Materials

§ 3.4.1 Unless otherwise provided in the Contract Documents, the Contractor shall provide and pay for labor, materials, equipment, tools, construction equipment and machinery, water, heat, utilities, transportation, and other facilities and services necessary for proper execution and completion of the Work, whether temporary or permanent and whether or not incorporated or to be incorporated in the Work.

§ 3.4.2 Except in the case of minor changes in the Work approved by the Architect in accordance with Section 3.12.8 or ordered by the Architect in accordance with Section 7.4, the Contractor may make substitutions only with the consent of the Owner, after evaluation by the Architect and in accordance with a Change Order or Construction Change Directive ***and the provisions of Section 01300 of the Contract Specifications***.

§ 3.4.2.1 STANDARD OF QUALITY: The various materials and products specified in the specifications by name or description are given to establish a standard of quality and of cost for bid purposes.

.1 It is not the intent to limit the Contractor to any one material or product specified but rather to described as the minimum standard.

.2 When proprietary names are used as the "Basis of Design", for specified products or equipment, they shall be followed by the words "or approved equal in quality necessary to meet the specifications," unless otherwise indicated elsewhere in the Contact Documents.

§ 3.4.2.2 The Architect will evaluate alternatives and substitutions and shall be the sole judge of whether the alternatives, (substitutions), are acceptable or not.

.1 The burden of proving the alternatives, (substitutions), are equal, or better, to the specified product is that of the Contractor.

.2 Contractor shall submit request for substitution in accordance with substitution procedures indicated elsewhere in the Contract Documents.

.3 Any alternative names or products which do not meet the specifications will not be accepted.

§ 3.4.3 The Contractor shall enforce strict discipline and good order among the Contractor's employees and other persons carrying out the Work. The Contractor shall not permit employment of unfit persons or persons not properly skilled in tasks assigned to them.

§ 3.4.4 The Contractor must provide suitable storage facilities at the site for the proper protection and safe storage of his materials. Such storage facilities must be approved in advance in writing by the Architect.

AIA Document A201™ – 2017. Copyright © 1911, 1915, 1918, 1925, 1937, 1951, 1958, 1961, 1963, 1966, 1970, 1976, 1987, 1997, 2007 and 2017 by The American Institute of Architects. **All rights reserved. WARNING: This AIA® Document is protected by U.S. Copyright Law and International Treaties. Unauthorized reproduction or distribution of this AIA® Document, or any portion of it, may result in severe civil and criminal penalties, and will be prosecuted to the maximum extent possible under the law.** This draft was produced by AIA software at 09:54:27 on 07/24/2018 under Order No.9799823797 which expires on 01/19/2019, and is not for resale.
User Notes: (913728330)

§ 3.4.5 All materials delivered to the premises which are to form a part of the work are to be considered the property of the Owner and must not be removed without the Architect's consent; but the Contractor shall remove all surplus materials upon completion of each phase of the work and as directed by the Architect.

§ 3.4.6 When any room is used as a shop, storeroom, etc., during the progress of the work, the Contractor making use of the space will be responsible for any repairs, patching, or cleaning arising from such use. Prior approval of Architect for use of such areas is mandatory.

§ 3.4.7 Not later than seven (7) days from the Notice to Proceed, the Contractor shall provide a list showing the name of the manufacturer proposed to be used for each of the products identified in the Specifications Divisions 1-16, and if applicable, the installing Subcontractor's name.

§ 3.4.8 The Contractor will be held to be to be thoroughly familiar with all conditions affecting labor in the locale of the Project, including, but not limited to, trade jurisdictions and agreements, incentive and premium time, pay, procurement, living and commuting conditions. Contractor shall assume responsibility for costs resulting from his failure to verify conditions affecting his labor.

§ 3.4.9 Contractor shall be responsible for labor peace on the Project and shall at all times make its best efforts and judgment as an experienced contractor to adopt and implement policies and practices designed to avoid work stoppages, slowdowns, disputes, or strikes where reasonably possible and practical under the circumstances, and shall at all times maintain Project-wide labor harmony. Except as specifically provided in Subparagraph 8.3.1, Contractor shall be liable to Owner for all damages suffered by Owner occurring as a result of work stoppages, slowdowns, disputes, or strikes.

§ 3.5 Warranty

§ 3.5.1 The Contractor warrants to the Owner and Architect that materials and equipment furnished under the Contract will be of good quality and new unless the Contract Documents require or permit otherwise. The Contractor further warrants that the Work will conform to the requirements of the Contract Documents and will be free from defects, except for those inherent in the quality of the Work the Contract Documents require or permit. Work, materials, or equipment not conforming to these requirements may be considered defective. The Contractor's warranty excludes remedy for damage or defect caused by abuse, alterations to the Work not executed by the Contractor, improper or insufficient maintenance, improper operation, or normal wear and tear and normal usage. If required by the Architect, the Contractor shall furnish satisfactory evidence as to the kind and quality of materials and equipment.

§ 3.5.2 All material, equipment, or other special warranties required by the Contract Documents shall be issued in the name of the Owner, or shall be transferable to the Owner, and shall commence in accordance with Section 9.8.4.

§ 3.5.2 The Contractor represents that all manufacturer and supplier warranties shall run directly to or be specifically assignable to the Owner. The Contractor warrants that all portions of the work that will be covered by a manufacturer's or supplier's warranty shall be performed in such a manner so as to preserve all rights under such warranties. The Contractor hereby assigns to the Owner effective upon the termination of this contract all manufacturer's and supplier's warranties relating to the Work, and the Contractor shall upon request of the Owner, execute any document reasonably requested by Owner to effectuate such assignment. If the Owner attempts to enforce a claim based upon a manufacturer's or suppliers warranty and such manufacturer or supplier refuses to honor such warranty based in whole or in part on a claim of defective installation by the Contractor, the Contractor shall be responsible for any resulting loss or damages incurred by the Owner as a result of the manufacturer's or supplier's refusal to honor such warranty. The Contractor's obligations under this Subparagraph 3.5.2 shall survive the expiration or earlier termination of the Contract. The warranty period for all work of each Contractor shall be two (2) years from the date of final inspection and acceptance by the Owner unless otherwise specified.

§ 3.6 Taxes

The Contractor shall pay sales, consumer, use and similar taxes for the Work provided by the Contractor that are legally enacted when bids are received or negotiations concluded, whether or not yet effective or merely scheduled to go into effect.

AIA Document A201™ – 2017. Copyright © 1911, 1915, 1918, 1925, 1937, 1951, 1958, 1961, 1963, 1966, 1970, 1976, 1987, 1997, 2007 and 2017 by The American Institute of Architects. **All rights reserved. WARNING: This AIA® Document is protected by U.S. Copyright Law and International Treaties. Unauthorized reproduction or distribution of this AIA® Document, or any portion of it, may result in severe civil and criminal penalties, and will be prosecuted to the maximum extent possible under the law.** This draft was produced by AIA software at 09:54:27 on 07/24/2018 under Order No.9799823797 which expires on 01/19/2019, and is not for resale.
User Notes: (913728330)

§ 3.6.1 The owner is exempt from all taxes including Federal Excise Tax, fuel tax, transportation taxes and State Sales or Use Tax.

§ 3.7 Permits, Fees, Notices and Compliance with Laws

§ 3.7.1 ~~Unless otherwise provided in the Contract Documents, the Contractor shall secure and pay for the building permit as well as for other permits, fees, licenses, and inspections by government agencies necessary for proper execution and completion of the Work that are customarily secured after execution of the Contract and legally required at the time bids are received or negotiations concluded~~. ***The Contractor shall be required to secure permits or government approvals necessary for the proper execution and completion of the work. The Contractor shall obtain business licenses required by the State, County and/or City/Township and shall give all notices and comply with all laws, ordinances, rules, regulations and orders of any public authority bearing on the performance of the work.***

.1 It shall be the obligation of the Contractor to review the Contract Documents and to determine and to notify the Owner and Architect of any discrepancy between building codes and regulations of which the Contractor has knowledge or should be reasonably able to determine.

.2 The Contractor shall not violate any zoning, setback or other requirements of applicable laws, codes and ordinances, building codes, rules or regulations, the Contractor promptly shall notify the Architect, in writing, and necessary changes shall be accomplished by appropriate Modification.

3.7.1.1 The required Building Permit or Permits shall be secured by the Contractor for his trade; or by the Prime Contractor in charge of the Work when the Contract combines more than one trade under a Single Contract.

§ 3.7.2 The Contractor shall comply with and give notices required by applicable laws, statutes, ordinances, codes, rules and regulations, and lawful orders of public authorities applicable to performance of the Work.

§ 3.7.3 If the Contractor performs Work knowing it to be contrary to applicable laws, statutes, ordinances, codes, rules and regulations, or lawful orders of public authorities, the Contractor shall assume appropriate responsibility for such Work and shall bear ~~the costs attributable to correction~~. ***all costs attributable to the correction thereof or related thereto, including all fines and penalties***.

§ 3.7.4 Concealed or Unknown Conditions

If the Contractor encounters conditions at the site that are (1) subsurface or otherwise concealed physical conditions that differ materially from those indicated in the Contract Documents or (2) unknown physical conditions of an unusual nature that differ materially from those ordinarily found to exist and generally recognized as inherent in construction activities of the character provided for in the Contract Documents, the Contractor shall promptly provide notice to the Owner and the Architect before conditions are disturbed and in no event later than ~~14 days~~ ***three (3) days*** after first observance of the conditions. The Architect will promptly investigate such conditions and, if the Architect determines that they differ materially and cause an increase or decrease in the Contractor's cost of, or time required for, performance of any part of the Work, will recommend that an equitable adjustment be made in the Contract Sum or Contract Time, or both. If the Architect determines that the conditions at the site are not materially different from those indicated in the Contract Documents and that no change in the terms of the Contract is justified, the Architect shall promptly notify the Owner and Contractor, stating the reasons. If either party disputes the Architect's determination or recommendation, that party may submit a Claim as provided in Article 15.

§ 3.7.5 If, in the course of the Work, the Contractor encounters human remains or recognizes the existence of burial markers, archaeological sites or wetlands not indicated in the Contract Documents, the Contractor shall immediately suspend any operations that would affect them and shall notify the Owner and Architect. ~~Upon receipt of such notice, the Owner shall promptly take any action necessary to obtain governmental authorization required to resume the operations.~~ The Contractor shall continue to suspend such operations until otherwise instructed by the Owner but shall continue with all other operations that do not affect those remains or features. Requests for adjustments in the Contract Sum and Contract Time arising from the existence of such remains or features may be made as provided in Article 15.

§ 3.8 Allowances (See Specification "Section 012100 – Allowances")

§ 3.8.1 The Contractor shall include in the Contract Sum all allowances stated in the Contract Documents. Items covered by allowances shall be supplied for such amounts and by such persons or entities as the Owner may direct,

AIA Document A201™ – 2017. Copyright © 1911, 1915, 1918, 1925, 1937, 1951, 1958, 1961, 1963, 1966, 1970, 1976, 1987, 1997, 2007 and 2017 by The American Institute of Architects. **All rights reserved. WARNING: This AIA® Document is protected by U.S. Copyright Law and International Treaties. Unauthorized reproduction or distribution of this AIA® Document, or any portion of it, may result in severe civil and criminal penalties, and will be prosecuted to the maximum extent possible under the law.** This draft was produced by AIA software at 09:54:27 on 07/24/2018 under Order No.9799823797 which expires on 01/19/2019, and is not for resale.
User Notes: (913728330)

but the Contractor shall not be required to employ persons or entities to whom the Contractor has reasonable objection.

§ 3.8.2 Unless otherwise provided in the Contract Documents,

- **.1** allowances shall cover the cost to the Contractor of materials and equipment delivered at the site and all required taxes, less applicable trade discounts;
- **.2** ~~Contractor's costs for unloading and handling at the site, labor, installation costs, overhead, profit, and other expenses contemplated for stated allowance amounts shall be included in the Contract Sum but not in the allowances; and~~
- **.3** whenever costs are more than or less than allowances, the Contract Sum shall be adjusted accordingly by Change Order. The amount of the Change Order shall reflect (1) the difference between actual costs and the allowances under Section 3.8.2.1 ~~and (2) changes in Contractor's costs under Section 3.8.2.2~~.

§ 3.8.3 Materials and equipment under an allowance shall be selected by the Owner with reasonable promptness.

§ 3.9 Superintendent

§ 3.9.1 The Contractor shall employ a ***full time*** competent superintendent and necessary assistants ***acceptable to the Owner and Architect*** who shall be in attendance at the Project site during performance of the Work. The superintendent shall represent the Contractor, and communications given to the superintendent shall be as binding as if given to the Contractor.

§ 3.9.2 The Contractor, as soon as practicable after award of the Contract, shall notify the Owner and Architect of the name and qualifications of a proposed superintendent. Within 14 days of receipt of the information, the Architect may notify the Contractor, stating whether the Owner or the Architect (1) has reasonable objection to the proposed superintendent or (2) requires additional time for review. Failure of the Architect to provide notice within the 14-day period shall constitute notice of no reasonable objection.

§ 3.9.3 The Contractor shall not employ a proposed superintendent to whom the Owner or Architect has made reasonable and timely objection. The Contractor shall not change the superintendent without the Owner's consent, which shall not unreasonably be withheld or delayed.

§ 3.9.4 A superintendent for the contractor shall be required for the overall project and a Foreman shall be at the project site. The number of necessary Assistants to the superintendent shall be the areas where work is in progress shall be adequately supervised by the Contractor's superintendent or one of his assistants. If, in the Architect or Engineer's opinion, the quality or progress of the work are adversely affected by lack of adequate supervision, the Contractor shall be required to increase the number of supervisory personnel at no increase in the Contract sum.

§ 3.10 Contractor's Construction and Submittal Schedules (*See Specification Section 013100, "Contractor's Construction Schedules.")*

§ 3.10.1 The Contractor, promptly after being awarded the Contract, shall submit for the Owner's and Architect's information a Contractor's construction schedule for the Work. The schedule shall contain detail appropriate for the Project, including (1) the date of commencement of the Work, interim schedule milestone dates, and the date of Substantial Completion; (2) an apportionment of the Work by construction activity; and (3) the time required for completion of each portion of the Work. The schedule shall provide for the orderly progression of the Work to completion and shall not exceed time limits current under the Contract Documents. The schedule shall be revised at appropriate intervals as required by the conditions of the Work and Project. ***The schedule which is prepared by the Contractor shall indicate the proposed starting and completion date for the various subdivisions of the Work as well as the totality of the Work. The schedule shall be updated every thirty (30) days and must be submitted to the Architect with Contractor's Applications for Payment. If the schedule is not submitted with the payment application, no payment will be processed. Each schedule shall contain a comparison of actual progress with the estimated progress for such point in time started in the original schedule. If any schedule submitted sets forth a date for Substantial Completion for the Work or any phase of the Work beyond the Date(s) of Substantial Completion established in the Contract (as the same may be extended as provided in the Contract Documents), then Contractor shall submit to Architect and Owner for their review and approval a description of the means and methods which Contractor intends to employ to expedite the progress of the Work to ensure timely***

AIA Document A201™ – 2017. Copyright © 1911, 1915, 1918, 1925, 1937, 1951, 1958, 1961, 1963, 1966, 1970, 1976, 1987, 1997, 2007 and 2017 by The American Institute of Architects. **All rights reserved. WARNING: This AIA® Document is protected by U.S. Copyright Law and International Treaties. Unauthorized reproduction or distribution of this AIA® Document, or any portion of it, may result in severe civil and criminal penalties, and will be prosecuted to the maximum extent possible under the law.** This draft was produced by AIA software at 09:54:27 on 07/24/2018 under Order No.9799823797 which expires on 01/19/2019, and is not for resale.
User Notes: (913728330)

completion of the various phases of the Work as well as the totality of the Work. To ensure such timely completion, Contractor shall take all necessary action including, without limitation, increasing the number of personnel and labor on the Project and implementing overtime and double shifts. In that event, Contractor shall not be entitled to an adjustment in the Contract Sum or the schedule.

§ 3.10.2 The Contractor, promptly after being awarded the Contract and thereafter as necessary to maintain a current submittal schedule, shall submit a submittal schedule for the Architect's approval. The Architect's approval shall not be unreasonably delayed or withheld. The submittal schedule shall (1) be coordinated with the Contractor's construction schedule, and (2) allow the Architect reasonable time to review submittals. If the Contractor fails to submit a submittal schedule, or fails to provide submittals in accordance with the approved submittal schedule, the Contractor shall not be entitled to any increase in Contract Sum or extension of Contract Time based on the time required for review of submittals.

§ 3.10.3 The Contractor shall perform the Work in general accordance with the most recent schedules submitted to the Owner and Architect.

§ 3.10.4 Schedules shall comply with the requirements of the Division 1 "Section 013200 – Construction Progress Documentation."

§ 3.11 Documents and Samples at the Site

The Contractor shall make available, at the Project site, the Contract Documents, including Change Orders, Construction Change Directives, and other Modifications, in good order and marked currently to indicate field changes and selections made during construction, and the approved Shop Drawings, Product Data, Samples, and similar required submittals. These shall be in electronic form or paper copy, available to the Architect and Owner, and delivered to the ~~Architect for submittal to~~ the Owner upon completion of the Work as a record of the Work as constructed. ***See Specification "Section 013300 – Submittal Procedures," and "Section 017700 – Closeout Procedures," for specific details and requirements.***

§ 3.12 Shop Drawings, Product Data and Samples

§ 3.12.1 Shop Drawings are drawings, diagrams, schedules, and other data specially prepared for the Work by the Contractor or a Subcontractor, Sub-subcontractor, manufacturer, supplier, or distributor to illustrate some portion of the Work.

§ 3.12.2 Product Data are illustrations, standard schedules, performance charts, instructions, brochures, diagrams, and other information furnished by the Contractor to illustrate materials or equipment for some portion of the Work.

§ 3.12.3 Samples are physical examples that illustrate materials, equipment, or workmanship, and establish standards by which the Work will be judged.

§ 3.12.4 Shop Drawings, Product Data, Samples, and similar submittals are not Contract Documents. Their purpose is to demonstrate how the Contractor proposes to conform to the information given and the design concept expressed in the Contract Documents for those portions of the Work for which the Contract Documents require submittals. Review by the Architect is subject to the limitations of Section 4.2.7. Informational submittals upon which the Architect is not expected to take responsive action may be so identified in the Contract Documents. Submittals that are not required by the Contract Documents may be returned by the Architect without action.

§ 3.12.5 The Contractor shall review for compliance with the Contract Documents, approve, and submit to the Architect, Shop Drawings, Product Data, Samples, and similar submittals required by the Contract Documents, in accordance with the submittal schedule approved by the Architect or, in the absence of an approved submittal schedule, with reasonable promptness and in such sequence as to cause no delay in the Work or in the activities of the Owner or of Separate Contractors. ***Submittals which are not marked as reviewed for compliance with the Contract Documents and approved by the Contractor may be returned by the Architect without action.***

§ 3.12.6 By submitting Shop Drawings, Product Data, Samples, and similar submittals, the Contractor represents to the Owner and Architect that the Contractor has (1) reviewed and approved them, (2) determined and verified materials, field measurements and field construction criteria related thereto, or will do so, and (3) checked and coordinated the information contained within such submittals with the requirements of the Work and of the Contract Documents.

AIA Document A201™ – 2017. Copyright © 1911, 1915, 1918, 1925, 1937, 1951, 1958, 1961, 1963, 1966, 1970, 1976, 1987, 1997, 2007 and 2017 by The American Institute of Architects. **All rights reserved. WARNING: This AIA® Document is protected by U.S. Copyright Law and International Treaties. Unauthorized reproduction or distribution of this AIA® Document, or any portion of it, may result in severe civil and criminal penalties, and will be prosecuted to the maximum extent possible under the law.** This draft was produced by AIA software at 09:54:27 on 07/24/2018 under Order No.9799823797 which expires on 01/19/2019, and is not for resale.
User Notes: (913728330)

§ 3.12.7 The Contractor shall perform no portion of the Work for which the Contract Documents require submittal and review of Shop Drawings, Product Data, Samples, or similar submittals, until the respective submittal has been approved by the Architect.

§ 3.12.8 The Work shall be in accordance with approved submittals except that the Contractor shall not be relieved of responsibility for deviations from the requirements of the Contract Documents by the Architect's approval of Shop Drawings, Product Data, Samples, or similar submittals, unless the Contractor has specifically notified the Architect of such deviation at the time of submittal and (1) the Architect has given written approval to the specific deviation as a minor change in the Work, or (2) a Change Order or Construction Change Directive has been issued authorizing the deviation. The Contractor shall not be relieved of responsibility for errors or omissions in Shop Drawings, Product Data, Samples, or similar submittals, by the Architect's approval thereof.

§ 3.12.9 The Contractor shall direct specific attention, in writing or on resubmitted Shop Drawings, Product Data, Samples, or similar submittals, to revisions other than those requested by the Architect on previous submittals. In the absence of such notice, the Architect's approval of a resubmission shall not apply to such revisions.

§ 3.12.10 The Contractor shall not be required to provide professional services that constitute the practice of architecture or engineering unless such services are specifically required by the Contract Documents for a portion of the Work or unless the Contractor needs to provide such services in order to carry out the Contractor's responsibilities for construction means, methods, techniques, sequences, and procedures. The Contractor shall not be required to provide professional services in violation of applicable law.

§ 3.12.10.1 If professional design services or certifications by a design professional related to systems, materials, or equipment are specifically required of the Contractor by the Contract Documents, the Owner and the Architect will specify all performance and design criteria that such services must satisfy. The Contractor shall be entitled to rely upon the adequacy and accuracy of the performance and design criteria provided in the Contract Documents. The Contractor shall cause such services or certifications to be provided by an appropriately licensed design professional, whose signature and seal shall appear on all drawings, calculations, specifications, certifications, Shop Drawings, and other submittals prepared by such professional. Shop Drawings, and other submittals related to the Work, designed or certified by such professional, if prepared by others, shall bear such professional's written approval when submitted to the Architect. The Owner and the Architect shall be entitled to rely upon the adequacy and accuracy of the services, certifications, and approvals performed or provided by such design professionals, provided the Owner and Architect have specified to the Contractor the performance and design criteria that such services must satisfy. Pursuant to this Section 3.12.10, the Architect will review and approve or take other appropriate action on submittals only for the limited purpose of checking for conformance with information given and the design concept expressed in the Contract Documents.

§ 3.12.10.2 If the Contract Documents require the Contractor's design professional to certify that the Work has been performed in accordance with the design criteria, the Contractor shall furnish such certifications to the Architect at the time and in the form specified by the Architect.

§ 3.12.11 Detailed requirements are specified in Specification "Section 013300 – Submittal Procedures."

§3.12.12 All shop drawings are to include manufacturer's data. All shop drawings and samples are to be submitted by the Contractor to the Architect for review. Each sheet of the shop drawings shall identify the project, contractor, subcontractor, and fabricator or manufacturer and the date of the drawings. All shop drawings shall be numbered in consecutive sequence and each sheet shall indicate the total number of sheets in the set.

§ 3.12.13 Substitutions: All substitutions or deviations from plans and specification must be clearly noted as such on all shop drawings. Contractor shall identify, coordinate and pay for any additional requirements as a result of substitutions, deviations, etc., including necessary change orders. In addition, substitution submittals shall be made no later than 30 days after Notice to Proceed in order to provide time for comparison review. All submittals after 30 days shall be in strict accordance with the basis of design / specified products.

AIA Document A201™ – 2017. Copyright © 1911, 1915, 1918, 1925, 1937, 1951, 1958, 1961, 1963, 1966, 1970, 1976, 1987, 1997, 2007 and 2017 by The American Institute of Architects. **All rights reserved. WARNING: This AIA® Document is protected by U.S. Copyright Law and International Treaties. Unauthorized reproduction or distribution of this AIA® Document, or any portion of it, may result in severe civil and criminal penalties, and will be prosecuted to the maximum extent possible under the law.** This draft was produced by AIA software at 09:54:27 on 07/24/2018 under Order No.9799823797 which expires on 01/19/2019, and is not for resale.
User Notes: (913728330)

§ 3.13 Use of Site
The Contractor shall confine operations at the site to areas permitted by applicable laws, statutes, ordinances, codes, rules and regulations, lawful orders of public authorities, and the Contract Documents and shall not unreasonably encumber the site with materials or equipment.

§ 3.13.1 Location and weights of all equipment and materials and the Contractor intends to place on the slab shall be submitted to the Architect for review.

§ 3.13.2 Only materials and equipment which are to be used directly in the Work shall be brought to and stored on the Project site by the Contractor. After equipment is no longer required for the Work, it shall be promptly removed from the Project site. Protection of construction materials and equipment stored at the Project site from weather, theft, damage and all other adversity is solely the responsibility of the Contractor.

§ 3.13.3 The Contractor and any entity for whom the Contractor is responsible shall not erect any sign on the Project site without the prior written consent of the Owner.

§ 3.13.4 Contractor shall ensure that the Work, at all times, is performed in a manner that affords reasonable access, both vehicular and pedestrian, to the site of the Work and all adjacent areas. The Work shall be performed, to the fullest extent reasonably possible, in such a manner that public areas adjacent to the site of the Work shall be free from all debris, building materials and equipment likely to cause hazardous conditions. Without limitation of any provision of the Contract Documents, Contractor shall use its best efforts to minimize any interference with the occupancy or beneficial use of (1) any areas and buildings adjacent to the site of the Work or (2) the Building in the event of partial occupancy, as more specifically described in Paragraph 9.9.

§ 3.13.5 Without prior approval of the Owner, the Contractor shall not permit any workers to use any existing facilities at the Project site, including without limitation, lavatories, toilets, entrances and parking areas other than those designated by the Owner. Without limitation of any other provision of the Contract Documents, the Contractor shall use its best efforts to comply with all rules and regulations promulgated by the Owner in connection with the use and occupancy of the Project site and the Building, as amended from time to time. The Contractor shall immediately notify the Owner in writing if during the performance of the Work, the Contractor finds compliance with any portion of such rules and regulations to be impracticable, setting forth the problems of such and suggest alternatives through which the same results can be achieved. The Owner may, in the Owner's sole discretion, adopt such suggestions, develop new alternatives or require compliance with the existing requirement of the rules and regulations. The Contractor shall also comply with all insurance requirements and collective bargaining agreements applicable to use and occupancy of the Project site and the Building.

§3.13.6 The Contractor shall provide a temporary construction fence weather shown on the contract documents or not as required to separate the area or areas under construction from the Owners area or areas used by the public. The temporary fencing shall be approved by the Owner prior to installation.

§ 3.14 Cutting and Patching (See Specification "Section 024119 – Selective Demolition")
§ 3.14.1 The Contractor shall be responsible for cutting, fitting, or patching required to complete the Work or to make its parts fit together properly. All areas requiring cutting, fitting, or patching shall be restored to the condition existing prior to the cutting, fitting, or patching, unless otherwise required by the Contract Documents.

§ 3.14.2 The Contractor shall not damage or endanger a portion of the Work or fully or partially completed construction of the Owner or Separate Contractors by cutting, patching, or otherwise altering such construction, or by excavation. The Contractor shall not cut or otherwise alter construction by the Owner or a Separate Contractor except with written consent of the Owner and of the Separate Contractor. Consent shall not be unreasonably withheld. The Contractor shall not unreasonably withhold, from the Owner or a Separate Contractor, its consent to cutting or otherwise altering the Work.

§ 3.15 Cleaning Up
§ 3.15.1 The Contractor shall keep the premises and surrounding area free from accumulation of waste materials and rubbish caused by operations under the Contract. At completion of the Work, the Contractor shall remove waste materials, rubbish, the Contractor's tools, construction equipment, machinery, and surplus materials from and about the Project.

AIA Document A201™ – 2017. Copyright © 1911, 1915, 1918, 1925, 1937, 1951, 1958, 1961, 1963, 1966, 1970, 1976, 1987, 1997, 2007 and 2017 by The American Institute of Architects. **All rights reserved. WARNING: This AIA® Document is protected by U.S. Copyright Law and International Treaties. Unauthorized reproduction or distribution of this AIA® Document, or any portion of it, may result in severe civil and criminal penalties, and will be prosecuted to the maximum extent possible under the law.** This draft was produced by AIA software at 09:54:27 on 07/24/2018 under Order No.9799823797 which expires on 01/19/2019, and is not for resale.
User Notes: (913728330)

§ 3.15.2 If the Contractor fails to clean up as provided in the Contract Documents, the Owner may do so and the Owner shall be entitled to reimbursement from the Contractor.

§ 3.15.3 The Contractor shall perform all daily clean up and removal of debris from the site including that of his subcontractors. The Contractor shall maintain an adequate supply of laborers to accomplish daily clean up and removal of debris from the site and work areas. No debris will be allowed to accumulate in or around the building including masonry debris. The building site must be maintained free of all litter, dirt, dust and debris on a daily basis. The Owner's Team may stop all work and require all personnel on site to clean up. No accumulation of flammable material is permitted. Prior to installation of finishes the floors will be swept or vacuumed and kept free of dust and dirt until turned over to the Owner.

§ 3.15.4 Cleaning and debris removal may be considered a safety concern by judgment of the Owner or his agents and as such the work may be stopped to provide time and labor for immediate clean up.

§ 3.15.5 Final Clean-Up: The Contractor has the responsibility for the final clean-up and policing of the entire site after other contractors have removed their own waste materials, rubbish, equipment, tools and plant. In addition, thereto, the General Construction Contractor shall have a professional cleaning company perform the following immediately prior to the Architect's inspection for Substantial Completion:

- ***.1 Removal of all manufacturer's temporary labels from materials, equipment and fixtures.***
- ***.2 Removal of all stains from glass and mirrors; wash, polish, inside and outside.***
- ***.3 Removal of marks, stains, finger prints, other soil, dust, dirt, from painted, decorated, or stained woodwork, plaster or plasterboard, metal, acoustic tile, and equipment surfaces.***
- ***.4 Final site clean-up shall extend beyond the Contract Limit Lines as reasonably required to insure the complete removal of all construction debris from the entire site, including staging areas.***

§ 3.16 Access to Work

The Contractor shall provide the Owner and Architect with access to the Work in preparation and progress wherever located.

§ 3.16.1 The Contractor shall promptly notify the Architect/Engineer and Owner of the presence of hazardous conditions at the site, including the start of hazardous operations or the discovery or exposure of hazardous substances.

§ 3.16.2 Contractor shall be responsible for snow plowing and snow removal as required to maintain access/egress to construction area.

§ 3.16.3 Contractor shall keep only necessary equipment on site and shall cooperate with the Owner regarding location of stored material.

§ 3.17 Royalties, Patents and Copyrights

The Contractor shall pay all royalties and license fees. The Contractor shall defend suits or claims for infringement of copyrights and patent rights and shall hold the Owner and Architect harmless from loss on account thereof, but shall not be responsible for defense or loss when a particular design, process, or product of a particular manufacturer or manufacturers is required by the Contract Documents, or where the copyright violations are contained in Drawings, Specifications, or other documents prepared by the Owner or Architect. However, if an infringement of a copyright or patent is discovered by, or made known to, the Contractor, the Contractor shall be responsible for the loss unless the information is promptly furnished to the Architect.

§ 3.18 Indemnification

§ 3.18.1 To the fullest extent permitted by law, the Contractor shall indemnify and hold harmless the Owner, Architect, Architect's consultants, and agents and employees of any of them from and against claims, damages, losses, and expenses, including but not limited to attorneys' fees, arising out of or resulting from performance of the Work, provided that such claim, damage, loss, or expense is attributable to bodily injury, sickness, disease or death, or to injury to or destruction of tangible property (other than the Work itself), but only to the extent caused by the negligent acts or omissions of the Contractor, a Subcontractor, anyone directly or indirectly employed by them, or anyone for whose acts they may be liable, regardless of whether or not such claim, damage, loss, or expense is

AIA Document A201™ – 2017. Copyright © 1911, 1915, 1918, 1925, 1937, 1951, 1958, 1961, 1963, 1966, 1970, 1976, 1987, 1997, 2007 and 2017 by The American Institute of Architects. **All rights reserved. WARNING: This AIA® Document is protected by U.S. Copyright Law and International Treaties. Unauthorized reproduction or distribution of this AIA® Document, or any portion of it, may result in severe civil and criminal penalties, and will be prosecuted to the maximum extent possible under the law.** This draft was produced by AIA software at 09:54:27 on 07/24/2018 under Order No.9799823797 which expires on 01/19/2019, and is not for resale.
User Notes: (913728330)

caused in part by a party indemnified hereunder. Such obligation shall not be construed to negate, abridge, or reduce other rights or obligations of indemnity that would otherwise exist as to a party or person described in this Section 3.18.

§3.18.1.1 Contractor, for itself, its successors and assigns, agrees to indemnify and save Owner, the individual members (past, present and future), its successors, assigns, employees, agent, Architects, Engineers, harmless from, and against any and all claims, demands, damages, actions or causes of action by any party, together with any and all losses, costs or expenses in connection therewith or related thereto, including, but not limited to, attorney fees and costs of suit, for bodily injuries, death or property damage arising in or in any manner growing out of the work performed, or to be performed under this Contract. Contractor and its successors and assigns agree to indemnify the Owner, its individual members (past, present and future), its successors, assigns, employees, agents, Architects, and Engineers against all fines, penalties or losses incurred for, including, but not limited to, attorney fees and costs of suit, or by reason of the violation by Contractor in the performance of this Contract, or any ordinance, regulation, rule of law of any political subdivision or duly constituted public authority. Without limiting the foregoing, the Contractor, at the request of Owner, its individual members (past and present), its successors, assigns, employees, agents, Architects, or Engineers, agrees to defend at the Contractor's expense any suit or proceeding brought against Owner, its individual members (past, present and future), its successors, assigns, employees, agents, Architect, Engineers due to, or arising out of the work performed by the Contractor.

§3.18.1.2 The Contractor assumes the entire risk, responsibility, and liability for any and all damage or injury of every kind and nature whatsoever (including death resulting therefrom) to all persons, whether employees of the Contractor or otherwise, and to all property (including the Work itself) caused by, resulting from, arising out of or occurring in connection with the execution of the Work, or in preparation for the Work, or any extension, modification, or amendment to the Work by the Change Order or otherwise. To the fullest extent permitted by law, the Contractor and its Surety shall indemnify and save harmless the Owner, the Architect, the Architect's consultants, and the respective agents and employees of any of them (herein collectively called the Indemnitees) from and against any and all liability, loss, damages, interest, judgments, and liens growing out of, and any and all costs and expenses (including, but not limited to, counsel fees and disbursements) arising out of, relating to or incurred in connection with the Work including, any and all claims, demands, suits, actions, or proceedings which may be made or brought against any of the Indemnitees for or in relation to any breach of the Contract for Construction or any violation of the laws, statutes, ordinances, rules, regulations, or executive orders relating to or in any way affecting the performance or breach of the Contract for Construction, whether or not such injuries to persons or damages to property are due or claimed to be due, in whole or in part, to any negligence of the Contractor or its employees, agents, subcontractors, or materialmen, excepting only such injuries and/or damages as are the result of the sole gross negligence of the Owner or Architect.

§ 3.18.2 In claims against any person or entity indemnified under this Section 3.18 by an employee of the Contractor, a Subcontractor, anyone directly or indirectly employed by them, or anyone for whose acts they may be liable, the indemnification obligation under Section 3.18.1 shall not be limited by a limitation on amount or type of damages, compensation, or benefits payable by or for the Contractor or a Subcontractor under workers' compensation acts, disability benefit acts, or other employee benefit acts.

§3.19 Re-design

§3.19.1 If the Contractor makes, or causes to be made, due to approval of substitute equipment or otherwise, any substantial change in the form, type, system and details of construction from those shown on the Drawings, he shall pay for all costs arising from such changes. The Contractor shall pay all Legal and Architectural and Engineering fees required to check the adequacy of such changes. Any changes or departures from the construction and details shown shall be made only after written approval from the Architect.

§3.19.2 The Contractor represents and warrants the following to the Owner (in addition to the other representations and warranties contained in the Contract Documents), as an inducement to the Owner to execute the Owner-Contractor Agreement, which representations and warranties shall survive the execution and delivery of the Owner-Contractor Agreement and the final completion of the Work

.1 that he/she is authorized to do business in the State, County, and / or City where construction will take place at the Project and is properly licensed by all necessary governmental and public authorities having jurisdiction over him/her and over the Work and the site of the Project;

AIA Document A201™ – 2017. Copyright © 1911, 1915, 1918, 1925, 1937, 1951, 1958, 1961, 1963, 1966, 1970, 1976, 1987, 1997, 2007 and 2017 by The American Institute of Architects. **All rights reserved. WARNING: This AIA® Document is protected by U.S. Copyright Law and International Treaties. Unauthorized reproduction or distribution of this AIA® Document, or any portion of it, may result in severe civil and criminal penalties, and will be prosecuted to the maximum extent possible under the law.** This draft was produced by AIA software at 09:54:27 on 07/24/2018 under Order No.9799823797 which expires on 01/19/2019, and is not for resale.
User Notes: (913728330)

.2 that he/she is familiar with all Federal, State, Municipal and Department laws, ordinances and regulations, which may in any way affect the work of those employed herein, including but not limited to any special acts relating to the work or to the project of which it is a part;

.3 that such temporary and permanent work required by the Contract Documents as is to be done by him/her, can be satisfactorily constructed and used for the purposes for which it is intended;

.4 that he/she is familiar with local trade jurisdictional practices at the site of the project;

.5 that he/she has carefully examined the plans; the specifications and the site of the work, and that from his own investigations, he/she has satisfied himself/herself as to the nature and location of the work, the character, quality and quantity of the surface and subsurface materials likely to be encountered, the character of equipment and other facilities needed for the performance of the work, and the general local conditions, and all other materials which may in any way affect the work or his/her performance;

.6 that he/she has determined what local ordinances, if any, will affect his work. He/She has checked for any County, City, Borough, or Township rules or regulations applicable to the area in which the Project is being constructed and in addition, for any rules or regulations of other organizations having jurisdiction, such as chambers-of-commerce, planning commission, industries, or utility companies who have jurisdiction over property on which the Work will be performed. Any costs of compliance with local controls are included in the prices bid, even if documents of such local controlling agencies are not listed specifically in the Contract Documents.

ARTICLE 4 ARCHITECT

§ 4.1 General

§ 4.1.1 The Architect is the person or entity retained by the Owner pursuant to Section 2.3.2 and identified as such in the Agreement. ***The term "Architect" means the Architect or the Architect's authorized representative.***

§ 4.1.2 Duties, responsibilities, and limitations of authority of the Architect as set forth in the Contract Documents shall not be restricted, modified, or extended without written consent of the Owner, Contractor, and Architect. Consent shall not be unreasonably withheld.

§ 4.1.3 If the employment of the Architect is terminated, the Owner shall employ a successor architect whose status under the Contract Documents shall be that of the Architect.

§ 4.2 Administration of the Contract

§ 4.2.1 The Architect will provide administration of the Contract as described in the Contract Documents and will be an Owner's representative during construction until the date the Architect issues the final Certificate for Payment. The Architect will have authority to act on behalf of the Owner only to the extent provided in the Contract Documents.

§ 4.2.2 The Architect will visit the site at intervals appropriate to the stage of construction, or as otherwise agreed with the Owner, to become generally familiar with the progress and quality of the portion of the Work completed, and to determine in general if the Work observed is being performed in a manner indicating that the Work, when fully completed, will be in accordance with the Contract Documents. However, the Architect will not be required to make exhaustive or continuous on-site inspections to check the quality or quantity of the Work. The Architect will not have control over, charge of, or responsibility for the construction means, methods, techniques, sequences or procedures, or for the safety precautions and programs in connection with the Work, since these are solely the Contractor's rights and responsibilities under the Contract Documents.

§ 4.2.3 On the basis of the site visits, the Architect will keep the Owner reasonably informed about the progress and quality of the portion of the Work completed, and promptly report to the Owner (1) known deviations from the Contract Documents, (2) known deviations from the most recent construction schedule submitted by the Contractor, and (3) defects and deficiencies observed in the Work. The Architect will not be responsible for the Contractor's failure to perform the Work in accordance with the requirements of the Contract Documents. The Architect will not have control over or charge of, and will not be responsible for acts or omissions of, the Contractor, Subcontractors, or their agents or employees, or any other persons or entities performing portions of the Work.

AIA Document A201™ – 2017. Copyright © 1911, 1915, 1918, 1925, 1937, 1951, 1958, 1961, 1963, 1966, 1970, 1976, 1987, 1997, 2007 and 2017 by The American Institute of Architects. **All rights reserved. WARNING: This AIA® Document is protected by U.S. Copyright Law and International Treaties. Unauthorized reproduction or distribution of this AIA® Document, or any portion of it, may result in severe civil and criminal penalties, and will be prosecuted to the maximum extent possible under the law.** This draft was produced by AIA software at 09:54:27 on 07/24/2018 under Order No.9799823797 which expires on 01/19/2019, and is not for resale.
User Notes: (913728330)

§ 4.2.4 Communications
The Owner and Contractor shall include the Architect in all communications that relate to or affect the Architect's services or professional responsibilities. The Owner shall promptly notify the Architect of the substance of any direct communications between the Owner and the Contractor otherwise relating to the Project. Communications by and with the Architect's consultants shall be through the Architect. Communications by and with Subcontractors and suppliers shall be through the Contractor. Communications by and with Separate Contractors shall be through the Owner ***and the Architect***. The Contract Documents may specify other communication protocols.

§ 4.2.5 Based on the Architect's evaluations of the Contractor's Applications for Payment, the Architect will review and certify the amounts due the Contractor and will issue Certificates for Payment in such amounts.

§ 4.2.6 The Architect has authority to reject Work that does not conform to the Contract Documents. Whenever the Architect considers it necessary or advisable, the Architect will have authority to require inspection or testing of the Work in accordance with Sections ***13.4.1,*** 13.4.2 and 13.4.3, whether or not the Work is fabricated, installed or completed. However, neither this authority of the Architect nor a decision made in good faith either to exercise or not to exercise such authority shall give rise to a duty or responsibility of the Architect to the Contractor, Subcontractors, suppliers, their agents or employees, or other persons or entities performing portions of the Work.

§ 4.2.7 The Architect will review and approve, or take other appropriate action upon, the Contractor's submittals such as Shop Drawings, Product Data, and Samples, but only for the limited purpose of checking for conformance with information given and the design concept expressed in the Contract Documents. The Architect's action will be taken in accordance with the submittal schedule approved by the Architect or, in the absence of an approved submittal schedule, with reasonable promptness while allowing sufficient time in the Architect's professional judgment to permit adequate review. Review of such submittals is not conducted for the purpose of determining the accuracy and completeness of other details such as dimensions and quantities, or for substantiating instructions for installation or performance of equipment or systems, all of which remain the responsibility of the Contractor as required by the Contract Documents. The Architect's review of the Contractor's submittals shall not relieve the Contractor of the obligations under Sections 3.3, 3.5, and 3.12. The Architect's review shall not constitute approval of safety precautions or of any construction means, methods, techniques, sequences, or procedures. The Architect's approval of a specific item shall not indicate approval of an assembly of which the item is a component.

§ 4.2.8 The Architect will prepare Change Orders and Construction Change Directives and may order minor changes in the Work as provided in Section 7.4. The Architect will investigate and make determinations and recommendations regarding concealed and unknown conditions as provided in Section 3.7.4.

§ 4.2.9 The Architect will conduct inspections to determine the date or dates of Substantial Completion and the date of final completion; issue Certificates of Substantial Completion pursuant to Section 9.8; receive and forward to the Owner, for the Owner's review and records, written warranties and related documents required by the Contract and assembled by the Contractor pursuant to Section 9.10; and issue a final Certificate for Payment pursuant to Section 9.10.

~~**§ 4.2.10** If the Owner and Architect agree, the Architect will provide one or more Project representatives to assist in carrying out the Architect's responsibilities at the site. The Owner shall notify the Contractor of any change in the duties, responsibilities and limitations of authority of the Project representatives.~~

§ 4.2.11 The Architect will interpret and decide matters concerning ***The Contractors*** performance under, and requirements of, the Contract Documents on written request of either the Owner or Contractor. The Architect's response to such requests will be made in writing within any time limits agreed upon or otherwise with reasonable promptness.

§ 4.2.12 Interpretations and decisions of the Architect will be consistent with the ***language and*** intent of, and reasonably inferable from, the Contract Documents and will be in writing or in the form of drawings. ~~When making such interpretations and decisions, the Architect will endeavor to secure faithful performance by both Owner and Contractor, will not show partiality to either, and will not be liable for results of interpretations or decisions rendered in good faith~~.

§ 4.2.13 The Architect's decisions on matters relating to aesthetic effect will be final if consistent with the intent expressed in the Contract Documents.

AIA Document A201™ – 2017. Copyright © 1911, 1915, 1918, 1925, 1937, 1951, 1958, 1961, 1963, 1966, 1970, 1976, 1987, 1997, 2007 and 2017 by The American Institute of Architects. **All rights reserved. WARNING: This AIA® Document is protected by U.S. Copyright Law and International Treaties. Unauthorized reproduction or distribution of this AIA® Document, or any portion of it, may result in severe civil and criminal penalties, and will be prosecuted to the maximum extent possible under the law.** This draft was produced by AIA software at 09:54:27 on 07/24/2018 under Order No.9799823797 which expires on 01/19/2019, and is not for resale.
User Notes: (913728330)

§ 4.2.14 The Architect will review and respond to requests for information about the Contract Documents. The Architect's response to such requests will be made in writing within any time limits agreed upon or otherwise with reasonable promptness. If appropriate, the Architect will prepare and issue supplemental Drawings and Specifications in response to the requests for information.

§4.2.15 Reference in the technical provisions of the specifications to standard specifications and test methods, including those of the American Society for Testing and Materials, the American Iron and Steel Institute, the American National Standards Institute, the American Society of Mechanical Engineers, the American Society of Heating, Refrigeration and Air Conditioning Engineers, the Factory Mutual System, the National Fire Protection Association, Federal Specifications, and other similar nationally recognized technical societies and agencies shall refer to the editions and revisions current with the date of the Contract Documents.

§4.2.16 The Architect's decision with respect to proposed substitutions of material or equipment specified by trade name shall be final. The Architect reserves the right to waive specifications and to accept a proposed substitution which in his opinion is superior to the material or product specified, or to limit the specification to the product specified.

§4.2.17 Approval of substitutions shall not relieve the Contractor of responsibility for adequate fulfillment of all the various parts of the work, nor from specified guarantees and maintenance. Modification of adjacent or connecting work required due to any substitution approval shall be provided as part of the substitution.

§4.2.18 Insofar as practicable, except as otherwise specified or shown, the material or product of one manufacturer shall be used throughout the work for each specified purpose.

§4.2.19 Manufactured articles, materials and equipment shall be applied, installed, connected, erected, used, cleaned and conditioned in strict accordance with the manufacturer's directions. Should such directions conflict with the Specifications, the Contractor shall request clarification from the Architect before proceeding.

ARTICLE 5 SUBCONTRACTORS

§ 5.1 Definitions

§ 5.1.1 A Subcontractor is a person or entity who has a direct contract with the Contractor to perform a portion of the Work at the site. The term "Subcontractor" is referred to throughout the Contract Documents as if singular in number and means a Subcontractor or an authorized representative of the Subcontractor. The term "Subcontractor" does not include a Separate Contractor or the subcontractors of a Separate Contractor.

§ 5.1.2 A Sub-subcontractor is a person or entity who has a direct or indirect contract with a Subcontractor to perform a portion of the Work at the site. The term "Sub-subcontractor" is referred to throughout the Contract Documents as if singular in number and means a Sub-subcontractor or an authorized representative of the Sub-subcontractor.

§ 5.2 Award of Subcontracts and Other Contracts for Portions of the Work

§ 5.2.1 ~~Unless otherwise stated in the Contract Documents, the Contractor, as soon as practicable after award of the Contract, shall notify the Owner and Architect of the persons or entities proposed for each principal portion of the Work, including those who are to furnish materials or equipment fabricated to a special design. Within 14 days of receipt of the information, the Architect may notify the Contractor whether the Owner or the Architect (1) has reasonable objection to any such proposed person or entity or (2) requires additional time for review. Failure of the Architect to provide notice within the 14-day period shall constitute notice of no reasonable objection.~~ ***Identification of Subcontractors required by N.J.S.A. 18A:18A-18 shall be provided with the bid specifications in accordance with that statute. The names of all subcontractors and material suppliers not covered by N.J.S.A. 18A:18A-18 shall be submitted to the Architect for approval not later than seven (7) days after the date of the notice to proceed. The list of proposed subcontractors shall include a description of the materials and equipment each proposes to furnish and install in the work. The description shall be in sufficient detail to allow the Architect to determine general conformance to Contract requirements. Approval of the submittals required under the Article shall not relieve the Contractor from conformance to the Contract Requirements***

AIA Document A201™ – 2017. Copyright © 1911, 1915, 1918, 1925, 1937, 1951, 1958, 1961, 1963, 1966, 1970, 1976, 1987, 1997, 2007 and 2017 by The American Institute of Architects. **All rights reserved. WARNING: This AIA® Document is protected by U.S. Copyright Law and International Treaties. Unauthorized reproduction or distribution of this AIA® Document, or any portion of it, may result in severe civil and criminal penalties, and will be prosecuted to the maximum extent possible under the law.** This draft was produced by AIA software at 09:54:27 on 07/24/2018 under Order No.9799823797 which expires on 01/19/2019, and is not for resale.
User Notes: (913728330)

§ 5.2.2 The Contractor shall not contract with a proposed person or entity to whom the Owner or Architect has made reasonable and timely objection. The Contractor shall not be required to contract with anyone to whom the Contractor has made reasonable objection.

5.2.2.1 The Architect will promptly reply in writing to the Contractor stating whether the Owner or Architect, after due investigation, has reasonable objection to any such proposal. If adequate data on any proposed manufacturer or installer is not available. the Architect may state that action will be deferred until the Contractor provides further data. Failure of the Owner or Architect to reply promptly shall not constitute a waiver of any of the requirements of the Contract Documents, and all products furnished by the listed manufacturer must conform to such requirements.

~~**§ 5.2.3** If the Owner or Architect has reasonable objection to a person or entity proposed by the Contractor, the Contractor shall propose another to whom the Owner or Architect has no reasonable objection. If the proposed but rejected Subcontractor was reasonably capable of performing the Work, the Contract Sum and Contract Time shall be increased or decreased by the difference, if any, occasioned by such change, and an appropriate Change Order shall be issued before commencement of the substitute Subcontractor's Work. However, no increase in the Contract Sum or Contract Time shall be allowed for such change unless the Contractor has acted promptly and responsively in submitting names as required.~~

§ 5.2.4 The Contractor shall not substitute a Subcontractor, person, or entity for one previously selected if the Owner or Architect makes reasonable objection to such substitution.

§ 5.3 Subcontractual Relations

By appropriate written agreement, the Contractor shall require each Subcontractor, to the extent of the Work to be performed by the Subcontractor, to be bound to the Contractor by terms of the Contract Documents, and to assume toward the Contractor all the obligations and responsibilities, including the responsibility for safety of the Subcontractor's Work that the Contractor, by these Contract Documents, assumes toward the Owner and Architect. Each subcontract agreement shall preserve and protect the rights of the Owner and Architect under the Contract Documents with respect to the Work to be performed by the Subcontractor so that subcontracting thereof will not prejudice such rights, and shall allow to the Subcontractor, unless specifically provided otherwise in the subcontract agreement, the benefit of all rights, remedies, and redress against the Contractor that the Contractor, by the Contract Documents, has against the Owner. Where appropriate, the Contractor shall require each Subcontractor to enter into similar agreements with Sub-subcontractors. The Contractor shall make available to each proposed Subcontractor, prior to the execution of the subcontract agreement, copies of the Contract Documents to which the Subcontractor will be bound, and, upon written request of the Subcontractor, identify to the Subcontractor terms and conditions of the proposed subcontract agreement that may be at variance with the Contract Documents. Subcontractors will similarly make copies of applicable portions of such documents available to their respective proposed Sub-subcontractors.

§ 5.3.1 The Contractor shall obligate each subcontractor specifically to comply with the New Jersey Plan of Affirmative Action to avoid discriminatory practice in employment.

§ 5.3.2 The Contractor shall obligate each subcontractor to comply with the applicable prevailing wage schedule of the Department of Labor of the State of New Jersey.

§ 5.3.3 The Contractor shall obligate each Sub-Contractor to comply with the Public Works (the Public Works Contractor Registration Act of the State of New Jersey).

~~**§ 5.4 Contingent Assignment of Subcontracts**~~

~~**§ 5.4.1** Each subcontract agreement for a portion of the Work is assigned by the Contractor to the Owner, provided that~~

- ~~**.1** assignment is effective only after termination of the Contract by the Owner for cause pursuant to Section 14.2 and only for those subcontract agreements that the Owner accepts by notifying the Subcontractor and Contractor; and~~
- ~~**.2** assignment is subject to the prior rights of the surety, if any, obligated under bond relating to the Contract.~~

AIA Document A201™ – 2017. Copyright © 1911, 1915, 1918, 1925, 1937, 1951, 1958, 1961, 1963, 1966, 1970, 1976, 1987, 1997, 2007 and 2017 by The American Institute of Architects. **All rights reserved. WARNING: This AIA® Document is protected by U.S. Copyright Law and International Treaties. Unauthorized reproduction or distribution of this AIA® Document, or any portion of it, may result in severe civil and criminal penalties, and will be prosecuted to the maximum extent possible under the law.** This draft was produced by AIA software at 09:54:27 on 07/24/2018 under Order No.9799823797 which expires on 01/19/2019, and is not for resale.
User Notes: (913728330)

~~When the Owner accepts the assignment of a subcontract agreement, the Owner assumes the Contractor's rights and obligations under the subcontract.~~

~~**§ 5.4.2** Upon such assignment, if the Work has been suspended for more than 30 days, the Subcontractor's compensation shall be equitably adjusted for increases in cost resulting from the suspension.~~

~~**§ 5.4.3** Upon assignment to the Owner under this Section 5.4, the Owner may further assign the subcontract to a successor contractor or other entity. If the Owner assigns the subcontract to a successor contractor or other entity, the Owner shall nevertheless remain legally responsible for all of the successor contractor's obligations under the subcontract.~~

ARTICLE 6 CONSTRUCTION BY OWNER OR BY SEPARATE CONTRACTORS

§ 6.1 Owner's Right to Perform Construction and to Award Separate Contracts

§ 6.1.1 The term "Separate Contractor(s)" shall mean other contractors retained by the Owner under separate agreements. The Owner reserves the right to perform construction or operations related to the Project with the Owner's own forces, and with Separate Contractors retained under Conditions of the Contract substantially similar to those of this Contract, including those provisions of the Conditions of the Contract related to insurance.

§ 6.1.2 When separate contracts are awarded for different portions of the Project or other construction or operations on the site, the term "Contractor" in the Contract Documents in each case shall mean the Contractor who executes each separate Owner-Contractor Agreement.

§ 6.1.3 ~~The Owner shall provide for coordination of the activities of the Owner's own forces and of each Separate Contractor with the Work of the Contractor, who shall cooperate with them. The Contractor shall participate with any Separate Contractors and the Owner in reviewing their construction schedules. The Contractor shall make any revisions to its construction schedule deemed necessary after a joint review and mutual agreement. The construction schedules shall then constitute the schedules to be used by the Contractor, Separate Contractors, and the Owner until subsequently revised.~~ ***THE CONTRACTOR SHALL BE RESPONSIBLE TO COORDINATE ALL WORK. All trades have a mutual obligation to coordinate their work with the other trades and cooperate as necessary with the Contractor and the Construction schedule – to complete the work as required by the School District. The Architect will provide assistance to the Contractor for coordination between their work and the Owner . The Contractor is required to have their superintendent or foreman on site at all times when their work or that of their subs is in progress***

§ 6.1.4 Unless otherwise provided in the Contract Documents, when the Owner performs construction or operations related to the Project with the Owner's own forces or with Separate Contractors, the Owner or its Separate Contractors shall have the same obligations and rights that the Contractor has under the Conditions of the Contract, including, without excluding others, those stated in Article 3, this Article 6, and Articles 10, 11, and 12.

§ 6.2 Mutual Responsibility

§ 6.2.1 The Contractor shall afford the Owner and Separate Contractors reasonable opportunity for introduction and storage of their materials and equipment and performance of their activities, and shall connect and coordinate the Contractor's construction and operations with theirs as required by the Contract Documents.

§ 6.2.2 If part of the Contractor's Work depends for proper execution or results upon construction or operations by the Owner or a Separate Contractor, the Contractor shall, prior to proceeding with that portion of the Work, promptly notify the Architect of apparent discrepancies or defects in the construction or operations by the Owner or Separate Contractor that would render it unsuitable for proper execution and results of the Contractor's Work. Failure of the Contractor to notify the Architect of apparent discrepancies or defects prior to proceeding with the Work shall constitute an acknowledgment that the Owner's or Separate Contractor's completed or partially completed construction is fit and proper to receive the Contractor's Work. The Contractor shall not be responsible for discrepancies or defects in the construction or operations by the Owner or Separate Contractor that are not apparent. ***Should the Contractor be damaged by any other separate Contractor on the work by reason of such other Contractor's failure to perform properly his Contract with the Owner, no action will lie against the Owner and the Owner shall have no liability therefore, but the Contractor may assert his claim for damage against such separate Contractor as a third party beneficiary under the Contract between such other Contractor and the Owner***.

AIA Document A201™ – 2017. Copyright © 1911, 1915, 1918, 1925, 1937, 1951, 1958, 1961, 1963, 1966, 1970, 1976, 1987, 1997, 2007 and 2017 by The American Institute of Architects. **All rights reserved. WARNING: This AIA® Document is protected by U.S. Copyright Law and International Treaties. Unauthorized reproduction or distribution of this AIA® Document, or any portion of it, may result in severe civil and criminal penalties, and will be prosecuted to the maximum extent possible under the law.** This draft was produced by AIA software at 09:54:27 on 07/24/2018 under Order No.9799823797 which expires on 01/19/2019, and is not for resale.
User Notes: (913728330)

§ 6.2.3 The Contractor shall reimburse the Owner for costs the Owner incurs that are payable to a Separate Contractor because of the Contractor's delays, improperly timed activities or defective construction. ~~The Owner shall be responsible to the Contractor for costs the Contractor incurs because of a Separate Contractor's delays, improperly timed activities, damage to the Work or defective construction.~~

§ 6.2.4 The Contractor shall promptly remedy damage that the Contractor wrongfully causes to completed or partially completed construction or to property of the Owner or Separate Contractor as provided in Section 10.2.5 ***or to other completed or partially completed construction or property on the site or to property of any adjourning Owner or other party.***

6.2.4.1 Should the Contractor cause damage to the work or property of any separate Contractor on the Project, the Contractor shall, upon due notice, settle with such other Contractor by agreement or Court of Law if he will so settle. If such separate Contractor sues the Owner, or the Architect or initiates a Court of Law proceeding on account of any damage alleged to have been so sustained, the Contractor agrees that he will hold the Owner or Architects harmless against any such suit, and that he will reimburse to the Owner or Architect, as the case may be, the cost of defending such suit, including reasonable attorney's fee and if judgment against Owner or Architect arises therefrom, the Contractor shall pay all judgment cost incurred by the Owner or Architect.

§ 6.2.5 The Owner and each Separate Contractor shall have the same responsibilities for cutting and patching as are described for the Contractor in Section 3.14.

§ 6.3 Owner's Right to Clean Up

If a dispute arises among the Contractor, Separate Contractors, and the Owner as to the responsibility under their respective contracts for maintaining the premises and surrounding area free from waste materials and rubbish, the Owner may clean up and the Architect will allocate the cost among those responsible ***as the Owner determines to be just, based on the recommendation of the Architect***.

ARTICLE 7 CHANGES IN THE WORK

§ 7.1 General

§ 7.1.1 Changes in the Work may be accomplished after execution of the Contract, and without invalidating the Contract, by Change Order, Construction Change Directive or order for a minor change in the Work, subject to the limitations stated in this Article 7 and elsewhere in the Contract Documents.

7.1.1.1 A field directive or field order shall not be recognized as having any impact upon the Contract Sum or the Contract Time and the Contractor shall have no claim therefor unless it shall, prior to complying with same and in no event no later than five (5) working days from the date such direction or order was given, submit to the Owner's Team its change proposal for the Owner's approval.

7.1.1.2 When submitting its change proposal, the Contractor shall include and set forth in clear and precise detail breakdowns of labor and materials for all trades involved and the estimated impact on the construction schedule including a specific number of days for a time extension. If the Change Order Request does not provide an additional time request, the Contractor shall not be entitled to an extension of time. The Contractor shall furnish spread sheets from which the breakdowns were prepared, plus spread sheets if requested of any Subcontractors. The Contractor may not claim additional time at a later date and shall remove any language to that effect from his/her Change Order Request.

§ 7.1.2 A Change Order shall be based upon agreement among the Owner, Contractor, and Architect. A Construction Change Directive requires agreement by the Owner and Architect and may or may not be agreed to by the Contractor. An order for a minor change in the Work may be issued by the Architect alone ***in accordance with Paragraph 7.4***.

§ 7.1.2.1 Neither this Contract nor the Work to be performed hereunder can be changed by oral agreement. No course of conduct or dealings between the parties, nor express or implied acceptance of alterations or additions to the Work and no claims that the Owner has been unjustly enriched by any alteration or addition to the Work, whether there is, in fact, any unjust enrichment to the Work, shall be the basis for any alleged implied agreement by the Owner to the change, any alleged waiver of the Owner's right under this Contract or any increase in any amounts due under the Contract or any or a change in any time period provided for in the Contract Documents.

AIA Document A201™ – 2017. Copyright © 1911, 1915, 1918, 1925, 1937, 1951, 1958, 1961, 1963, 1966, 1970, 1976, 1987, 1997, 2007 and 2017 by The American Institute of Architects. **All rights reserved. WARNING: This AIA® Document is protected by U.S. Copyright Law and International Treaties. Unauthorized reproduction or distribution of this AIA® Document, or any portion of it, may result in severe civil and criminal penalties, and will be prosecuted to the maximum extent possible under the law.** This draft was produced by AIA software at 09:54:27 on 07/24/2018 under Order No.9799823797 which expires on 01/19/2019, and is not for resale.
User Notes: (913728330)

§ 7.1.3 Changes in the Work shall be performed under applicable provisions of the Contract Documents. The Contractor shall proceed promptly with changes in the Work, unless otherwise provided in the Change Order, Construction Change Directive, or order for a minor change in the Work.

§ 7.1.4 A directive or order from the Owner or the Architect, other than a Change Order, a Construction Change Directive or any Order for a minor change pursuant to this Article 7, shall not be recognized as having any impact on the Contract Sum or the Contract Time and the Contractor shall have no claim therefore. If the Contractor believes that a directive or order would require it to perform work not required by the Contract Documents, the Contractor shall so inform the Owner and Architect in writing prior to complying with the same and in no event, any later than five (5) working days from the day such direction or order was given, and shall submit to the Owner and Architect for the Owner's and Architect's approval its change proposal.

§ 7.2 Change Orders

§ 7.2.1 A Change Order is a written instrument prepared by the Architect and signed by the Owner, Contractor, and Architect stating their agreement upon all of the following:

- **.1** The change in the Work;
- **.2** The amount of the adjustment, if any, in the Contract Sum; and
- **.3** The extent of the adjustment, if any, in the Contract Time.

§ 7.2.2 Methods used in determining adjustments to the Contract Sum include those listed in Subparagraph 7.3.4 The total for overhead and profit shall NOT exceed 15%.

§7.2.3 Any change in work authorized in writing by the Owner and Architect that will require a change in the cost of the work, whether an additive or deductive change in cost, shall show a complete cost breakdown of labor, material, appropriate overhead and profit (15% maximum) and contract time.

§7.2.4 When a Change Order involves both additions and deletions in material, the net quantity is to be determined and the 15% overhead and profit is to be applied to the net quantity.

§7.2.5 When any change in the Work, regardless of the reason therefore, requires or is alleged to require an adjustment in Contract Time, such request for time adjustment shall be submitted by the Contractor as part of the change proposal. Any Change Order approved by the Owner and for which payment is accepted by the Contractor, in which no adjustment in Contract Time is stipulated, shall be understood to mean that no such adjustment is required by reason of the change, and any and all rights of the Contractor or any subsequent request for adjustment of Contract Time by reason of the change is waived.

§7.2.6 Request by the Contractor for adjustment of the Contract Amount regardless of the reason therefore, shall be submitted to the Architect and the Owner with itemized labor and material quantities and unit prices to permit proper evaluation of the request. A submission by the Contractor containing unsubstantiated lump sum requests for adjustment of the Contract Amount will not be considered by the Owner and Architect. The Owner and Architect will not be liable for any delay incurred by reason of the Contractor's failure to submit satisfactory justification and back-up with any request for adjustment to the Contract Amount.

§7.2.7 Agreement on any Change Order shall constitute a final settlement of all matters relating to the change in the initial Work which is the subject to the Change Order, including, but not limited to, all direct, indirect and impact costs associated with such change and any and all adjustment to the Contract Sum and the Construction Schedule. The Contractor will not be entitled to any compensation for additional work, impact costs or delays in the Construction Schedule not included in the Change Order.

§ 7.2.8 No additional time will be granted to the Contractor for minor change orders unless each individual change order totals more than $100,000.

§7.2.9 Agreement on any Change Order shall constitute a final settlement of all matters relating to the change in the initial Work which is the subject to the Change Order, including, but not limited to, all direct, indirect and impact costs associated with such change and any and all adjustment to the Contract Sum and the Construction Schedule. The Contractor will not be entitled to any compensation for additional work, impact costs or delays in the Construction Schedule not included in the Change Order.

AIA Document A201™ – 2017. Copyright © 1911, 1915, 1918, 1925, 1937, 1951, 1958, 1961, 1963, 1966, 1970, 1976, 1987, 1997, 2007 and 2017 by The American Institute of Architects. **All rights reserved. WARNING: This AIA® Document is protected by U.S. Copyright Law and International Treaties. Unauthorized reproduction or distribution of this AIA® Document, or any portion of it, may result in severe civil and criminal penalties, and will be prosecuted to the maximum extent possible under the law.** This draft was produced by AIA software at 09:54:27 on 07/24/2018 under Order No.9799823797 which expires on 01/19/2019, and is not for resale.
User Notes: (913728330)

§ 7.3 Construction Change Directives

§ 7.3.1 A Construction Change Directive is a written order prepared by the Architect and signed by the Owner and Architect, directing a change in the Work prior to agreement on adjustment, if any, in the Contract Sum or Contract Time, or both. The Owner may by Construction Change Directive, without invalidating the Contract, order changes in the Work within the general scope of the Contract consisting of additions, deletions, or other revisions, the Contract Sum and Contract Time being adjusted accordingly.

§ 7.3.2 A Construction Change Directive shall be used in the absence of total agreement on the terms of a Change Order.

§ 7.3.3 If the Construction Change Directive provides for an adjustment to the Contract Sum, the adjustment shall be based on one of the following methods:

- **.1** Mutual acceptance of a lump sum properly itemized and supported by sufficient substantiating data to permit evaluation;
- **.2** Unit prices stated in the Contract Documents or subsequently agreed upon;
- **.3** Cost to be determined in a manner agreed upon by the parties and a mutually acceptable fixed or percentage fee; or
- **.4** As provided in Section 7.3.4

§ 7.3.4 If the Contractor does not respond promptly or disagrees with the method for adjustment in the Contract Sum, the Architect shall determine the adjustment on the basis of reasonable expenditures and savings of those performing the Work attributable to the change, including, in case of an increase in the Contract Sum, an amount for overhead and profit as set forth in the Agreement ***not to exceed 15%***. ~~or if no such amount is set forth in the Agreement, a reasonable amount.~~ In such case, and also under Section 7.3.3.3, the Contractor shall keep and present, in such form as the Architect may prescribe, an itemized accounting together with appropriate supporting data. Unless otherwise provided in the Contract Documents, costs for the purposes of this Section 7.3.4 shall be limited to the following:

- **.1** Costs of labor ***shall be in accordance with the New Jersey Prevailing Wage Rates at the time of the Contract commencement with no additional "labor burden", future increases or any other considerations.*** ~~including applicable payroll taxes, fringe benefits required by agreement or custom, workers' compensation insurance, and other employee costs approved by the Architect~~;
- **.2** Costs of materials, supplies, and equipment, ~~including cost of transportation~~, whether incorporated or consumed;
- **.3** Rental costs of machinery and equipment, exclusive of hand tools, ***only when machinery or equipment is not already on site*** ~~whether rented from the Contractor or others~~;
- **.4** Costs of premiums for all bonds and insurance ***shall be limited to 1.5%***, ~~permit fees, and sales, use, or similar taxes,~~ directly related to the change; ~~and~~
- **.5** ~~Costs of supervision and field office personnel directly attributable to the change.~~ ***NOT PERMITTED!***

§ 7.3.4.1 The allowance for overhead and profit combined, included in the total cost to the Owner, may only include a Contractor, his Subcontractor and shall be limited to a total of 15% of the cost.

§7.3.4.2 In order to facilitate checking of quotations for extras or credits, all proposals, except those so minor that their propriety can be seen by inspection, shall be accompanied by a complete itemization of costs, including labor, materials and subcontracts. Labor and materials shall be itemized in the manner prescribed above. Where major cost items are subcontractors, they shall be itemized.

~~**§ 7.3.5** If the Contractor disagrees with the adjustment in the Contract Time, the Contractor may make a Claim in accordance with applicable provisions of Article 15~~.

§ 7.3.6 Upon receipt of a Construction Change Directive, the Contractor shall promptly proceed with the change in the Work involved and advise the Architect of the Contractor's agreement or disagreement with the method, if any, provided in the Construction Change Directive for determining the proposed adjustment in the Contract Sum or Contract Time.

AIA Document A201™ – 2017. Copyright © 1911, 1915, 1918, 1925, 1937, 1951, 1958, 1961, 1963, 1966, 1970, 1976, 1987, 1997, 2007 and 2017 by The American Institute of Architects. **All rights reserved. WARNING: This AIA® Document is protected by U.S. Copyright Law and International Treaties. Unauthorized reproduction or distribution of this AIA® Document, or any portion of it, may result in severe civil and criminal penalties, and will be prosecuted to the maximum extent possible under the law.** This draft was produced by AIA software at 09:54:27 on 07/24/2018 under Order No.9799823797 which expires on 01/19/2019, and is not for resale.
User Notes: (913728330)

§ 7.3.7 A Construction Change Directive signed by the Contractor indicates the Contractor's agreement therewith, including adjustment in Contract Sum and Contract Time or the method for determining them. Such agreement shall be effective immediately and shall be recorded as a Change Order.

§ 7.3.8 The amount of credit to be allowed by the Contractor to the Owner for a deletion or change that results in a net decrease in the Contract Sum shall be actual net cost as confirmed by the Architect. When both additions and credits covering related Work or substitutions are involved in a change, the allowance for overhead and profit shall be figured on the basis of net increase, if any, with respect to that change.

§ 7.3.9 Pending final determination of the total cost of a Construction Change Directive to the Owner, the Contractor may request payment for Work completed under the Construction Change Directive in Applications for Payment. The Architect will make an interim determination for purposes of monthly certification for payment for those costs and certify for payment the amount that the Architect determines, in the Architect's professional judgment, to be reasonably justified. The Architect's interim determination of cost shall adjust the Contract Sum on the same basis as a Change Order, subject to the right of either party to disagree and assert a Claim in accordance with Article 15.

§ 7.3.10 When the Owner and Contractor agree with a determination made by the Architect concerning the adjustments in the Contract Sum and Contract Time, or otherwise reach agreement upon the adjustments, such agreement shall be effective immediately and the Architect will prepare a Change Order. Change Orders may be issued for all or any part of a Construction Change Directive.

§ 7.4 Minor Changes in the Work

The Architect may order minor changes in the Work that are consistent with the intent of the Contract Documents and do not involve an adjustment in the Contract Sum or an extension of the Contract Time. The Architect's order for minor changes shall be in writing. If the Contractor believes that the proposed minor change in the Work will affect the Contract Sum or Contract Time, the Contractor shall notify the Architect ***within five (5) calendar days*** and shall not proceed to implement the change in the Work. If the Contractor performs the Work set forth in the Architect's order for a minor change without prior notice to the Architect that such change will affect the Contract Sum or Contract Time, the Contractor waives any adjustment to the Contract Sum or extension of the Contract Time.

ARTICLE 8 TIME

§ 8.1 Definitions

§ 8.1.1 Unless otherwise provided, Contract Time is the period of time, including authorized adjustments, allotted in the Contract Documents for Substantial Completion of the Work.

§ 8.1.2 ~~The date of commencement of the Work is the date established in the Agreement~~. ***The work to be performed under this Contract shall commence after the required insurance has been obtained and approved and within three days after issuance of the notice to proceed by the Owner. The Contract Time shall commence as of the date of the Notice to Proceed unless otherwise specified in the agreement.***

§ 8.1.3 The date of Substantial Completion is the date certified by the Architect in accordance with Section 9.8.

§ 8.1.4 The term "day" as used in the Contract Documents shall mean calendar day unless otherwise specifically defined.

§ 8.2 Progress and Completion

§ 8.2.1 Time limits stated in the Contract Documents are of the essence of the Contract. By executing the Agreement, the Contractor confirms that the Contract Time is a reasonable period for performing the Work.

§ 8.2.2 The Contractor shall not knowingly, except by agreement or instruction of the Owner in writing, commence the Work prior to the effective date of insurance required to be furnished by the Contractor and Owner.

§ 8.2.3 The Contractor shall proceed expeditiously with adequate forces and shall achieve Substantial Completion within the Contract Time.

§ 8.2.4 Owner, or his/her representative, in coordination with the Contractor, shall set work hours. Contractor may be required to work nights, weekends or holidays as necessary to complete the work in accordance with the

AIA Document A201™ – 2017. Copyright © 1911, 1915, 1918, 1925, 1937, 1951, 1958, 1961, 1963, 1966, 1970, 1976, 1987, 1997, 2007 and 2017 by The American Institute of Architects. **All rights reserved. WARNING: This AIA® Document is protected by U.S. Copyright Law and International Treaties. Unauthorized reproduction or distribution of this AIA® Document, or any portion of it, may result in severe civil and criminal penalties, and will be prosecuted to the maximum extent possible under the law.** This draft was produced by AIA software at 09:54:27 on 07/24/2018 under Order No.9799823797 which expires on 01/19/2019, and is not for resale.
User Notes: (913728330)

Schedule or in coordination with School Activities. Under no circumstances shall the Contractor begin or continue with work that is adversely impacting School activity or operations. All utility shutdowns, interruptions, work in or adjacent to existing buildings will be coordinated through the Owner, or his representative, and may have to be performed during hours when the School is not in operation. All cutting, hammering or other activity that is noisy, produces smoke or fumes or is otherwise disruptive to the School may have to be done during hours when the School is not in operation. Work required to be performed during non-school operating hours, as determined by the Owner or his representative, will be performed at no additional cost to the Owner.

§ 8.2.5 Contractor agrees to increase manpower, increase work hours, and to increase equipment necessary to maintain the Project Construction Schedule, and when also requested by the Architect and the Owner, and shall be without additional cost or charge to the Owner.

§8.2.6 Work shall commence within ten (10) days of the issuance by Owner of a Notice to Proceed and shall proceed uninterrupted to Final Completion. The Contractor further acknowledges and agrees that if the Contractor fails to complete substantially or cause the Substantial Completion of any portion of the Work as required by the Project Construction Schedule and/or within the Contract Time, the Owner will sustain extensive damages and serious loss as a result of such failure. The exact amount of such damages will be extremely difficult to ascertain. Therefore, the Owner and the Contractor agrees as set forth below.

- ***.1 If the Contractor fails to achieve partial completion within the requirements of the Milestone Dates or the approved Schedule or to achieve Substantial Completion of all or part of the Work when and as required by the Project Construction Schedule and/or within the Contract Time, the Owner shall be entitled to retain or recover from the Contractor and its Surety, as liquidated damages and not as a penalty, the amounts indicated in other sections of the Contract Documents and commencing upon the first day following expiration of the Project Construction Schedule and/or the Contract Time, as the case may be, and continuing until the actual Date of Substantial Completion.***

§8.2.7 Adherence to Schedule

- ***.1 The Owner reserves the right to withhold monthly progress payments if the Contractor is behind schedule, unless the Contractor documents, in writing, any delays that are not the fault of the Contractor and to which the Owner and Architect agree.***
- ***.2 Monthly progress payments will only be released after the Contractor reaches the status of completion for that month contemplated by the construction schedule.***

§ 8.3 Delays and Extensions of Time

§ 8.3.1 If the Contractor is delayed at any time in the commencement or progress of the Work by (1) an act or neglect of the Owner or Architect, of an employee of either, or of a Separate Contractor; (2) by changes ordered in the Work; ***or by occurrences beyond the control and without the fault or negligence of the Contractor and which by the exercise of reasonable diligence the Contractor is unable to prevent or provide against, including labor disputes (other than disputes limited to the work force of, or provided by, the Contractor or its Subcontractors), fire, unusual delay in deliveries not reasonably anticipatable, unavoidable casualties, or by other occurrences which the Architect, subject to the Owner's approval, determines may justify delay, then, provided that the Contractor is in compliance with Subparagraph 8.3.3 hereof, the Contract Time shall be extended by Change Order or Construction Change Directive for the length of time actually and directly caused by such occurrence as determined by the Architect and approved by the Contractor and Owner (such approval not to be unreasonably withheld, delayed, or conditioned); provided, however, that such extension of Contract Time shall be net of any delays caused by or due to the fault or negligence of the Contractor or which are otherwise the responsibility of the Contractor and shall also be net of any contingency or "float" time allowance included in the Contractor's construction schedule. The Contractor shall, in the event of any occurrence likely to cause a delay, cooperate in good faith with the Architect and Owner to minimize and mitigate the impact of any such occurrence and do all things reasonable under the circumstances to achieve this goal*** (~~3) by labor disputes, fire, unusual delay in deliveries, unavoidable casualties, adverse weather conditions documented in accordance with Section 15.1.6.2, or other causes beyond the Contractor's control; (4) by delay authorized by the Owner pending mediation and binding dispute resolution; or (5) by other causes that the Contractor asserts, and the Architect determines, justify delay, then the Contract Time shall be extended for such reasonable time as the Architect may determine~~.

§ 8.3.2 ~~Claims relating to time shall be made in accordance with applicable provisions of Article 15~~. ***Any claim for extension of time shall be made in writing to the Architect not more than five (5) days after the commencement of***

AIA Document A201™ – 2017. Copyright © 1911, 1915, 1918, 1925, 1937, 1951, 1958, 1961, 1963, 1966, 1970, 1976, 1987, 1997, 2007 and 2017 by The American Institute of Architects. **All rights reserved. WARNING: This AIA® Document is protected by U.S. Copyright Law and International Treaties. Unauthorized reproduction or distribution of this AIA® Document, or any portion of it, may result in severe civil and criminal penalties, and will be prosecuted to the maximum extent possible under the law.** This draft was produced by AIA software at 09:54:27 on 07/24/2018 under Order No.9799823797 which expires on 01/19/2019, and is not for resale.
User Notes: (913728330)

the delay, otherwise, it shall be waived. The Contractor shall provide an estimate of the probable effect of such delay on the progress of the work. No claim made beyond the five (5) days shall be considered valid.

§ 8.3.2.1 The Contractor agrees that if any delay in the Contractor's works unnecessarily delays the work of any other Contractor or Contractors, the Contractor shall in that case pay all costs and expenses incurred by such parties due to such delays and hereby authorizes the Owner to deduct the amount of such costs and expenses from any moneys due or to become due the Contractor under this Contract. The Architect shall be responsible for ascertaining whether the Contractor is responsible for delaying any of the work of any other Contractor. His decision shall be final.

§ 8.3.3 ***Notwithstanding anything to the contrary in the Contract Documents, any extension of the Contract Time, to the extent permitted under Paragraph 8.3.1., shall be the sole remedy of the Contractor for any (1) delay in the commencement, prosecution or completion of the Work, (2) hindrance or obstruction in the performance of the Work, (3) loss of productivity or (4) other similar claims (collectively referred to in this Paragraph 8.3.3. as "delays"), whether or not such delays are foreseeable, unless a delay is caused by acts of the Owner constituting active interference with the Contractor's performance of the Work and only to the extent such acts continue after the Contractor furnishes the Owner with written notice of such interference. In no event shall the Contractor be entitled to any compensation or recovery of any damages in connection with any delay including without limitation consequential damages, lost opportunity cost, impact damages or other similar remuneration. The Owner's exercise of any of its rights or remedies under the Contract Documents (including without limitation ordering changes in the Work or directing suspension, rescheduling or correction of the Work) regardless of the extent or frequency of the Owner's exercise of such rights or remedies shall not be construed as an act of interference with the Contractor's performance of the Work.*** This Section 8.3 does not preclude recovery of damages for delay by either party under other provisions of the Contract Documents.

§ 8.3.4 The Contractor agrees that the Owner can deduct from the Contract Sum, any wages paid by the Owner to any Inspector or Architect or other professional necessarily employed by the Owner for any number of days in excess of the number of days allowed in the specifications for completion of work.

§ 8.3.5 Where the cause of delay is due to weather conditions, an extension of time shall be granted only for unusually severe weather, as determined by reference to historical data. The term "historical data" as used in the previous sentence shall be construed according to this formula: Average rainfall (or snow or low temperature) for the past five years.

ARTICLE 9 PAYMENTS AND COMPLETION

§ 9.1 Contract Sum

§ 9.1.1 The Contract Sum is stated in the Agreement and, including authorized adjustments, is the total amount payable by the Owner to the Contractor for performance of the Work under the Contract Documents.

~~**§ 9.1.2** If unit prices are stated in the Contract Documents or subsequently agreed upon, and if quantities originally contemplated are materially changed so that application of such unit prices to the actual quantities causes substantial inequity to the Owner or Contractor, the applicable unit prices shall be equitably adjusted.~~

§ 9.1.3 Payment procedures shall be as follows:

1. ***Contractor shall submit Schedule of Values to Architect for review***
2. ***Prior to end of each pay period, Contractor shall submit a rough draft ("pencil copy") for their payment application for review and approval by the Architect.***
3. ***Upon approval of pencil copy, Contractor shall submit at least three copies of their payment application to the Architect for approval along with their certified payrolls and monthly manning reports.***
4. ***Architect will approve payments and forward to the Owner.***

§ 9.2 Schedule of Values

Where the Contract is based on a stipulated sum or Guaranteed Maximum Price, the Contractor shall submit a schedule of values to the Architect before the first Application for Payment, allocating the entire Contract Sum to the various portions of the Work ***which in the aggregate equals that total Contract Sum, divided so as to facilitate payments to Subcontractors, supported by such evidence of correctness as the Architect may direct or as required by the Owner. The schedule, when approved by the Architect and Owner, shall be used to monitor the progress***

AIA Document A201™ – 2017. Copyright © 1911, 1915, 1918, 1925, 1937, 1951, 1958, 1961, 1963, 1966, 1970, 1976, 1987, 1997, 2007 and 2017 by The American Institute of Architects. **All rights reserved. WARNING: This AIA® Document is protected by U.S. Copyright Law and International Treaties. Unauthorized reproduction or distribution of this AIA® Document, or any portion of it, may result in severe civil and criminal penalties, and will be prosecuted to the maximum extent possible under the law.** This draft was produced by AIA software at 09:54:27 on 07/24/2018 under Order No.9799823797 which expires on 01/19/2019, and is not for resale.
User Notes: (913728330)

of the Work and as a basis for Certificates for Payment. All items with entered values will be transferred by the Contractor to the "Applications and Certificate for Payment," and shall include the latest approved Change Orders and Construction Change Directives. Change Order values and Construction Change Directive values shall be broken down to show the various subcontracts. The Application for Payment shall be on AIA Document G702 and G703 and the approved Voucher obtainable from the Owner. Each item shall show its total scheduled value, value of previous applications, value of the application, percentage completed, value completed and value yet to be completed. All blanks and columns must be filled in, including every percentage complete figure . The schedule of values shall be prepared in the form, and supported by the data to substantiate its accuracy, required by the Architect. ~~This schedule, unless objected to by the Architect, shall be used as a basis for reviewing the Contractor's Applications for Payment. Any changes to the schedule of values shall be submitted to the Architect and supported by such data to substantiate its accuracy as the Architect may require, and unless objected to by the Architect, shall be used as a basis for reviewing the Contractor's subsequent Applications for Payment.~~

§ 9.2.2 The Contractor shall include the following separate items in his/her schedule of values:

Punch List Work - Minimum of 2% of contract value
Value for Record Drawings and manuals
Value for final clean-up by the Contractor
Value for shop drawings
Safety protections
Allowance

§ 9.3 Applications for Payment

§ 9.3.1 ***The Contractor shall submit to the Architect an itemized Application for Payment for their Contract on AIA Document G702 and G703 and the approved Voucher obtainable from the School District. Payroll Certification for all employees of all of the workers on the project shall be submitted as well as other such data for the purposes of summarizing the work and tracking the project. The Architect will process the application and forward it with his recommendations to the Owner*** ~~At least ten days before the date established for each progress payment, the Contractor shall submit to the Architect an itemized Application for Payment prepared in accordance with the schedule of values, if required under Section 9.2, for completed portions of the Work. The application shall be notarized, if required, and supported by all data substantiating the Contractor's right to payment that the Owner or Architect require, such as copies of requisitions, and releases and waivers of liens from Subcontractors and suppliers, and shall reflect retainage if provided for in the Contract Documents.~~

~~**§ 9.3.1.1** As provided in Section 7.3.9, such applications may include requests for payment on account of changes in the Work that have been properly authorized by Construction Change Directives, or by interim determinations of the Architect, but not yet included in Change Orders.~~

§ 9.3.1.2 Applications for Payment shall not include requests for payment for portions of the Work for which the Contractor does not intend to pay a Subcontractor or supplier, unless such Work has been performed by others whom the Contractor intends to pay.

§ 9.3.1.3 Until substantial completion, the Owner will pay 98% of the amount due the Contractor on account of progress payments until a balance of $500,000 is due the Contractor. The retainage will then be increased to Five Percent (5%) of the $500,000.00 balance of the contract until final completion. The retainage will be held until final acceptance of the project by the Architect and the Owner. The Contractor shall submit a separate voucher for the full amount of the retainage along with the Consent of Surety, A.I.A. Form G707A and the Contractor shall be required to furnish a Maintenance Bond for 100% of the Project Cost for a period of two (2) years from the Date of Final Acceptance.

§ 9.3.1.4 Upon acceptance of the work performed pursuant to this Contract for which the Contractor has agreed to the withholding of payments pursuant to Article 9 of this Contract, all amounts being withheld by the Owner shall be paid in accordance with Paragraph 9.3.1.3 without further withholding of any amounts for any purposes whatsoever, provided that the Contract has been satisfactorily completed.

§ 9.3.1.5 Each application for payment shall be accompanied by the following, all in form and substance satisfactory to the Owner and Architect:

AIA Document A201™ – 2017. Copyright © 1911, 1915, 1918, 1925, 1937, 1951, 1958, 1961, 1963, 1966, 1970, 1976, 1987, 1997, 2007 and 2017 by The American Institute of Architects. **All rights reserved. WARNING: This AIA® Document is protected by U.S. Copyright Law and International Treaties. Unauthorized reproduction or distribution of this AIA® Document, or any portion of it, may result in severe civil and criminal penalties, and will be prosecuted to the maximum extent possible under the law.** This draft was produced by AIA software at 09:54:27 on 07/24/2018 under Order No.9799823797 which expires on 01/19/2019, and is not for resale.
User Notes: (913728330)

1. ***A current contractor's lien waiver and duly executed and acknowledged sworn statement by an officer of the Contractor showing all subcontractors and materialmen with whom the Contractor has entered into subcontracts, the amount of each such subcontract, the amount requested for any subcontractor and materialmen in the requested progress payment and the amount to be paid to the Contractor from such progress payment.***
2. ***A Purchase Order or Voucher if required by the Owner.***
3. ***A Schedule Update approved by the Architect.***
4. ***An updated Shop Drawing Log showing the status of all of the required Shop Drawings.***

§ 9.3.2 ~~Unless otherwise provided in the Contract Documents,~~ ***At the Owner's Option,*** payments shall be made on account of materials and equipment delivered and suitably stored at the site for subsequent incorporation in the Work. If approved in advance by the Owner, payment may similarly be made for materials and equipment suitably stored off the site at a location agreed upon in writing. Payment for materials and equipment stored on or off the site shall be conditioned upon compliance by the Contractor with ~~procedures~~ ***Paragraphs 9.3.2.1, 9.3.2.2, 9.3.2.3 and 9.3.2.4 and*** satisfactory to the Owner to establish the Owner's title to such materials and equipment or otherwise protect the Owner's interest, and shall include the costs of applicable insurance, storage, and transportation to the site, for such materials and equipment stored off the site.

§ 9.3.2.1 With each Application for Payment the Contractor shall submit to the Architect and Owner a written list identifying each location where materials are stored off the Project site and the value of materials at each location. The Contractor shall procure insurance satisfactory to the Owner for materials stored off the Project site in an amount not less than the total value thereof.

§ 9.3.2.2 The consent of any surety shall be obtained to the extent required prior to the payment for any materials stored off the Project site.

§ 9.3.2.3 Representatives of the Owner shall have the right to make inspections of the off-site storage areas at any time.

§ 9.3.2.4 Materials stored off site shall be protected from diversion, destruction, theft and damage to the satisfaction of the Owner, shall specifically be marked for use on the Project and shall be segregated from other materials at the storage facility.

§ 9.3.3 ***The Contractor warrants and agrees that title to all Work will pass to the Owner either by incorporation in the construction or upon receipt of payment therefor by the Contractor, whichever occurs first, free and clear of all liens, claims, security interests, or encumbrances whatsoever, that the vesting of such title shall not impose any obligation on Owner or relieve Contractor of any of its obligations under the Contract, that the Contractor shall remain responsible for damages to or loss of the Work, whether completed or under construction, until responsibility for the Work has been accepted by Owner in the manner set forth in the Contract Documents, and that no Work covered by an Application for Payment will have been acquired by the Contractor, or by any other person performing Work at the site or furnishing materials and equipment for the Project, subject to an agreement under which an interest therein or an encumbrance thereon is retained by the seller or otherwise imposed by the Contractor or such other person*** ~~The Contractor warrants that title to all Work covered by an Application for Payment will pass to the Owner no later than the time of payment. The Contractor further warrants that upon submittal of an Application for Payment all Work for which Certificates for Payment have been previously issued and payments received from the Owner shall, to the best of the Contractor's knowledge, information, and belief, be free and clear of liens, claims, security interests, or encumbrances, in favor of the Contractor, Subcontractors, suppliers, or other persons or entities that provided labor, materials, and equipment relating to the Work.~~

§ 9.3.4 The Contractor acknowledges that actual payments pursuant to any Application for Payment and Certificate for Payment must be voted upon by the Owner at a public meeting. Typically, the Owner has monthly public business meetings. Provided an Application for Payment is received by the Architect not later than the date required by the Owner, and upon issuance of a Certificate of Payment for all or part of the Application for Payment, the Owner shall make payment to the Contractor not later than the tenth (10th) day after the Owner's regular public meeting held during the following month. If an Application for Payment is received by the Architect after the application date fixed above, payment shall be made by the Owner not later than ten (10)

AIA Document A201™ – 2017. Copyright © 1911, 1915, 1918, 1925, 1937, 1951, 1958, 1961, 1963, 1966, 1970, 1976, 1987, 1997, 2007 and 2017 by The American Institute of Architects. **All rights reserved. WARNING: This AIA® Document is protected by U.S. Copyright Law and International Treaties. Unauthorized reproduction or distribution of this AIA® Document, or any portion of it, may result in severe civil and criminal penalties, and will be prosecuted to the maximum extent possible under the law.** This draft was produced by AIA software at 09:54:27 on 07/24/2018 under Order No.9799823797 which expires on 01/19/2019, and is not for resale.
User Notes: (913728330)

calendar days after the next regular public meeting of the Owner held after the late submitted Application for Payment has been reviewed and certified for payment by the Architect.

§ 9.3.4.1 Contractor shall comply with the terms of the agreement between Owner and Contractor with reference to Applications for Payment.

§ 9.3.4.2 Certification shall be subject to Consent of Surety presented by the Contractor for each application.

§ 9.4 Certificates for Payment

§ 9.4.1 The Architect will, within ~~seven~~ ***Fourteen*** days after receipt of the Contractor's Application for Payment, either (1) issue to the Owner a Certificate for Payment in the full amount of the Application for Payment, with a copy to the Contractor; or (2) issue to the Owner a Certificate for Payment for such amount as the Architect determines is properly due, and notify the Contractor and Owner of the Architect's reasons for withholding certification in part as provided in Section 9.5.1; or (3) withhold certification of the entire Application for Payment, and notify the Contractor and Owner of the Architect's reason for withholding certification in whole as provided in Section 9.5.1. ***The Architect must receive this information in accordance with the schedule set forth at the Pre-Construction Meeting***

§ 9.4.2 The issuance of a Certificate for Payment will constitute a representation by the Architect to the Owner, based on the Architect's evaluation of the Work and the data in the Application for Payment, that, to the best of the Architect's knowledge, information, and belief, the Work has progressed to the point indicated, the quality of the Work is in accordance with the Contract Documents, and that the Contractor is entitled to payment in the amount certified. The foregoing representations are subject to an evaluation of the Work for conformance with the Contract Documents upon Substantial Completion, to results of subsequent tests and inspections, to correction of minor deviations from the Contract Documents prior to completion, and to specific qualifications expressed by the Architect. However, the issuance of a Certificate for Payment will not be a representation that the Architect has (1) made exhaustive or continuous on-site inspections to check the quality or quantity of the Work; (2) reviewed construction means, methods, techniques, sequences, or procedures; (3) reviewed copies of requisitions received from Subcontractors and suppliers and other data requested by the Owner to substantiate the Contractor's right to payment; or (4) made examination to ascertain how or for what purpose the Contractor has used money previously paid on account of the Contract Sum.

§ 9.5 Decisions to Withhold Certification

§ 9.5.1 The Architect may withhold a Certificate for Payment in whole or in part, to the extent reasonably necessary to protect the Owner, if in the Architect's opinion the representations to the Owner required by Section 9.4.2 cannot be made. If the Architect is unable to certify payment in the amount of the Application, the Architect will notify the Contractor and Owner as provided in Section 9.4.1. If the Contractor and Architect cannot agree on a revised amount, the Architect will promptly issue a Certificate for Payment for the amount for which the Architect is able to make such representations to the Owner. The Architect may also withhold a Certificate for Payment or, because of subsequently discovered evidence, may nullify the whole or a part of a Certificate for Payment previously issued, to such extent as may be necessary in the Architect's opinion to protect the Owner from loss for which the Contractor is responsible, including loss resulting from acts and omissions described in Section 3.3.2, because of

- **.1** defective Work not remedied;
- **.2** third party claims filed or reasonable evidence indicating probable filing of such claims, unless security acceptable to the Owner is provided by the Contractor;
- **.3** failure of the Contractor to make payments properly to Subcontractors or suppliers for labor, materials or equipment;
- **.4** reasonable evidence that the Work cannot be completed for the unpaid balance of the Contract Sum;
- **.5** damage to the Owner or a Separate Contractor;
- **.6** reasonable evidence that the Work will not be completed within the Contract Time, and that the unpaid balance would not be adequate to cover actual or liquidated damages for the anticipated delay; or
- **.7** repeated failure to carry out the Work in accordance with the Contract Documents.
- ***.8 The failure of any Contractors to comply with mandatory requirements for maintaining record drawings. The Contractor shall be required to check record drawings each month. Written confirmation that the record drawings are up-to-date shall be required by the Architect before approval of the Contractor's monthly payment requisition will be considered.***
- ***.9 Shop drawings not submitted as required by the Contract Documents.***

AIA Document A201™ – 2017. Copyright © 1911, 1915, 1918, 1925, 1937, 1951, 1958, 1961, 1963, 1966, 1970, 1976, 1987, 1997, 2007 and 2017 by The American Institute of Architects. **All rights reserved. WARNING: This AIA® Document is protected by U.S. Copyright Law and International Treaties. Unauthorized reproduction or distribution of this AIA® Document, or any portion of it, may result in severe civil and criminal penalties, and will be prosecuted to the maximum extent possible under the law.** This draft was produced by AIA software at 09:54:27 on 07/24/2018 under Order No.9799823797 which expires on 01/19/2019, and is not for resale.
User Notes: (913728330)

.10 Failure to cooperate with Owner or Architect relative to construction schedule, material storage, coordination with the School District, clean up or safety.

~~**§ 9.5.2** When either party disputes the Architect's decision regarding a Certificate for Payment under Section 9.5.1, in whole or in part, that party may submit a Claim in accordance with Article 15~~.

§ 9.5.3 When the reasons for withholding certification are removed, certification will be made for amounts previously withheld.

§ 9.5.4 If the Architect withholds certification for payment under Section 9.5.1.3, the Owner may, at its sole option, issue joint checks to the Contractor and to any Subcontractor or supplier to whom the Contractor failed to make payment for Work properly performed or material or equipment suitably delivered. If the Owner makes payments by joint check, the Owner shall notify the Architect and the Contractor shall reflect such payment on its next Application for Payment.

.1 If the Contractor disputes any determination by the Architect with regard to any Certificate of Payment, the Contractor nevertheless expeditiously shall continue to prosecute the Work.

.2 The failure of the Owner to retain any percentage payable to the Contractor or any change in or variation of the time, method or condition of payments to the Contractor shall not release or discharge to any extent whatsoever the Surety upon any bond given by Contractor hereunder. The Owner shall have the right, but not the duty, to disregard any schedule of items and costs that the Contractor may have furnished and defer or withhold in whole or in part any payment if it appears to the Owner, in its sole discretion, that the balance available in the Contract Sum as adjusted and less retained percentages, may be insufficient to complete the Work.

.3 Notwithstanding any provision of any law to the contrary, the Contractor agrees that the time and conditions for payment under the Contract for Construction shall be as stated in the Contract for Construction and in the Contract Documents. The Contractor specifically agrees that Owner's failure to give, or timely give, notice of:

.1 any error in an invoice or application for payment submitted by the Contractor for payment; or

.2 any deficiency or non-compliance with the Contract Documents with respect to any Work for which payment is requested, shall not waive or limit any of the Owner's rights or defenses under the Contract for Construction and the Contract Documents, or require the Owner to make a payment in advance of the time, or in an amount greater than, as provided by the Contract for Construction.

.4 The Contractor shall make payments to its subcontractors in accordance with the provisions of any applicable law governing the time, conditions, or requirements for payment to its Subcontractors, and shall comply with the provisions of any such law.

.1 The Contractor will pay its Subcontractors no later than (15) fifteen days after receipt of a payment from the Owner which includes payment for the work of any such Subcontractors.

.2 The Contractor shall require its Subcontractors, by appropriate agreement, to pay their subcontractors and suppliers (of any tier) within the same time.

.3 The Contractor and its Surety shall indemnify and defend the Owner any loss, cost, expenses, or damages including attorney's fees, arising from or relating to the Contractor's failure to comply with such law.

§ 9.6 Progress Payments

§ 9.6.1 After the Architect has issued a Certificate for Payment, the Owner shall make payment in the manner and within the time provided in the Contract Documents and shall so notify the Architect. ***Notwithstanding Certification by the Architect, the Owner may refuse to make payment based on any default by the Contractor including, but not limited to those defaults set forth in Subparagraphs 9.5.1 through 9.5.1.11. The Owner shall not be deemed in default by reason of withholding payment while any of such defaults by the Contractor remain uncured.***

§ 9.6.2 The Contractor shall pay each Subcontractor, no later than seven days after receipt of payment from the Owner, the amount to which the Subcontractor is entitled, reflecting percentages actually retained from payments to the Contractor on account of the Subcontractor's portion of the Work. The Contractor shall, by appropriate agreement with each Subcontractor, require each Subcontractor to make payments to Sub-subcontractors in a similar manner.

AIA Document A201™ – 2017. Copyright © 1911, 1915, 1918, 1925, 1937, 1951, 1958, 1961, 1963, 1966, 1970, 1976, 1987, 1997, 2007 and 2017 by The American Institute of Architects. **All rights reserved. WARNING: This AIA® Document is protected by U.S. Copyright Law and International Treaties. Unauthorized reproduction or distribution of this AIA® Document, or any portion of it, may result in severe civil and criminal penalties, and will be prosecuted to the maximum extent possible under the law.** This draft was produced by AIA software at 09:54:27 on 07/24/2018 under Order No.9799823797 which expires on 01/19/2019, and is not for resale.
User Notes: (913728330)

§ 9.6.3 The Architect will, on request, furnish to a Subcontractor, if practicable, information regarding percentages of completion or amounts applied for by the Contractor and action taken thereon by the Architect and Owner on account of portions of the Work done by such Subcontractor.

§ 9.6.4 The Owner has the right to request written evidence from the Contractor that the Contractor has properly paid Subcontractors and suppliers amounts paid by the Owner to the Contractor for subcontracted Work. If the Contractor fails to furnish such evidence within seven days, the Owner shall have the right to contact Subcontractors and suppliers to ascertain whether they have been properly paid. Neither the Owner nor Architect shall have an obligation to pay, or to see to the payment of money to, a Subcontractor or supplier, except as may otherwise be required by law.

§ 9.6.5 The Contractor's payments to suppliers shall be treated in a manner similar to that provided in Sections 9.6.2, 9.6.3 and 9.6.4.

§ 9.6.6 A Certificate for Payment, a progress payment, or partial or entire use or occupancy of the Project by the Owner shall not constitute acceptance of Work not in accordance with the Contract Documents.

§ 9.6.7 Unless the Contractor provides the Owner with a payment bond in the full penal sum of the Contract Sum, payments received by the Contractor for Work properly performed by Subcontractors or provided by suppliers shall be held by the Contractor for those Subcontractors or suppliers who performed Work or furnished materials, or both, under contract with the Contractor for which payment was made by the Owner. Nothing contained herein shall require money to be placed in a separate account and not commingled with money of the Contractor, create any fiduciary liability or tort liability on the part of the Contractor for breach of trust, or entitle any person or entity to an award of punitive damages against the Contractor for breach of the requirements of this provision.

§ 9.6.8 Provided the Owner has fulfilled its payment obligations under the Contract Documents, the Contractor shall defend and indemnify the Owner from all loss, liability, damage or expense, including reasonable attorney's fees and litigation expenses, arising out of any lien claim or other claim for payment by any Subcontractor or supplier of any tier. Upon receipt of notice of a lien claim or other claim for payment, the Owner shall notify the Contractor. If approved by the applicable court, when required, the Contractor may substitute a surety bond for the property against which the lien or other claim for payment has been asserted.

§ 9.6.9** The **Owner will issue timely payments to the Contractor in accordance with the requirements of "The Prompt Payment Act", N.J.S.A. 2A:30A-1, et seq. The Contractor is hereby notified that the Owner, as a public entity, requires all payments to be approved at scheduled public Board of Education meetings. The vote on authorization for payments will be made at the first public meeting of the Board, following the Board's receipt of the Architect's authorization for payment, and paid during the subsequent payment cycle.

§ 9.7 Failure of Payment

If the Architect does not issue a Certificate for Payment, through no fault of the Contractor, within seven days after receipt of the Contractor's Application for Payment, or if the Owner does not ***for reasons other than a default of the Contract, including but not limited to those defaults set forth in Subparagraphs 9.5.1.1 through 9.5.1.11*** pay the Contractor within seven days after the date established in the Contract Documents, the amount certified by the Architect or awarded by ***a court of law*** ~~binding dispute resolution~~, then the Contractor may, upon seven additional days' notice to the Owner and Architect, stop the Work until payment of the amount owing has been received. The Contract Time shall be extended appropriately ~~and the Contract Sum shall be increased by the amount of the Contractor's reasonable costs of shutdown, delay and start-up, plus interest as provided for in the Contract Documents~~.

§ 9.8 Substantial Completion

§ 9.8.1 Substantial Completion is the stage in the progress of the Work when the Work or designated portion thereof ***which the Owner agrees to accept separately*** is sufficiently complete in accordance with ***this definition and*** the Contract Documents so that the Owner can occupy or utilize the Work for its intended use. ***The Work will not be considered substantially complete until all project systems included in the Work are operational as designed and scheduled, all designated or required inspections, certifications, permits, approvals, licenses and other documents from any governmental authority having jurisdiction thereof necessary for the beneficial use and occupancy of the Project are received, designated instruction of Owner's personnel has been completed, and all final finishes***

AIA Document A201™ – 2017. Copyright © 1911, 1915, 1918, 1925, 1937, 1951, 1958, 1961, 1963, 1966, 1970, 1976, 1987, 1997, 2007 and 2017 by The American Institute of Architects. **All rights reserved. WARNING: This AIA® Document is protected by U.S. Copyright Law and International Treaties. Unauthorized reproduction or distribution of this AIA® Document, or any portion of it, may result in severe civil and criminal penalties, and will be prosecuted to the maximum extent possible under the law.** This draft was produced by AIA software at 09:54:27 on 07/24/2018 under Order No.9799823797 which expires on 01/19/2019, and is not for resale.
User Notes: (913728330)

within the Contract are in place. In general, the only remaining Work shall be minor in nature, so that the Owner can occupy the building on that date and the completion of the Work by the Contractor would not materially interfere or hamper the Owner's (or those claiming by, through or under the Owner) normal operations. Contractor recognizes that normal operations requires the use and occupancy of the Work by students and faculty without interruption and that any punchlist or corrective work shall be done at times when the Work is not so occupied. As a further condition of substantial completion acceptance, the Contractor shall certify that all remaining Work will be completed within thirty (30) consecutive calendar days or as agreed upon following the date of substantial completion. In addition to any other definitions of Substantial Completion as defined by the contract documents, the following is required before the project is considered "Substantially Complete":

In addition to the above the following items must be completed in order to deem the work Substantially Complete:

1. ***All required final inspections have been completed by the authority having jurisdiction resulting in a TCO or CO.***

§ 9.8.2 ***"PUNCH LIST":*** When the Contractor considers that the Work, or a portion thereof which the Owner agrees to accept separately, is substantially complete, the Contractor shall prepare and submit to the Architect a comprehensive list of items ***"PUNCH LIST"*** to be completed or corrected ***along with all special warranties required by the Contract Documents endorsed by the contractor*** prior to final payment. Failure to include an item on such list does not alter the responsibility of the Contractor to complete all Work in accordance with the Contract Documents.

§ 9.8.2.1 The Contractor shall perform a Quality Control / Quality Assurance QC/QA Punchlist of all work prior to requesting Substantial Completion and a punch list from the Owners Team. The Contractor's Project Manager shall take the lead and conduct an onsite review with the Contractor's superintendent and representation from every major sub prime contractor. Notification of this onsite walk thru shall be provided in writing to all members of the Owners Team who may or may not choose to attend. The Contractor's Project Manager shall record and distribute this QC/QA Punchlist in a matrix that provides an additional column for the Contractor to document the completion of the work and the date. After successful completion of the Contractor's QC/QA Punchlist and all work, the Contractor shall request the Owners Team perform a Punchlist. Substantial Completion shall be requested in accordance with paragraph 9.8.1.

§ 9.8.3 Upon receipt of the Contractor's list, the Architect will make an inspection to determine whether the Work or designated portion thereof is substantially complete. If the Architect's inspection discloses any item, whether or not included on the Contractor's list, which is not sufficiently complete in accordance with the Contract Documents ***and the requirements above*** so that the Owner can occupy or utilize the Work or designated portion thereof for its intended use, the Contractor shall, before issuance of the Certificate of Substantial Completion, complete or correct such item upon notification by the Architect. In such case, the Contractor shall then submit ***in writing*** a request for another inspection by the Architect to determine Substantial Completion.

§ 9.8.4 When the Work or designated portion thereof is substantially complete, the Architect will prepare a Certificate of Substantial Completion that shall establish the date of Substantial Completion; establish responsibilities of the Owner and Contractor for security, maintenance, heat, utilities, damage to the Work and insurance; and fix the time within which the Contractor shall finish all items on the list accompanying the Certificate. Warranties required by the Contract Documents shall commence on the date of Substantial Completion of the Work or designated portion thereof unless otherwise provided in the Certificate of Substantial Completion.

§ 9.8.4.1 The Architect's Certificate of Substantial Completion shall be subject to the Owner's final approval.

§ 9.8.5 The Certificate of Substantial Completion shall be submitted to the Owner and Contractor for their written acceptance of responsibilities assigned to them in the Certificate. ~~Upon such acceptance, and consent of surety if any, the Owner shall make payment of retainage applying to the Work or designated portion thereof. Such payment shall be adjusted for Work that is incomplete or not in accordance with the requirements of the Contract Documents~~.

§ 9.9 Partial Occupancy or Use

§ 9.9.1 The Owner may occupy or use any completed or partially completed portion of the Work at any stage when such portion is designated by separate agreement with the Contractor, provided such occupancy or use is consented to by the insurer and authorized by public authorities having jurisdiction over the Project. Such partial occupancy or

AIA Document A201™ – 2017. Copyright © 1911, 1915, 1918, 1925, 1937, 1951, 1958, 1961, 1963, 1966, 1970, 1976, 1987, 1997, 2007 and 2017 by The American Institute of Architects. **All rights reserved. WARNING: This AIA® Document is protected by U.S. Copyright Law and International Treaties. Unauthorized reproduction or distribution of this AIA® Document, or any portion of it, may result in severe civil and criminal penalties, and will be prosecuted to the maximum extent possible under the law.** This draft was produced by AIA software at 09:54:27 on 07/24/2018 under Order No.9799823797 which expires on 01/19/2019, and is not for resale.
User Notes: (913728330)

use may commence whether or not the portion is substantially complete, provided the Owner and Contractor have accepted in writing the responsibilities assigned to each of them for payments, retainage, if any, security, maintenance, heat, utilities, damage to the Work and insurance, and have agreed in writing concerning the period for correction of the Work and commencement of warranties required by the Contract Documents. When the Contractor considers a portion substantially complete, the Contractor shall prepare and submit a list to the Architect as provided under Section 9.8.2. Consent of the Contractor to partial occupancy or use shall not be unreasonably withheld. The stage of the progress of the Work shall be determined by written agreement between the Owner and Contractor or, if no agreement is reached, by decision of the Architect.

§ 9.9.2 Immediately prior to such partial occupancy or use, the Owner, Contractor, and Architect shall jointly inspect the area to be occupied or portion of the Work to be used in order to determine and record the condition of the Work.

§ 9.9.3 ~~Unless otherwise agreed upon~~, partial occupancy or use of a portion or portions of the Work shall not constitute acceptance of Work not complying with the requirements of the Contract Documents.

§ 9.9.4 The occupancy of any portion of the Work shall not constitute acceptance of any Work, except as hereinafter stated, nor does it waive the Owner's right to Liquidated Damages. Final Acceptance of the Work shall be for the whole Work only and not part.

§9.9.5 As portions of the Project are completed, and occupied, Contractor shall ensure the continuing construction activity will not unreasonably interfere with the use, occupancy and quiet enjoyment of the completed portions thereof.

- ***.1 The Contractor agrees to coordinate the Work with the Architect and the Owner in order to minimize disturbance to occupied portions of the structure.***
- ***.2 In the event performances or scheduled events by the Owner are conducted in close proximity to the Work in progress, the Contractor agrees to cease all work which may disturb the Owner's occupants at the site.***

§ 9.10 Final Completion and Final Payment

§ 9.10.1 Upon receipt of the Contractor's notice that the Work is ready for final inspection and acceptance and upon receipt of a final Application for Payment, the Architect will promptly make such inspection. When the Architect finds the Work acceptable under the Contract Documents and the Contract fully performed, the Architect will promptly issue a final Certificate for Payment stating that to the best of the Architect's knowledge, information and belief, and on the basis of the Architect's on-site visits and inspections, the Work has been completed in accordance with the Contract Documents and that the entire balance found to be due the Contractor and noted in the final Certificate is due and payable. The Architect's final Certificate for Payment will constitute a further representation that conditions listed in Section 9.10.2 as precedent to the Contractor's being entitled to final payment have been fulfilled. ***All warranties and guarantees required pursuant to the Contract Documents shall be assembled and delivered by the Contractor to the Owner as part of the final application for payment. The final Certificate for Payment will not be issued by the Architect until all warranties and guarantees have been received and accepted by the Owner.***

§ 9.10.1.1 The Architect's Certificate of Final Completion shall be subject to the Owner's final approval.

§ 9.10.2 Neither final payment nor any remaining retained percentage shall become due until the Contractor submits to the Architect (1) an affidavit that payrolls, bills for materials and equipment, and other indebtedness connected with the Work for which the Owner or the Owner's property might be responsible or encumbered (less amounts withheld by Owner) have been paid or otherwise satisfied, (2) a certificate evidencing that insurance required by the Contract Documents to remain in force after final payment is currently in effect, (3) a written statement that the Contractor knows of no reason that the insurance will not be renewable to cover the period required by the Contract Documents, (4) consent of surety, if any, to final payment, (5) documentation of any special warranties, such as manufacturers' warranties or specific Subcontractor warranties, and (6) ***evidence of compliance with all requirements of the Contract Documents: notices, certificates, affidavits, other requirements to complete obligations under the Contract Documents: including but not limited to (a) delivery to Architect of Contractor's General Warranty (as described in Paragraph 3.5) and each written warranty and assignment thereof prepared in duplicate, certificates of inspections, and bonds for Architect's review and delivery to Owner, (b) delivery to***

AIA Document A201™ – 2017. Copyright © 1911, 1915, 1918, 1925, 1937, 1951, 1958, 1961, 1963, 1966, 1970, 1976, 1987, 1997, 2007 and 2017 by The American Institute of Architects. **All rights reserved. WARNING: This AIA® Document is protected by U.S. Copyright Law and International Treaties. Unauthorized reproduction or distribution of this AIA® Document, or any portion of it, may result in severe civil and criminal penalties, and will be prosecuted to the maximum extent possible under the law.** This draft was produced by AIA software at 09:54:27 on 07/24/2018 under Order No.9799823797 which expires on 01/19/2019, and is not for resale.
User Notes: (913728330)

Architect a printed or typewritten operating, servicing, maintenance and cleaning instructions for all Work; parts lists and special tools for mechanical and electrical Work, in approval form, (c) delivery to the Architect of specified Project record documents and (d) delivery to Owner of a Final Waiver of Liens (AIA Document G-706 or other form satisfactory to Owner), covering all Work including that of all Subcontractors, vendors, labor, materials and services, executed by an authorized officer and duly notarized. In addition to the foregoing, all other submissions required by other articles and paragraphs of the Specifications including final construction schedule shall be submitted to the Architect before approval of final payment ~~if required by the Owner, other data establishing payment or satisfaction of obligations, such as receipts and releases and waivers of liens, claims, security interests, or encumbrances arising out of the Contract, to the extent and in such form as may be designated by the Owner.~~ If a Subcontractor refuses to furnish a release or waiver required by the Owner, the Contractor may furnish a bond satisfactory to the Owner to indemnify the Owner against such lien, claim, security interest, or encumbrance. If a lien, claim, security interest, or encumbrance remains unsatisfied after payments are made, the Contractor shall refund to the Owner all money that the Owner may be compelled to pay in discharging the lien, claim, security interest, or encumbrance, including all costs and reasonable attorneys' fees.

§ 9.10.3 If, after Substantial Completion of the Work, final completion thereof is materially delayed through no fault of the Contractor or by issuance of Change Orders affecting final completion, and the Architect so confirms, the Owner shall, upon application by the Contractor and certification by the Architect, and without terminating the Contract, make payment of the balance due for that portion of the Work fully completed, corrected, and accepted. If the remaining balance for Work not fully completed or corrected is less than retainage stipulated in the Contract Documents, and if bonds have been furnished, the written consent of the surety to payment of the balance due for that portion of the Work fully completed and accepted shall be submitted by the Contractor to the Architect prior to certification of such payment. Such payment shall be made under terms and conditions governing final payment, except that it shall not constitute a waiver of Claims.

§ 9.10.5 Acceptance of final payment by the Contractor, a Subcontractor, or a supplier, shall constitute a waiver of claims by that payee except those previously made in writing and identified by that payee as unsettled at the time of final Application for Payment.

9.11 LIQUIDATED DAMAGES

§ 9.11.1 The Contractor understands and agrees that all work must be performed in an orderly and closely coordinated sequence so that the date for substantial completion is met.

§ 9.11.2 If the Contractor fails to complete his work or fails to complete a portion of his work, he shall pay the Owner, as liquidated damages and not as a penalty, the sum as specified in the technical portion of the contract documents. Such amount is agreed upon as a reasonable and proper measure which the Owner will sustain each calendar day by failure of the Contractor to complete work within the stipulated time.

§ 9.11.3 For projects that have milestone completion dates, liquidated damages shall apply to all phased construction milestone dates as established by the phasing plan, sequencing section and/or the Summary of Work.

§ 9.11.4 Substantial completion will be determined by the Architect as defined in paragraph 9.8.1.

§ 9.11.5 For damage occurring at the time of delay, the Owner may retain the amount due to him under this clause from any payments due to the Contractor.

§ 9.11.6 The Owner will suffer financial loss if the project is not substantially complete on the date set forth in the Contract Documents. The Contractor (and the Contractor's Surety) shall be liable for and pay to the Owner the sum of $1,000.00 stipulated and fixed, agreed as liquidated damages for each calendar day of delay until the work is substantially complete.

§ 9.11.7 <u>ONE THOUSAND ($1,000) PER DAY CALENDAR DAY FOR PUNCH LIST ITEMS.</u> Contractor has thirty (30) days to complete the final punch list. Liquidated damages will be addressed starting on the 31st day after receipt of Notice of Substantial Completion or issuance of the Final Punch List, whichever comes later, to that date of the Architect's acceptance that all punch list(s) have been completed.

AIA Document A201™ – 2017. Copyright © 1911, 1915, 1918, 1925, 1937, 1951, 1958, 1961, 1963, 1966, 1970, 1976, 1987, 1997, 2007 and 2017 by The American Institute of Architects. **All rights reserved. WARNING: This AIA® Document is protected by U.S. Copyright Law and International Treaties. Unauthorized reproduction or distribution of this AIA® Document, or any portion of it, may result in severe civil and criminal penalties, and will be prosecuted to the maximum extent possible under the law.** This draft was produced by AIA software at 09:54:27 on 07/24/2018 under Order No.9799823797 which expires on 01/19/2019, and is not for resale.
User Notes: (913728330)

ARTICLE 10 PROTECTION OF PERSONS AND PROPERTY

§ 10.1 Safety Precautions and Programs

The Contractor shall be responsible for initiating, maintaining, and supervising all safety precautions and programs in connection with the performance of the Contract.

§ 10.1.1

1. ***The Contractor must fully comply with the job safety requirements in addition to all Federal, State and Local safety guidelines. All cost associated with complying with all safety requirements shall be included in each contractor's base bid.***
2. ***The Contractor will serve as the overall Project Safety Coordinator and shall be responsible for all issues of safety and protection. The Contractor shall designate a safety person at the job site while the contractor is working on the project site. The designated safety person shall be responsible for the safety of their work and for their workers and to make continuous inspections for all safety issues relating to his work. The Architect is not responsible for safety on this project but will endeavor to promote safety. Each Contractor must comply with job Safety Requirements in addition to OSHA and local agency requirements. Failure to comply with safety issues will be grounds for withholding of payments.***
3. ***Contractor will comply with all reasonable requests of the Owner and Architect with respect to additional security and protections required for work interfacing with Facility Operations. Safety is of utmost importance on this project and all issues relative to safety and protection of the Facility, Staff and Occupants will be treated as emergency needs and will not be subject to the 7-day notice requirements of Article 14.***

    A. ***The Contractor to provide, maintain, relocate and remove in coordination the Architect a 6' high, perimeter security fence. Fence will surround the building and proposed parking areas and will have signage attached at 100' intervals advising "Construction Area – Please Keep Out". The Contractor to be responsible for opening and securing site each day.***
    B. ***Orange safety fencing will be installed around the entire area of any and all earthwork, excavations, etc. and will be maintained until the work is complete.***
    C. ***This is a hard hat job. Identifying hard hats shall be worn at all times.***
    D. ***Hot work permits will be issued by foreman for all activities involving open flames.***

4. ***The proper execution of the required safety provisions is directly related to the general condition safety line item on the schedule of values. The failure to provide a competent person on site to properly identify and take immediate corrective action may result in deductions to the general condition safety line item of the schedule of values.***
5. ***The Contractor shall be responsible for the immediate investigation and resolution of all safety and environmental complaints / issues generated by contractor employees, owners, owner's representatives or members of the public.***
6. ***Contractor shall maintain all egress routes throughout the work area. Contractor shall provide fire extinguishers throughout as deemed necessary by the fire official.***
7. ***Contractor's safety representative shall perform a daily safety inspection walk through to ensure that all requirements of the OSHA Standards, Fire Protection Standards and Safe Work Practices are being with and/or corrected. The responsibility of the Contractor is to provide a safe and healthy work environment for construction personnel, Owner's personnel and representative, and the public.***
8. ***Upon written receipt of safety concerns and /or issues, the Contractor shall respond in writing addressing how the safety concerns or issues were resolved.***
9. ***The Contractor's response and compliance with correction of deficiencies noted in the safety concerns notice issued by the Authority having jurisdiction is mandatory. Failure to comply will be grounds for withholding of progress payments until the conditions are acceptable to O.S.H.A or Authority having local jurisdiction.***
10. ***Contractor shall have all required personal protective equipment and materials available for use by each employee as required by Federal, State and Local guidelines.***
11. ***Contractor shall supply proper equipment and crew sizes as necessary to safely complete the work.***
12. ***Contractor shall provide documented safety training for each of their employees and subcontractor's employees no later than the first day they arrive on site. The training shall be documented and signed by the trainer and employee. A copy of all safety-training documents is to be provided to the Owner and updated as manpower loading increases.***

AIA Document A201™ – 2017. Copyright © 1911, 1915, 1918, 1925, 1937, 1951, 1958, 1961, 1963, 1966, 1970, 1976, 1987, 1997, 2007 and 2017 by The American Institute of Architects. **All rights reserved. WARNING: This AIA® Document is protected by U.S. Copyright Law and International Treaties. Unauthorized reproduction or distribution of this AIA® Document, or any portion of it, may result in severe civil and criminal penalties, and will be prosecuted to the maximum extent possible under the law.** This draft was produced by AIA software at 09:54:27 on 07/24/2018 under Order No.9799823797 which expires on 01/19/2019, and is not for resale.
User Notes: (913728330)

13. ***The Contractor shall be responsible for providing and maintaining all temporary emergency egress routes. The Contractor shall obtain the approval of the Building and Fire Departments for all temporary emergency egress routes.***
14. ***Contractor shall provide OSHA approved pedestrian walking bridges as necessary to protect against overhead hazards.***
15. ***Contractor shall provide, relocate and /or maintain barricades, signage, provide flagmen etc. as necessary to ensure public safety and safe egress. Contractor to provide, maintain, relocate and remove in coordination with the Owner and/or Architect, the perimeter security fence.***
16. ***Contractor shall submit to the Architect, all MSDS sheets and shall cooperate in the posting of all required notifications relative to the use of hazardous substances on the property. Contractor to comply with NJ Law regarding the use or storage of hazardous substances in Schools. MSDS sheets shall be posted prior to product being delivered to site.***
17. ***Contractor, subcontractor, vender, etc. should enforce a full time no smoking or alcohol use policy for all employees during the entire course of the project. Any worker found violating these reflections, or being belligerent, will be subject to removal from the site at the sole discretion of Owner.***
18. ***Contractor shall be responsible to secure the site at the end of each workday by an effective means and maintain until all parties determine no longer required.***
19. ***For the safety of occupants, staff, and the public, all crane operation and lifting must be scheduled and coordinated with the Owner. Swinging of crane boom over occupied space will not be allowed. Contractor shall provide additional barricades and fencing around his crane at all times.***
20. ***Contractor must submit an acceptable OSHA compliant site specific written safety plan to the Architect, for review within fourteen (14) days from the notice to proceed or prior to mobilizing on site, whichever comes first. The written safety plan shall include (as applicable to their work) but is not limited to the following:***
    - Full time no smoking policy or alcohol use is allowed on the project. Any worker found violating these restrictions, or being belligerent, will be subject to removal from the site. (Contractors shall post required signs).
    - Full time hard hat policy (identifying hard hats shall be worn at all times).
    - Site specific emergency action plan with contractor phone numbers, active 24 hours a day, 7 days a week.
    - Competent on-site safety representative, named and active (Provide alternate)
    - Full time fall protection plan for exposures over 6'-0".
    - Job site signage plan (Perimeter fence warning signs posted 50'-0" o/c.
    - First aid and CPR provisions.
    - OSHA 200 log and Job Safety and Health Protection poster.
    - Daily clean up.
    - Hazard Communication Program with MSDS logged and maintained.
    - Hazard Communication program.
    - Daily diary of work, issues, and incident, etc.
    - GFI safety program.
    - Required safety clothes; Eye & ear protection, respirators, boots, belts, gloves etc. as appropriate to their work requirement.
    - Fire Extinguishers.
    - Removal guard rail and protection at material loading areas, 200lb force minimum requirement.
    - Daily inspection of tools and equipment; verify safety devises are operational.
    - Ladder usage plan.
    - Weekly tool box meetings, documented and signed by each employee
    - Temporary heat procedures.

21. ***Contractor shall maintain and submit a complete copy of the written safety plan, logs, diaries, plans and programs on site for the Owner.***

    The speed limit within the project property is 5MPH. Contractor employees operating vehicles in excess of the speed limit or in any otherwise unsafe manner will be directed to leave the site and not permitted to return.

AIA Document A201™ – 2017. Copyright © 1911, 1915, 1918, 1925, 1937, 1951, 1958, 1961, 1963, 1966, 1970, 1976, 1987, 1997, 2007 and 2017 by The American Institute of Architects. **All rights reserved. WARNING: This AIA® Document is protected by U.S. Copyright Law and International Treaties. Unauthorized reproduction or distribution of this AIA® Document, or any portion of it, may result in severe civil and criminal penalties, and will be prosecuted to the maximum extent possible under the law.** This draft was produced by AIA software at 09:54:27 on 07/24/2018 under Order No.9799823797 which expires on 01/19/2019, and is not for resale.
User Notes: (913728330)

§ 10.2 Safety of Persons and Property

§ 10.2.1 The Contractor shall take reasonable precautions for safety of, and shall provide reasonable protection to prevent damage, injury, or loss to

- **.1** employees on the Work and other persons who may be affected thereby;
- **.2** the Work and materials and equipment to be incorporated therein, whether in storage on or off the site, under care, custody, or control of the Contractor, a Subcontractor, or a Sub-subcontractor; and
- **.3** other property at the site or adjacent thereto, such as trees, shrubs, lawns, walks, pavements, roadways, structures, and utilities not designated for removal, relocation, or replacement in the course of construction. ***as well as any other real or personal property of the Owner***.
- **.4** ***The Contractor shall provide a third-party Insurance Safety Site Inspection Report monthly and remedy all issues promptly.***

§ 10.2.2 The Contractor shall comply with, and give notices required by applicable laws, statutes, ordinances, codes, rules and regulations, and lawful orders of public authorities, bearing on safety of persons or property or their protection from damage, injury, or loss.

§ 10.2.2.1Contractor shall comply with all regulations required by the Federal Occupational Safety and Health Act (OSHA).

§ 10.2.2.2 The Contractor shall conform to all applicable New Jersey Department of Environmental Protection regulations.

§ 10.2.2.3 Contractors must comply with Construction and Environmental Standards contained in Federal and State Regulations and other applicable laws.

§ 10.2.2.4 It is the Contractor's responsibility to determine the existence of potentially hazardous materials, including lead, and to protect his workmen and the work area.

§ 10.2.3 The Contractor shall implement, erect, and maintain, as required by existing conditions and performance of the Contract, reasonable safeguards for safety and protection, including posting danger signs and other warnings against hazards; promulgating safety regulations; and notifying the owners and users of adjacent sites and utilities of the safeguards.

§ 10.2.4 When use or storage of explosives or other hazardous materials or equipment, or unusual methods are necessary for execution of the Work, the Contractor shall exercise utmost care and carry on such activities under supervision of properly qualified personnel.

§ 10.2.5 The Contractor shall promptly remedy damage and loss (other than damage or loss insured under property insurance required by the Contract Documents) to property referred to in Sections 10.2.1.2 and 10.2.1.3 caused in whole or in part by the Contractor, a Subcontractor, a Sub-subcontractor, or anyone directly or indirectly employed by any of them, or by anyone for whose acts they may be liable and for which the Contractor is responsible under Sections 10.2.1.2 and 10.2.1.3. The Contractor may make a Claim for the cost to remedy the damage or loss to the extent such damage or loss is attributable to acts or omissions of the Owner or Architect or anyone directly or indirectly employed by either of them, or by anyone for whose acts either of them may be liable, and not attributable to the fault or negligence of the Contractor. The foregoing obligations of the Contractor are in addition to the Contractor's obligations under Section 3.18.

§ 10.2.6 The Contractor shall designate a responsible member of the Contractor's organization at the site whose duty shall be the prevention of accidents. This person shall be the Contractor's superintendent unless otherwise designated by the Contractor in writing to the Owner and Architect.

§ 10.2.7 The Contractor shall not permit any part of the construction or site to be loaded so as to cause damage or create an unsafe condition.

§ 10.2.8 Injury or Damage to Person or Property

If either party suffers injury or damage to person or property because of an act or omission of the other party, or of others for whose acts such party is legally responsible, notice of the injury or damage, whether or not insured, shall

AIA Document A201™ – 2017. Copyright © 1911, 1915, 1918, 1925, 1937, 1951, 1958, 1961, 1963, 1966, 1970, 1976, 1987, 1997, 2007 and 2017 by The American Institute of Architects. **All rights reserved. WARNING: This AIA® Document is protected by U.S. Copyright Law and International Treaties. Unauthorized reproduction or distribution of this AIA® Document, or any portion of it, may result in severe civil and criminal penalties, and will be prosecuted to the maximum extent possible under the law.** This draft was produced by AIA software at 09:54:27 on 07/24/2018 under Order No.9799823797 which expires on 01/19/2019, and is not for resale.
User Notes: (913728330)

be given to the other party within a reasonable time not exceeding 21 days after discovery. The notice shall provide sufficient detail to enable the other party to investigate the matter.

§ 10.2.9 The Contractor shall provide and maintain in good operating condition suitable and adequate fire protection equipment and shall comply with all reasonable recommendations regarding fire protection made by the representatives of the fire insurance company carrying insurance on the Work or by the local fire chief or fire marshal. The area within the site limits under the Contractor's control shall be kept orderly and clean, and all combustible rubbish shall be promptly removed from the site. Contractor will comply with all reasonable requests of the Owner with respect to additional security and protections required for work interfacing with School Operations. Safety is of utmost importance on this project and all issues relative to safety and protection of the School, Staff and Students will be treated as emergency needs and will not be subject to the 7-day notice requirements of Article 14.

§ 10.2.10 The Contractor shall remove snow or ice which may accumulate on the site within areas under his control which might result in damage or delay.

§ 10.2.11 The Contractor shall take all precautions necessary to prevent loss or damage caused by vandalism, theft, burglary, pilferage, or unexplained disappearance of property of the Owner and Contractor, whether or not forming part of the Work, located within those areas of the Project to which the Contractor has access. Whenever unattended, including nights and weekends, mobile equipment and operable machinery shall be kept locked and made inoperable and immovable.

§ 10.2.12 Neither the Owner nor the Architect shall be responsible for providing a safe working place for the Contractor, the Subcontractors or their employees, or any individual responsible to them for the work.

§ 10.2.13 The Contractor shall conform to requirements of OSHA, the Construction Safety Code of the State Department of Labor and those of the AGC Manual. The requirements of the New Jersey and Local Building Construction Codes shall apply where there are equal to or more restrictive than the requirements of the Federal Act.

§ 10.2.14 When all or a portion of the Work is suspended for any reason, the Contractor shall securely fasten down all coverings and protect the Work as necessary from injury or any cause.

§ 10.2.15 The Contractor shall promptly report in writing to the Owner and Architect all accidents arising out of or in connection with the Work which caused death, personal injury or property damage giving full details and statements of any witnesses. In addition, if death, serious personal injury or serious property damage is caused, the accident shall be reported immediately by telephone or messenger to the Owner and Architect.

§ 10.2.16 Contractor is required to follow and enforce the work rules set forth below. Failure to comply with or enforce any of these rules will be grounds for suspension and/or termination of this Contract:

- ***.1 No use of alcoholic beverages prior to or during working hours. Anyone found impaired after lunch will be escorted from the Project site.***
- ***.2 No use of illegal drugs or prescription medications which could induce drowsiness or otherwise impair perception or performance. Use of illegal drugs may result in prosecution to the fullest extent of the law. Any warning associated with use of prescription drugs must be complied with, particularly warning against operation of machinery and equipment.***
- ***.3 No horseplay or rough-housing will be allowed.***
- ***.4 No sexual, racial, or ethnic harassment, or similar conduct will be tolerated.***
- ***.5 All employees shall use proper sanitation habits including use of toilet facilities and garbage cans.***
- ***.6 All employees shall dress in clothing appropriate for the work they are to perform. All personnel are to wear hardhats, safety shoes, glasses, gloves, masks or respirators, noise protection devices, and other protective clothing and equipment as required by OSHA standards.***
- ***.7 All equipment is to be property stored and/or secured at the end of the work day or if it is to remain idle for greater than one hour.***
- ***.8 All personnel are to be made aware of the availability of Material Safety Data Sheets for materials used at the Project site. This information is available from the Contractor using the***

AIA Document A201™ – 2017. Copyright © 1911, 1915, 1918, 1925, 1937, 1951, 1958, 1961, 1963, 1966, 1970, 1976, 1987, 1997, 2007 and 2017 by The American Institute of Architects. **All rights reserved. WARNING: This AIA® Document is protected by U.S. Copyright Law and International Treaties. Unauthorized reproduction or distribution of this AIA® Document, or any portion of it, may result in severe civil and criminal penalties, and will be prosecuted to the maximum extent possible under the law.** This draft was produced by AIA software at 09:54:27 on 07/24/2018 under Order No.9799823797 which expires on 01/19/2019, and is not for resale.
User Notes: (913728330)

product. The Contractor shall maintain a copy of all MSDS forms at the construction site office for all personnel to review.

§ 10.3 Hazardous Materials and Substances

§ 10.3.1 The Contractor is responsible for compliance with any requirements included in the Contract Documents regarding hazardous materials or substances. If the Contractor encounters a hazardous material or substance not addressed in the Contract Documents and if reasonable precautions will be inadequate to prevent foreseeable bodily injury or death to persons resulting from a material or substance, including but not limited to asbestos or polychlorinated biphenyl (PCB), encountered on the site by the Contractor, the Contractor shall, upon recognizing the condition, immediately stop Work in the affected area and notify the Owner and Architect of the condition.

§ 10.3.2 Upon receipt of the Contractor's notice, the Owner shall obtain the services of a licensed laboratory to verify the presence or absence of the material or substance reported by the Contractor and, in the event such material or substance is found to be present, to cause it to be rendered harmless. Unless otherwise required by the Contract Documents, the Owner shall furnish in writing to the Contractor and Architect the names and qualifications of persons or entities who are to perform tests verifying the presence or absence of the material or substance or who are to perform the task of removal or safe containment of the material or substance. The Contractor and the Architect will promptly reply to the Owner in writing stating whether or not either has reasonable objection to the persons or entities proposed by the Owner. If either the Contractor or Architect has an objection to a person or entity proposed by the Owner, the Owner shall propose another to whom the Contractor and the Architect have no reasonable objection. When the material or substance has been rendered harmless, Work in the affected area shall resume upon written agreement of the Owner and Contractor. By Change Order, the Contract Time shall be extended appropriately and the Contract Sum shall be increased by the amount of the Contractor's reasonable additional costs of shutdown, delay, and start-up ***adjustments shall be accomplished as provided in Article 7***.

~~**§ 10.3.3** To the fullest extent permitted by law, the Owner shall indemnify and hold harmless the Contractor, Subcontractors, Architect, Architect's consultants, and agents and employees of any of them from and against claims, damages, losses, and expenses, including but not limited to attorneys' fees, arising out of or resulting from performance of the Work in the affected area if in fact the material or substance presents the risk of bodily injury or death as described in Section 10.3.1 and has not been rendered harmless, provided that such claim, damage, loss, or expense is attributable to bodily injury, sickness, disease or death, or to injury to or destruction of tangible property (other than the Work itself), except to the extent that such damage, loss, or expense is due to the fault or negligence of the party seeking indemnity.~~

~~**§ 10.3.4** The Owner shall not be responsible under this Section 10.3 for hazardous materials or substances the Contractor brings to the site unless such materials or substances are required by the Contract Documents. The Owner shall be responsible for hazardous materials or substances required by the Contract Documents, except to the extent of the Contractor's fault or negligence in the use and handling of such materials or substances.~~

§ 10.3.5 The Contractor shall reimburse the Owner for the cost and expense the Owner incurs (1) for remediation of hazardous materials or substances the Contractor brings to the site and negligently handles, or (2) where the Contractor fails to perform its obligations under Section 10.3.1, except to the extent that the cost and expense are due to the Owner's fault or negligence.

§ 10.3.6 If, without negligence on the part of the Contractor, the Contractor is held liable by a government agency for the cost of remediation of a hazardous material or substance solely by reason of performing Work as required by the Contract Documents, the Owner shall reimburse the Contractor for all cost and expense thereby incurred.

§ ***10.3.7 The Contractor shall submit to the Owner all MSDS sheets and shall cooperate in the posting of all required notifications relative to the use of hazardous materials on school property. Contractor to comply with NJ Law regarding the use or storage of hazardous materials in Schools.***

§ 10.4 Emergencies

In an emergency affecting safety of persons or property, the Contractor shall act, at the Contractor's discretion, to prevent threatened damage, injury, or loss. Additional compensation or extension of time claimed by the Contractor on account of an emergency shall be determined as provided in Article 15 and Article 7.

AIA Document A201™ – 2017. Copyright © 1911, 1915, 1918, 1925, 1937, 1951, 1958, 1961, 1963, 1966, 1970, 1976, 1987, 1997, 2007 and 2017 by The American Institute of Architects. **All rights reserved. WARNING: This AIA® Document is protected by U.S. Copyright Law and International Treaties. Unauthorized reproduction or distribution of this AIA® Document, or any portion of it, may result in severe civil and criminal penalties, and will be prosecuted to the maximum extent possible under the law.** This draft was produced by AIA software at 09:54:27 on 07/24/2018 under Order No.9799823797 which expires on 01/19/2019, and is not for resale.
User Notes: (913728330)

§ 10.4.1 – EMERGENCY/SAFETY PLAN

All parties involved in the construction process should be aware of emergency services that may be required during the construction process.

Contractor shall establish the site-specific Emergency Action Plan and, after approval by the owner, and local authorities, shall display at various locations at the site.

In case of an accident, emergency, or injury on the job site, the Contractor shall immediately follow the Site-Specific Emergency Action Plan. Following the incident, the Contractor shall submit to the Owner a complete written accident report detailing the circumstances which caused the accident, extent of injuries, damage to the building, time of accident, corrective action required, etc.

ARTICLE 11 INSURANCE AND BONDS

§ 11.1 Contractor's Insurance and Bonds

All ***insurance provisions shall be confirmed with Owner's Insurance Agent.***

§ 11.1.1 The Contractor shall purchase and maintain insurance of the types and limits of liability, containing the endorsements, and subject to the terms and conditions, as described in the Agreement or elsewhere in the Contract Documents. The Contractor shall purchase and maintain the required insurance from an insurance company or insurance companies lawfully authorized to issue insurance in the jurisdiction where the Project is located. The Owner, Architect, and Architect's consultants, ***the State of New Jersey, the New Jersey Department of Education, New Jersey Schools Development Authority and the New Jersey Economic Development Authority*** shall be named as additional insureds under the Contractor's commercial general liability policy or as otherwise described in the Contract Documents.

§11.11..2 Contractor shall, without in any way altering Contractor's liability under the Contract or applicable law, obtain, pay for and maintain insurance for the coverages and amounts of coverage not less than those set forth below in the Schedule of Insurance Coverages and shall provide to Owner certificates issued by insurance companies satisfactory to Owner to evidence such coverage no later than 7 days of the date of the execution of this Contract and prior to any personnel or equipment being brought onto and/or before any work commences at the job site. The coverage afforded under any insurance obtained pursuant to this paragraph shall be primary to any valid and collectible insurance carried separately by any of the indemnities. Such certificates shall provide that there shall be no cancellation, non-renewal or material change of such coverage without thirty (30) days prior written notice to Owner. In the event of any failure by Contractor to comply with the provisions of this Article 11, Owner may, at its option, on notice to Contractor, suspend the Contract for cause until there is full compliance with this Article 11 and / or terminate the Contract for cause. Alternatively, Owner may purchase such insurance at Contractor's expense, provided that Owner shall have no obligation to do so, and if Owner shall do so, Contractor shall not be relieved of or excused from the obligation to obtain and maintain such insurance amounts and coverages. Contractor shall provide to Owner a copy of any and all applicable insurance policies. The Owner; LAN Associates Engineering, Planning, Architecture, Surveying, Inc.; Environmental Resolutions, inc.;, the State of New Jersey; the New Jersey Department of Education; New Jersey Schools Development Authority and the New Jersey Economic Development Authority shall be named as an additional insured on a primary and non-contributory basis on all Insurance Policies to be provided by the Contractor.

§ 11.1.1.3 Schedule of Insurance Coverages

.1	*Commercial General Liability, Each Occurrence*		
	a.	*Each Occurrence:*	*$ 1,000,000.00*
	b.	*Damage to Rented Premises:*	*$ 300,000.00*
	c.	*Medical Expense (Any one person):*	*$ 15,000.00*
	d.	*Personal & Adv Injury:*	*$ 1,000,000.00*
	e.	*General Aggregate:*	*$ 2,000,000.00*
	f.	*Products – Comp/Op Agg:*	*$ 1,000,000.00*
.2	*Excess Umbrella Liability:*		*$ 5,000,000.00*

AIA Document A201™ – 2017. Copyright © 1911, 1915, 1918, 1925, 1937, 1951, 1958, 1961, 1963, 1966, 1970, 1976, 1987, 1997, 2007 and 2017 by The American Institute of Architects. **All rights reserved. WARNING: This AIA® Document is protected by U.S. Copyright Law and International Treaties. Unauthorized reproduction or distribution of this AIA® Document, or any portion of it, may result in severe civil and criminal penalties, and will be prosecuted to the maximum extent possible under the law.** This draft was produced by AIA software at 09:54:27 on 07/24/2018 under Order No.9799823797 which expires on 01/19/2019, and is not for resale.
User Notes: (913728330)

.3 Automobile Liability: (Hired autos, scheduled autos, non-owned autos)
a. Combined Single Limit (each accident): $ 1,000,000.00

.4 Workers Compensation and Employers Liability:
a. WC Statutory Limits:
1. E.L. Each Accident: $ 1,000,000.00
2. E.L. Disease – Each Employee: $ 1,000,000.00
3. E.L. Disease – Policy Limit: $ 1,000,000.00

.5 Builder's Risk Insurance: The Contractor shall provide Builder's Risk Insurance for all risk of physical loss or damage to the property described hereunder in an amount equal to the Total Project Value, and furnished under Construction Contracts for the School Facilities Project; excepting excavations, foundations and other structures customarily excluded by such insurance. The Policy shall name the Owner, State of New Jersey, the New Jersey Department of Education, New Jersey Schools Development Authority, and the New Jersey Economic Development Authority as loss payee as their interests may appear on a primary and non-contributory basis. The Builders Risk Policy is to include coverage for the perils of Earthquake, Flood, Full Windstorm, Equipment Breakdown and Theft (excluding employee theft), contain an endorsement allowing permission to occupy and include coverage for both transit and offsite storage. The policy is also to include all contractors, subcontractors and sub-subcontractors as well as the Owner, State of New Jersey, the New Jersey Department of Education, New Jersey Schools Development Authority, and the New Jersey Economic Development Authority, LAN Associates as Additional Named Insureds on a primary and non-contributory basis. The contractor and all subcontractors are responsible for all policy deductibles and uninsured or underinsured losses.

.6 The Policy shall name the following as Additional Insured:
The Owner; LAN Associates Engineering, Planning, Architecture, Surveying, Inc.; the State of New Jersey; and the New Jersey Department of Education as additional insureds on a primary and non-contributory basis

.7 Contractual liability insurance as applicable to the Contractor's obligations under Paragraph 3.18 of the AIA General Conditions.

.8 Workers' Compensation Insurance of not less than statutory limits.

.9 Completed Operations Insurance written to the limits specified for liability insurance specified under subparagraph .1 above. Coverage shall be required from the date of the start of Beneficial Occupancy until one year after the issuance date of Final Certificate for Payment.

.10 Certificates of insurance must be submitted on the ACORD Form, Certificate of Insurance. Contractor's ACORD Certificate of Insurance must state "Contractual Liability Included" or it will be rejected.

.11 The Contractor shall either

.1 require each of his subcontractors to procure and to maintain during the life of their subcontracts, Subcontractor's Public Liability and Property Damage, of the type and in the same amounts as specified in the preceding paragraph; or

.2 insure the activities of their subcontractors under their respective policies.

§ 11.1.2 The Contractor shall provide surety bonds ***for the entire contract amount*** of the types, for such penal sums, and subject to such terms and conditions as required by the Contract Documents. The Contractor shall purchase and maintain the required bonds from a company or companies lawfully authorized to issue surety bonds in the jurisdiction where the Project is located.

AIA Document A201™ – 2017. Copyright © 1911, 1915, 1918, 1925, 1937, 1951, 1958, 1961, 1963, 1966, 1970, 1976, 1987, 1997, 2007 and 2017 by The American Institute of Architects. **All rights reserved. WARNING: This AIA® Document is protected by U.S. Copyright Law and International Treaties. Unauthorized reproduction or distribution of this AIA® Document, or any portion of it, may result in severe civil and criminal penalties, and will be prosecuted to the maximum extent possible under the law.** This draft was produced by AIA software at 09:54:27 on 07/24/2018 under Order No.9799823797 which expires on 01/19/2019, and is not for resale.
User Notes: (913728330)

§ 11.1.3 Upon the request of any person or entity appearing to be a potential beneficiary of bonds covering payment of obligations arising under the Contract, the Contractor shall promptly furnish a copy of the bonds or shall authorize a copy to be furnished.

§ 11.1.4 Notice of Cancellation or Expiration of Contractor's Required Insurance. Within three (3) business days of the date the Contractor becomes aware of an impending or actual cancellation or expiration of any insurance required by the Contract Documents, the Contractor shall provide notice to the Owner of such impending or actual cancellation or expiration. Upon receipt of notice from the Contractor, the Owner shall, unless the lapse in coverage arises from an act or omission of the Owner, have the right to stop the Work until the lapse in coverage has been cured by the procurement of replacement coverage by the Contractor. The furnishing of notice by the Contractor shall not relieve the Contractor of any contractual obligation to provide any required coverage.

§ 11.1.5 Contractor shall furnish a performance bond and labor and material payment bond meeting all statutory requirements of the State of New Jersey in form and substance satisfactory to the Owner and without limitation complying with the following specific requirements:

.1 ***Except as otherwise required by statute, the form and substance of such bonds shall be satisfactory to the Owner in the Owner's sole judgment;***

.2 ***The bonds shall be executed by a responsible surety licensed in the State of New Jersey Best's rating of no less than A-/X and shall remain in effect for a period of not less than two years following the date of final acceptance or the time required to resolve any items of incomplete or inadequate work and the payment of any disputed amounts, whichever time period is longer;***

.3 ***The performance bond and the labor and material payment bond shall each be in an amount equal to the Contract Sum;***

.4 ***The Contractor shall require the attorney-in-fact who executes the required bonds on behalf of the surety to affix thereto a certified and current copy of his power of attorney indicating the monetary limit of such power;***

.5 ***Any bond under this Paragraph 11.1.5 must display the surety's bond number. A rider including the following provisions shall be attached to each bond:***

(1) Surety hereby agrees that it consents to and waives notice of any addition, alteration, omission, change or other modification of the Contract Documents which singularly or in the aggregate equals or is less than 20% of the Contract Sum. Any other alterations, change, extension of time or other modification of the Contract Documents or a forbearance on the part of either the Owner or the Contractor to the other shall not release the surety of its obligations hereunder and notice to surety of such matter is hereby waived.

(2) Surety further agrees that in the event of any default by the Owner in the performance of the Owner's obligations to the Contractor under the Contract, the Contractor or surety shall cause written notice of such default (specifying said default in writing) to be given to the Owner, and the Owner shall have 30 days after receipt of such notice within which to cure such default of such additional reasonable time as may be required if the nature of such default is such that it cannot be cured within 30 days. Such notice of default shall be sent by certified or registered U.S. mail, return receipt requested, first class postage prepaid to the Owner.

§ 11.1.6 If any of the foregoing insurance coverages are required to remain in force after final payment, including, but not limited to coverage for completed operations, an additional certificate evidencing continuation of such coverage shall be submitted with the Final Application for Payment.

§ 11.1.7 In no event shall any failure of the Owner to receive certificates of policies required under Paragraph 11.1 or to demand receipt of such certificates prior to the Contractor commencing Work be construed as a waiver of the Owner or the Architect of the Contractor's obligations to obtain insurance pursuant to this Article 11. The obligation to procure and maintain any insurance required by this Article 11 is a separate responsibility of the Contractor and independent of the duty to furnish a certificate of such insurance policies.

§ 11.1.8 If the Contractor fails to purchase and maintain or require to be purchased and maintained any insurance required under this Article 11, the Owner may, but shall not be obligated to, upon 5 days written notice to the Contractor, purchase such insurance on behalf of the Contractor and shall be entitled to deduct said cost from the Contractor's Contract Sum.

AIA Document A201™ – 2017. Copyright © 1911, 1915, 1918, 1925, 1937, 1951, 1958, 1961, 1963, 1966, 1970, 1976, 1987, 1997, 2007 and 2017 by The American Institute of Architects. **All rights reserved. WARNING: This AIA® Document is protected by U.S. Copyright Law and International Treaties. Unauthorized reproduction or distribution of this AIA® Document, or any portion of it, may result in severe civil and criminal penalties, and will be prosecuted to the maximum extent possible under the law.** This draft was produced by AIA software at 09:54:27 on 07/24/2018 under Order No.9799823797 which expires on 01/19/2019, and is not for resale.
User Notes: (913728330)

§ 11.1.9 When any required insurance due to the attainment of a normal expiration date or renewal date shall expire the Contractor shall supply the Owner with certificates of insurance and amendatory riders or endorsements that clearly evidence the continuation of all coverage in the same manner, limits of protection and scope as was provided by the previous policy. In the event, any renewal or replacement policy for whatever reason obtained or required is written by a carrier other than that with whom the coverage was previously placed or the subsequent policy differs in any way from the previous policy, the Contractor shall also furnish replacement policy unless the Owner provides the Contractor with prior written consent to submit only a certificate of insurance for any such policy. All renewal and or replacement policies shall be in form and substance satisfactory to the Owner and written by carriers acceptable to the Owner.

§ 11.1.10 The Contractor shall cause each subcontractor to (1) procure insurance in the amounts set for in Article 11 and (2) name the indemnities under Paragraph 3.18 as additional insureds under the subcontractor's comprehensive general liability policy. The additional insured endorsement included on the subcontractor's comprehensive general liability policy shall state that coverage is afforded the additional insureds with respect to claims arising out of operations performed by or on behalf of the Contractor. If the additional insureds have other insurance which is applicable to the claims, such other insurance shall be on an excess or contingent basis. The amount of the insurance liability under this insurance policy shall not be reduced by the existence of such other insurance.

§ 11.1.11 Property insurance provided by the Owner shall not cover any tools, apparatus, machinery, scaffolding, hoists, forms, staging, shoring, or other similar items commonly referred to as construction equipment which may be on the site and the capital value of which is not included in the work. The Contractor shall make its own arrangements for any insurance it might require on such construction requirement. Any such policy obtained by the Contractor under this Paragraph 11.4.7 shall include a waiver of subrogation.

§ 11.1.12 The Contractor may carry whatever additional insurance he deems necessary to protect himself against hazards not covered for theft, collapse, water damage, materials and equipment stored on the site, and for materials and equipment stored off site, and against loss of owned or rented capital equipment and tools owned by mechanics or any tools, equipment, scaffolding, stagings, towers and forms owned or rented by the Contractor, the capital value of which is not included in the cost of the Work.

§ 11.1.13 All insurance coverage procured by the Contractor shall be provided by insurance companies having policy holder ratings no lower than "A-" and financial rating no lower than, "X" in the Best's Insurance guide, latest edition in effect as the date of the Contract and subsequently in effect at the time of the renewal of the policies required by the Contract Documents.

§ 11.1.14 If the Owner or the Contractor is damaged by the failure of the other party to purchase or maintain insurance required under Article 11, then the party who failed to purchase or maintain the insurance shall bear all reasonable costs (including attorney's fees and court and settlement costs) properly attributable thereto.

§ 11.1.15 The Contractors must remove all "X, C & U" exclusions from their policies.

§ 11.2 Owner's Insurance

§ 11.2.1 The Owner shall purchase and maintain insurance of the types and limits of liability, containing the endorsements, and subject to the terms and conditions, as described in the Agreement or elsewhere in the Contract Documents. The Owner shall purchase and maintain the required insurance from an insurance company or insurance companies lawfully authorized to issue insurance in the jurisdiction where the Project is located.

§ 11.2.2 Failure to Purchase Required Property Insurance. If the Owner fails to purchase and maintain the required property insurance, with all of the coverages and in the amounts described in the Agreement or elsewhere in the Contract Documents, the Owner shall inform the Contractor in writing prior to commencement of the Work. Upon receipt of notice from the Owner, the Contractor may delay commencement of the Work and may obtain insurance that will protect the interests of the Contractor, Subcontractors, and Sub-Subcontractors in the Work. When the failure to provide coverage has been cured or resolved, the Contract Sum and Contract Time shall be equitably adjusted. In the event the Owner fails to procure coverage, the Owner waives all rights against the Contractor, Subcontractors, and Sub-subcontractors to the extent the loss to the Owner would have been covered by the insurance to have been procured by the Owner. The cost of the insurance shall be charged to the Owner by a Change

AIA Document A201™ – 2017. Copyright © 1911, 1915, 1918, 1925, 1937, 1951, 1958, 1961, 1963, 1966, 1970, 1976, 1987, 1997, 2007 and 2017 by The American Institute of Architects. **All rights reserved. WARNING: This AIA® Document is protected by U.S. Copyright Law and International Treaties. Unauthorized reproduction or distribution of this AIA® Document, or any portion of it, may result in severe civil and criminal penalties, and will be prosecuted to the maximum extent possible under the law.** This draft was produced by AIA software at 09:54:27 on 07/24/2018 under Order No.9799823797 which expires on 01/19/2019, and is not for resale.
User Notes: (913728330)

Order. If the Owner does not provide written notice, and the Contractor is damaged by the failure or neglect of the Owner to purchase or maintain the required insurance, the Owner shall reimburse the Contractor for all reasonable costs and damages attributable thereto.

§ 11.2.3 Notice of Cancellation or Expiration of Owner's Required Property Insurance. Within three (3) business days of the date the Owner becomes aware of an impending or actual cancellation or expiration of any property insurance required by the Contract Documents, the Owner shall provide notice to the Contractor of such impending or actual cancellation or expiration. Unless the lapse in coverage arises from an act or omission of the Contractor: (1) the Contractor, upon receipt of notice from the Owner, shall have the right to stop the Work until the lapse in coverage has been cured by the procurement of replacement coverage by either the Owner or the Contractor; (2) the Contract Time and Contract Sum shall be equitably adjusted; and (3) the Owner waives all rights against the Contractor, Subcontractors, and Sub-subcontractors to the extent any loss to the Owner would have been covered by the insurance had it not expired or been cancelled. If the Contractor purchases replacement coverage, the cost of the insurance shall be charged to the Owner by an appropriate Change Order. The furnishing of notice by the Owner shall not relieve the Owner of any contractual obligation to provide required insurance.

ARTICLE 12 UNCOVERING AND CORRECTION OF WORK

§ 12.1 Uncovering of Work

§ 12.1.1 If a portion of the Work is covered contrary to the Architect's request or to requirements specifically expressed in the Contract Documents, it must, if requested in writing by the Architect, be uncovered for the Architect's examination and be replaced at the Contractor's expense without change in the Contract Time ***or Contract Sum***.

§ 12.1.2 If a portion of the Work has been covered that the Architect has not specifically requested to examine prior to its being covered, the Architect may request to see such Work and it shall be uncovered by the Contractor. If such Work is in accordance with the Contract Documents, the Contractor shall be entitled to an equitable adjustment to the Contract Sum and Contract Time as may be appropriate. If such Work is not in accordance with the Contract Documents, the costs of uncovering the Work, and the cost of correction, shall be at the Contractor's expense.

§ 12.2 Correction of Work

§ 12.2.1 Before Substantial Completion

The Contractor shall promptly correct Work rejected by the Architect or failing to conform to the requirements of the Contract Documents, discovered before Substantial Completion and whether or not fabricated, installed or completed. Costs of correcting such rejected Work, including additional testing and inspections, the cost of uncovering and replacement, and compensation for the Architect's services and expenses made necessary thereby, shall be at the Contractor's expense. ***If prior to the date of Substantial Completion, the Contractor, a subcontractor or anyone for whom either is responsible, uses or damages any portion of the Work, including without limitation, mechanical, electrical, plumbing and other building systems, machinery, equipment or other mechanical device, the Contractor shall cause each such item to be restored to "like new condition" at no expense to the Owner.***

§ 12.2.2 After Substantial Completion

§ 12.2.2.1 In addition to the Contractor's obligations under Section 3.5, if, within ~~one year~~ ***two (2) years*** after the date of ~~Substantial Completion~~ ***Final Acceptance*** of the Work or designated portion thereof or after the date for commencement of warranties established under Section 9.9.1, or by terms of any applicable special warranty required by the Contract Documents, any of the Work is found to be not in accordance with the requirements of the Contract Documents, the Contractor shall correct it promptly after receipt of notice from the Owner to do so, unless the Owner has previously given the Contractor a written acceptance of such condition. The Owner shall give such notice promptly after discovery of the condition.. If the Contractor fails to correct nonconforming Work within a reasonable time during that period after receipt of notice from the Owner or Architect, the Owner may correct it in accordance with Section 2.5.

- ***.1 The obligations under Item 12.2 shall cover any repairs and replacement to any part of the Work or other property caused by the defective Work.***
- ***.2 Upon completion of any work under or pursuant to Item 12.2., the two-year correction period in connection with the work requiring correction shall be renewed and recommenced.***

AIA Document A201™ – 2017. Copyright © 1911, 1915, 1918, 1925, 1937, 1951, 1958, 1961, 1963, 1966, 1970, 1976, 1987, 1997, 2007 and 2017 by The American Institute of Architects. **All rights reserved. WARNING: This AIA® Document is protected by U.S. Copyright Law and International Treaties. Unauthorized reproduction or distribution of this AIA® Document, or any portion of it, may result in severe civil and criminal penalties, and will be prosecuted to the maximum extent possible under the law.** This draft was produced by AIA software at 09:54:27 on 07/24/2018 under Order No.9799823797 which expires on 01/19/2019, and is not for resale.
User Notes: (913728330)

§ 12.2.2.2 The ~~one year~~ ***two-year*** period for correction of Work shall be extended with respect to portions of Work first performed after ~~Substantial Completion~~ ***Final Acceptance*** by the period of time between ~~Substantial Completion~~ ***Final Acceptance*** and the actual completion of that portion of the Work.

§ 12.2.2.3 The ~~one year~~ ***two-year*** period for correction of Work shall not be extended by corrective Work performed by the Contractor pursuant to this Section 12.2.

§ 12.2.3 The Contractor shall remove from the site portions of the Work that are not in accordance with the requirements of the Contract Documents and are neither corrected by the Contractor nor accepted by the Owner.

§ 12.2.4 The Contractor shall bear the cost of correcting destroyed or damaged construction of the Owner or Separate Contractors, whether completed or partially completed, caused by the Contractor's correction or removal of Work that is not in accordance with the requirements of the Contract Documents.

§ 12.2.5 Nothing contained in this Section 12.2 shall be construed to establish a period of limitation with respect to other obligations the Contractor has under the Contract Documents. Establishment of the one-year period for correction of Work as described in Section 12.2.2 relates only to the specific obligation of the Contractor to correct the Work, and has no relationship to the time within which the obligation to comply with the Contract Documents may be sought to be enforced, nor to the time within which proceedings may be commenced to establish the Contractor's liability with respect to the Contractor's obligations other than specifically to correct the Work.

§ 12.3 Acceptance of Nonconforming Work

If the Owner prefers to accept Work that is not in accordance with the requirements of the Contract Documents, the Owner may do so instead of requiring its removal and correction, in which case the Contract Sum will be reduced as appropriate and equitable. Such adjustment shall be effected whether or not final payment has been made. ***This paragraph relates exclusively to the knowing acceptance of nonconforming work by the Owner. It has no applicability to work accepted by the Owner or Architect without the knowledge that such work fails to conform to the requirements of the Contract Documents.***

§ 12.3.1 The Contractor and its Surety guarantee to make good, repair and/or correct, at no cost or expense to the Owner, any and all latent defects hereafter discovered, provided only that notice in writing, shall be given by the Owner to the contractor within two years of the discovery of such defects.

.1 This obligation shall survive the termination of any or all other obligation or obligations under the contract Documents and it is agreed by the Contractor and its Surety that in the event the Owner is required to bring suit under this provision against the Contractor or its Surety to enforce this obligation, the contractor and its Surety hereby waive any defense of the status of limitations.

ARTICLE 13 MISCELLANEOUS PROVISIONS

§ 13.1 Governing Law

The Contract shall be governed by the law of the place where the Project is located.

§ 13.2 Successors and Assigns

§ 13.2.1 The Owner and Contractor respectively bind themselves, their partners, successors, assigns, and legal representatives to covenants, agreements, and obligations contained in the Contract Documents. Except as provided in Section 13.2.2, neither party to the Contract shall assign the Contract as a whole without written consent of the other. If either party attempts to make an assignment without such consent, that party shall nevertheless remain legally responsible for all obligations under the Contract.

§ 13.2.2 The Owner may, without consent of the Contractor, assign the Contract to a lender providing construction financing for the Project, if the lender assumes the Owner's rights and obligations under the Contract Documents. The Contractor shall execute all consents reasonably required to facilitate the assignment.

§ 13.3 Rights and Remedies

§ 13.3.1 Duties and obligations imposed by the Contract Documents and rights and remedies available thereunder shall be in addition to and not a limitation of duties, obligations, rights, and remedies otherwise imposed or available by law.

AIA Document A201™ – 2017. Copyright © 1911, 1915, 1918, 1925, 1937, 1951, 1958, 1961, 1963, 1966, 1970, 1976, 1987, 1997, 2007 and 2017 by The American Institute of Architects. **All rights reserved. WARNING: This AIA® Document is protected by U.S. Copyright Law and International Treaties. Unauthorized reproduction or distribution of this AIA® Document, or any portion of it, may result in severe civil and criminal penalties, and will be prosecuted to the maximum extent possible under the law.** This draft was produced by AIA software at 09:54:27 on 07/24/2018 under Order No.9799823797 which expires on 01/19/2019, and is not for resale.
User Notes: (913728330)

§ 13.3.2 No action or failure to act by the Owner, Architect, or Contractor shall constitute a waiver of a right or duty afforded them under the Contract, nor shall such action or failure to act constitute approval of or acquiescence in a breach thereunder, except as may be specifically agreed upon in writing.

§ 13.4 Tests and Inspections

§ 13.4.1 ***The Owner shall provide and contract for "structural tests and special inspections" as required by the NJ DCA Bulletin 03-5. The Contractor shall coordinate, schedule, and provide on-site supervision and man-power to facilitate the testing. All other Tests, inspections and approvals of portions of the Work shall be made as required by the Contract Documents and by applicable laws, statutes, ordinances, codes, rules and regulations or lawful orders of public authorities. Unless otherwise provided, the Contractor shall make arrangements for such tests, inspections and approvals with an independent testing laboratory or entity acceptable to the Owner, or with the appropriate public authority, and shall bear all related costs of tests, inspections and approvals. The Contractor shall give the Architect timely notice of when and where tests and inspections are to be made so that the Architect may be present for such procedures. The Owner shall bear costs of (1) tests, inspections or approvals that do not become requirements until after bids are received or negotiations concluded, and (2) tests, inspections or approvals where building codes or applicable laws or regulations prohibit the Owner from delegating their cost to the Contractor. The Architect, Owner and Contractor shall be afforded a reasonable opportunity to attend, observe, and witness all inspections and tests of the Work. The Architect or Owner may at any time request and receive from the Contractor satisfactory evidence that materials, supplies or equipment are in conformance with the Contract Documents. The Conduct of any inspection of test and the receipt of any approval shall not operate to relieve the Contractor from its obligations under the Contract Documents unless specifically so stated by Owner in writing.***

§ 13.4.2 If the Architect, Owner, or public authorities having jurisdiction determine that portions of the Work require additional testing, inspection, or approval not included under Section 13.4.1, the Architect will, upon written authorization from the Owner, instruct the Contractor to make arrangements for such additional testing, inspection, or approval, by an entity acceptable to the Owner, and the Contractor shall give timely notice to the Architect of when and where tests and inspections are to be made so that the Architect may be present for such procedures. Such costs, except as provided in Section 13.4.3, shall be at the Owner's expense.

§ 13.4.3 If procedures for testing, inspection, or approval under Sections 13.4.1 and 13.4.2 reveal failure of the portions of the Work to comply with requirements established by the Contract Documents, all costs made necessary by such failure, including those of repeated procedures and compensation for the Architect's services and expenses, shall be at the Contractor's expense. ***The Contractor also agrees that the cost of testing services required for the convenience of the Contractor in his scheduling and performance of the Work and the cost of testing services related to remedial operations performed to correct deficiencies in the Work shall be borne by the Contractor.***

§ 13.4.4 Required certificates of testing, inspection, or approval shall, unless otherwise required by the Contract Documents, be secured by the Contractor and promptly delivered to the Architect.

§ 13.4.5 If the Architect is to observe tests, inspections, or approvals required by the Contract Documents, the Architect will do so promptly and, where practicable, at the normal place of testing.

§ 13.4.6 Tests or inspections conducted pursuant to the Contract Documents shall be made promptly to avoid unreasonable delay in the Work.

§ 13.5.1. The Contractor shall not be entitled to any payment of interest for any reason, action or inaction by the Architect or the Owner unless required by law.

§ 13.5.2 Any payments withheld for time delays, faulty materials, or workmanship, shall not bear interest for period of delay or non-acceptance.

§ 13.6 WRITTEN NOTICE

Written notice shall be deemed to have been duly served if delivered in person to the individual, to a member of the firm or entity, or to an officer of the corporation for which it was intended; or if delivered at, or sent by registered or certified mail or by courier service providing proof of delivery to, the last business address known to the party giving notice.

AIA Document A201™ – 2017. Copyright © 1911, 1915, 1918, 1925, 1937, 1951, 1958, 1961, 1963, 1966, 1970, 1976, 1987, 1997, 2007 and 2017 by The American Institute of Architects. **All rights reserved. WARNING: This AIA® Document is protected by U.S. Copyright Law and International Treaties. Unauthorized reproduction or distribution of this AIA® Document, or any portion of it, may result in severe civil and criminal penalties, and will be prosecuted to the maximum extent possible under the law.** This draft was produced by AIA software at 09:54:27 on 07/24/2018 under Order No.9799823797 which expires on 01/19/2019, and is not for resale.
User Notes: (913728330)

ARTICLE 14 TERMINATION OR SUSPENSION OF THE CONTRACT

§ 14.1 Termination by the Contractor

§ 14.1.1 The Contractor may terminate the Contract ***in the manner provided in Subparagraph 14.1.2 if repeated suspensions, delays or interruptions by the Owner as described in Paragraph 14.3 constitute in the aggregate more than 100% of the total number of days scheduled for completion or 120 days in any 365-day period, whichever is less, or*** if ***all*** the Work is ***entirely*** stopped for a ***continuous*** period of ~~30~~ ***60*** consecutive days through no act or fault of the Contractor, a Subcontractor, a Sub-subcontractor, their agents or employees, or any other persons or entities performing portions of the Work, for any of the following reasons:

.1 Issuance of an order of a court or other public authority having jurisdiction that requires all Work to be stopped;

.2 An act of government, such as a declaration of national emergency, that requires all Work to be stopped;

.3 Because the Architect has not issued a Certificate for Payment and has not notified the Contractor of the reason for withholding certification as provided in Section 9.4.1, or because the Owner has not made payment on a Certificate for Payment ***(without cause)*** within the time stated in the Contract Documents; or

§ 14.1.2 ***If one of the above reasons exist, the Contractor may, upon fourteen (14) days written notice to the Owner and Architect, terminate the Contract, unless this reason is cured prior to the expiration of the notice, and recover from the Owner payment of work properly executed in accordance with the Contract Documents (the basis for such payment shall be as provided in the Contract) and for payment for cost directly related to work thereafter performed by Contractor in terminating such work including reasonable demobilization and cancellation charges provided said work is authorized in advance by Architect and Owner.***

§ 14.1.3 ***The Owner shall not be responsible for damages for loss of anticipated profits on work not performed on account of any termination described in Subparagraph 14.1.1 and 14.1.2.***

§ 14.1.4 If the Work is stopped for a period of 60 consecutive days through no act or fault of the Contractor, a Subcontractor, a Sub-subcontractor, or their agents or employees or any other persons or entities performing portions of the Work because the Owner has repeatedly failed to fulfill the Owner's obligations under the Contract Documents with respect to matters important to the progress of the Work, the Contractor may, upon seven additional days' notice to the Owner and the Architect, terminate the Contract and recover from the Owner as provided in Section 14.1.3.

§ 14.2 Termination by the Owner for Cause

§ 14.2.1 The Owner may terminate the Contract if the Contractor

.1 refuses or fails to supply enough properly skilled workers or proper materials ***and/or equipment***;

.2 fails to make ***prompt*** payment to Subcontractors or suppliers in accordance with the respective agreements between the Contractor and the Subcontractors or suppliers;

.3 disregards applicable laws, statutes, ordinances, codes, rules and regulations, or lawful orders of a public authority; or

.4 otherwise is guilty of substantial breach of a provision of the Contract Documents ***disregards the instructions of Architect or Owner (when such instructions are based on the requirements of the Contract Documents).***

.5 Is adjudged bankrupt or insolvent, or makes a general assignment for the benefit of Contractor's creditors, or a trustee or a receiver is appointed for Contractor or for any of its property, or files a petition to take advantage of any debtor's act, or to recognize under bankruptcy or similar laws; or

.6 Breaches any warranty made by the Contractor under or pursuant to the Contact Documents.

.7 Fails to furnish the Owner with assurances satisfactory to the Owner evidencing the Contractor's ability to complete the Work in compliance with the requirements of the Contract Documents.

.8 Fails after the commencement of the Work to proceed continuously with the construction and completion of the work for more than 10 days except as permitted under the Contract Documents.

.9 Otherwise does not fully comply with the Contract Documents.

§ 14.2.2 When any of the reasons described in Section 14.2.1 exist, and upon certification by the Architect that sufficient cause exists to justify such action, the Owner may, without prejudice to any other rights or remedies of the

AIA Document A201™ – 2017. Copyright © 1911, 1915, 1918, 1925, 1937, 1951, 1958, 1961, 1963, 1966, 1970, 1976, 1987, 1997, 2007 and 2017 by The American Institute of Architects. **All rights reserved. WARNING: This AIA® Document is protected by U.S. Copyright Law and International Treaties. Unauthorized reproduction or distribution of this AIA® Document, or any portion of it, may result in severe civil and criminal penalties, and will be prosecuted to the maximum extent possible under the law.** This draft was produced by AIA software at 09:54:27 on 07/24/2018 under Order No.9799823797 which expires on 01/19/2019, and is not for resale.
User Notes: (913728330)

Owner and after giving the Contractor and the Contractor's surety, if any, seven days' notice, terminate employment of the Contractor and may, subject to any prior rights of the surety:

.1 Exclude the Contractor from the site and take possession of all materials, equipment, tools, and construction equipment and machinery thereon owned by the Contractor;

.2 Accept assignment of subcontracts pursuant to Section 5.4; and

.3 Finish the Work by whatever reasonable method the Owner may deem expedient. Upon written request of the Contractor, the Owner shall furnish to the Contractor a detailed accounting of the costs incurred by the Owner in finishing the Work.

§ 14.2.3 When the Owner terminates the Contract for one of the reasons stated in Section 14.2.1, the Contractor shall not be entitled to receive further payment until the Work is finished.

§ 14.2.4.1 If the costs of finishing the Work, including compensation for the services of any consultants and the Architect's services and expenses made necessary thereby, and the other costs and expenses identified hereinafter, exceed the unpaid balance of the Contract Sum, the contractor and its Surety shall pay the difference to the Owner upon demand. The costs of finishing the Work include, without limitation, all reasonable attorney's fees, additional title costs, insurance, additional interest because of any delay in completing the Work, and all other direct and indirect consequential costs, including, without limitation, Liquidated Damages for untimely completion as specified in the Contract Documents, incurred by the Owner by reason of, or arising from, or relating to the termination of the Contractor as stated herein

§ 14.3 Suspension by the Owner for Convenience

§ 14.3.1 The Owner may, without cause, order the Contractor in writing to suspend, delay or interrupt the Work, in whole or in part for such period of time as the Owner may determine.

§ 14.4 Termination by the Owner for Convenience

§ 14.4.1 The Owner may, at any time, terminate the Contract for the Owner's convenience and without cause.

§ 14.4.2 Upon receipt of notice from the Owner of such termination for the Owner's convenience, the Contractor shall

.1 cease operations as directed by the Owner in the notice;

.2 take actions necessary, or that the Owner may direct, for the protection and preservation of the Work; and

.3 except for Work directed to be performed prior to the effective date of termination stated in the notice, terminate all existing subcontracts and purchase orders and enter into no further subcontracts and purchase orders.

§ 14.4.3.1 In case of such termination for the Owner's convenience, the Contractor shall be entitled to Owner payment for Work performed as of the date of termination in accordance with the contract Documents. The Contractor shall, as a condition of receiving the payments referred to herein, execute and deliver all such papers, turn over all plans, documents and files of whatsoever nature required by the Owner, and take all such steps, including the legal assignment of its contractual rights, as the Owner may require for the purpose of fully vesting in the Owner the rights and benefits of the Contractor. The Contractor warrants that it will enter into no subcontracts or other agreements that would adversely impact the Owner's rights or increase the Owner's obligations under this paragraph. In no event shall the Owner be liable to the Contractor for lost or anticipated profits or consequential damages, or for any amount in excess of the compensation due to the Contractor in accord with the Contract Documents for the Work performed as of the date of termination. The warranty and indemnity obligations of the Contractor and Surety shall survive and continue, notwithstanding any termination pursuant to this paragraph, with respect to the Work performed as of the date of termination.

§ 14.4.4 If Owner terminates the Contract for cause pursuant to Paragraph 14.2 and it is subsequently determined that the Owner was not authorized to terminate the Contract as provided in Paragraph 14.2, the Owner's termination shall be treated as a termination for convenience under this Paragraph 14.4 and the rights and obligations of the parties shall be the same as if the Owner has issued a notice of termination to the Contractor as provided in this Paragraph 14.4.

§ 14.5 Contractor shall promptly pay to Owner all costs and reasonable attorney's fees incurred in connection

AIA Document A201™ – 2017. Copyright © 1911, 1915, 1918, 1925, 1937, 1951, 1958, 1961, 1963, 1966, 1970, 1976, 1987, 1997, 2007 and 2017 by The American Institute of Architects. **All rights reserved. WARNING: This AIA® Document is protected by U.S. Copyright Law and International Treaties. Unauthorized reproduction or distribution of this AIA® Document, or any portion of it, may result in severe civil and criminal penalties, and will be prosecuted to the maximum extent possible under the law.** This draft was produced by AIA software at 09:54:27 on 07/24/2018 under Order No.9799823797 which expires on 01/19/2019, and is not for resale.
User Notes: (913728330)

with any action or proceeding in which Owner prevails, based on a breach of the Contract or other dispute arising out of or in connection with the Contract.

§ 14.6 In the event of the appointment of a trustee and/or receiver or any similar occurrence affecting the management of the account of the Contractor pertaining to the Work, it shall be the obligation of the Contractor, its representatives, receivers, sureties, or successors in interest to continue the progress of the Work without delay and specifically to make timely payment to Subcontractors and Suppliers of all amounts that are lawfully due them and to provide the Owner and all Subcontractors and Suppliers whose work may be affected with timely notice of the status of receivership, bankruptcy, etc., and the status of their individual accounts.

§ 14.7 Regularly scheduled job meetings shall be held at a location and time convenient to the Owner's representatives, the Architect and the Contractor. The Contractor shall attend such meetings or be represented by a person in authority who can speak for and make decisions for the Contractor.

ARTICLE 15 CLAIMS AND DISPUTES

§ 15.1 Claims

§ 15.1.1 Definition

A Claim is a demand or assertion by one of the parties seeking, as a matter of right, payment of money, a change in the Contract Time, or other relief with respect to the terms of the Contract. The term "Claim" also includes other disputes and matters in question between the Owner and Contractor arising out of or relating to the Contract. The responsibility to substantiate Claims shall rest with the party making the Claim. This Section 15.1.1 does not require the Owner to file a Claim in order to impose liquidated damages in accordance with the Contract Documents.

§ 15.1.2 Time Limits on Claims

The Owner and Contractor shall commence all Claims and causes of action against the other and arising out of or related to the Contract, whether in contract, tort, breach of warranty or otherwise, in accordance with the ***law and*** requirements of ***the State of New Jersey*** ~~the binding dispute resolution method selected in the Agreement~~ and within the period specified by applicable law, but in any case not more than 10 years after the date of Substantial Completion of the Work. The Owner and Contractor waive all Claims and causes of action not commenced in accordance with this Section 15.1.2.

§ 15.1.2.1 No act or omission by the Owner or Architect, or by anyone acting on behalf of either shall be deemed or construed as a waiver or limitation of any right or remedy under the Contract Documents, or as an admission, acceptance, or approval with respect to any breach of the Contract for Construction or failure to comply with the Contract Documents by the Contractor, unless the Owner expressly agrees, in writing.

§ 15.1.2.2 The Owner's exercise, or failure to exercise, any rights, claims or remedies it may have arising out of or relating to the Contract documents shall not release, prejudice, or discharge the Owner's other rights and remedies, nor shall it give rise to any right, claim, remedy or defense by any other person, including the Contractor, its Surety, any Subcontractor, or any other person or entity.

§ 15.1.2.3 Whenever possible, each provision of the Contract Documents shall be interpreted in a manner as to be effective and valid under applicable law. If, however, any provision of the Contract Documents, or portion thereof, is prohibited or found invalid by law, only such invalid provision or portion thereof shall be ineffective, and shall not invalidate or affect the remaining provision of the Contract Documents or valid portions of such provision, which shall be deemed severable. Further, if any provision of this Contract is deemed inconsistent with applicable law, applicable law shall control.

§ 15.1.2.4 Contractor shall promptly pay to Owner all costs and reasonable attorney's fees incurred in connection with any action or proceeding in which Owner prevails, based on a breach of the Contract or other dispute arising out of or in connection with the Contract.

§ 15.1.2.5 In the event of the appointment of a trustee and/or receiver or any similar occurrence affecting the management of the account of the Contractor pertaining to the Work, it shall be the obligation of the Contractor, its representatives, receivers, sureties, or successors in interest to continue the progress of the Work without delay and specifically to make timely payment to Subcontractors and Suppliers of all amounts that are lawfully due them and to provide the Owner and all Subcontractors and Suppliers whose work may be affected with timely

AIA Document A201™ – 2017. Copyright © 1911, 1915, 1918, 1925, 1937, 1951, 1958, 1961, 1963, 1966, 1970, 1976, 1987, 1997, 2007 and 2017 by The American Institute of Architects. **All rights reserved. WARNING: This AIA® Document is protected by U.S. Copyright Law and International Treaties. Unauthorized reproduction or distribution of this AIA® Document, or any portion of it, may result in severe civil and criminal penalties, and will be prosecuted to the maximum extent possible under the law.** This draft was produced by AIA software at 09:54:27 on 07/24/2018 under Order No.9799823797 which expires on 01/19/2019, and is not for resale.
User Notes: (913728330)

notice of the status of receivership, bankruptcy, etc., and the status of their individual accounts.

§ 15.1.3 Notice of Claims

§ 15.1.3.1 Claims by either the Owner or Contractor, where the condition giving rise to the Claim is first discovered prior to expiration of the period for correction of the Work set forth in Section 12.2.2, shall be initiated by notice to the other party and to the Initial Decision Maker with a copy sent to the Architect, if the Architect is not serving as the Initial Decision Maker. Claims by either party under this Section 15.1.3.1 shall be initiated within ~~21~~ ***5*** days after occurrence of the event giving rise to such Claim or within ~~21~~ ***5*** days after the claimant first recognizes the condition giving rise to the Claim, whichever is later.

§ 15.1.3.2 Injury or Damage to Person or Property. If either party to the Contract suffers injury or damage to person or property because of an act or omission of the other party, or of others for whose acts such party is legally responsible, written notice of such injury or damage, whether or not insured, shall be given to the other party within a reasonable time not exceeding five (5) days after discovery. The notice shall provide sufficient detail to enable the other party to investigate the matter.

§ 15.1.3.2 Claims by either the Owner or Contractor, where the condition giving rise to the Claim is first discovered after expiration of the period for correction of the Work set forth in Section 12.2.2, shall be initiated by notice to the other party. In such event, no decision by the Initial Decision Maker is required.

§ 15.1.4 Continuing Contract Performance

§ 15.1.4.1 Pending final resolution of a Claim, except as otherwise agreed in writing or as provided in Section 9.7 and Article 14, the Contractor shall proceed diligently with performance of the Contract and the Owner shall continue to make payments in accordance with the Contract Documents.

§ 15.1.4.2 The Contract Sum and Contract Time shall be adjusted in accordance with the Initial Decision Maker's decision, subject to the right of either party to proceed in accordance with this Article 15. The Architect will issue Certificates for Payment in accordance with the ***final resolution of the claim.*** ~~decision of the Initial Decision Maker~~.

§ 15.1.4.3 Claims for Concealed or Unknown Conditions. Subject to the Contractor's obligations under Articles 1.9.2 and 2.3.4, if conditions are encountered at the site which are (1) subsurface or otherwise concealed physical conditions which differ materially from those indicated in the Contract Documents or (2) unknown physical conditions of an unusual nature, which differ materially from those ordinarily found to exist and generally recognized as inherent in construction activities of the character provided for in the Contract Documents, then notice by the observing party shall be given to the other party promptly before conditions are disturbed and in no event later than five (5) days after first observance of the conditions. The Architect will promptly investigate such conditions and, if they differ materially and cause an increase or decrease in the Contractor's cost of, or time required for, performance of any part of the Work, will recommend an equitable adjustment in the Contract Sum or Contract Time, or both. If the Architect determines that the conditions at the site are not materially different from those indicated in the Contract Documents and that no change in the terms of the Contract is justified, the Architect shall so notify the Owner and Contractor in writing, stating the reasons. Claims by either party in opposition to such determination must be made within 5 days after the Architect has given notice of the decision. If the conditions encountered are materially different, the Contract Sum and Contract Time shall be equitably adjusted, but if the Owner and Contractor cannot agree on an adjustment in the Contract Sum or Contract Time, the adjustment shall be referred to the Architect for initial determination, subject to further proceedings pursuant to Section 15.2.5.1.

§ 15.1.5 Claims for Additional Cost

If the Contractor wishes to make a Claim for an increase in the Contract Sum, notice as provided ~~in Section 15.1.3~~ ***herein*** shall be given ***to the Owner and Architect*** before proceeding to execute the portion of the Work that is the subject of the Claim ***and within five (5) days after the occurrence of the event giving rise to such Claim for increase in the Construct Sum. The foregoing written notice shall contain a written statement from the Contractor setting forth in detail the nature and cause of the Claim and an itemized statement of the increase requested. No such written notice shall form the basis of an increase to the Contract Sum unless and until such increase has been authorized by a written Change Order executed and issued according to the terms and conditions set forth herein. The Contractor hereby acknowledges that the Contractor shall not have any right to and the Owner will not consider any requests for an increase in the Contract Sum that is not submitted in***

AIA Document A201™ – 2017. Copyright © 1911, 1915, 1918, 1925, 1937, 1951, 1958, 1961, 1963, 1966, 1970, 1976, 1987, 1997, 2007 and 2017 by The American Institute of Architects. **All rights reserved. WARNING: This AIA® Document is protected by U.S. Copyright Law and International Treaties. Unauthorized reproduction or distribution of this AIA® Document, or any portion of it, may result in severe civil and criminal penalties, and will be prosecuted to the maximum extent possible under the law.** This draft was produced by AIA software at 09:54:27 on 07/24/2018 under Order No.9799823797 which expires on 01/19/2019, and is not for resale.
User Notes: (913728330)

compliance with the foregoing requirements. . Prior notice is not required for Claims relating to an emergency endangering life or property arising under Section 10.4.

§ 15.1.6 Claims for Additional Time

§ 15.1.6.1 If the Contractor wishes to make a Claim for an increase in the Contract Time, notice as provided in Section 15.1.3 shall be given. ***Said notice shall itemize all claims and shall contain sufficient detail and substantiating data to permit evaluation of same by Owner and Architect. No such claim shall be valid unless so made*** The Contractor's Claim shall include an estimate of cost and of probable effect of delay on progress of the Work. In the case of a continuing delay, only one Claim is necessary. ***Any change in the Contract Sum resulting from such claim shall be authorized only by Change Order or Construction Change Directive, as the case may be. All required notices for additional costs shall be made by Certified Mail.***

§ 15.1.6.2 If adverse weather conditions are the basis for a Claim for additional time, such Claim shall be documented by data substantiating that weather conditions were abnormal for the period of time, could not have been reasonably anticipated, and had an adverse effect on the scheduled construction ***as determined by reference to historical data. The term "historical data" as used in the previous sentence shall be construed according to this formula: Average rainfall (or snow or low temperature) for the past five years.***

§ 15.2 Initial Decision

§ 15.2.1 Claims, excluding those where the condition giving rise to the Claim is first discovered after expiration of the period for correction of the Work set forth in Section 12.2.2 or arising under Sections 10.3, 10.4, ~~and 11.5~~, shall be referred to the Initial Decision Maker for initial decision. The Architect will serve as the Initial Decision Maker, unless otherwise indicated in the Agreement. Except for those Claims excluded by this Section 15.2.1, an initial decision shall be required as a condition precedent to ***litigation*** of any Claim. If an initial decision has not been rendered within 30 days after the Claim has been referred to the Initial Decision Maker, the party asserting the Claim may demand mediation and binding dispute resolution without a decision having been rendered. Unless the Initial Decision Maker and all affected parties agree, the Initial Decision Maker will not decide disputes between the Contractor and persons or entities other than the Owner.

§ 15.2.2 The Initial Decision Maker will review Claims and within ten days of the receipt of a Claim take one or more of the following actions: (1) request additional supporting data from the claimant or a response with supporting data from the other party, (2) reject the Claim in whole or in part, (3) approve the Claim, (4) suggest a compromise, or (5) advise the parties that the Initial Decision Maker is unable to resolve the Claim if the Initial Decision Maker lacks sufficient information to evaluate the merits of the Claim or if the Initial Decision Maker concludes that, in the Initial Decision Maker's sole discretion, it would be inappropriate for the Initial Decision Maker to resolve the Claim.

§ 15.2.3 In evaluating Claims, the Initial Decision Maker may, but shall not be obligated to, consult with or seek information from either party or from persons with special knowledge or expertise who may assist the Initial Decision Maker in rendering a decision. The Initial Decision Maker may request the Owner to authorize retention of such persons at the Owner's expense.

§ 15.2.4 If the Initial Decision Maker requests a party to provide a response to a Claim or to furnish additional supporting data, such party shall respond, within ten days after receipt of the request, and shall either (1) provide a response on the requested supporting data, (2) advise the Initial Decision Maker when the response or supporting data will be furnished, or (3) advise the Initial Decision Maker that no supporting data will be furnished. Upon receipt of the response or supporting data, if any, the Initial Decision Maker will either reject or approve the Claim in whole or in part.

§ 15.2.5 The Initial Decision Maker will render an initial decision approving or rejecting the Claim, or indicating that the Initial Decision Maker is unable to resolve the Claim. This initial decision shall (1) be in writing; (2) state the reasons therefor; and (3) notify the parties and the Architect, if the Architect is not serving as the Initial Decision Maker, of any change in the Contract Sum or Contract Time or both. The initial decision shall be final and binding on the parties but subject to ***litigation.*** ~~mediation and, if the parties fail to resolve their dispute through mediation, to binding dispute resolution.~~

§15.2.5.1 All claims and disputes and other matters in question between the Contractor and the Owner arising out of or relating to the Contract Documents or a breach thereof with regard to the Architect's decision, shall be

AIA Document A201™ – 2017. Copyright © 1911, 1915, 1918, 1925, 1937, 1951, 1958, 1961, 1963, 1966, 1970, 1976, 1987, 1997, 2007 and 2017 by The American Institute of Architects. **All rights reserved. WARNING: This AIA® Document is protected by U.S. Copyright Law and International Treaties. Unauthorized reproduction or distribution of this AIA® Document, or any portion of it, may result in severe civil and criminal penalties, and will be prosecuted to the maximum extent possible under the law.** This draft was produced by AIA software at 09:54:27 on 07/24/2018 under Order No.9799823797 which expires on 01/19/2019, and is not for resale.
User Notes: (913728330)

decided through suit in New Jersey Superior Court venued in the County that the Owner occupies and Contractor consents to the jurisdiction of the New Jersey Superior Court venued in the County that the Owner occupies. The Contractor shall carry on all work and maintain its progress during such suit and the Owner shall continue to make payments not related to the dispute of the Contractor in accordance with Contract Documents.

§ 15.2.7 In the event of a Claim against the Contractor, the Owner ***and Architect*** may, but is not obligated to, notify the surety, if any, of the nature and amount of the Claim. If the Claim relates to a possibility of a Contractor's default, the Owner ***and Architect*** may, but is not obligated to, notify the surety and request the surety's assistance in resolving the controversy.

§ 15.2.8 If a Claim relates to or is the subject of a mechanic's lien, the party asserting such Claim may proceed in accordance with applicable law to comply with the lien notice or filing deadlines ***prior to resolution of the claim by the Architect***.

§ 15.4.4 Consolidation or Joinder

§ 15.4.4.1 Subject to the rules of the American Arbitration Association or other applicable arbitration rules, either party may consolidate an arbitration conducted under this Agreement with any other arbitration to which it is a party provided that (1) the arbitration agreement governing the other arbitration permits consolidation, (2) the arbitrations to be consolidated substantially involve common questions of law or fact, and (3) the arbitrations employ materially similar procedural rules and methods for selecting arbitrator(s).

§ 15.4.4.2 Subject to the rules of the American Arbitration Association or other applicable arbitration rules, either party may include by joinder persons or entities substantially involved in a common question of law or fact whose presence is required if complete relief is to be accorded in arbitration, provided that the party sought to be joined consents in writing to such joinder. Consent to arbitration involving an additional person or entity shall not constitute consent to arbitration of any claim, dispute or other matter in question not described in the written consent.

§ 15.4.4.3 The Owner and Contractor grant to any person or entity made a party to an arbitration conducted under this Section 15.4, whether by joinder or consolidation, the same rights of joinder and consolidation as those of the Owner and Contractor under this Agreement.

4811-8023-3858, v. 1

DRAFT

AIA Document A201™ – 2017. Copyright © 1911, 1915, 1918, 1925, 1937, 1951, 1958, 1961, 1963, 1966, 1970, 1976, 1987, 1997, 2007 and 2017 by The American Institute of Architects. **All rights reserved. WARNING: This AIA® Document is protected by U.S. Copyright Law and International Treaties. Unauthorized reproduction or distribution of this AIA® Document, or any portion of it, may result in severe civil and criminal penalties, and will be prosecuted to the maximum extent possible under the law.** This draft was produced by AIA software at 09:54:27 on 07/24/2018 under Order No.9799823797 which expires on 01/19/2019, and is not for resale.
User Notes: (913728330)

APPLICATION AND CERTIFICATE FOR PAYMENT AIA DOCUMENT G702 (Instructions on reverse side) PAGE ONE OF PAGES

TO OWNER:

PROJECT:

APPLICATION NO.:
PERIOD TO:
PROJECT NOS.:

Distribution to:
☐ OWNER
☐ ARCHITECT
☐ CONTRACTOR
☐
☐

FROM CONTRACTOR:

VIA ARCHITECT:

CONTRACT DATE:

CONTRACT FOR:

CONTRACTOR'S APPLICATION FOR PAYMENT

Application is made for payment, as shown below, in connection with the Contract. Continuation Sheet, AIA Document G703, is attached.

1. **ORIGINAL CONTRACT SUM** ..... $_____
2. **Net change by Change Orders** ..... $_____
3. **CONTRACT SUM TO DATE** (Line 1 ± 2) ..... $_____
4. **TOTAL COMPLETED & STORED TO DATE** ..... $_____
   (Column G on G703)
5. **RETAINAGE:**
   a. _____% of Completed Work $_____
   (Columns D + E on G703)
   b. _____% of Stored Material $_____
   (Column F on G703)
   Total Retainage (Line 5a + 5b or
   Total in Column I of G703) ..... $_____
6. **TOTAL EARNED LESS RETAINAGE** ..... $_____
   (Line 4 less Line 5 Total)
7. **LESS PREVIOUS CERTIFICATES FOR PAYMENT**
   (Line 6 from prior Certificate) ..... $_____
8. **CURRENT PAYMENT DUE** ..... $
9. **BALANCE TO FINISH, INCLUDING RETAINAGE**
   (Line 3 less Line 6) $_____

CHANGE ORDER SUMMARY	ADDITIONS	DEDUCTIONS
Total changes approved in previous months by Owner		
Total approved this Month		
TOTALS		
NET CHANGES by Change Order		

The undersigned Contractor certifies that to the best of the Contractor's knowledge, information and belief the Work covered by this Application for Payment has been completed in accordance with the Contract Documents, that all amounts have been paid by the Contractor for Work for which previous Certificates for Payment were issued and payments received from the Owner, and that current payment shown herein is now due.

CONTRACTOR:

By: _____ Date: _____

State of:
County of:
Subscribed and sworn to before me this day of

Notary Public:
My Commission expires:

ARCHITECT'S CERTIFICATE FOR PAYMENT

In accordance with the Contract Documents, based on on-site observations and the data comprising this application, the Architect certifies to the Owner that to the best of the Architect's knowledge, information and belief the Work has progressed as indicated, the quality of the Work is in accordance with the Contract Documents, and the Contractor is entitled to payment of the AMOUNT CERTIFIED.

AMOUNT CERTIFIED ..... $_____

(Attach explanation if amount certified differs from the amount applied for. Initial all figures on this Application and on the Continuation Sheet that are changed to conform to the amount certified.)

ARCHITECT:

By: _____ Date: _____

This Certificate is not negotiable. The AMOUNT CERTIFIED is payable only to the Contractor named herein. Issuance, payment and acceptance of payment are without prejudice to any rights of the Owner or Contractor under this Contract.

AIA DOCUMENT G702 • APPLICATION AND CERTIFICATE FOR PAYMENT • 1992 EDITION • AIA® • ©1992 • THE AMERICAN INSTITUTE OF ARCHITECTS, 1735 NEW YORK AVENUE, N.W., WASHINGTON, D.C. 20006-5292 • **WARNING: Unlicensed photocopying violates U.S. copyright laws and will subject the violator to legal prosecution.**

CAUTION: You should use an original AIA document which has this caution printed in red. An original assures that changes will not be obscured as may occur when documents are reproduced.

INSTRUCTION SHEET

AIA DOCUMENTS G702 and G703

A. GENERAL INFORMATION

1. Purpose and Related Documents

AIA Document G702, Application and Certificate for Payment, is to be used in conjunction with AIA Document G703, Continuation Sheet. These documents are designed to be used on a Project where a Contractor has a direct Agreement with the Owner. Procedures for their use are covered in AIA Document A201, General Conditions of the Contract for Construction, 1987 Edition.

2. Use of Current Documents

Prior to using any AIA document, the user should consult the AIA, an AIA component chapter or a current AIA Documents List to determine the current edition of each document.

3. Limited License for Reproduction

AIA Documents G702 and G703 are copyrighted works and may not be reproduced or excerpted from in substantial part without the express written permission of the AIA. The documents are intended to be used as consumables—that is, the original documents purchased by the user are intended to be consumed in the course of being used. There is no implied permission to reproduce these documents, nor does membership in The American Institute of Architects confer any further rights to reproduce G702 and G703.

A limited license is hereby granted to retail purchasers to reproduce a maximum of ten copies of a completed or executed G702 and G703, but only for use in connection with a particular Project. Further reproductions are prohibited without the express written permission of the AIA.

B. COMPLETING THE G702 FORM:

After the Contractor has completed AIA Document G703, Continuation Sheet, summary information should be transferred to AIA Document G702, Application and Certificate for Payment.

The Contractor should sign G702, have it notarized and submit it, together with G703, to the Architect.

The Architect should review G702 and G703 and, if they are acceptable, complete the Architect's Certificate for Payment on G702. The Architect may certify a different amount than that applied for pursuant to Paragraphs 9.5 and 9.6 of A201. The Architect should then initial all figures on G702 and G703 that have been changed to conform to the amount certified and attach an explanation. The completed G702 and G703 should be forwarded to the Owner.

C. COMPLETING THE G703 FORM:

Heading: This information should be completed to be consistent with similar information on AIA Document G702, Application and Certificate for Payment.

Columns A, B & C: These columns should be completed by identifying the various portions of the Project and their scheduled value consistent with the schedule of values submitted to the Architect at the commencement of the Project or as subsequently adjusted. The breakdown may be by sections of the Work or by Subcontractors and should remain consistent throughout the Project. Multiple pages should be used when required.

Column C should be subtotaled at the bottom when more than one page is used and totaled on the last page. Initially, this total should equal the original Contract Sum. The total of column C may be adjusted by Change Orders during the Project.

Column D: Enter in this column the amount of completed work covered by the previous application (columns D + E from the previous application). Values from column F (Materials Presently Stored) from the previous application should not be entered in this column.

Column E: Enter here the value of Work completed at the time of this application, including the value of materials incorporated into the project which were listed on the previous application under Materials Presently Stored (column F).

Column F: Enter here the value of Materials Presently Stored for which payment is sought. The total of the column *must* be recalculated at the end of each pay period. This value covers both materials newly stored for which payment is sought and materials previously stored which are not yet incorporated into the Project. Mere payment by the Owner for stored materials does not result in a deduction from this column. Only as materials are incorporated into the Project is their value deducted from this column and incorporated into column E (Work Completed—This Period).

Column G: Enter here the total of columns D, E and F. Calculate the percentage completed by dividing column G by column C.

Column H: Enter here the difference between column C (Scheduled Value) and column G (Total Completed and Stored to Date).

Column I: This column is normally used only for contracts where variable retainage is permitted on a line-item basis. It need not be completed on projects where a constant retainage is withheld from the overall contract amount.

Change Orders: Although Change Orders could be incorporated by changing the schedule of values each time a Change Order is added to the Project, this is not normally done. Usually, Change Orders are listed separately, either on their own G703 form or at the end of the basic schedule. The amount of the original contract adjusted by Change Orders is to be entered in the appropriate location on the G702 form.

Construction Change Directives: Amounts not in dispute that have been included in Construction Change Directives should be incorporated into one or more Change Orders. Amounts remaining in dispute should be dealt with according to Paragraph 7.3 in A201.

D. MAKING PAYMENT

The Owner should make payment directly to the Contractor based on the amount certified by the Architect on AIA Document G702, Application and Certificate for Payment. The completed form contains the name and address of the Contractor. Payment should not be made to any other party unless specifically indicated on G702.

E. EXECUTION OF THE DOCUMENT

Each person executing the Agreement should indicate the capacity in which they are acting (i.e., president, secretary, partner, etc.) and the authority under which they are executing the Agreement. Where appropriate, a copy of the resolution authorizing the individual to act on behalf of the firm or entity should be attached.

CONTINUATION SHEET

AIA DOCUMENT G703 (Instructions on reverse side)

PAGE OF PAGES

AIA Document G702, APPLICATION AND CERTIFICATE FOR PAYMENT, containing Contractor's signed Certification, is attached.
In tabulations below, amounts are stated to the nearest dollar.
Use Column I on Contracts where variable retainage for line items may apply.

APPLICATION NO.:
APPLICATION DATE:
PERIOD TO:
ARCHITECT'S PROJECT NO.:

A	B	C	D	E	F	G		H	I
ITEM NO.	DESCRIPTION OF WORK	SCHEDULED VALUE	WORK COMPLETED		MATERIALS PRESENTLY STORED (NOT IN D OR E)	TOTAL COMPLETED AND STORED TO DATE (D+E+F)	% (G ÷ C)	BALANCE TO FINISH (C − G)	RETAINAGE (IF VARIABLE) RATE)
			FROM PREVIOUS APPLICATION (D + E)	THIS PERIOD					

AIA DOCUMENT G703 • CONTINUATION SHEET FOR G702 • 1992 EDITION • AIA® • ©1992 • THE AMERICAN INSTITUTE OF ARCHITECTS, 1735 NEW YORK AVENUE, N.W., WASHINGTON, D.C. 20006-5292 • WARNING: Unlicensed photocopying violates U.S. copyright laws and will subject the violator to legal prosecution.

G703-1992

CAUTION: You should use an original AIA document which has this caution printed in red. An original assures that changes will not be obscured as may occur when documents are reproduced.

INSTRUCTION SHEET

FOR AIA DOCUMENT G703

A. GENERAL INFORMATION

1. Purpose and Related Documents

AIA Document G702, Application and Certificate for Payment, is to be used in conjunction with AIA Document G703, Continuation Sheet. These documents are designed for use on Projects where the Contractor has a direct Agreement with the Owner. Procedures for their use are covered in AIA Document A201, General Conditions of the Contract for Construction, 1987 Edition.

2. Use of Current Documents

The user should consult the AIA, an AIA component chapter or a current AIA Documents List to determine the current edition of each document.

3. Limited License for Reproduction

AIA Document G703 is a copyrighted work and may not be reproduced or excerpted from in substantial part without the express written permission of the AIA. The document is intended to be used as a consumable—that is, the original document purchased by the user is intended to be consumed in the course of being used. There is no implied permission to reproduce this document, nor does membership in The American Institute of Architects confer any further rights to reproduce G703. A limited license is hereby granted to retail purchasers to reproduce a maximum of ten copies of a completed or executed G703, but only for use in connection with a particular Project. Further reproductions are prohibited without the express written permission of the AIA.

B. COMPLETING THE G703 FORM:

Heading: This information should be completed in a manner consistent with similar information on AIA Document G702, Application and Certificate for Payment.

Columns A, B & C: These columns should be completed by identifying the various portions of the Project and their scheduled values consistent with the schedule of values submitted to the Architect at the commencement of the Project or as subsequently adjusted. The breakdown may be by sections of the Work or by Subcontractors and should remain consistent throughout the Project. Multiple pages should be used when required.

Column C should be subtotaled at the bottom when more than one page is used and totaled on the last page. Initially, this total should equal the original Contract Sum. The total of column C may be adjusted by Change Orders during the Project.

Column D: Enter in this column the amount of completed Work covered by the previous application (columns D & E from the previous application). Values from column F (Materials Presently Stored) from the previous application should not be entered in this column.

Column E: Enter here the value of Work completed at the time of this application, including the value of materials incorporated in the project that were listed on the previous application under Materials Presently Stored (column F).

Column F: Enter here the value of Materials Presently Stored for which payment is sought. The total of the column must be recalculated at the end of each pay period. This value covers both materials newly stored for which payment is sought and materials previously stored which are not yet incorporated into the Project. Mere payment by the Owner for stored materials does not result in a deduction from this column. Only as materials are incorporated into the Project is their value deducted from this column and incorporated into column E (Work Completed—This Period.)

Column G: Enter here the total of columns D, E and F. Calculate the percentage completed by dividing column G by column C.

Column H: Enter here the difference between column C (Scheduled Value) and column G (Total Completed and Stored to Date).

Column I: This column is normally used only for contracts where variable retainage is permitted on a line item basis. It need not be completed on projects where a constant retainage is withheld from the overall contract amount.

Change Orders: Although Change Orders could be incorporated by changing the schedule of values each time a Change Order is added to the Project, this is not normally done. Usually, Change Orders are listed separately, either on their own G703 form or at the end of the basic schedule. The amount of the original contract adjusted by Change Orders is to be entered in the appropriate location on the G702 form.

Construction Change Directives: Amounts not in dispute that have been included in Construction Change Directives should be incorporated into one or more Change Orders. Amounts remaining in dispute should be dealt with according to Paragraph 7.3 in A201.

The following is an example of a Continuation Sheet for work in progress. Please note that dollar amounts shown below are for illustrative purposes only, and are not intended to reflect actual construction costs.

A	B	C	D	E	F	G		H	I
			WORK COMPLETED						
ITEM NO.	DESCRIPTION OF WORK	SCHEDULED VALUE	FROM PREVIOUS APPLICATION (D + E)	THIS PERIOD	MATERIALS PRESENTLY STORED (NOT IN D OR E)	TOTAL COMPLETED AND STORED TO DATE (D+E+F)	% (G ÷ C)	BALANCE TO FINISH (C - G)	RETAINAGE (IF VARIABLE RATE)
1	MOBILIZATION	5,000	5,000	0	0	5,000	100	0	NOT APPLICABLE TO CONSTANT RATE RETAINAGE
2	STUMP REMOVAL	5,000	5,000	0	0	5,000	100	0	
3	EARTH WORK	15,000	10,000	5,000	0	15,000	100	0	
4	LOWER RETAING WALL	10,000	0	5,000	0	5,000	50	5,000	
5	CURBS & MISC. CONC.	5,000	0	0	0	0	0	5,000	
6	PAVING, UPPER DRIVE	20,000	0	0	0	0	0	20,000	
7	PAVING, LOWER DRIVE	20,000	0	0	0	0	0	20,000	
8	PAVERS	10,000	0	0	10,000	10,000	50	10,000	
9	BRICK WORK	5,000	0	0	0	0	0	5,000	
		105,000	10,000	10,000	10,000	40,000		65,000	

Instruction Sheet revised 4/94 without procedural change.

SECTION 011000 (NHG) – SUMMARY

PART 1 - GENERAL

1.1 RELATED DOCUMENTS

A. Drawings and general provisions of the Contract, including General and Supplementary Conditions and other Division 01 Specification Sections, apply to this Section.

1.2 SUMMARY

A. **Section Includes the following information as it relates to Hopkins Gymnasium:**

1. Project information.
2. Work covered by Contract Documents.
3. Owner-furnished/Contractor-installed (OFCI) products.
4. Owner-furnished/Owner-installed (OFOI) products.
5. Contractor's use of site and premises.
6. Coordination with occupants.
7. Work restrictions.
8. Specification and Drawing conventions.

B. Related Requirements:

1. Section 015000 "Temporary Facilities and Controls" for limitations and procedures governing temporary use of Owner's facilities.
2. Section 017300 "Execution" for coordination of Owner-installed products.

1.3 DEFINITIONS

A. Work Package: A group of specifications, drawings, and schedules prepared by the design team to describe a portion of the Project Work for pricing, permitting, and construction.

1.4 PROJECT INFORMATION

A. Project Identification: *Hopkins Gymnasium*

1. Project Location:
   a. Haddonfield Memorial High School, 401 Kings Highway East, Haddonfield, NJ 08033.

B. Owner: Haddonfield Public Schools, United States.

1. Owner's Representative: Michael Catalano, School Business Administrator.

C. Architect: LAN Associates, E.P.A.S., Inc.

1. Architect's Representative: Jeffrey M. Potter, AIA.

D. Engineer: LAN Associates, E.P.A.S., Inc.

1. Mechanical, Electrical, Plumbing Engineering Representative: Thomas Wighard, PE

E. Construction Manager: Colliers Engineering & Design.

1. Construction Manager Representative: Richard Brown.

1.5 WORK COVERED BY CONTRACT DOCUMENTS

A. The Work of Project is defined by the Contract Documents and includes, but is not limited to, the following:

1. New construction of a single-story building.
   a. The Hopkins Gym parcel is a new gymnasium building to be built on the existing Haddonfield High School lot. This new construction will be an A-3 assembly occupancy. This building will be constructed as slab-on-grade with concrete and block foundations and footings. The exterior envelope will feature brick masonry, cast-stone details, and translucent daylighting sandwich panels. Bearing CMU and steel columns will support the steel joist roof, metal deck, and partial modified bitumen roof/partial standing seam metal roof over continuous insulation. The construction type will be II-B and the full building will be sprinklered.
   b. The program of this building includes a high school basketball gym, a wrestling gym with an office, locker rooms, trainer's room, toilet rooms, shower room, electrical and plumbing room, and a couple of storage rooms.
   c. The site work on this cleared and developed site will include a parking lot that will serve the new gym, site lighting, and landscaping.

B. Type of Contract:

1. Project will be constructed under a single prime contract.

1.6 WORK PERFORMED BY OWNER

A. Cooperate fully with Owner, so work may be carried out smoothly, without interfering with or delaying Work under this Contract or work by Owner. Coordinate the Work of this Contract with work performed by Owner.

B. Concurrent Work: Owner will perform the following construction operations at Project site. Those operations will be conducted simultaneously with Work under this Contract.

1. Information Technology integration.

C. Subsequent Work: Owner will perform the following additional work at site after Substantial Completion. Completion of that work will depend on successful completion of preparatory Work under this Contract.

1. Installation of loose furnishings and equipment.

1.7 OWNER-FURNISHED/CONTRACTOR-INSTALLED (OFCI) PRODUCTS

A. Owner's Responsibilities: Owner will furnish the products indicated and perform the following, as applicable:

1. Provide for delivery of Owner-furnished products to Project site.
2. Upon delivery, inspect, with Contractor present, delivered items.
   a. If Owner-furnished products are damaged, defective, or missing, arrange for replacement.
3. Obtain manufacturer's inspections, service, and warranties.
4. Inform Contractor of earliest available delivery date for Owner-furnished products.

B. Contractor's Responsibilities: The Work includes the following, as applicable:

1. Designate delivery dates of Owner-furnished products in Contractor's construction schedule, utilizing Owner-furnished earliest available delivery dates.
2. Receive, unload, handle, store, protect, and install Owner-furnished products.
3. Protect Owner-furnished products from damage during storage, handling, and installation and prior to Substantial Completion.

C. Owner-Furnished/Contractor-Installed (OFCI) Products:

1. Soap Dispensers.
2. Toilet Paper Dispensers.
3. Paper Towel Dispensers.
4. Sanitary Napkin Despensers.
5. Volleyball Sleeves (in-floor).

1.8 OWNER-FURNISHED/OWNER-INSTALLED (OFOI) PRODUCTS

A. The Owner will furnish and install products indicated.

B. Owner-Furnished/Owner-Installed (OFOI) Products:

1. Loose furniture and equipment.
2. Metal Lockers.
3. Gym Equipment.
4. Gym Bleachers.
5. Gym Wall Pads.
6. Scoreboards.
7. Low-Voltage Electrical Devices (i.e. Security cameras, Door Access Control, Wireless Access Portals IT Racks and Wiring)

1.9 CONTRACTOR'S USE OF SITE AND PREMISES

A. Limits on Use of Site: Limit use of Project site to Work in areas indicated. Do not disturb portions of Project site beyond areas in which the Work is indicated.

1. Driveways, Walkways and Entrances: Keep driveways loading areas, and entrances serving premises clear and available to Owner, Owner's employees, and emergency vehicles at all times. Do not use these areas for parking or for storage of materials.
   a. Schedule deliveries to minimize use of driveways and entrances by construction operations.

b. Schedule deliveries to minimize space and time requirements for storage of materials and equipment on-site.

B. Condition of Existing Building: Maintain portions of existing building affected by construction operations in a weathertight condition throughout construction period. Repair damage caused by construction operations.

C. Condition of Existing Grounds: Maintain portions of existing grounds, landscaping, and hardscaping affected by construction operations throughout construction period. Repair damage caused by construction operations.

1.10 COORDINATION WITH OCCUPANTS

A. Partial Owner Occupancy: Owner will occupy the premises during entire construction period, with the exception of areas under construction. Cooperate with Owner during construction operations to minimize conflicts and facilitate Owner usage. Perform the Work so as not to interfere with Owner's operations. Maintain existing exits unless otherwise indicated.

1. Maintain access to existing walkways, corridors, and other adjacent occupied or used facilities. Do not close or obstruct walkways, corridors, or other occupied or used facilities without written permission from Owner and authorities having jurisdiction.
2. Provide not less than 72 hours' notice to Owner of activities that will affect Owner's operations.

1.11 WORK RESTRICTIONS

A. Comply with restrictions on construction operations.

1. Comply with limitations on use of public streets, work on public streets, rights of way, and other requirements of authorities having jurisdiction.

B. On-Site Work Hours: Limit work to between 7:00 a.m. to 11:00 p.m., Monday through Friday, unless otherwise indicated. Work hours may be modified to meet Project requirements if approved by Owner and authorities having jurisdiction.

1. Weekend Hours: Weekend hours are permitted at no additional cost to the Owner. Limit work to between 7:00 a.m. to 3:00 p.m.
2. Early Morning Hours: As approved by Owner and local authorities having jurisdiction and at no additional cost to Owner.
3. Work in Existing Building: No work shall occur within building during school hours .
4. Hours for Utility Shutdowns: Utilit Shutdowns must not occur during school hours while school is in session.

C. Existing Utility Interruptions: Do not interrupt utilities serving facilities occupied by Owner or others unless permitted under the following conditions and then only after arranging for temporary utility services according to requirements indicated:

1. Notify Construction Manager Owner not less than two days in advance of proposed utility interruptions.
2. Obtain Construction Manager's Owner's written permission before proceeding with utility interruptions.

D. Noise, Vibration, Dust, and Odors: Coordinate operations that may result in high levels of noise and vibration, dust, odors, or other disruption to Owner occupancy with Owner.

1. Notify Construction Manager Owner not less than two days in advance of proposed disruptive operations.
2. Obtain Construction Manager's Owner's written permission before proceeding with disruptive operations.

E. Smoking and Controlled Substance Restrictions: Use of tobacco products, alcoholic beverages, and other controlled substances on Project site is not permitted.

F. Employee Identification: identification tags for Contractor personnel working on Project site. Require personnel to use identification tags at all times.

1.12 SPECIFICATION AND DRAWING CONVENTIONS

A. Division 00 Contracting Requirements: General provisions of the Contract, including General and Supplementary Conditions, apply to all Sections of the Specifications.

B. Division 01 General Requirements: Requirements of Sections in Division 01 apply to the Work of all Sections in the Specifications.

C. Drawing Coordination: Requirements for materials and products identified on Drawings are described in detail in the Specifications. One or more of the following are used on Drawings to identify materials and products:

1. Terminology: Materials and products are identified by the typical generic terms used in the individual Specifications Sections.
2. Abbreviations: Materials and products are identified by abbreviations scheduled on Drawings and published as part of the U.S. National CAD Standard.

PART 2 - PRODUCTS (Not Used)

PART 3 - EXECUTION (Not Used)

END OF SECTION 011000

SECTION 011000 (TES) – SUMMARY

PART 1 - GENERAL

1.1 RELATED DOCUMENTS

A. Drawings and general provisions of the Contract, including General and Supplementary Conditions and other Division 01 Specification Sections, apply to this Section.

1.2 SUMMARY

A. **Section Includes the following information as it relates to Additions and Alterations at J. Fithian Tatem Elementary School**:

1. Project information.
2. Work covered by Contract Documents.
3. Owner-furnished/Contractor-installed (OFCI) products.
4. Owner-furnished/Owner-installed (OFOI) products.
5. Contractor's use of site and premises.
6. Coordination with occupants.
7. Work restrictions.
8. Specification and Drawing conventions.

B. Related Requirements:

1. Section 015000 "Temporary Facilities and Controls" for limitations and procedures governing temporary use of Owner's facilities.
2. Section 017300 "Execution" for coordination of Owner-installed products.

1.3 DEFINITIONS

A. Work Package: A group of specifications, drawings, and schedules prepared by the design team to describe a portion of the Project Work for pricing, permitting, and construction.

1.4 PROJECT INFORMATION

A. Project Identification: *Alterations & Additions To Tatem J. Fithian Elementary School*

1. Project Location:
   a. J. Fithian Tatem Elementary School: 1 Glover Ave., Haddonfield, NJ 08033.

B. Owner: Haddonfield Public Schools, United States.

1. Owner's Representative: Michael Catalano, School Business Administrator.

C. Architect: LAN Associates, E.P.A.S., Inc.

1. Architect's Representative: Jeffrey M. Potter, AIA.

D. Engineer: LAN Associates, E.P.A.S., Inc.

1. Mechanical, Electrical, Plumbing Engineering Representative: Thomas Wighard, PE

E. Construction Manager: Colliers Engineering & Design.

1. Construction Manager Representative: Richard Brown.

1.5 WORK COVERED BY CONTRACT DOCUMENTS

A. The Work of Project is defined by the Contract Documents and includes, but is not limited to, the following:

1. The scope of work for the Alterations at J.F. Tatem Elementary School includes but is not limited to: Alterations to convert an existing Library into multiple Classrooms including all new finishes, wall partitions, electrical power & lighting, suspended acoustic tile ceilings, and modifications & upgrades to the existing HVAC system. Work also includes the installation of a wall with door access for the existing nurse's suite, a renovation of the existing cafeteria kitchen and pantry, and addition of a new office within the existing music room.
2. The scope also includes the new construction of a two story media center and classroom addition. The addition includes a 2-story exterior stair. The addition will be freestanding and attached to the building through a connecting corridor on both stories with floor, wall and roof expansion joints. The exterior envelope will closely match the existing facade materiality of brick and will include the use of metal panels, and glass curtain wall.

B. Type of Contract:

1. Project will be constructed under a single prime contract.

1.6 WORK PERFORMED BY OWNER

A. Cooperate fully with Owner, so work may be carried out smoothly, without interfering with or delaying Work under this Contract or work by Owner. Coordinate the Work of this Contract with work performed by Owner.

B. Concurrent Work: Owner will perform the following construction operations at Project site. Those operations will be conducted simultaneously with Work under this Contract.

1. Information Technology integration.

C. Subsequent Work: Owner will perform the following additional work at site after Substantial Completion. Completion of that work will depend on successful completion of preparatory Work under this Contract.

1. Installation of loose furnishings and equipment.

1.7 OWNER-FURNISHED/CONTRACTOR-INSTALLED (OFCI) PRODUCTS

A. Owner's Responsibilities: Owner will furnish the products indicated and perform the following, as applicable:

1. Provide for delivery of Owner-furnished products to Project site.
2. Upon delivery, inspect, with Contractor present, delivered items.
   a. If Owner-furnished products are damaged, defective, or missing, arrange for replacement.
3. Obtain manufacturer's inspections, service, and warranties.
4. Inform Contractor of earliest available delivery date for Owner-furnished products.

B. Contractor's Responsibilities: The Work includes the following, as applicable:

1. Designate delivery dates of Owner-furnished products in Contractor's construction schedule, utilizing Owner-furnished earliest available delivery dates.
2. Receive, unload, handle, store, protect, and install Owner-furnished products.
3. Protect Owner-furnished products from damage during storage, handling, and installation and prior to Substantial Completion.

C. Owner-Furnished/Contractor-Installed (OFCI) Products:

1. Soap Dispensers.
2. Toilet Paper Dispensers.
3. Paper Towel Dispensers.
4. Sanitary Napkin Dispensers.

1.8 OWNER-FURNISHED/OWNER-INSTALLED (OFOI) PRODUCTS

A. The Owner will furnish and install products indicated.

B. Owner-Furnished/Owner-Installed (OFOI) Products:

1. Loose furniture and equipment.
2. Food Service Equipment
   a. Note: See Section 114000 (TES) for contractor’s responsibilities related to food service equipment infrastructure.
3. Low-Voltage Electrical Devices (i.e. Security cameras, Door Access Control, Wireless Access Portals IT Racks and Wiring).

1.9 CONTRACTOR'S USE OF SITE AND PREMISES

A. Limits on Use of Site: Limit use of Project site to Work in areas indicated. Do not disturb portions of Project site beyond areas in which the Work is indicated.

1. Driveways, Walkways and Entrances: Keep driveways loading areas, and entrances serving premises clear and available to Owner, Owner's employees, and emergency vehicles at all times. Do not use these areas for parking or for storage of materials.
   a. Schedule deliveries to minimize use of driveways and entrances by construction operations.
   b. Schedule deliveries to minimize space and time requirements for storage of materials and equipment on-site.

B. Condition of Existing Building: Maintain portions of existing building affected by construction operations in a weathertight condition throughout construction period. Repair damage caused by construction operations.

C. Condition of Existing Grounds: Maintain portions of existing grounds, landscaping, and hardscaping affected by construction operations throughout construction period. Repair damage caused by construction operations.

1.10 COORDINATION WITH OCCUPANTS

A. Partial Owner Occupancy: Owner will occupy the premises during entire construction period, with the exception of areas under construction. Cooperate with Owner during construction operations to minimize conflicts and facilitate Owner usage. Perform the Work so as not to interfere with Owner's operations. Maintain existing exits unless otherwise indicated.

1. Maintain access to existing walkways, corridors, and other adjacent occupied or used facilities. Do not close or obstruct walkways, corridors, or other occupied or used facilities without written permission from Owner and authorities having jurisdiction.
2. Provide not less than 72 hours' notice to Owner of activities that will affect Owner's operations.

1.11 WORK RESTRICTIONS

A. Comply with restrictions on construction operations.

1. Comply with limitations on use of public streets, work on public streets, rights of way, and other requirements of authorities having jurisdiction.

B. On-Site Work Hours: Limit work to between 7:00 a.m. to 11:00 p.m., Monday through Friday, unless otherwise indicated. Work hours may be modified to meet Project requirements if approved by Owner and authorities having jurisdiction.

1. Weekend Hours: Weekend hours are permitted at no additional cost to the Owner. Limit work to between 7:00 a.m. to 3:00 p.m.
2. Early Morning Hours: As approved by Owner and local authorities having jurisdiction and at no additional cost to Owner.
3. Work in Existing Building: No work shall occur within building during school hours .
4. Hours for Utility Shutdowns: Utilit Shutdowns must not occur during school hours while school is in session.

C. Existing Utility Interruptions: Do not interrupt utilities serving facilities occupied by Owner or others unless permitted under the following conditions and then only after arranging for temporary utility services according to requirements indicated:

1. Notify Construction Manager Owner not less than two days in advance of proposed utility interruptions.
2. Obtain Construction Manager's Owner's written permission before proceeding with utility interruptions.

D. Noise, Vibration, Dust, and Odors: Coordinate operations that may result in high levels of noise and vibration, dust, odors, or other disruption to Owner occupancy with Owner.

1. Notify Construction Manager Owner not less than two days in advance of proposed disruptive operations.
2. Obtain Construction Manager's Owner's written permission before proceeding with disruptive operations.

E. Smoking and Controlled Substance Restrictions: Use of tobacco products, alcoholic beverages, and other controlled substances on Project site is not permitted.

F. Employee Identification: identification tags for Contractor personnel working on Project site. Require personnel to use identification tags at all times.

1.12 SPECIFICATION AND DRAWING CONVENTIONS

A. Division 00 Contracting Requirements: General provisions of the Contract, including General and Supplementary Conditions, apply to all Sections of the Specifications.

B. Division 01 General Requirements: Requirements of Sections in Division 01 apply to the Work of all Sections in the Specifications.

C. Drawing Coordination: Requirements for materials and products identified on Drawings are described in detail in the Specifications. One or more of the following are used on Drawings to identify materials and products:

1. Terminology: Materials and products are identified by the typical generic terms used in the individual Specifications Sections.
2. Abbreviations: Materials and products are identified by abbreviations scheduled on Drawings and published as part of the U.S. National CAD Standard.

1.13 PHASING & STAGING

A. General: Refer to Sheet T0.06 – Staging and Phasing in conjunction with this section.

B. Phase I - Starting with issuance of Notice to Proceed, and ending June 22nd, 2027

1. All Work associated with the new two-story addition and associated sitework may proceed.
2. Because Phase I occurs during the school year, construction activities shall be restricted to the fenced work zone and approved staging and access areas. Contractor shall coordinate deliveries, equipment movements, disruptive operations, utility shutdowns, and any work affecting occupied areas with the Owner and Construction Manager so as not to interfere with school operations.

C. Phase II – Summer Work - June 22nd, 2027 through August 16th, 2027

1. All Work associated with the project may proceed.
2. All interior renovation work must be completed in this timeframe, except for Corridors 116.1 and 206 (Phase III) which depend on the completeness of the connection to the new addition.
   a. Provide a temporary barrier at opening between Corridor 116.1 and main first floor corridor at conclusion of Phase II.
   b. Provide a temporary barrier at the opening between Corridor 206 and Corridor 213 at conclusion of Phase II.

D. Phase III - From August 16th, 2027 through Substantial Completion (January 2028)

1. All remaining exterior addition, sitework, and connection work associated with Phases I and III may proceed, subject to school-year restrictions and required separations from occupied areas.

2. Because Phase III occurs during the school year, Contractor shall maintain temporary barriers, construction fencing, and controlled access as required to separate construction activities from students, staff, visitors, and occupied school areas. No work shall occur within occupied school areas during school hours unless specifically approved by the Owner.
3. Finalize connection from existing building to new addition at the conclusion of Phase III.
   a. Remove temporary barrier at opening between Corridor 116.1 and main first floor corridor at conclusion of Phase III.
   b. Remove temporary barrier at the opening between Corridor 206 and Corridor 213 at conclusion of Phase III.

E. Staging:

1. The Contractor may stage all construction material, storage boxes, dumpsters, worker parking, etc. in the existing outdoor play area indicated on the Staging Plan (T0.06).
2. Access to the Contractor staging area, material laydown area, dumpsters, worker parking, and designated construction delivery drop-off zone shall be through the adjacent School District property at 95 Grove Street, as indicated on the Staging Plan. Contractor shall coordinate use of this access with the Owner and shall not use alternate access routes without prior written approval.
3. Maintain construction fencing, gates, and secured separations around the work zone, staging area, and construction delivery drop-off zone as shown on Sheet T0.06. Fencing shall remain in place for the duration of each applicable phase and shall separate construction activities from students, staff, visitors, and occupied school areas.
4. If the Contractor proposes a staging, access, fencing, pedestrian protection, delivery, or phasing plan that differs from the arrangements shown on Sheet T0.06, Contractor shall submit the proposed alternate work plan to the Owner, Construction Manager, and Architect for review and approval before implementing the change.

F. Temporary Barriers / Partitions:

1. The Contractor shall provide a full height temporary barrier at the first floor opening between Corridor 116.1 and Corridor 117, and at the second floor opening between Corridor 206 and Corridor 213.to separate the Work Area from Student / Staff area.
2. Temporary Barriers shall be made of wood stud construction with painted plywood (student-side). Doors within partitions are optional.
3. Additional Notes:
   a. Utility shutdowns must not disrupt the school's operations.
   b. Overhead lifting may not occur over any occupied space.
   c. Contractor must restore all damaged asphalt, concrete, grass, etc. areas as a result of the Work.

G. Scheduling and Means and Methods to complete all Work during the required milestone dates is the responsibility of the Contractor. The Owner will permit all 2nd shift, weekend, and holiday Work at no additional cost to the Owner.

PART 2 - PRODUCTS (Not Used)

PART 3 - EXECUTION (Not Used)

END OF SECTION 011000

SECTION 012100 - ALLOWANCES

PART 1 - GENERAL

1.1 RELATED DOCUMENTS

A. Drawings and general provisions of the Contract, including General and Supplementary Conditions and other Division 01 Specification Sections, apply to this Section.

1.2 SUMMARY

A. Section includes administrative and procedural requirements governing allowances.

B. Types of allowances include the following:

1. Lump-sum allowances.

C. Related Requirements:

1. Section 012600 "Contract Modification Procedures" for procedures for submitting and handling Change Orders.

1.3 DEFINITIONS

A. Allowance: A quantity of work or dollar amount included in the Contract, established in lieu of additional requirements, used to defer selection of actual materials and equipment to a later date when direction will be provided to Contractor. If necessary, additional requirements will be issued by Change Order.

1.4 ACTION SUBMITTALS

A. Submit proposals for purchase of products or systems included in allowances in the form specified for Change Orders.

1.5 INFORMATIONAL SUBMITTALS

A. Submit invoices or delivery slips to show actual quantities of materials delivered to the site for use in fulfillment of each allowance.

B. Submit time sheets and other documentation to show labor time and cost for installation of allowance items that include installation as part of the allowance.

C. Coordinate and process submittals for allowance items in same manner as for other portions of the Work.

1.6 LUMP-SUM ALLOWANCES

A. Allowance shall include cost to Contractor of specific products and materials ordered by Owner or selected by Architect under allowance and shall include taxes, freight and delivery to Project site.

B. Unless otherwise indicated, Contractor's costs for receiving and handling at Project site, labor, installation, overhead and profit, and similar costs related to products and materials ordered by Owner or selected by Architect under allowance shall be included as part of the Contract Sum and not part of the allowance.

C. Unused Materials: Return unused materials purchased under an allowance to manufacturer or supplier for credit to Owner, after installation has been completed and accepted.

1. If requested by Architect, retain and prepare unused material for storage by Owner. Deliver unused material to Owner's storage space as directed.

PART 2 - PRODUCTS (Not Used)

PART 3 - EXECUTION

3.1 EXAMINATION

A. Examine products covered by an allowance promptly on delivery for damage or defects. Return damaged or defective products to manufacturer for replacement.

3.2 PREPARATION

A. Coordinate materials and their installation for each allowance with related materials and installations to ensure that each allowance item is completely integrated and interfaced with related work.

3.3 SCHEDULE OF ALLOWANCES

A. Allowance No. 1 – Contract #25.10 - Lump-Sum Allowance at Tatem Elementary: Include the sum of $**175,000.00** for unforeseen conditions uncovered during the Work described by the Contract Documents at 1 Glover Ave, Haddonfield, NJ 08033, and Work at that location not specifically indicated in the Contract Documents.

1. This allowance includes material, receiving, handling, and installation costs, and Contractor overhead and profit.

B. Allowance No. 2 – Contract #25.14 - Lump-Sum Allowance at Hopkins Gymnasium: Include the sum of $**125,000.00** for unforeseen conditions uncovered during the Work described by the

Contract Documents at 401 Kings Highway East, Haddonfield, NJ 08033, and Work at that location not specifically indicated in the Contract Documents.

1. This allowance includes material, receiving, handling, and installation costs, and Contractor overhead and profit.

END OF SECTION 012100

SECTION 012200 - UNIT PRICES

PART 1 - GENERAL

1.1 RELATED DOCUMENTS

A. Drawings and general provisions of the Contract, including General and Supplementary Conditions and other Division 01 Specification Sections, apply to this Section.

1.2 SUMMARY

A. The section includes administrative and procedural requirements for unit prices.

B. Related Requirements:

1. Section 012600 "Contract Modification Procedures" for procedures for submitting and handling Change Orders.

1.3 DEFINITIONS

A. Unit price is an amount incorporated into the Agreement, applicable during the duration of the Work as a price per unit of measurement for materials, equipment, or services, or a portion of the Work, added to or deducted from the Contract Sum by appropriate modification, if the scope of Work or estimated quantities of Work required by the Contract Documents are increased or decreased.

1.4 PROCEDURES

A. Unit prices include all necessary material, plus cost for delivery, installation, insurance, overhead, and profit.

B. Measurement and Payment: See individual Specification Sections for work that requires establishment of unit prices. Methods of measurement and payment for unit prices are specified in those Sections.

C. Owner reserves the right to reject Contractor's measurement of work-in-place that involves use of established unit prices and to have this work measured, at Owner's expense, by an independent surveyor acceptable to Contractor.

D. List of Unit Prices: A schedule of unit prices is included in Part 3. Specification Sections referenced in the Part 3 "Schedule of Unit Prices" Article contain requirements for materials described under each unit price.

PART 2 - PRODUCTS (Not Used)

PART 3 - EXECUTION

3.1 SCHEDULE OF UNIT PRICES

A. Refer to Bid Form:

Unit Price #1: Selective Asphalt Sub-Base Repair

1. Description: Select repair of existing sub-base areas as identified by the Engineer including but not limited to sawcutting, removal and disposal of base course pavement, excavation, removal and disposal of existing sub-base material, geotextile fabric, placement and compaction of dense graded aggregate, etc. Refer to Detail #8 on Drawing Sheet C9.02 and Specification Section 321216. Contractor must notify Engineer if areas in need of repair that have not been identified are discovered during the mill and repave/resurface process and obtain approval for repair.

2. Unit of Measurement: $/SF.

Unit Price #2: Selective Asphalt Base Course Repair

1. Description: Select repair of existing sub-base areas as identified by the Engineer including but not limited to sawcutting, removal and disposal of base course pavement, excavation, removal and disposal of existing sub-base material, geotextile fabric, placement and compaction of dense graded aggregate, etc. Refer to Detail #8 on Drawing Sheet C9.02 and Specification Section 321216. Contractor must notify Engineer if areas in need of repair that have not been identified are discovered during the mill and repave/resurface process and obtain approval for repair.

2. Unit of Measurement: $/SF.

END OF SECTION 012200

SECTION 012300 - ALTERNATES

PART 1 - GENERAL

1.1 RELATED DOCUMENTS

A. Drawings and general provisions of the Contract, including General and Supplementary Conditions and other Division 01 Specification Sections, apply to this Section.

1.2 SUMMARY

A. Section includes administrative and procedural requirements for alternates.

1.3 DEFINITIONS

A. Alternate: An amount proposed by bidders and stated on the Bid Form for certain work defined in the bidding requirements that may be added to or deducted from the base bid amount if the Owner decides to accept a corresponding change either in the amount of construction to be completed or in the products, materials, equipment, systems, or installation methods described in the Contract Documents.

1. Alternates described in this Section are part of the Work only if enumerated in the Agreement.
2. The cost or credit for each alternate is the net addition to or deduction from the Contract Sum to incorporate alternates into the Work. No other adjustments are made to the Contract Sum.

1.4 PROCEDURES

A. Coordination: Revise or adjust affected adjacent work as necessary to completely integrate work of the alternate into Project.

1. Include, as part of each alternate, miscellaneous devices, accessory objects, and similar items incidental to or required for a complete installation, whether or not indicated as part of alternate.

B. Execute accepted alternates under the same conditions as other Work of the Contract.

PART 2 - PRODUCTS (Not Used)

PART 3 - EXECUTION

3.1 SCHEDULE OF ALTERNATES

1. Alternate No. 1 (NHG): ADD Alternate – New Hopkins Gymnasium Landscaping

   a. Base Bid: Provide and install all landscaping and plantings as shown in drawing L1.01.

   b. Alternate: Provide the amount to be added to the Base Bid for furnishing and installing all plantings identified with callout “Add Alternate” on Drawing L1.01. All plantings not identified with callout “Add Alternate” shall remain in the Base Bid scope of work.

2. Alternate No. 2 (NHG): ADD Alternate – New Hopkins Gymnasium Existing Fencing Restoration

   a. Provide the amount to be added to the Base Bid for the restoration of the existing decorative steel fence located adjacent to the High School Stadium. Restoration includes straightening the posts & decorative bars, scraping, sanding, priming and painting with 3 mil. black coating.

END OF SECTION 012300

SECTION 012500 - SUBSTITUTION PROCEDURES

PART 1 - GENERAL

1.1 RELATED DOCUMENTS

A. Drawings and general provisions of the Contract, including General and Supplementary Conditions and other Division 01 Specification Sections, apply to this Section.

1.2 SUMMARY

A. Section includes administrative and procedural requirements for substitutions.

B. Related Requirements:

1. Document 002600 "Procurement Substitution Procedures" for requirements for substitution requests prior to award of Contract.
2. Section 012100 "Allowances" for products selected under an allowance.

1.3 DEFINITIONS

A. Substitutions: Changes in products, materials, equipment, and methods of construction from those required by the Contract Documents.

1. Substitutions for Cause: Changes proposed by Contractor that are required due to changed Project conditions, such as unavailability of product, regulatory changes, or unavailability of required warranty terms.
2. Substitutions for Convenience: Changes proposed by Contractor or Owner that are not required to meet other Project requirements but may offer advantage to Contractor or Owner.

B. Build America, Buy America Act (BABAA): Requirements instituted by the Bipartisan Infrastructure Law of 2021 mandating domestic preference that all iron and steel, manufactured products, and construction materials are produced in the United States.

1.4 ACTION SUBMITTALS

A. Substitution Requests: Submit documentation identifying product or fabrication or installation method to be replaced. Include Specification Section number and title and Drawing numbers and titles.

1. Documentation: Show compliance with requirements for substitutions and the following, as applicable:
   a. Statement indicating why specified product or fabrication or installation method cannot be provided, if applicable.
   b. Coordination of information, including a list of changes or revisions needed to other parts of the Work and to construction performed by Owner and separate contractors that will be necessary to accommodate proposed substitution.

c. Detailed comparison of significant qualities of proposed substitutions with those of the Work specified. Include annotated copy of applicable Specification Section. Significant qualities may include attributes, such as performance, weight, size, durability, visual effect, sustainable design characteristics, warranties, and specific features and requirements indicated. Indicate deviations, if any, from the Work specified.
d. Product Data, including drawings and descriptions of products and fabrication and installation procedures.
e. Samples, where applicable or requested.
f. Certificates and qualification data, where applicable or requested.
g. List of similar installations for completed projects, with project names and addresses as well as names and addresses of architects and owners.
h. Material test reports from a qualified testing agency, indicating and interpreting test results for compliance with requirements indicated.
i. Detailed comparison of Contractor's construction schedule using proposed substitutions with products specified for the Work, including effect on the overall Contract Time. If specified product or method of construction cannot be provided within the Contract Time, include letter from manufacturer, on manufacturer's letterhead, stating date of receipt of purchase order, lack of availability, or delays in delivery.
j. Cost information, including a proposal of change, if any, in the Contract Sum.
k. Contractor's certification that proposed substitution complies with requirements in the Contract Documents, except as indicated in substitution request, is compatible with related materials and is appropriate for applications indicated.
l. Contractor's waiver of rights to additional payment or time that may subsequently become necessary because of failure of proposed substitution to produce indicated results.
m. Manufacturer's Certification, certifying that the items provided by Manufacturer meet the domestic preference requirements of BABAA.
n. Submit all substitution documentation electronically in PDF format via the designated project management portal.

2. Architect's Action: If necessary, Architect will request additional information or documentation for evaluation within seven days of receipt of a request for substitution. Architect will notify Contractor of acceptance or rejection of proposed substitution within 15 days of receipt of request, or seven days of receipt of additional information or documentation, whichever is later.
   a. Forms of Acceptance: Change Order, Construction Change Directive, or Architect's Supplemental Instructions for minor changes in the Work.
   b. Use product specified if Architect does not issue a decision on use of a proposed substitution within time allocated.

1.5 QUALITY ASSURANCE

A. Compatibility of Substitutions: Investigate and document compatibility of proposed substitution with related products and materials. Engage a qualified testing agency to perform compatibility tests recommended by manufacturers.

1.6 PROCEDURES

A. Coordination: Revise or adjust affected work as necessary to integrate work of the approved substitutions.

1.7 SUBSTITUTIONS

A. Substitutions for Cause: Submit requests for substitution immediately on discovery of need for change, but not later than 15 days prior to time required for preparation and review of related submittals.

1. Conditions: Architect will consider Contractor's request for substitution when the following conditions are satisfied. If the following conditions are not satisfied, Architect will return requests without action, except to record noncompliance with these requirements:
   a. Requested substitution is consistent with the Contract Documents and will produce indicated results.
   b. Substitution request is fully documented and properly submitted.
   c. Requested substitution will not adversely affect Contractor's construction schedule.
   d. Requested substitution has received necessary approvals of authorities having jurisdiction.
   e. Requested substitution is compatible with other portions of the Work.
   f. Requested substitution has been coordinated with other portions of the Work.
   g. Requested substitution provides specified warranty.
   h. If requested substitution involves more than one contractor, requested substitution has been coordinated with other portions of the Work, is uniform and consistent, is compatible with other products, and is acceptable to all contractors involved.

B. Substitutions for Convenience: Architect will consider requests for substitution if received within 60 days after the Notice of Award. Requests received after that time may be considered or rejected at discretion of Architect.

1. Conditions: Architect will consider Contractor's request for substitution when the following conditions are satisfied. If the following conditions are not satisfied, Architect will return requests without action, except to record noncompliance with these requirements:
   a. Requested substitution offers Owner a substantial advantage in cost, time, energy conservation, or other considerations, after deducting additional responsibilities Owner must assume. Owner's additional responsibilities may include compensation to Architect for redesign and evaluation services, increased cost of other construction by Owner, and similar considerations.
   b. Requested substitution does not require extensive revisions to the Contract Documents.
   c. Requested substitution is consistent with the Contract Documents and will produce indicated results.
   d. Substitution request is fully documented and properly submitted.
   e. Requested substitution will not adversely affect Contractor's construction schedule.
   f. Requested substitution has received necessary approvals of authorities having jurisdiction.
   g. Requested substitution is compatible with other portions of the Work.
   h. Requested substitution has been coordinated with other portions of the Work.
   i. Requested substitution provides specified warranty.
   j. If requested substitution involves more than one contractor, requested substitution has been coordinated with other portions of the Work, is uniform and consistent, is compatible with other products, and is acceptable to all contractors involved.

PART 2 - PRODUCTS (Not Used)

PART 3 - EXECUTION (Not Used)

END OF SECTION 012500

SECTION 012600 - CONTRACT MODIFICATION PROCEDURES

PART 1 - GENERAL

1.1 RELATED DOCUMENTS

A. Drawings and general provisions of the Contract, including General and Supplementary Conditions and other Division 01 Specification Sections, apply to this Section.

1.2 SUMMARY

A. Section includes administrative and procedural requirements for handling and processing Contract modifications.

B. Related Requirements:

1. Section 012500 "Substitution Procedures" for administrative procedures for handling requests for substitutions made after the Contract award.
2. Section 013100 "Project Management and Coordination" for requirements for forms for contract modifications provided as part of web-based Project management software.

1.3 MINOR CHANGES IN THE WORK

A. Architect will issue supplemental instructions authorizing minor changes in the Work, not involving adjustment to the Contract Sum or the Contract Time, on AIA Document G710.

1.4 PROPOSAL REQUESTS

A. Owner-Initiated Proposal Requests: Architect will issue a detailed description of proposed changes in the Work that may require adjustment to the Contract Sum or the Contract Time. If necessary, the description will include supplemental or revised Drawings and Specifications.

1. Work Change Proposal Requests issued by Architect are not instructions either to stop work in progress or to execute the proposed change.
2. Within time specified in Proposal Request or 10 days, when not otherwise specified after receipt of Proposal Request, submit a quotation estimating cost adjustments to the Contract Sum and the Contract Time necessary to execute the change.
   a. Include a list of quantities of products required or eliminated and unit costs, with total amount of purchases and credits to be made. If requested, furnish survey data to substantiate quantities.
   b. Indicate applicable taxes, delivery charges, equipment rental, and amounts of trade discounts.
   c. Include costs of labor and supervision directly attributable to the change.
   d. Include an updated Contractor's construction schedule that indicates the effect of the change, including, but not limited to, changes in activity duration, start and finish times, and activity relationship. Use available total float before requesting an extension of the Contract Time.
   e. Quotation Form: Use forms acceptable to Architect.

B. Contractor-Initiated Proposals: If latent or changed conditions require modifications to the Contract, Contractor may initiate a claim by submitting a request for a change to Architect.

1. Include a statement outlining reasons for the change and the effect of the change on the Work. Provide a complete description of the proposed change. Indicate the effect of the proposed change on the Contract Sum and the Contract Time.
2. Include a list of quantities of products required or eliminated and unit costs, with total amount of purchases and credits to be made. If requested, furnish survey data to substantiate quantities.
3. Indicate applicable taxes, delivery charges, equipment rental, and amounts of trade discounts.
4. Include costs of labor and supervision directly attributable to the change.
5. Include an updated Contractor's construction schedule that indicates the effect of the change, including, but not limited to, changes in activity duration, start and finish times, and activity relationship. Use available total float before requesting an extension of the Contract Time.
6. Comply with requirements in Section 012500 "Substitution Procedures" if the proposed change requires substitution of one product or system for product or system specified.
7. Proposal Request Form: Use form acceptable to Architect.

1.5 ADMINISTRATIVE CHANGE ORDERS

A. Allowance Adjustment: See Section 012100 "Allowances" for administrative procedures for preparation of Change Order Proposal for adjusting the Contract Sum to reflect actual costs of allowances.

1.6 CHANGE ORDER PROCEDURES

A. On Owner's approval of a Work Change Proposal Request, Architect will issue a Change Order for signatures of Owner and Contractor on AIA Document G701.

1.7 CONSTRUCTION CHANGE DIRECTIVE

A. Construction Change Directive: Architect may issue a Construction Change Directive on AIA Document G714. Construction Change Directive instructs Contractor to proceed with a change in the Work, for subsequent inclusion in a Change Order.

1. Construction Change Directive contains a complete description of change in the Work. It also designates method to be followed to determine change in the Contract Sum or the Contract Time.

B. Documentation: Maintain detailed records on a time and material basis of work required by the Construction Change Directive.

1. After completion of change, submit an itemized account and supporting data necessary to substantiate cost and time adjustments to the Contract.

PART 2 - PRODUCTS (Not Used)

PART 3 - EXECUTION (Not Used)

END OF SECTION 012600

SECTION 012900 - PAYMENT PROCEDURES

PART 1 - GENERAL

1.1 RELATED DOCUMENTS

A. Drawings and general provisions of the Contract, including General and Supplementary Conditions and other Division 01 Specification Sections, apply to this Section.

1.2 SUMMARY

A. Section includes administrative and procedural requirements necessary to prepare and process Applications for Payment.

B. Related Requirements:

1. Section 012100 "Allowances" for procedural requirements governing the handling and processing of allowances.
2. Section 012600 "Contract Modification Procedures" for administrative procedures for handling changes to the Contract.
3. Section 013200 "Construction Progress Documentation" for administrative requirements governing the preparation and submittal of the Contractor's construction schedule.

1.3 SCHEDULE OF VALUES

A. Coordination: Coordinate preparation of the schedule of values with preparation of Contractor's construction schedule.

1. Coordinate line items in the schedule of values with items required to be indicated as separate activities in Contractor's construction schedule.
2. Submit the schedule of values to Architect at earliest possible date, but no later than 14 days before the date scheduled for submittal of initial Applications for Payment.

B. Format and Content: Use Project Manual table of contents as a guide to establish line items for the schedule of values. Provide at least one line item for each Specification Section.

1. Submit electronically in both PDF and editable Excel format.
2. Identification: Include the following Project identification on the schedule of values:
   a. Project name and location.
   b. Owner's name.
   c. Owner's Project number.
   d. Name of Architect.
   e. Architect's Project number.
   f. Contractor's name and address.
   g. Date of submittal.
3. Arrange schedule of values consistent with format of AIA Document G703 EJCDC Document C-620.
4. Arrange the schedule of values in tabular form, with separate columns to indicate the following for each item listed:

a. Related Specification Section or division.
b. Description of the Work.
c. Name of subcontractor.
d. Name of manufacturer or fabricator.
e. Name of supplier.
f. Change Orders (numbers) that affect value.
g. Dollar value of the following, as a percentage of the Contract Sum to nearest one-hundredth percent, adjusted to total 100 percent. Round dollar amounts to whole dollars, with total equal to Contract Sum.
    1) Labor.
    2) Materials.
    3) Equipment.

5. Provide a breakdown of the Contract Sum in enough detail to facilitate continued evaluation of Applications for Payment and progress reports. Provide multiple line items for principal subcontract amounts in excess of five percent of the Contract Sum.
6. Provide a separate line item in the schedule of values for each part of the Work where Applications for Payment may include materials or equipment purchased or fabricated and stored, but not yet installed.
    a. Differentiate between items stored on-site and items stored off-site.
7. Allowances: Provide a separate line item in the schedule of values for each allowance. Show line-item value of unit-cost allowances, as a product of the unit cost, multiplied by measured quantity. Use information indicated in the Contract Documents to determine quantities.
8. Temporary Facilities: Show cost of temporary facilities and other major cost items that are not direct cost of actual work-in-place as separate line items.
9. Closeout Costs. Include separate line items under Contractor and principal subcontracts for Project closeout requirements in an amount totaling five percent of the Contract Sum and subcontract amount.
10. Schedule of Values Revisions: Revise the schedule of values when Change Orders or Construction Change Directives result in a change in the Contract Sum. Include at least one separate line item for each Change Order and Construction Change Directive.

1.4 APPLICATIONS FOR PAYMENT

A. Each Application for Payment following the initial Application for Payment shall be consistent with previous applications and payments, as certified by Architect and paid for by Owner.

B. Payment Application Times: The date for each progress payment is indicated in the Owner/Contractor Agreement. The period of construction work covered by each Application for Payment is the period indicated in the Agreement.

    1. If no date is identified, submit on the 25th day of each month for work completed through the 20th.

C. Application for Payment Forms: Use AIA Document G702 and AIA Document G703 as form for Applications for Payment.

D. Application Preparation: Complete every entry on form. Notarize and execute by a person authorized to sign legal documents on behalf of Contractor. Architect will return incomplete applications without action.

    1. Entries shall match data on the schedule of values and Contractor's construction schedule. Use updated schedules if revisions were made.

2. Include amounts for work completed following previous Application for Payment, whether or not payment has been received. Include only amounts for work completed at time of Application for Payment.
3. Include amounts of Change Orders and Construction Change Directives issued before last day of construction period covered by application.
4. Indicate separate amounts for work being carried out under Owner-requested project acceleration.

E. Stored Materials: Include in Application for Payment amounts applied for materials or equipment purchased or fabricated and stored, but not yet installed. Differentiate between items stored on-site and items stored off-site.

1. Provide certificate of insurance, evidence of transfer of title to Owner, and consent of surety to payment for stored materials.
2. Provide supporting documentation that verifies amount requested, such as paid invoices. Match amount requested with amounts indicated on documentation; do not include overhead and profit on stored materials.
3. Provide summary documentation for stored materials indicating the following:
   a. Value of materials previously stored and remaining stored as of date of previous Applications for Payment.
   b. Value of previously stored materials put in place after date of previous Application for Payment and on or before date of current Application for Payment.
   c. Value of materials stored since date of previous Application for Payment and remaining stored as of date of current Application for Payment.

F. Transmittal: Submit three signed and notarized original copies of each Application for Payment to Architect by a method ensuring receipt within 24 hours. One copy shall include waivers of lien and similar attachments if required.

1. Transmit each copy with a transmittal form listing attachments and recording appropriate information about application.
2. Applications submitted without required documentation or received after the deadline may be deferred to the next pay period at Architect's discretion.

G. Initial Application for Payment: Administrative actions and submittals that must precede or coincide with submittal of first Application for Payment include the following:

1. List of subcontractors.
2. Schedule of values.
3. Contractor's construction schedule (preliminary if not final).
4. Products list (preliminary if not final).
5. Sustainable design action plans, including preliminary project materials cost data.
6. Schedule of unit prices.
7. Submittal schedule (preliminary if not final).
8. List of Contractor's staff assignments.
9. List of Contractor's principal consultants.
10. Copies of building permits.
11. Copies of authorizations and licenses from authorities having jurisdiction for performance of the Work.
12. Initial progress report.
13. Report of preconstruction conference.

H. Application for Payment at Substantial Completion: After Architect issues the Certificate of Substantial Completion, submit an Application for Payment showing 100 percent completion for portion of the Work claimed as substantially complete.

1. Include documentation supporting claim that the Work is substantially complete and a statement showing an accounting of changes to the Contract Sum.
    a. Complete administrative actions, submittals, and Work preceding this application, as described in Section 017700 "Closeout Procedures."
2. This application shall reflect Certificate(s) of Substantial Completion issued previously for Owner occupancy of designated portions of the Work.

I. Final Payment Application: After completing Project closeout requirements, submit final Application for Payment with releases and supporting documentation not previously submitted and accepted, including, but not limited, to the following:

1. Evidence of completion of Project closeout requirements.
2. Certification of completion of final punch list items.
3. Insurance certificates for products and completed operations where required and proof that taxes, fees, and similar obligations were paid.
4. Updated final statement, accounting for final changes to the Contract Sum.
5. AIA Document G706.
6. AIA Document G706A.
7. AIA Document G707.
8. Evidence that claims have been settled.
9. Final liquidated damages settlement statement.
10. Proof that taxes, fees, and similar obligations are paid.
11. Waivers and releases.
12. Deliver all as-built drawings, O&M manuals, warranties, and record specifications in both hard copy and digital formats concurrent with final Application for Payment.

PART 2 - PRODUCTS (Not Used)

PART 3 - EXECUTION (Not Used)

END OF SECTION 012900

SECTION 013100 - PROJECT MANAGEMENT AND COORDINATION

PART 1 - GENERAL

1.1 RELATED DOCUMENTS

A. Drawings and general provisions of the Contract, including General and Supplementary Conditions and other Division 01 Specification Sections, apply to this Section.

1.2 SUMMARY

A. Section includes administrative provisions for coordinating construction operations on Project, including, but not limited to, the following:

1. General coordination procedures.
2. Coordination drawings.
3. RFIs.
4. Digital project management procedures.
5. Project meetings.

B. Related Requirements:

1. Section 013200 "Construction Progress Documentation" for preparing and submitting Contractor's construction schedule.
2. Section 017300 "Execution" for procedures for coordinating general installation and field-engineering services, including establishment of benchmarks and control points.
3. Section 017700 "Closeout Procedures" for coordinating closeout of the Contract.

1.3 DEFINITION

A. RFI: Request for Information. Request from Owner, Architect, or Contractor seeking information required by or clarifications of the Contract Documents.

1.4 INFORMATIONAL SUBMITTALS

A. Subcontract List: Prepare a written summary identifying individuals or firms proposed for each portion of the Work, including those who are to furnish products or equipment fabricated to a special design. Include the following information in tabular form:

1. Name, address, telephone number, and email address of entity performing subcontract or supplying products.
2. Number and title of related Specification Section(s) covered by subcontract.
3. Drawing number and detail references, as appropriate, covered by subcontract.

B. Key Personnel Names: Within 15 days of starting construction operations, submit a list of key personnel assignments, including superintendent and other personnel in attendance at Project site. Identify individuals and their duties and responsibilities; list addresses, cellular telephone

numbers, and e-mail addresses. Provide names, addresses, and telephone numbers of individuals assigned as alternates in the absence of individuals assigned to Project.

1.5 GENERAL COORDINATION PROCEDURES

A. Coordination: Coordinate construction operations included in different Sections of the Specifications to ensure efficient and orderly installation of each part of the Work. Coordinate construction operations included in different Sections that depend on each other for proper installation, connection, and operation.

1. Schedule construction operations in sequence required to obtain the best results, where installation of one part of the Work depends on installation of other components, before or after its own installation.
2. Coordinate installation of different components to ensure maximum performance and accessibility for required maintenance, service, and repair.
3. Make adequate provisions to accommodate items scheduled for later installation.
4. Prepare coordination drawings in accordance with Section 013300 'Submittal Procedures' to resolve spatial conflicts between building systems and structure prior to installation

B. Prepare memoranda for distribution to each party involved, outlining special procedures required for coordination. Include such items as required notices, reports, and list of attendees at meetings.

1. Prepare similar memoranda for Owner and separate contractors if coordination of their Work is required.

1.6 REQUEST FOR INFORMATION (RFI)

A. General: Immediately on discovery of the need for additional information, clarification, or interpretation of the Contract Documents, Contractor shall prepare and submit an RFI in the form specified.

1. Architect will return without response those RFIs submitted to Architect by other entities controlled by Contractor.
2. Coordinate and submit RFIs in a prompt manner to avoid delays in Contractor's work or work of subcontractors.

B. Content of the RFI: Include a detailed, legible description of item needing information or interpretation and the following:

1. Project name.
2. Owner name.
3. Owner's Project number.
4. Name of Architect.
5. Architect's Project number.
6. Date.
7. Name of Contractor.
8. RFI number, numbered sequentially.
9. RFI subject.

10. Specification Section number and title and related paragraphs, as appropriate.
11. Drawing number and detail references, as appropriate.
12. Field dimensions and conditions, as appropriate.
13. Contractor's suggested resolution. If Contractor's suggested resolution impacts the Contract Time or the Contract Sum, Contractor shall state impact in the RFI.
14. Contractor's signature.
15. Attachments: Include sketches, descriptions, measurements, photos, Product Data, Shop Drawings, coordination drawings, and other information necessary to fully describe items needing interpretation.
    a. Include dimensions, thicknesses, structural grid references, and details of affected materials, assemblies, and attachments on attached sketches.

C. RFI Forms: AIA Document G716.

1. Attachments shall be electronic files in PDF format.

D. Architect's Action: Architect will review each RFI, determine action required, and respond. Allow seven days for Architect's response for each RFI. RFIs received by Architect after 1:00 p.m. will be considered as received the following working day.

1. The following Contractor-generated RFIs will be returned without action:
    a. Requests for approval of submittals.
    b. Requests for approval of substitutions.
    c. Requests for approval of Contractor's means and methods.
    d. Requests for coordination information already indicated in the Contract Documents.
    e. Requests for adjustments in the Contract Time or the Contract Sum.
    f. Requests for interpretation of Architect's actions on submittals.
    g. Incomplete RFIs or inaccurately prepared RFIs.
2. Architect's action may include a request for additional information, in which case Architect's time for response will date from time of receipt by Architect of additional information.
3. Architect's action on RFIs that may result in a change to the Contract Time or the Contract Sum may be eligible for Contractor to submit Change Proposal according to Section 012600 "Contract Modification Procedures."
    a. If Contractor believes the RFI response warrants change in the Contract Time or the Contract Sum, notify Architect in writing within 5 days of receipt of the RFI response.

E. RFI Log: Prepare, maintain, and submit a tabular log of RFIs organized by the RFI number. Submit log bi-weekly.

1. Project name.
2. Name and address of Contractor.
3. Name and address of Architect.
4. RFI number, including RFIs that were returned without action or withdrawn.
5. RFI description.
6. Date the RFI was submitted.
7. Date Architect's response was received.
8. Identification of related Minor Change in the Work, Construction Change Directive, and Proposal Request, as appropriate.
9. Include in the RFI Log a column identifying whether each RFI response results in a potential change to the Contract Time or Contract Sum. The Contractor shall submit the updated log with each Application for Payment for review.

F. On receipt of Architect's action, update the RFI log and immediately distribute the RFI response to affected parties. Review response and notify Architect within seven days if Contractor disagrees with response.

1.7 DIGITAL PROJECT MANAGEMENT PROCEDURES

A. Architect's Data Files Not Available: Architect will not provide Architect's CAD drawing digital data files for Contractor's use during construction.

B. All digital correspondence, submittals, RFIs, and meeting minutes shall be transmitted through the Owner-approved web-based project management system (e.g., Procore or equivalent) once established.

1. Email submissions are acceptable if permitted by Owner’s Construction Manager, and must include Architect’s standard cover sheet.

C. PDF Document Preparation: Where PDFs are required to be submitted to Architect, prepare as follows:

1. Assemble complete submittal package into a single indexed file, incorporating submittal requirements of a single Specification Section and transmittal form with links enabling navigation to each item.
2. Name file with submittal number or other unique identifier, including revision identifier.
3. Certifications: Where digitally submitted certificates and certifications are required, provide a digital signature with digital certificate on where indicated.

1.8 PROJECT MEETINGS

A. General: Schedule and conduct meetings and conferences at Project site unless otherwise indicated.

1. Attendees: Inform participants and others involved, and individuals whose presence is required, of date and time of each meeting. Notify Owner and Architect of scheduled meeting dates and times a minimum of 10 working days prior to meeting.
2. Agenda: Prepare the meeting agenda. Distribute the agenda to all invited attendees.
3. Minutes: Entity responsible for conducting meeting will record significant discussions and agreements achieved. Distribute the meeting minutes to everyone concerned, including Owner and Architect, within three days of the meeting.

B. Preconstruction Conference: Architect will schedule and conduct a preconstruction conference before starting construction, at a time convenient to Owner and Architect, but no later than 15 days after execution of the Agreement.

1. Attendees: Authorized representatives of Owner Architect, and their consultants; Contractor and its superintendent; major subcontractors; suppliers; and other concerned parties shall attend the conference. Participants at the conference shall be familiar with Project and authorized to conclude matters relating to the Work.
2. Agenda: Discuss items of significance that could affect progress, including the following:
   a. Responsibilities and personnel assignments.
   b. Tentative construction schedule.
   c. Phasing.
   d. Critical work sequencing and long lead items.
   e. Designation of key personnel and their duties.

f. Lines of communications.
g. Use of web-based Project software.
h. Procedures for processing field decisions and Change Orders.
i. Procedures for RFIs.
j. Procedures for testing and inspecting.
k. Procedures for processing Applications for Payment.
l. Distribution of the Contract Documents.
m. Submittal procedures.
n. Preparation of Record Documents.
o. Use of the premises and existing building.
p. Work restrictions.
q. Working hours.
r. Owner's occupancy requirements.
s. Responsibility for temporary facilities and controls.
t. Procedures for moisture and mold control.
u. Procedures for disruptions and shutdowns.
v. Construction waste management and recycling.
w. Parking availability.
x. Office, work, and storage areas.
y. Equipment deliveries and priorities.
z. First aid.
aa. Security.
bb. Progress cleaning.

3. Minutes: Entity responsible for conducting meeting will record and distribute meeting minutes.

C. Preinstallation Conferences: Conduct a preinstallation conference at Project site before each construction activity when required by other Sections and when required for coordination with other construction.

1. Attendees: Installer and representatives of manufacturers and fabricators involved in or affected by the installation and its coordination or integration with other materials and installations that have preceded or will follow, shall attend the meeting. Advise Architect of scheduled meeting dates.
2. Agenda: Review progress of other construction activities and preparations for the particular activity under consideration, including requirements for the following:
   a. Contract Documents.
   b. Options.
   c. Related RFIs.
   d. Related Change Orders.
   e. Purchases.
   f. Deliveries.
   g. Submittals.
   h. Sustainable design requirements.
   i. Review of mockups.
   j. Possible conflicts.
   k. Compatibility requirements.
   l. Time schedules.
   m. Weather limitations.
   n. Manufacturer's written instructions.
   o. Warranty requirements.
   p. Compatibility of materials.
   q. Acceptability of substrates.
   r. Temporary facilities and controls.
   s. Space and access limitations.
   t. Regulations of authorities having jurisdiction.

u. Testing and inspecting requirements.
v. Installation procedures.
w. Coordination with other work.
x. Required performance results.
y. Protection of adjacent work.
z. Protection of construction and personnel.

3. Record significant conference discussions, agreements, and disagreements, including required corrective measures and actions.
4. Reporting: Distribute minutes of the meeting to each party present and to other parties requiring information.
5. Do not proceed with installation if the conference cannot be successfully concluded. Initiate whatever actions are necessary to resolve impediments to performance of the Work and reconvene the conference at earliest feasible date.

D. Project Closeout Conference: Schedule and conduct a project closeout conference, at a time convenient to Owner and Architect, but no later than 30 days prior to the scheduled date of Substantial Completion.

1. Conduct the conference to review requirements and responsibilities related to Project closeout.
2. Attendees: Authorized representatives of Owner, Owner's Commissioning Authority, Architect, and their consultants; Contractor and its superintendent; major subcontractors; suppliers; and other concerned parties shall attend the meeting. Participants at the meeting shall be familiar with Project and authorized to conclude matters relating to the Work.
3. Agenda: Discuss items of significance that could affect or delay Project closeout, including the following:
   a. Preparation of Record Documents.
   b. Procedures required prior to inspection for Substantial Completion and for final inspection for acceptance.
   c. Procedures for completing and archiving web-based Project software site data files.
   d. Submittal of written warranties.
   e. Requirements for completing sustainable design documentation.
   f. Requirements for preparing operations and maintenance data.
   g. Requirements for delivery of material samples, attic stock, and spare parts.
   h. Requirements for demonstration and training.
   i. Preparation of Contractor's punch list.
   j. Procedures for processing Applications for Payment at Substantial Completion and for final payment.
   k. Submittal procedures.
   l. Coordination of separate contracts.
   m. Owner's partial occupancy requirements.
   n. Installation of Owner's furniture, fixtures, and equipment.
   o. Responsibility for removing temporary facilities and controls.
   p. Verification of submission status for all O&M manuals, warranties, training videos, and final as-built drawings, including electronic formats compatible with Owner’s record system.
4. Minutes: Entity conducting meeting will record and distribute meeting minutes.

E. Progress Meetings: Conduct progress meetings at biweekly intervals.

1. Progress meetings shall be conducted biweekly, or more frequently as required by the Architect or Owner. Contractor shall be responsible for preparing and distributing meeting invitations, agendas, and draft minutes within 24 hours of each meeting.

2. Attendees: In addition to representatives of Owner and Architect, each contractor, subcontractor, supplier, and other entity concerned with current progress or involved in planning, coordination, or performance of future activities shall be represented at these meetings. All participants at the meeting shall be familiar with Project and authorized to conclude matters relating to the Work.
3. Agenda: Review and correct or approve minutes of previous progress meeting. Review other items of significance that could affect progress. Include topics for discussion as appropriate to status of Project.
    a. Contractor's Construction Schedule: Review progress since the last meeting. Determine whether each activity is on time, ahead of schedule, or behind schedule, in relation to Contractor's construction schedule. Determine how construction behind schedule will be expedited; secure commitments from parties involved to do so. Discuss whether schedule revisions are required to ensure that current and subsequent activities will be completed within the Contract Time.
        1) Review schedule for next period.
    b. Review present and future needs of each entity present, including the following:
        1) Interface requirements.
        2) Sequence of operations.
        3) Status of submittals.
        4) Deliveries.
        5) Off-site fabrication.
        6) Access.
        7) Site use.
        8) Temporary facilities and controls.
        9) Progress cleaning.
        10) Quality and work standards.
        11) Status of correction of deficient items.
        12) Field observations.
        13) Status of RFIs.
        14) Status of Proposal Requests.
        15) Pending changes.
        16) Status of Change Orders.
        17) Pending claims and disputes.
        18) Documentation of information for payment requests.
4. Minutes: Entity responsible for conducting the meeting will record and distribute the meeting minutes to each party present and to parties requiring information.
    a. Schedule Updating: Revise Contractor's construction schedule after each progress meeting, where revisions to the schedule have been made or recognized. Issue revised schedule concurrently with the report of each meeting.

PART 2 - PRODUCTS (Not Used)

PART 3 - EXECUTION (Not Used)

END OF SECTION 013100

SECTION 013200 - CONSTRUCTION PROGRESS DOCUMENTATION

PART 1 - GENERAL

1.1 RELATED DOCUMENTS

A. Drawings and general provisions of the Contract, including General and Supplementary Conditions and other Division 01 Specification Sections, apply to this Section.

1.2 SUMMARY

A. Section includes administrative and procedural requirements for documenting the progress of construction during performance of the Work, including the following:

1. Contractor's Construction Schedule.
2. Construction schedule updating reports.
3. Daily construction reports.

B. Related Requirements:

1. Section 012900 "Payment Procedures" for schedule of values and requirements for use of cost-loaded schedule for Applications for Payment.

1.3 DEFINITIONS

A. Activity: A discrete part of a project that can be identified for planning, scheduling, monitoring, and controlling the construction Project. Activities included in a construction schedule consume time and resources.

1. Critical Activity: An activity on the critical path that must start and finish on the planned early start and finish times.
2. Predecessor Activity: An activity that precedes another activity in the network.
3. Successor Activity: An activity that follows another activity in the network.

B. Cost Loading: The allocation of the schedule of values for completing an activity as scheduled. The sum of costs for all activities must equal the total Contract Sum.

C. Critical Path: The longest connected chain of interdependent activities through the network schedule that establishes the minimum overall Project duration and contains no float.

D. Event: The starting or ending point of an activity.

E. Resource Loading: The allocation of manpower and equipment necessary for completing an activity as scheduled.

1.4 INFORMATIONAL SUBMITTALS

A. Format for Submittals: Submit required submittals in the following format:

1. Working electronic copy of schedule file.
2. PDF file.

B. Contractor's Construction Schedule: Initial schedule, of size required to display entire schedule for entire construction period.

1. Submit a working digital copy of schedule labeled to comply with requirements for submittals.
2. Submit the initial Contractor’s Construction Schedule within 21 calendar days after the Notice to Proceed. Architect will review for compliance with the Contract Documents, but approval shall not relieve the Contractor of responsibility for timely completion.

C. Construction Schedule Updating Reports: Submit with Applications for Payment.

1.5 COORDINATION

A. Coordinate Contractor's Construction Schedule with the schedule of values, submittal schedule, progress reports, payment requests, and other required schedules and reports.

1. Secure time commitments for performing critical elements of the Work from entities involved.
2. Coordinate each construction activity in the network with other activities, and schedule them in proper sequence.

1.6 CONTRACTOR'S CONSTRUCTION SCHEDULE

A. Computer Scheduling Software: Prepare schedules using current version of a program that has been developed specifically to manage construction schedules.

1. Acceptable software shall include Primavera P6, Microsoft Project, or other program capable of generating logic-driven critical path schedules with cost and resource loading. Spreadsheet-based or manually prepared schedules will not be accepted.

B. Time Frame: Extend schedule from date established for the Notice to Proceed to date of Final Completion.

1. Contract completion date shall not be changed by submission of a schedule that shows an early completion date, unless specifically authorized by Change Order.

C. Activities: Treat each floor or separate area as a separate numbered activity for each main element of the Work. Comply with the following:

1. Activity Duration: Define activities so no activity is longer than 20 days, unless specifically allowed by Architect.
2. Temporary Facilities: Indicate start and completion dates for the following as applicable:
   a. Securing of approvals and permits required for performance of the Work.
   b. Temporary facilities.
   c. Construction of mock-ups, prototypes and samples.
   d. Owner interfaces and furnishing of items.
   e. Interfaces with Separate Contracts.
   f. Regulatory agency approvals.
   g. Punch list.

3. Procurement Activities: Include procurement process activities for the following long lead-time items and major items, requiring a cycle of more than 60 days, as separate activities in schedule. Procurement cycle activities include, but are not limited to, submittals, approvals, purchasing, fabrication, and delivery.
4. Submittal Review Time: Include review and resubmittal times indicated in Section 013300 "Submittal Procedures" in schedule. Coordinate submittal review times in Contractor's Construction Schedule with submittal schedule.
5. Startup and Testing Time: Include no fewer than 15 days for startup and testing.
6. Commissioning Time: Include no fewer than 15 days for commissioning.
7. Substantial Completion: Indicate completion in advance of date established for Substantial Completion, and allow time for Architect's administrative procedures necessary for certification of Substantial Completion.
8. Punch List and Final Completion: Include not more than 30 days for completion of punch list items and Final Completion.

D. Constraints: Include constraints and work restrictions indicated in the Contract Documents and as follows in schedule, and show how the sequence of the Work is affected.

1. Owner-Furnished Products: Include a separate activity for each product. Include delivery date indicated in Section 011000 "Summary." Delivery dates indicated stipulate the earliest possible delivery date.
2. Work Restrictions: Show the effect of the following items on the schedule:
   a. Coordination with existing construction.
   b. Limitations of continued occupancies.
   c. Uninterruptible services.
   d. Partial occupancy before Substantial Completion.
   e. Use-of-premises restrictions.
   f. Provisions for future construction.
   g. Seasonal variations.
   h. Environmental control.
3. Work Stages: Indicate important stages of construction for each major portion of the Work, including, but not limited to, the following:
   a. Subcontract awards.
   b. Submittals.
   c. Purchases.
   d. Mockups.
   e. Fabrication.
   f. Sample testing.
   g. Deliveries.
   h. Installation.
   i. Tests and inspections.
   j. Adjusting.
   k. Curing.
   l. Building flush-out.
   m. Startup and placement into final use and operation.
   n. Commissioning.
4. Construction Areas: Identify each major area of construction for each major portion of the Work. Indicate where each construction activity within a major area must be sequenced or integrated with other construction activities to provide for the following:
   a. Structural completion.
   b. Temporary enclosure and space conditioning.
   c. Permanent space enclosure.
   d. Completion of mechanical installation.
   e. Completion of electrical installation.
   f. Substantial Completion.

E. Upcoming Work Summary: Prepare summary report indicating activities scheduled to occur or commence prior to submittal of next schedule update. Summarize the following issues:

1. Unresolved issues.
2. Unanswered Requests for Information.
3. Rejected or unreturned submittals.
4. Notations on returned submittals.
5. Pending modifications affecting the Work and the Contract Time.

F. Contractor's Construction Schedule Updating: At monthly intervals, update schedule to reflect actual construction progress and activities. Issue schedule one week before each regularly scheduled progress meeting.

1. Revise schedule immediately after each meeting or other activity where revisions have been recognized or made. Issue updated schedule concurrently with the report of each such meeting.
2. Include a report with updated schedule that indicates every change, including, but not limited to, changes in logic, durations, actual starts and finishes, and activity durations.

3. Updated schedules shall also accompany each Application for Payment. Payment requests submitted without an updated schedule will be considered incomplete.

4. As the Work progresses, indicate Final Completion percentage for each activity.

G. Recovery Schedule: When periodic update indicates the Work is 14 or more calendar days behind the current approved schedule, submit a separate recovery schedule indicating means by which Contractor intends to regain compliance with the schedule. Indicate changes to working hours, working days, crew sizes, equipment required to achieve compliance, and date by which recovery will be accomplished.

1. The Recovery Schedule shall be submitted to the Architect and Owner for review within seven (7) calendar days of notification that the Work is behind schedule. Contractor shall not implement changes affecting overtime, sequencing, or subcontractor commitments without written acceptance.

H. Distribution: Distribute copies of approved schedule to Architect Owner, separate contractors, testing and inspecting agencies, and other parties identified by Contractor with a need-to-know schedule responsibility.

1. Post copies in Project meeting rooms and temporary field offices.
2. When revisions are made, distribute updated schedules to the same parties and post in the same locations. Delete parties from distribution when they have completed their assigned portion of the Work and are no longer involved in performance of construction activities.

1.7 GANTT-CHART SCHEDULE REQUIREMENTS

A. Gantt-Chart Schedule: Submit a comprehensive, fully developed, horizontal, Gantt-chart-type, Contractor's Construction Schedule within days of date established for the Notice to Proceed .

1. Base schedule on the startup construction schedule and additional information received since the start of Project.

B. Preparation: Indicate each significant construction activity separately. Identify first workday of each week with a continuous vertical line.

1. For construction activities that require three months or longer to complete, indicate an estimated completion percentage in 5 percent increments within time bar.

1.8 REPORTS

A. Daily Construction Reports: Prepare a daily construction report recording the following information concerning events at Project site:

1. List of subcontractors at Project site.
2. List of separate contractors at Project site.
3. Approximate count of personnel at Project site.
4. Equipment at Project site.
5. Material deliveries.
6. High and low temperatures and general weather conditions, including presence of rain or snow.
7. Testing and inspection.
8. Accidents.
9. Meetings and significant decisions.
10. Unusual events.
11. Stoppages, delays, shortages, and losses.
12. Meter readings and similar recordings.
13. Emergency procedures.
14. Orders and requests of authorities having jurisdiction.
15. Change Orders received and implemented.
16. Construction Change Directives received and implemented.
17. Services connected and disconnected.
18. Equipment or system tests and startups.
19. Partial completions and occupancies.
20. Substantial Completions authorized.
21. Reports shall be completed on the same day of record and submitted weekly in compiled PDF format to the Architect and Owner's representative.

PART 2 - PRODUCTS (Not Used)

PART 3 - EXECUTION (Not Used)

END OF SECTION 013200

SECTION 013233 - PHOTOGRAPHIC DOCUMENTATION

PART 1 - GENERAL

1.1 SUMMARY

A. Section includes administrative and procedural requirements for the following:

1. Preconstruction photographs.
2. Concealed Work photographs.
3. Periodic construction photographs.
4. Final Completion construction photographs.

B. Related Requirements:

1. Section 017700 "Closeout Procedures" for submitting photographic documentation as Project Record Documents at Project closeout.
2. Section 017900 "Demonstration and Training" for submitting video recordings of demonstration of equipment and training of Owner's personnel.
3. Section 024119 "Selective Demolition" for photographic documentation before selective demolition operations commence.
4. Section 311000 "Site Clearing" for photographic documentation before site clearing operations commence.

1.2 INFORMATIONAL SUBMITTALS

A. Digital Photographs: Submit image files within 5 days of taking photographs.

1. Submit photos digitally.
   a. Submit all photographic documentation via the designated project management platform (e.g., Procore or other specified system). Acceptable formats include JPG or PDF. Include metadata in file properties when possible.
2. Identification: Provide the following information for each image:
   a. Date photograph was taken.
   b. Description of location, vantage point, and direction.

1.3 FORMATS AND MEDIA

A. Digital Photographs: Provide color images in JPG format, produced by a digital camera with minimum sensor size of 12 - megapixels, and at an image resolution of not less than 3200 by 2400 - pixels. Use flash in low light levels or backlit conditions.

B. Digital Images: Submit digital media as originally recorded in the digital camera, without alteration, manipulation, editing, or modifications using image-editing software.

C. File Names: Name media files with date Project area - and sequential numbering suffix.

1.4 CONSTRUCTION PHOTOGRAPHS

A. General: Take photographs with maximum depth of field and in focus.

1. Maintain key plan with each set of construction photographs that identifies each photographic location.

B. Preconstruction Photographs: Before commencement of the Work, take photographs of Project site and surrounding properties, including existing items to remain during construction, from different vantage points, as directed by Architect Construction Manager.

1. Flag construction limits before taking construction photographs.
2. Take 20 - photographs to show existing conditions adjacent to property before starting the Work.
3. Take 20 - photographs of existing buildings either on or adjoining property, to accurately record physical conditions at start of construction.
4. Take additional photographs as required to record settlement or cracking of adjacent structures, pavements, and improvements.

C. Concealed Work Photographs: Before proceeding with installing work that will conceal other work, take photographs sufficient in number, with annotated descriptions, to record nature and location of concealed Work, including, but not limited to, the following:

1. Underground utilities.
2. Underslab services.
3. Piping.
4. Electrical conduit.
5. Waterproofing and weather-resistant barriers.

D. Periodic Construction Photographs: Take 20 - photographs weekly. Select vantage points to show status of construction and progress since last photographs were taken.

1. Photographs shall be taken by the Contractor or designated site photographer. The Construction Manager will verify compliance with weekly submission requirements. Missed submissions may result in non-compliance notices.

E. Final Completion Construction Photographs: Take 20 - photographs after date of Substantial Completion for submission as Project Record Documents. Architect Construction Manager will inform photographer of desired vantage points.

PART 2 - PRODUCTS (Not Used)

PART 3 - EXECUTION (Not Used)

END OF SECTION 013233

SECTION 013300 - SUBMITTAL PROCEDURES

PART 1 - GENERAL

1.1 RELATED DOCUMENTS

A. Drawings and general provisions of the Contract, including General and Supplementary Conditions and other Division 01 Specification Sections, apply to this Section.

1.2 SUMMARY

A. Section Includes:

1. Submittal schedule requirements.
2. Administrative and procedural requirements for submittals.

B. Related Requirements:

1. Section 012900 "Payment Procedures" for submitting Applications for Payment and the schedule of values.
2. Section 013100 "Project Management and Coordination" for submitting coordination drawings and subcontract list and for requirements for web-based Project software.
3. Section 013200 "Construction Progress Documentation" for submitting schedules and reports, including Contractor's construction schedule.
4. Section 017700 "Closeout Procedures" for submitting closeout submittals and maintenance material submittals.
5. Section 017823 "Operation and Maintenance Data" for submitting operation and maintenance manuals.
6. Section 017839 "Project Record Documents" for submitting record Drawings, record Specifications, and record Product Data.

1.3 DEFINITIONS

A. Action Submittals: Written and graphic information and physical samples that require Architect’s and Construction Manager's responsive action. Action submittals are those submittals indicated in individual Specification Sections as "action submittals."

B. Informational Submittals: Written and graphic information and physical samples that do not require Architect’s and Construction Manager's responsive action. Submittals may be rejected for not complying with requirements. Informational submittals are those submittals indicated in individual Specification Sections as "informational submittals."

1.4 SUBMITTAL SCHEDULE

A. Submittal Schedule: Submit, as an action submittal, a list of submittals, arranged in chronological order by dates required by construction schedule. Include time required for review, ordering, manufacturing, fabrication, and delivery when establishing dates. Include additional time required for making corrections or revisions to submittals noted by Architect and

Construction Manager and additional time for handling and reviewing submittals required by those corrections.

1. Coordinate submittal schedule with list of subcontracts, the schedule of values, and Contractor's construction schedule.
    a. Initial Submittal Schedule Deadline: Submit within 14 calendar days of Notice to Proceed.
    b. Rolling Look-Ahead: Maintain a minimum 60-day look-ahead of required submittals aligned with the current construction schedule.
    c. Pay App Linkage: Submit an updated Submittal Schedule/Log with each Application for Payment; Applications lacking the current log will be considered incomplete.
2. Initial Submittal Schedule: Submit concurrently with startup construction schedule. Include submittals required during the first 60 days of construction. List those submittals required to maintain orderly progress of the Work and those required early because of long lead time for manufacture or fabrication.
3. Final Submittal Schedule: Submit concurrently with the first complete submittal of Contractor's construction schedule.
    a. Submit revised submittal schedule as required to reflect changes in current status and timing for submittals.
4. Format: Arrange the following information in a tabular format:
    a. Scheduled date for first submittal.
    b. Specification Section number and title.
    c. Submittal Category: Action; informational.
    d. Name of subcontractor.
    e. Description of the Work covered.
    f. Scheduled date for Architect’s and Construction Manager's final release or approval.

1.5 SUBMITTAL FORMATS

A. Submittal Information: Include the following information in each submittal:

1. Project name.
2. Date.
3. Name of Architect.
4. Name of Contractor.
5. Names of subcontractors, manufacturer, and supplier.
6. Unique submittal number, including revision identifier. Include Specification Section number with sequential alphanumeric identifier and alphanumeric suffix for resubmittals.
7. Category and type of submittal.
8. Submittal purpose and description.
9. Number and title of Specification Section, with paragraph number and generic name for each of multiple items.
10. Drawing number and detail references, as appropriate.
11. Indication of full or partial submittal.
12. Other necessary identification.
13. Signature of transmitter.

B. Options: Identify options requiring selection by Architect.

C. Deviations and Additional Information: On each submittal, clearly indicate deviations from requirements in the Contract Documents, including minor variations and limitations; include relevant additional information and revisions, other than those requested by Architect and

Construction Manager on previous submittals. Indicate by highlighting on each submittal or noting on attached separate sheet.

D. Electronic Submittals: Prepare submittals as PDF package, incorporating complete information into each PDF file. Name PDF file with submittal number.

1.6 SUBMITTAL PROCEDURES

A. Prepare and submit submittals required by individual Specification Sections. Types of submittals are indicated in individual Specification Sections.

a. Platform: Transmit all submittals via the Owner-approved web-based project management system (e.g., Procore or equivalent.)
b. Email: Permitted if acceptable by Owner and Owner's Construction Manager, and must include Architect's standard Submittal cover sheet.

B. Coordination: Coordinate preparation and processing of submittals with performance of construction activities.

1. Coordinate each submittal with fabrication, purchasing, testing, delivery, other submittals, and related activities that require sequential activity.
2. Submit all submittal items required for each Specification Section concurrently unless partial submittals for portions of the Work are indicated on approved submittal schedule.
3. Submit action submittals and informational submittals required by the same Specification Section as separate packages under separate transmittals.
4. Coordinate transmittal of submittals for related parts of the Work specified in different Sections, so processing will not be delayed because of need to review submittals concurrently for coordination.
   a. Architect reserves Architect and Construction Manager reserve the right to withhold action on a submittal requiring coordination with other submittals until related submittals are received.

C. Processing Time: Allow time for submittal review, including time for resubmittals, as follows.

1. Review periods commence on the next business day after receipt by the Architect through the Construction Manager of a complete, coordinated submittal (weekends/holidays excluded).

2. When a submittal requires concurrent review with related submittals (e.g., finish systems or coordinated shop drawings), the review period for all linked items shall not begin until all required components are received.

3. Lack of response does not constitute approval. Resubmittals shall clearly cloud/revise changes. If Contractor's late submittals require expedited review, any associated costs are the Contractor's responsibility.

4. No extension of the Contract Time or adjustment of the Contract Sum will be authorized due to Contractor's failure to transmit submittals early enough to allow for review, coordination, and resubmittal prior to the related Work.

5. Initial Review: Allow 15 days for initial review of each submittal. Allow additional time if coordination with subsequent submittals is required. Architect Construction Manager will advise Contractor when a submittal being processed must be delayed for coordination.

6. Intermediate Review: If intermediate submittal is necessary, process it in same manner as initial submittal.
7. Resubmittal Review: Allow 15 days for review of each resubmittal.

D. Resubmittals: Make resubmittals in same form and number of copies as initial submittal.

1. Note date and content of previous submittal.
2. Note date and content of revision in label or title block, and clearly indicate extent of revision.
3. Resubmit submittals until they are marked with approval notation from Architect's and Construction Manager's action stamp.

E. Distribution: Furnish copies of final submittals to manufacturers, subcontractors, suppliers, fabricators, installers, authorities having jurisdiction, and others as necessary for performance of construction activities. Show distribution on transmittal forms.

F. Use for Construction: Retain complete copies of submittals on Project site. Use only final action submittals that are marked with approval notation from Architect's and Construction Manager's action stamp.

1.7 SUBMITTAL REQUIREMENTS

A. Product Data: Collect information into a single submittal for each element of construction and type of product or equipment.

1. If information must be specially prepared for submittal because standard published data are unsuitable for use, submit as Shop Drawings, not as Product Data.
2. Mark each copy of each submittal to show which products and options are applicable.
3. Include the following information, as applicable:
   a. Manufacturer's catalog cuts.
   b. Manufacturer's product specifications.
   c. Standard color charts.
   d. Statement of compliance with specified referenced standards.
   e. Testing by recognized testing agency.
   f. Notation of coordination requirements.
4. For equipment, include the following in addition to the above, as applicable:
   a. Wiring diagrams that show factory-installed wiring.
   b. Clearances required to other construction, if not indicated on accompanying Shop Drawings.
5. Submit Product Data before Shop Drawings, and before or concurrently with Samples.

B. Shop Drawings: Prepare Project-specific information, drawn accurately to scale. Do not base Shop Drawings on reproductions of the Contract Documents or standard printed data.

1. Preparation: Fully illustrate requirements in the Contract Documents. Include the following information, as applicable:
   a. Identification of products.
   b. Schedules.
   c. Compliance with specified standards.
   d. Notation of coordination requirements.
   e. Notation of dimensions established by field measurement.
   f. Relationship and attachment to adjoining construction clearly indicated.
   g. Seal and signature of professional engineer if specified.

C. Samples: Submit Samples for review of type, color, pattern, and texture for a check of these characteristics with other materials.

1. Transmit Samples that contain multiple, related components, such as accessories together in one submittal package.
2. Identification: Permanently attach label on unexposed side of Samples that includes the following:
   a. Project name and submittal number.
   b. Generic description of Sample.
   c. Product name and name of manufacturer.
   d. Sample source.
   e. Number and title of applicable Specification Section.
   f. Specification paragraph number and generic name of each item.
3. Email Transmittal: Provide PDF transmittal. Include digital image file illustrating Sample characteristics and identification information for record.
4. Disposition: Maintain sets of approved Samples at Project site, available for quality-control comparisons throughout the course of construction activity. Sample sets may be used to determine final acceptance of construction associated with each set.
   a. Samples that may be incorporated into the Work are indicated in individual Specification Sections. Such Samples must be in an undamaged condition at time of use.
   b. Samples not incorporated into the Work, or otherwise designated as Owner's property, are the property of Contractor.
5. Samples for Initial Selection: Submit manufacturer's color charts consisting of units or sections of units, showing the full range of colors, textures, and patterns available.
   a. Number of Samples: Submit 2 full set(s) of available choices where color, pattern, texture, or similar characteristics are required to be selected from manufacturer's product line. Architect, through Construction Manager, will return submittal with options selected.

D. Qualification Data: Prepare written information that demonstrates capabilities and experience of firm or person. Include lists of completed projects with project names and addresses, contact information of architects and owners, and other information specified.

E. Design Data: Prepare and submit written and graphic information indicating compliance with indicated performance and design criteria in individual Specification Sections. Include list of assumptions and summary of loads. Include load diagrams if applicable. Provide name and version of software, if any, used for calculations. Number each page of submittal.

F. Certificates:

1. Certificates and Certifications Submittals: Submit a statement that includes signature of entity responsible for preparing certification. Certificates and certifications shall be signed by an officer or other individual authorized to sign documents on behalf of that entity. Provide a notarized signature where indicated.
2. Installer Certificates: Submit written statements on manufacturer's letterhead, certifying that Installer complies with requirements in the Contract Documents and, where required, is authorized by manufacturer for this specific Project.
3. Manufacturer Certificates: Submit written statements on manufacturer's letterhead, certifying that manufacturer complies with requirements in the Contract Documents. Include evidence of manufacturing experience where required.
4. Material Certificates: Submit written statements on manufacturer's letterhead, certifying that material complies with requirements in the Contract Documents. Provide statement that manufacturer will comply with BABAA requirements, including coordination with manufacturers, distributors, and suppliers to correct deficiencies in any BABAA documentation.

5. Welding Certificates: Prepare written certification that welding procedures and personnel comply with requirements in the Contract Documents. Submit record of AWS B2.1/B2.1M on AWS forms. Include names of firms and personnel certified.

G. Test and Research Reports:

1. Compatibility Test Reports: Submit reports written by a qualified testing agency, on testing agency's standard form, indicating and interpreting results of compatibility tests performed before installation of product. Include written recommendations for substrate preparation and primers required.
2. Material Test Reports: Submit reports written by a qualified testing agency, on testing agency's standard form, indicating and interpreting test results of material for compliance with requirements in the Contract Documents.
3. Product Test Reports: Submit written reports indicating that current product produced by manufacturer complies with requirements in the Contract Documents. Base reports on evaluation of tests performed by manufacturer and witnessed by a qualified testing agency, or on comprehensive tests performed by a qualified testing agency.

1.8 DELEGATED-DESIGN SERVICES

A. Performance and Design Criteria: Where professional design services or certifications by a design professional are specifically required of Contractor by the Contract Documents, provide products and systems complying with specific performance and design criteria indicated.

1. If criteria indicated are insufficient to perform services or certification required, submit a written request for additional information to Architect.

B. Delegated-Design Services Certification: In addition to Shop Drawings, Product Data, and other required submittals, submit digitally signed PDF file paper copies of certificate, signed and sealed by the responsible design professional, for each product and system specifically assigned to Contractor to be designed or certified by a design professional.

1. Indicate that products and systems comply with performance and design criteria in the Contract Documents. Include list of codes, loads, and other factors used in performing these services.

1.9 CONTRACTOR'S REVIEW

A. Action Submittals and Informational Submittals: Review each submittal and check for coordination with other Work of the Contract and for compliance with the Contract Documents. Note corrections and field dimensions. Mark with approval stamp before submitting to Architect.

B. Contractor's Approval: Indicate Contractor's approval for each submittal with a uniform approval stamp. Include name of reviewer, date of Contractor's approval, and statement certifying that submittal has been reviewed, checked, and approved for compliance with the Contract Documents.

1. Architect will not review submittals received from Contractor that do not have Contractor's review and approval.

1.10 ARCHITECT AND CONSTRUCTION MANAGER'S REVIEW

A. Action Submittals: Architect and Construction Manager will review each submittal, indicate corrections or revisions required, and return.

1. PDF Submittals: Architect and Construction Manager will indicate, via markup on each submittal, the appropriate action: No Exceptions Taken, Make Corrections Noted, Amend & Resubmit, Rejected, Reviewed.

B. Informational Submittals: Architect and Construction Manager will review each submittal and will not return it or will return it if it does not comply with requirements. Architect and Construction Manager will forward each submittal to appropriate party.

C. Partial submittals prepared for a portion of the Work will be reviewed when use of partial submittals has received prior approval from Architect and Construction Manager.

D. Incomplete submittals are unacceptable, will be considered nonresponsive, and will be returned for resubmittal without review.

E. Architect and Construction Manager will return without review submittals received from sources other than Contractor.

F. Submittals not required by the Contract Documents will be returned by Architect without action.

PART 2 - PRODUCTS (Not Used)

PART 3 - EXECUTION (Not Used)

END OF SECTION 013300

SECTION 014000 - QUALITY REQUIREMENTS

PART 1 - GENERAL

1.1 SUMMARY

A. Section includes administrative and procedural requirements for quality assurance and quality control.

B. Testing and inspection services are required to verify compliance with requirements specified or indicated. These services do not relieve Contractor of responsibility for compliance with the Contract Document requirements.

1. Specific quality-assurance and quality-control requirements for individual work results are specified in their respective Specification Sections. Requirements in individual Sections may also cover production of standard products.
2. Specified tests, inspections, and related actions do not limit Contractor's other quality-assurance and quality-control procedures that facilitate compliance with the Contract Document requirements.
3. Requirements for Contractor to provide quality-assurance and quality-control services required by Architect, Owner, Construction Manager, or authorities having jurisdiction are not limited by provisions of this Section.

1.2 DEFINITIONS

A. Experienced: When used with an entity or individual, "experienced," unless otherwise further described, means having successfully completed a minimum of five - previous projects similar in nature, size, and extent to this Project; being familiar with special requirements indicated; and having complied with requirements of authorities having jurisdiction.

B. Field Quality-Control Tests and Inspections: Tests and inspections that are performed on-site for installation of the Work and for completed Work.

C. Installer/Applicator/Erector: Contractor or another entity engaged by Contractor as an employee, subcontractor, or sub-subcontractor, to perform a particular construction operation, including installation, erection, application, assembly, and similar operations.

1. Use of trade-specific terminology in referring to a Work result does not require that certain construction activities specified apply exclusively to specific trade(s).

D. Source Quality-Control Tests and Inspections: Tests and inspections that are performed at the source (e.g., plant, mill, factory, or shop).

E. Testing Agency: An entity engaged to perform specific tests, inspections, or both. The term "testing laboratory" has the same meaning as the term "testing agency."

F. Quality-Assurance Services: Activities, actions, and procedures performed before and during execution of the Work, to guard against defects and deficiencies and substantiate that proposed construction will comply with requirements.

1.3 CONFLICTING REQUIREMENTS

A. Conflicting Standards and Other Requirements: If compliance with two or more standards or requirements is specified and the standards or requirements establish different or conflicting requirements for minimum quantities or quality levels, inform the Architect regarding the conflict and obtain clarification prior to proceeding with the Work. Refer conflicting requirements that are different, but apparently equal, to Architect for clarification before proceeding.

B. Minimum Quantity or Quality Levels: The quantity or quality level shown or specified is the minimum provided or performed. The actual installation may comply exactly with the minimum quantity or quality specified, or it may exceed the minimum within reasonable limits. To comply with these requirements, indicated numeric values are minimum or maximum, as appropriate, for the context of requirements. Refer uncertainties to Architect for a decision before proceeding.

1.4 ACTION SUBMITTALS

A. Mockup Shop Drawings:

1. Include plans, sections, elevations, and details, indicating materials and size of mockup construction.
2. Provide axonometric drawings for conditions difficult to illustrate in two dimensions.

1.5 INFORMATIONAL SUBMITTALS

A. Contractor's Quality-Control Plan: For quality-assurance and quality-control activities and responsibilities.

B. Qualification Data: For Contractor's quality-control personnel.

C. Schedule of Tests and Inspections: Prepare in tabular form and include the following:

1. Specification Section number and title.
2. Entity responsible for performing tests and inspections.
3. Description of test and inspection.
4. Identification of applicable standards.
5. Identification of test and inspection methods.
6. Number of tests and inspections required.
7. Time schedule or time span for tests and inspections.
8. Requirements for obtaining samples.
9. Unique characteristics of each quality-control service.

D. Permits, Licenses, and Certificates: For Owner's record, submit copies of permits, licenses, certifications, inspection reports, releases, jurisdictional settlements, notices, receipts for fee payments, judgments, correspondence, records, and similar documents established for compliance with standards and regulations bearing on performance of the Work.

1.6 CONTRACTOR'S QUALITY-CONTROL PLAN

A. Quality-Control Plan, General: Submit quality-control plan within 10 - days of Notice to Proceed, and not less than five - days prior to preconstruction conference. Submit in format acceptable to Architect. Identify personnel, procedures, controls, instructions, tests, records, and forms to be used to carry out Contractor's quality-assurance and quality-control responsibilities and to

coordinate Owner's quality-assurance and quality-control activities. Coordinate with Contractor's Construction Schedule.

B. Quality-Control Personnel Qualifications: Engage qualified personnel trained and experienced in managing and executing quality-assurance and quality-control procedures similar in nature and extent to those required for Project.

1. Project quality-control manager may also serve as Project superintendent.

C. Submittal Procedure: Describe procedures for ensuring compliance with requirements through review and management of submittal process. Indicate qualifications of personnel responsible for submittal review.

D. Testing and Inspection: In quality-control plan, include a comprehensive schedule of Work requiring testing or inspection, including the following:

1. Contractor-performed tests and inspections, including subcontractor-performed tests and inspections. Include required tests and inspections and Contractor-elected tests and inspections. Distinguish source quality-control tests and inspections from field quality-control tests and inspections.
2. Special inspections required by authorities having jurisdiction and indicated on the Statement of Special Inspections.
3. Owner-performed tests and inspections indicated in the Contract Documents.

E. Continuous Inspection of Workmanship: Describe process for continuous inspection during construction to identify and correct deficiencies in workmanship in addition to testing and inspection specified. Indicate types of corrective actions to be required to bring the Work into compliance with standards of workmanship established by Contract requirements and approved mockups.

F. Monitoring and Documentation: Maintain testing and inspection reports, including log of approved and rejected results. Include Work Architect has indicated as nonconforming or defective. Indicate corrective actions taken to bring nonconforming Work into compliance with requirements. Comply with requirements of authorities having jurisdiction.

1.7 REPORTS AND DOCUMENTS

A. Test and Inspection Reports: Prepare and submit certified written reports specified in other Sections. Include the following:

1. Date of issue.
2. Project title and number.
3. Name, address, telephone number, and email address of testing agency.
4. Dates and locations of samples and tests or inspections.
5. Names of individuals making tests and inspections.
6. Description of the Work and test and inspection method.
7. Identification of product and Specification Section.
8. Complete test or inspection data.
9. Test and inspection results and an interpretation of test results.
10. Record of temperature and weather conditions at time of sample-taking and testing and inspection.
11. Comments or professional opinion on whether tested or inspected Work complies with the Contract Document requirements.
12. Name and signature of laboratory inspector.

13. Recommendations on retesting and reinspecting.

B. Manufacturer's Technical Representative's Field Reports: Prepare written information documenting manufacturer's technical representative's tests and inspections specified in other Sections. Include the following:

1. Name, address, telephone number, and email address of technical representative making report.
2. Other required items indicated in individual Specification Sections.

C. Factory-Authorized Service Representative's Reports: Prepare written information documenting manufacturer's factory-authorized service representative's tests and inspections specified in other Sections. Include the following:

1. Name, address, telephone number, and email address of factory-authorized service representative making report.
2. Other required items indicated in individual Specification Sections.

1.8 QUALITY ASSURANCE

A. Qualifications paragraphs in this article establish the minimum qualification levels required; individual Specification Sections specify additional requirements.

B. Manufacturer Qualifications: A firm experienced in manufacturing products or systems similar to those indicated for this Project and with a record of successful in-service performance, as well as sufficient production capacity to produce required units. As applicable, procure products from manufacturers able to meet qualification requirements, warranty requirements, and technical or factory-authorized service representative requirements.

C. Fabricator Qualifications: A firm experienced in producing products similar to those indicated for this Project and with a record of successful in-service performance, as well as sufficient production capacity to produce required units.

D. Installer Qualifications: A firm or individual experienced in installing, erecting, applying, or assembling work similar in material, design, and extent to that indicated for this Project, whose work has resulted in construction with a record of successful in-service performance.

1.9 QUALITY CONTROL

A. Schedule of Tests and Inspections: Prepare a schedule of tests, inspections, and similar quality-control services required by the Contract Documents as a component of Contractor's quality-control plan. Coordinate and submit concurrently with Contractor's Construction Schedule. Update and submit with each Application for Payment.

1. Schedule Contents: Include tests, inspections, and quality-control services, including Contractor- and Owner-retained services, commissioning activities, and other Project-required services paid for by other entities.
2. Distribution: Distribute schedule to Owner, Architect, Construction Manager, testing agencies, and each party involved in performance of portions of the Work where tests and inspections are required.

PART 2 - PRODUCTS (Not Used)

PART 3 - EXECUTION

3.1 TEST AND INSPECTION LOG

A. Test and Inspection Log: Prepare a record of tests and inspections. Include the following:

1. Date test or inspection was conducted.
2. Description of the Work tested or inspected.
3. Date test or inspection results were transmitted to Architect.
4. Identification of testing agency or special inspector conducting test or inspection.

B. Maintain log at Project site. Post changes and revisions as they occur. Provide access to test and inspection log for Architect's and authorities' having jurisdiction reference during normal working hours.

1. Submit log at Project closeout as part of Project Record Documents.

3.2 REPAIR AND PROTECTION

A. General: On completion of testing, inspection, sample-taking, and similar services, repair damaged construction and restore substrates and finishes.

1. Provide materials and comply with installation requirements specified in other Specification Sections or matching existing substrates and finishes. Restore patched areas and extend restoration into adjoining areas with durable seams that are as invisible as possible. Comply with the Contract Document requirements for cutting and patching in Section 017300 "Execution."

B. Protect construction exposed by or for quality-control service activities.

C. Repair and protection are Contractor's responsibility, regardless of the assignment of responsibility for quality-control services.

END OF SECTION 014000

SECTION 015000 - TEMPORARY FACILITIES AND CONTROLS

PART 1 - GENERAL

1.1 RELATED DOCUMENTS

A. Drawings and general provisions of the Contract, including General and Supplementary Conditions and other Division 01 Specification Sections, apply to this Section.

1.2 SUMMARY

A. Section includes requirements for temporary utilities, support facilities, and security and protection facilities.

B. Related Requirements:

1. Section 011000 "Summary" for work restrictions and limitations on utility interruptions.
2. Section 012100 "Allowances" for allowance for metered use of temporary utilities.

1.3 INFORMATIONAL SUBMITTALS

A. Site Utilization Plan: Show temporary facilities, temporary utility lines and connections, staging areas, construction site entrances, vehicle circulation, and parking areas for construction personnel.

B. Project Identification and Temporary Signs: Show fabrication and installation details, including plans, elevations, details, layouts, typestyles, graphic elements, and message content.

C. Fire-Safety Program: Show compliance with requirements of NFPA 241 and authorities having jurisdiction. Indicate Contractor personnel responsible for management of fire-prevention program.

1.4 PROJECT CONDITIONS

A. Temporary Use of Permanent Facilities: Engage Installer of each permanent service to assume responsibility for operation, maintenance, and protection of each permanent service during its use as a construction facility before Owner's acceptance, regardless of previously assigned responsibilities.

PART 2 - PRODUCTS

2.1 MATERIALS

A. Portable Chain-Link Fencing: Minimum 2-inch, 0.148-inch- thick, galvanized-steel, chain-link fabric fencing; minimum 6 feet high with galvanized-steel pipe posts; minimum 2-3/8-inch- OD line posts and 2-7/8-inch- OD corner and pull posts, with 1-5/8-inch- OD top and bottom rails. Provide galvanized-steel bases for supporting posts.

B. Dust-Control Adhesive-Surface Walk-Off Mats: Provide mats, minimum 36 by 60 inches.

C. Insulation: Unfaced mineral-fiber blanket, manufactured from glass, slag wool, or rock wool; with maximum flame-spread and smoke-developed indexes of 25 and 50, respectively.

2.2 EQUIPMENT

A. Fire Extinguishers: Portable, UL rated; with class and extinguishing agent as required by locations and classes of fire exposures.

PART 3 - EXECUTION

3.1 TEMPORARY FACILITIES, GENERAL

A. Conservation: Coordinate construction and use of temporary facilities with consideration given to conservation of energy, water, and materials. Coordinate use of temporary utilities to minimize waste.

3.2 INSTALLATION, GENERAL

A. Locate facilities where they will serve Project adequately and result in minimum interference with performance of the Work. Relocate and modify facilities as required by progress of the Work.

1. Locate facilities to limit site disturbance as specified in Section 011000 "Summary."

B. Provide each facility ready for use when needed to avoid delay. Do not remove until facilities are no longer needed or are replaced by authorized use of completed permanent facilities.

3.3 TEMPORARY UTILITY INSTALLATION

A. General: Install temporary service or connect to existing service.

1. Arrange with utility company, Owner, and existing users for time when service can be interrupted, if necessary, to make connections for temporary services.
2. Contractor shall provide all temporary meters, backflow preventers, protection devices, and removal/restoration of connections. Coordinate locations and capacities with the Owner prior to installation

B. Water Service: Connect to Owner's existing water service facilities. Clean and maintain water service facilities in a condition acceptable to Owner. At Substantial Completion, restore these facilities to condition existing before initial use.

C. Sanitary Facilities: Provide temporary toilets, wash facilities, safety shower and eyewash facilities, and drinking water for use of construction personnel. Comply with requirements of authorities having jurisdiction for type, number, location, operation, and maintenance of fixtures and facilities.

D. Electric Power Service: Connect to Owner’s existing electrical service facilities.

E. Lighting: Provide temporary lighting with local switching that provides adequate illumination for construction operations, observations, inspections, and traffic conditions.

1. Install and operate temporary lighting that fulfills security and protection requirements without operating entire system.

3.4 SECURITY AND PROTECTION FACILITIES INSTALLATION

A. Temporary Egress: Provide temporary egress from existing occupied facilities as indicated and as required by authorities having jurisdiction. Provide signage directing occupants to temporary egress.

3.5 MOISTURE AND MOLD CONTROL

A. Moisture and Mold Protection: Protect stored materials and installed Work in accordance with Moisture and Mold Protection Plan.

B. Partially Enclosed Construction Period: After installation of weather barriers but before full enclosure and conditioning of building, when installed materials are still subject to infiltration of moisture and ambient mold spores, protect as follows:

1. Do not load or install drywall or other porous materials or components, or items with high organic content, into partially enclosed building.
2. Keep interior spaces reasonably clean and protected from water damage.
3. Periodically collect and remove waste containing cellulose or other organic matter.
4. Discard or replace water-damaged material.
5. Do not install material that is wet.
6. Discard and replace stored or installed material that begins to grow mold.
7. Perform work in a sequence that allows wet materials adequate time to dry before enclosing the material in gypsum board or other interior finishes.

C. Controlled Construction Period: After completing and sealing of the building enclosure but prior to the full operation of permanent HVAC systems, maintain as follows:

1. Control moisture and humidity inside building by maintaining effective dry-in conditions.
2. Use temporary or permanent HVAC system to control humidity within ranges specified for installed and stored materials.
3. Coordinate with the mechanical engineer of record prior to operating permanent HVAC equipment for temporary conditioning, and provide filtration and maintenance to preserve warranty coverage.
4. Comply with manufacturer's written instructions for temperature, relative humidity, and exposure to water limits.
   a. Hygroscopic materials that may support mold growth, including wood and gypsum-based products, that become wet during the course of construction and remain wet for 48 hours are considered defective and require replacing.
   b. Measure moisture content of materials that have been exposed to moisture during construction operations or after installation. Record readings beginning at time of exposure and continuing daily for 48 hours. Identify materials containing moisture levels higher than allowed. Report findings in writing to Architect.
   c. Remove and replace materials that cannot be completely restored to their manufactured moisture level within 48 hours.

3.6 OPERATION, TERMINATION, AND REMOVAL

A. Supervision: Enforce strict discipline in use of temporary facilities. To minimize waste and abuse, limit availability of temporary facilities to essential and intended uses.

B. Maintenance: Maintain facilities in good operating condition until removal.

1. Maintain operation of temporary enclosures, heating, cooling, humidity control, ventilation, and similar facilities on a 24-hour basis where required to achieve indicated results and to avoid possibility of damage.

C. Temporary Facility Changeover: Do not change over from using temporary security and protection facilities to permanent facilities until Substantial Completion.

D. Termination and Removal: Remove each temporary facility when need for its service has ended, when it has been replaced by authorized use of a permanent facility, or no later than Substantial Completion. Complete or, if necessary, restore permanent construction that may have been delayed because of interference with temporary facility. Repair damaged Work, clean exposed surfaces, and replace construction that cannot be satisfactorily repaired.

1. Materials and facilities that constitute temporary facilities are property of Contractor. Owner reserves right to take possession of Project identification signs.

END OF SECTION 015000

SECTION 016000 - PRODUCT REQUIREMENTS

PART 1 - GENERAL

1.1 RELATED DOCUMENTS

A. Drawings and general provisions of the Contract, including General and Supplementary Conditions and other Division 01 Specification Sections, apply to this Section.

1.2 SUMMARY

A. Section includes administrative and procedural requirements for selection of products for use in Project; product delivery, storage, and handling; manufacturers' standard warranties on products; special warranties; and comparable products.

B. Related Requirements:

1. Section 011000 "Summary" for Contractor requirements related to Owner-furnished products.
2. Section 012100 "Allowances" for products selected under an allowance.
3. Section 012500 "Substitution Procedures" for requests for substitutions.
4. Section 017700 "Closeout Procedures" for submitting warranties.

1.3 DEFINITIONS

A. Products: Items obtained for incorporating into the Work, whether purchased for Project or taken from previously purchased stock. The term "product" includes the terms "material," "equipment," "system," and terms of similar intent.

1. Named Products: Items identified by manufacturer's product name, including make or model number or other designation shown or listed in manufacturer's published product literature that is current as of date of the Contract Documents.
2. New Products: Items that have not previously been incorporated into another project or facility. Salvaged items or items reused from other projects are not considered new products. Items that are manufactured or fabricated to include recycled content materials are considered new products, unless indicated otherwise.
3. Comparable Product: Product by named manufacturer that is demonstrated and approved through the comparable product submittal process described in Part 2 "Comparable Products" Article, to have the indicated qualities related to type, function, dimension, in-service performance, physical properties, appearance, and other characteristics that equal or exceed those of specified product.

B. Basis-of-Design Product Specification: A specification in which a single manufacturer's product is named and accompanied by the words "basis-of-design product," including make or model number or other designation. Published attributes and characteristics of basis-of-design product establish salient characteristics of products.

1. Evaluation of Comparable Products: In addition to the basis-of-design product description, product attributes and characteristics may be listed to establish the significant qualities related to type, function, in-service performance and physical

properties, weight, dimension, durability, visual characteristics, and other special features and requirements for purposes of evaluating comparable products of additional manufacturers named in the specification. Manufacturer's published attributes and characteristics of basis-of-design product also establish salient characteristics of products for purposes of evaluating comparable products.

C. Subject to Compliance with Requirements: Where the phrase "Subject to compliance with requirements" introduces a product selection procedure in an individual Specification Section, provide products qualified under the specified product procedure. In the event that a named product or product by a named manufacturer does not meet the other requirements of the specifications, select another named product or product from another named manufacturer that does meet the requirements of the specifications; submit a comparable product request or substitution request, if applicable.

D. Comparable Product Request Submittal: An action submittal requesting consideration of a comparable product, including the following information:

1. Identification of basis-of-design product or fabrication or installation method to be replaced, including Specification Section number and title and Drawing numbers and titles.
2. Data indicating compliance with the requirements specified in Part 2 "Comparable Products" Article.

E. Basis-of-Design Product Specification Submittal: An action submittal complying with requirements in Section 013300 "Submittal Procedures."

F. Substitution: Refer to Section 012500 "Substitution Procedures" for definition and limitations on substitutions.

1.4 QUALITY ASSURANCE

A. Compatibility of Options: If Contractor is given option of selecting between two or more products for use on Project, select product compatible with products previously selected, even if previously selected products were also options.

1.5 COORDINATION

A. Modify or adjust affected work as necessary to integrate work of approved comparable products and approved substitutions.

1.6 PRODUCT DELIVERY, STORAGE, AND HANDLING

A. Deliver, store, and handle products, using means and methods that will prevent damage, deterioration, and loss, including theft and vandalism. Comply with manufacturer's written instructions.

B. Delivery and Handling:

1. Schedule delivery to minimize long-term storage at Project site and to prevent overcrowding of construction spaces.

2. Coordinate delivery with installation time to ensure minimum holding time for items that are flammable, hazardous, easily damaged, or sensitive to deterioration, theft, and other losses.
3. Deliver products to Project site in an undamaged condition in manufacturer's original sealed container or other packaging system, complete with labels and instructions for handling, storing, unpacking, protecting, and installing.
4. Inspect products on delivery to determine compliance with the Contract Documents and that products are undamaged and properly protected.

C. Storage:

1. Provide a secure location and enclosure at Project site for storage of materials and equipment.
2. Store products to allow for inspection and measurement of quantity or counting of units. Verify and record the condition and quantity of stored materials monthly; submit photographic documentation with each Application for Payment covering stored materials.
3. Store materials in a manner that will not endanger Project structure.
4. Store products that are subject to damage by the elements under cover in a weathertight enclosure above ground, with ventilation adequate to prevent condensation and with adequate protection from wind.
5. Protect foam plastic from exposure to sunlight, except to extent necessary for period of installation and concealment.
6. Comply with product manufacturer's written instructions for temperature, humidity, ventilation, and weather-protection requirements for storage.
7. Protect stored products from damage and liquids from freezing.
8. Provide a secure location and enclosure at Project site for storage of materials and equipment by Owner's construction forces. Coordinate location with Owner.

1.7 PRODUCT WARRANTIES

A. Warranties specified in other Sections shall be in addition to, and run concurrent with, other warranties required by the Contract Documents. Manufacturer's disclaimers and limitations on product warranties do not relieve Contractor of obligations under requirements of the Contract Documents.

1. Manufacturer's Warranty: Written standard warranty form furnished by individual manufacturer for a particular product and issued in the name of the Owner or endorsed by manufacturer to Owner.
2. Special Warranty: Written warranty required by the Contract Documents to provide specific rights for Owner and issued in the name of the Owner or endorsed by manufacturer to Owner.

B. Special Warranties: Prepare a written document that contains appropriate terms and identification, ready for execution.

1. Manufacturer's Standard Form: Modified to include Project-specific information and properly executed.
2. Specified Form: When specified forms are included in the Project Manual, prepare a written document, using indicated form properly executed.
3. See other Sections for specific content requirements and particular requirements for submitting special warranties.

C. Submittal Time: Comply with requirements in Section 017700 "Closeout Procedures."

PART 2 - PRODUCTS

2.1 PRODUCT SELECTION PROCEDURES

A. General Product Requirements: Provide products that comply with the Contract Documents, are undamaged and, unless otherwise indicated, are new at time of installation.

1. Provide products complete with accessories, trim, finish, fasteners, and other items needed for a complete installation and indicated use and effect.
2. Standard Products: If available, and unless custom products or nonstandard options are specified, provide standard products of types that have been produced and used successfully in similar situations on other projects.
3. Owner reserves the right to limit selection to products with warranties meeting requirements of the Contract Documents.
4. Where products are accompanied by the term "as selected," Architect will make selection.
5. Descriptive, performance, and reference standard requirements in the Specifications establish salient characteristics of products.
6. Or Equal: For products specified by name and accompanied by the term "or equal," "or approved equal," or "or approved," comply with requirements in "Comparable Products" Article to obtain approval for use of an unnamed product.
   a. Submit additional documentation required by Architect in order to establish equivalency of proposed products. Unless otherwise indicated, evaluation of "or equal" product status is by the Architect, whose determination is final.
   b. The Architect’s determination regarding equivalency shall be final and binding, and any product rejected shall not be resubmitted without a formal substitution request under Section 012500.

B. Product Selection Procedures:

1. Non-Limited List of Products: Where Specifications include a list of names of both available manufacturers and products, provide one of the products listed or an unnamed product that complies with requirements.
   a. Non-limited list of products is indicated by the phrase "Subject to compliance with requirements, available products that may be incorporated in the Work include, but are not limited to, the following."
   b. Provision of an unnamed product is not considered a substitution, if the product complies with requirements.
2. Basis-of-Design Product: Where Specifications name a product, or refer to a product indicated on Drawings, and include a list of manufacturers, provide the specified or indicated product or a comparable product by one of the other named manufacturers. Drawings and Specifications may additionally indicate sizes, profiles, dimensions, and other characteristics that are based on the product named. Comply with requirements in "Comparable Products" Article for consideration of an unnamed product by one of the other named manufacturers.
   a. For approval of products by unnamed manufacturers, comply with requirements in Section 012500 "Substitution Procedures" for substitutions for convenience.

C. Visual Selection Specification: Where Specifications include the phrase "as selected by Architect from manufacturer's full range" or a similar phrase, select a product that complies with requirements. Architect will select color, gloss, pattern, density, or texture from manufacturer's product line that includes both standard and premium items.

2.2 COMPARABLE PRODUCTS

A. Conditions for Consideration of Comparable Products: Architect will consider Contractor's request for comparable product when the following conditions are satisfied. If the following conditions are not satisfied, Architect may return requests without action, except to record noncompliance with the following requirements:

1. Evidence that proposed product does not require revisions to the Contract Documents, is consistent with the Contract Documents, will produce the indicated results, and is compatible with other portions of the Work.
2. Detailed comparison of significant qualities of proposed product with those of the named basis-of-design product. Significant product qualities include attributes, such as type, function, in-service performance and physical properties, weight, dimension, durability, visual characteristics, and other specific features and requirements.
3. Include a side-by-side comparison matrix identifying deviations from the basis-of-design product, supported by independent test data where applicable.
4. Evidence that proposed product provides specified warranty.
5. List of similar installations for completed projects, with project names and addresses and names and addresses of architects and owners, if requested.
6. Samples, if requested.

B. Architect's Action on Comparable Products Submittal: If necessary, Architect will request additional information or documentation for evaluation, as specified in Section 013300 "Submittal Procedures."

1. Form of Approval of Submittal: As specified in Section 013300 "Submittal Procedures."
2. Use product specified if Architect does not issue a decision on use of a comparable product request within time allocated.

C. Submittal Requirements, Single-Step Process: When acceptable to Architect, incorporate specified submittal requirements of individual Specification Section in combined submittal for comparable products. Approval by the Architect of Contractor's request for use of comparable product and of individual submittal requirements will also satisfy other submittal requirements.

PART 3 - EXECUTION (Not Used)

END OF SECTION 016000

SECTION 017300 - EXECUTION

PART 1 - GENERAL

1.1 RELATED DOCUMENTS

A. Drawings and general provisions of the Contract, including General and Supplementary Conditions and other Division 01 Specification Sections, apply to this Section.

1.2 SUMMARY

A. Section includes general administrative and procedural requirements governing execution of the Work, including, but not limited to, the following:

1. Construction layout.
2. Installation of the Work.
3. Cutting and patching.
4. Coordination of Owner-installed products.
5. Progress cleaning.
6. Starting and adjusting.
7. Protection of installed construction.

B. Related Requirements:

1. Section 017700 "Closeout Procedures" for submitting final property survey with Project Record Documents, recording of Owner-accepted deviations from indicated lines and levels, replacing defective work, and final cleaning.
2. Section 024119 "Selective Demolition" for demolition and removal of selected portions of the building.

1.3 DEFINITIONS

A. Cutting: Removal of in-place construction necessary to permit installation or performance of subsequent work.

B. Patching: Fitting and repair work required to restore construction to original conditions after installation of subsequent work.

1.4 QUALITY ASSURANCE

A. Cutting and Patching: Comply with requirements for and limitations on cutting and patching of construction elements.

1. Structural Elements: When cutting and patching structural elements, or when encountering the need for cutting and patching of elements whose structural function is not known, notify Architect of locations and details of cutting and await directions from Architect before proceeding. Shore, brace, and support structural elements during cutting and patching. Do not cut and patch structural elements in a manner that could change their load-carrying capacity or increase deflection.

2. Operational Elements: Do not cut and patch operating elements and related components in a manner that results in reducing their capacity to perform as intended or that results in increased maintenance or decreased operational life or safety.
   a. Primary operational systems and equipment.
   b. Plumbing piping systems.
   c. Fire-detection and -alarm systems.
   d. Electrical wiring systems.
   e. Operating systems of special construction.

3. Other Construction Elements: Do not cut and patch other construction elements or components in a manner that could change their load-carrying capacity, that results in reducing their capacity to perform as intended, or that results in increased maintenance or decreased operational life or safety.
   a. Water, moisture, or vapor barriers.
   b. Membranes and flashings.
   c. Equipment supports.
   d. Piping, ductwork, vessels, and equipment.
   e. Noise- and vibration-control elements and systems.
4. Visual Elements: Do not cut and patch construction in a manner that results in visual evidence of cutting and patching. Do not cut and patch exposed construction in a manner that would, in Architect's opinion, reduce the building's aesthetic qualities. Remove and replace construction that has been cut and patched in a visually unsatisfactory manner.

B. Manufacturer's Installation Instructions: Obtain and maintain on-site manufacturer's written recommendations and instructions for installation of specified products and equipment.

PART 2 - PRODUCTS

2.1 MATERIALS

A. Comply with requirements specified in other Sections.

1. For projects requiring compliance with sustainable design and construction practices and procedures, use products for patching that comply with sustainable design requirements.

B. In-Place Materials: Use materials for patching identical to in-place materials. For exposed surfaces, use materials that visually match in-place adjacent surfaces to the fullest extent possible.

1. If identical materials are unavailable or cannot be used, use materials that, when installed, will provide a match acceptable to Architect for the visual and functional performance of in-place materials. Use materials that are not considered hazardous.

C. Cleaning Agents: Use cleaning materials and agents recommended by manufacturer or fabricator of the surface to be cleaned. Do not use cleaning agents that are potentially hazardous to health or property or that might damage finished surfaces.

PART 3 - EXECUTION

3.1 EXAMINATION

A. Existing Conditions: The existence and location of underground and other utilities and construction indicated as existing are not guaranteed. Before beginning sitework, investigate and verify the existence and location of underground utilities, mechanical and electrical systems, and other construction affecting the Work.

1. Before construction, verify the location and invert elevation at points of connection of sanitary sewer, storm sewer, gas service piping, and water-service piping; underground electrical services; and other utilities.
2. Furnish location data for work related to Project that must be performed by public utilities serving Project site.

B. Examination and Acceptance of Conditions: Before proceeding with each component of the Work, examine substrates, areas, and conditions, with Installer or Applicator present where indicated, for compliance with requirements for installation tolerances and other conditions affecting performance. Record observations.

1. Examine roughing-in for mechanical and electrical systems to verify actual locations of connections before equipment and fixture installation.
2. Examine walls, floors, and roofs for suitable conditions where products and systems are to be installed.
3. Verify compatibility with and suitability of substrates, including compatibility with existing finishes or primers.

C. Written Report: Where a written report listing conditions detrimental to performance of the Work is required by other Sections, include the following:

1. Description of the Work, including Specification Section number and paragraph, and Drawing sheet number and detail, where applicable.
2. List of detrimental conditions, including substrates.
3. List of unacceptable installation tolerances.
4. Recommended corrections.

D. Proceed with installation only after unsatisfactory conditions have been corrected. Proceeding with the Work indicates acceptance of surfaces and conditions.

3.2 PREPARATION

A. Existing Utility Information: Furnish information to [**local utility**] Owner that is necessary to adjust, move, or relocate existing utility structures, utility poles, lines, services, or other utility appurtenances located in or affected by construction. Coordinate with authorities having jurisdiction.

B. Field Measurements: Take field measurements as required to fit the Work properly. Recheck measurements before installing each product. Where portions of the Work are indicated to fit to other construction, verify dimensions of other construction by field measurements before fabrication. Coordinate fabrication schedule with construction progress to avoid delaying the Work.

C. Space Requirements: Verify space requirements and dimensions of items shown diagrammatically on Drawings.

D. Review of Contract Documents and Field Conditions: Immediately on discovery of the need for clarification of the Contract Documents, submit a request for information to Architect through Construction Manager in accordance with requirements in Section 013100 "Project Management and Coordination."

3.3 CONSTRUCTION LAYOUT

A. Verification: Before proceeding to lay out the Work, verify layout information shown on Drawings, in relation to the property survey and existing benchmarks and existing conditions. If discrepancies are discovered, notify Architect and Construction Manager promptly.

B. Site Improvements: Locate and lay out site improvements, including pavements, grading, fill and topsoil placement, utility slopes, and rim and invert elevations.

C. Building Lines and Levels: Locate and lay out control lines and levels for structures, building foundations, column grids, and floor levels, including those required for mechanical and electrical work. Transfer survey markings and elevations for use with control lines and levels. Level foundations and piers from two or more locations.

D. Record Log: Maintain a log of layout control work. Record deviations from required lines and levels. Include beginning and ending dates and times of surveys, weather conditions, name and duty of each survey party member, and types of instruments and tapes used. Make the log available for reference by Architect and Construction Manager.

3.4 INSTALLATION

A. Locate the Work and components of the Work accurately, in correct alignment and elevation, as indicated.

1. Make vertical work plumb and make horizontal work level.
2. Where space is limited, install components to maximize space available for maintenance and ease of removal for replacement.

B. Comply with manufacturer's written instructions and recommendations for installing products in applications indicated.

C. Install products at the time and under conditions that will ensure satisfactory results as judged by Architect. Maintain conditions required for product performance until Substantial Completion.

D. Conduct construction operations, so no part of the Work is subjected to damaging operations or loading more than that expected during normal conditions of occupancy of type expected for Project.

E. Sequence the Work and allow adequate clearances to accommodate movement of construction items on-site and placement in permanent locations.

F. Tools and Equipment: Select tools or equipment that minimize production of excessive noise levels.

G. Templates: Obtain and distribute to the parties involved templates for Work specified to be factory prepared and field installed. Check Shop Drawings of other portions of the Work to confirm that adequate provisions are made for locating and installing products to comply with indicated requirements.

H. Attachment: Provide blocking and attachment plates and anchors and fasteners of adequate size and number to securely anchor each component in place, accurately located and aligned with other portions of the Work. Where size and type of attachments are not indicated, verify size and type required for load conditions with manufacturer.

1. Mounting Heights: Where mounting heights are not indicated, mount components at heights directed by Architect.
2. Allow for building movement, including thermal expansion and contraction.
3. Coordinate installation of anchorages. Furnish setting drawings, templates, and directions for installing anchorages, including sleeves, concrete inserts, anchor bolts, and items with integral anchors, that are to be embedded in concrete or masonry. Deliver such items to Project site in time for installation.

I. Joints: Make joints of uniform width. Where joint locations in exposed Work are not indicated, arrange joints for the best visual effect, as judged by Architect. Fit exposed connections together to form hairline joints.

J. Repair or remove and replace damaged, defective, or nonconforming Work.

1. Comply with Section 017700 "Closeout Procedures" for repairing or removing and replacing defective Work.

3.5 CUTTING AND PATCHING

A. Cutting and Patching Plan (Submittal): Prior to any cutting, submit a plan indicating locations, methods, temporary shoring/bracing, utility locating (GPR/X-ray as applicable), dust/noise control, protection of adjacent occupied areas, proposed patching materials/finishes, firestopping systems, and sequencing. Do not proceed until reviewed by Architect and (where structural elements are affected) the Structural Engineer.

B. General: Employ skilled workers to perform cutting and patching. Proceed with cutting and patching at the earliest feasible time, and complete without delay.

1. Cut in-place construction to provide for installation of other components or performance of other construction, and subsequently patch as required to restore surfaces to their original condition.

C. Existing Warranties: Remove, replace, patch, and repair materials and surfaces cut or damaged during installation or cutting and patching operations, by methods and with materials so as not to void existing warranties.

D. Temporary Support: Provide temporary support of Work to be cut.

E. Protection: Protect in-place construction during cutting and patching to prevent damage. Provide protection from adverse weather conditions for portions of Project that might be exposed during cutting and patching operations.

F. Adjacent Occupied Areas: Where interference with use of adjoining areas or interruption of free passage to adjoining areas is unavoidable, coordinate cutting and patching in accordance with requirements in Section 011000 "Summary."

G. Existing Utility Services and Mechanical/Electrical Systems: Where existing services/systems are required to be removed, relocated, or abandoned, bypass such services/systems before cutting to prevent interruption to occupied areas.

H. Cutting: Cut in-place construction by sawing, drilling, breaking, chipping, grinding, and similar operations, including excavation, using methods least likely to damage elements retained or adjoining construction. If possible, review proposed procedures with original Installer; comply with original Installer's written recommendations.

1. In general, use hand or small power tools designed for sawing and grinding, not hammering and chopping. Cut holes and slots neatly to minimum size required, and with minimum disturbance of adjacent surfaces. Temporarily cover openings when not in use.
2. Finished Surfaces: Cut or drill from the exposed or finished side into concealed surfaces.
3. Concrete and Masonry: Cut using a cutting machine, such as an abrasive saw or a diamond-core drill.
4. Excavating and Backfilling: Comply with requirements in applicable Sections where required by cutting and patching operations.
5. Mechanical and Electrical Services: Cut off pipe or conduit in walls or partitions to be removed. Cap, valve, or plug and seal remaining portion of pipe or conduit to prevent entrance of moisture or other foreign matter after cutting.
6. Proceed with patching after construction operations requiring cutting are complete.
7. Structural Penetrations: Before cutting or core drilling slabs, beams, load-bearing masonry, or shear walls, perform non-destructive testing (GPR or X-ray) to locate reinforcing and embedded items; submit results with the Cutting and Patching Plan. Obtain written acceptance from the Structural Engineer prior to cutting.

I. Patching: Patch construction by filling, repairing, refinishing, closing up, and similar operations following performance of other Work. Patch with durable seams that are as invisible as practicable, as judged by Architect. Provide materials and comply with installation requirements specified in other Sections, where applicable.

1. Inspection: Where feasible, test and inspect patched areas after completion to demonstrate physical integrity of installation.
2. Exposed Finishes: Restore exposed finishes of patched areas and extend finish restoration into retained adjoining construction in a manner that will eliminate evidence of patching and refinishing.
   a. Clean piping, conduit, and similar features before applying paint or other finishing materials.
   b. Restore damaged pipe covering to its original condition.
3. Floors and Walls: Where walls or partitions that are removed extend one finished area into another, patch and repair floor and wall surfaces in the new space. Provide an even surface of uniform finish, color, texture, and appearance. Remove in-place floor and wall coverings and replace with new materials, if necessary, to achieve uniform color and appearance.
   a. Where patching occurs in a painted surface, prepare substrate and apply primer and intermediate paint coats appropriate for substrate over the patch, and apply final paint coat over entire unbroken surface containing the patch, corner to corner of wall and edge to edge of ceiling. Provide additional coats until patch blends with adjacent surfaces.
4. Ceilings: Patch, repair, or rehang in-place ceilings as necessary to provide an even-plane surface of uniform appearance.

5. Exterior Building Enclosure: Patch components in a manner that restores enclosure to a weathertight condition and ensures thermal and moisture integrity of building enclosure.
6. 6. Rated/Barrier Assemblies: Restore fire-resistance, smoke, and acoustic ratings with listed systems matching the assembly (UL, etc.). Restore air, vapor, and weather barriers per the manufacturer's system and Division 07 requirements to maintain continuity and warranty. Provide inspection records for installed firestopping and enclosure tie-ins.

J. Cleaning: Clean areas and spaces where cutting and patching are performed. Remove paint, mortar, oils, putty, and similar materials from adjacent finished surfaces.

3.6 PROGRESS CLEANING

A. Clean Project site and work areas daily, including common areas. Enforce requirements strictly. Dispose of materials lawfully.

1. Comply with requirements in NFPA 241 for removal of combustible waste materials and debris.
2. Do not hold waste materials more than seven days during normal weather or three days if the temperature is expected to rise above 80 deg F.
3. Containerize hazardous and unsanitary waste materials separately from other waste. Mark containers appropriately and dispose of legally, according to regulations.
   a. Use containers intended for holding waste materials of type to be stored.
4. Coordinate progress cleaning for joint-use areas where Contractor and other contractors are working concurrently.

B. Site: Maintain Project site free of waste materials and debris.

C. Work Areas: Clean areas where Work is in progress to the level of cleanliness necessary for proper execution of the Work.

1. Remove liquid spills promptly.
2. Where dust would impair proper execution of the Work, broom-clean or vacuum the entire work area, as appropriate.

D. Installed Work: Keep installed work clean. Clean installed surfaces according to written instructions of manufacturer or fabricator of product installed, using only cleaning materials specifically recommended. If specific cleaning materials are not recommended, use cleaning materials that are not hazardous to health or property and that will not damage exposed surfaces.

E. Concealed Spaces: Remove debris from concealed spaces before enclosing the space.

F. Exposed Surfaces: Clean exposed surfaces and protect as necessary to ensure freedom from damage and deterioration at time of Substantial Completion.

G. Waste Disposal: Do not bury or burn waste materials on-site. Do not wash waste materials down sewers or into waterways. Comply with waste disposal requirements in Section 017419 "Construction Waste Management and Disposal."

H. During handling and installation, clean and protect construction in progress and adjoining materials already in place. Apply protective covering where required to ensure protection from damage or deterioration at Substantial Completion.

I. Clean and provide maintenance on completed construction as frequently as necessary through the remainder of the construction period. Adjust and lubricate operable components to ensure operability without damaging effects.

3.7 STARTING AND ADJUSTING

A. Coordinate startup and adjusting of equipment and operating components with requirements in Section 019113 "General Commissioning Requirements."

B. Start equipment and operating components to confirm proper operation. Remove malfunctioning units, replace with new units, and retest.

C. Adjust equipment for proper operation. Adjust operating components for proper operation without binding.

D. Test each piece of equipment to verify proper operation. Test and adjust controls and safeties. Replace damaged and malfunctioning controls and equipment.

E. Manufacturer's Field Service: Comply with qualification requirements in Section 014000 "Quality Requirements."

3.8 PROTECTION AND REPAIR OF INSTALLED CONSTRUCTION

A. Provide final protection and maintain conditions that ensure installed Work is without damage or deterioration at time of Substantial Completion.

B. Repair Work previously completed and subsequently damaged during construction period. Repair to like-new condition.

C. Protection of Existing Items: Provide protection and ensure that existing items to remain undisturbed by construction are maintained in condition that existed at commencement of the Work.

D. Comply with manufacturer's written instructions for temperature and relative humidity.

END OF SECTION 017300

SECTION 017419 - CONSTRUCTION WASTE MANAGEMENT AND DISPOSAL

PART 1 - GENERAL

1.1 RELATED DOCUMENTS

A. Drawings and general provisions of the Contract, including General and Supplementary Conditions and other Division 01 Specification Sections, apply to this Section.

1.2 SUMMARY

A. Section includes administrative and procedural requirements for the following:

1. Recycling nonhazardous demolition and construction waste.
2. Disposing of nonhazardous demolition and construction waste.

1.3 DEFINITIONS

A. Construction Waste: Building, structure, and site improvement materials and other solid waste resulting from construction, remodeling, renovation, or repair operations. Construction waste includes packaging.

B. Demolition Waste: Building, structure, and site improvement materials resulting from demolition operations.

C. Disposal: Removal of demolition or construction waste and subsequent salvage, sale, recycling, or deposit in landfill, incinerator acceptable to authorities having jurisdiction, or designated spoil areas on Owner's property.

D. Recycle: Recovery of demolition or construction waste for subsequent processing in preparation for reuse.

E. Salvage: Recovery of demolition or construction waste and subsequent sale or reuse in another facility.

F. Salvage and Reuse: Recovery of demolition or construction waste and subsequent incorporation into the Work.

1.4 MATERIALS OWNERSHIP

A. Unless otherwise indicated, demolition and construction waste become property of Contractor.

B. Historic items, relics, antiques, and similar objects including, but not limited to, cornerstones and their contents, commemorative plaques and tablets, and other items of interest or value to Owner that may be uncovered during demolition remain the property of Owner.

1. Carefully salvage in a manner to prevent damage and promptly return to Owner.

PART 2 - PRODUCTS

2.1 PERFORMANCE REQUIREMENTS

A. General: Achieve end-of-Project rates for salvage/recycling of 50 percent by weight of total nonhazardous solid waste generated by the Work. Practice efficient waste management in the use of materials in the course of the Work. Use all reasonable means to divert construction and demolition waste from landfills and incinerators. Facilitate recycling and salvage of materials. Provide monthly summary reports documenting quantities (by weight or volume) of material diverted from landfill versus total waste generated. Submit final summary with closeout documents.

1. Demolition Waste:
   a. Concrete.
   b. Brick.
   c. Concrete masonry units.

PART 3 - EXECUTION

3.1 WASTE MANAGEMENT PLAN

A. Submittal: Submit a Construction Waste Management Plan within 15 days after Notice to Proceed identifying targeted diversion rates, waste haulers/recycling facilities, and material categories to be tracked. Do not begin demolition or major construction until the plan has been reviewed.”

3.2 PLAN IMPLEMENTATION

A. General: Implement approved waste management plan. Provide handling, containers, storage, signage, transportation, and other items as required to implement waste management plan during the entire duration of the Contract.

1. Comply with operation, termination, and removal requirements in Section 015000 "Temporary Facilities and Controls."

B. Training: Train workers, subcontractors, and suppliers on proper waste management procedures, as appropriate for the Work.

1. Distribute waste management plan to everyone concerned within three days of submittal return.
2. Distribute waste management plan to entities when they first begin work on-site. Review plan procedures and locations established for salvage, recycling, and disposal.

C. Site Access and Temporary Controls: Conduct waste management operations to ensure minimum interference with roads, streets, walks, walkways, and other adjacent occupied and used facilities.

1. Designate and label specific areas on Project site necessary for separating materials that are to be salvaged and recycled.
2. Comply with Section 015000 "Temporary Facilities and Controls" for controlling dust and dirt, environmental protection, and noise control.

3.3 RECYCLING DEMOLITION AND CONSTRUCTION WASTE, GENERAL

A. General: Recycle paper and beverage containers used by on-site workers.

B. Preparation of Waste: Prepare and maintain recyclable waste materials according to recycling or reuse facility requirements. Maintain materials free of dirt, adhesives, solvents, petroleum contamination, and other substances deleterious to the recycling process.

3.4 RECYCLING DEMOLITION WASTE

A. Concrete: Remove reinforcement and other metals from concrete and sort with other metals.

B. Masonry: Remove metal reinforcement, anchors, and ties from masonry and sort with other metals.

1. Clean and stack undamaged, whole masonry units on wood pallets.

C. Wood Materials: Sort and stack members according to size, type, and length. Separate lumber, engineered wood products, panel products, and treated wood materials.

D. Metals: Separate metals by type.

1. Structural Steel: Stack members according to size, type of member, and length.
2. Remove and dispose of bolts, nuts, washers, and other rough hardware.

E. Gypsum Board: Stack large clean pieces on wood pallets or in container and store in a dry location. Remove edge trim and sort with other metals. Remove and dispose of fasteners.

F. Acoustical Ceiling Panels and Tile: Stack large clean pieces on wood pallets and store in a dry location.

G. Piping: Reduce piping to straight lengths and store by material and size. Separate supports, hangers, valves, sprinklers, and other components by material and size.

H. Conduit: Reduce conduit to straight lengths and store by material and size.

3.5 RECYCLING CONSTRUCTION WASTE

A. Packaging:

1. Cardboard and Boxes: Break down packaging into flat sheets. Bundle and store in a dry location.
2. Polystyrene Packaging: Separate and bag materials.
3. Pallets: As much as possible, require deliveries using pallets to remove pallets from Project site. For pallets that remain on-site, break down pallets into component wood pieces and comply with requirements for recycling wood.
4. Crates: Break down crates into component wood pieces and comply with requirements for recycling wood.

B. Wood Materials:

1. Clean Cut-Offs of Lumber: Grind or chip into small pieces.
2. Clean Sawdust: Bag sawdust that does not contain painted or treated wood.

a. Comply with requirements in Section 329300 "Plants" for use of clean sawdust as organic mulch.

C. Gypsum Board: Stack large clean pieces on wood pallets or in container and store in a dry location.

D. Paint: Seal containers and store by type.

3.6 DISPOSAL OF WASTE

A. General: Except for items or materials to be salvaged or recycled, remove waste materials from Project site and legally dispose of them in a landfill or incinerator acceptable to authorities having jurisdiction.

1. Except as otherwise specified, do not allow waste materials that are to be disposed of accumulate on-site.
2. Remove and transport debris in a manner that will prevent spillage on adjacent surfaces and areas.

B. Burning: Do not burn waste materials.

END OF SECTION 017419

SECTION 017700 - CLOSEOUT PROCEDURES

PART 1 - GENERAL

1.1 RELATED DOCUMENTS

A. Drawings and general provisions of the Contract, including General and Supplementary Conditions and other Division 01 Specification Sections, apply to this Section.

1.2 SUMMARY

A. Section includes administrative and procedural requirements for Contract closeout, including, but not limited to, the following:

1. Substantial Completion procedures.
2. Final completion procedures.
3. Warranties.
4. Final cleaning.

B. Related Requirements:

1. Section 012900 "Payment Procedures" for requirements for Applications for Payment for Substantial Completion and Final Completion.

1.3 DEFINITIONS

A. List of Incomplete Items: Contractor-prepared list of items to be completed or corrected, prepared for the Architect's use prior to Architect's inspection, to determine if the Work is substantially complete.

1.4 ACTION SUBMITTALS

A. Contractor's List of Incomplete Items: Initial submittal at Substantial Completion.

B. Certified List of Incomplete Items: Final submittal at Final Completion.

1.5 CLOSEOUT SUBMITTALS

A. Certificates of Release: From authorities having jurisdiction.

B. Certificate of Insurance: For continuing coverage.

C. Field Report: For pest-control inspection.

1.6 MAINTENANCE MATERIAL SUBMITTALS

1.7 SUBSTANTIAL COMPLETION PROCEDURES

A. Contractor's List of Incomplete Items: Prepare and submit a list of items to be completed and corrected (Contractor's "punch list"), indicating the value of each item on the list and reasons why the Work is incomplete.

B. Procedures Prior to Substantial Completion: Complete the following a minimum of 5 days prior to requesting inspection for determining date of Substantial Completion. List items below that are incomplete at time of request.

1. Advise Owner of pending insurance changeover requirements.
2. Make final changeover of permanent locks and deliver keys to Owner. Advise Owner's personnel of changeover in security provisions.
3. Complete startup and testing of systems and equipment.
4. Perform preventive maintenance on equipment used prior to Substantial Completion.
5. Instruct Owner's personnel in operation, adjustment, and maintenance of products, equipment, and systems. Submit demonstration and training video recordings specified in Section 017900 "Demonstration and Training."
6. Advise Owner of changeover in utility services.
7. Terminate and remove temporary facilities from Project site, along with mockups, construction tools, and similar elements.
8. Complete final cleaning requirements.
9. Touch up paint and otherwise repair and restore marred exposed finishes to eliminate visual defects.

C. Inspection: Submit a written request for inspection to determine Substantial Completion a minimum of 5 days prior to date the Work will be completed and ready for final inspection and tests. On receipt of request, Architect and Construction Manager will either proceed with inspection or notify Contractor of unfulfilled requirements. Architect will prepare the Certificate of Substantial Completion after inspection or will notify Contractor of items, either on Contractor's list or additional items identified by Architect, that must be completed or corrected before certificate will be issued.

1. Request reinspection when the Work identified in previous inspections as incomplete is completed or corrected.
2. Results of completed inspection will form the basis of requirements for Final Completion.

1.8 FINAL COMPLETION PROCEDURES

A. Submittals Prior to Final Completion: Before requesting final inspection for determining Final Completion, complete the following:

1. Submit a final Application for Payment in accordance with Section 012900 "Payment Procedures."
2. Certified List of Incomplete Items: Submit certified copy of Architect's Substantial Completion inspection list of items to be completed or corrected (punch list), endorsed and dated by Architect. A certified copy of the list shall state that each item has been completed or otherwise resolved for acceptance.
3. Certificate of Insurance: Submit evidence of final, continuing insurance coverage complying with insurance requirements.
4. Submit Final Completion photographic documentation.

5. Submit final electronic copies of operation and maintenance manuals in accordance with Section 017823 ‘Operation and Maintenance Data.’ Verify that manuals reflect all approved substitutions and field changes prior to requesting final inspection.

B. Inspection: Submit a written request for final inspection to determine acceptance a minimum of 10 days prior to date the Work will be completed and ready for final inspection and tests. On receipt of request, Architect and Construction Manager will either proceed with inspection or notify Contractor of unfulfilled requirements. Architect will prepare a final Certificate for Payment after inspection or will notify Contractor of construction that must be completed or corrected before certificate will be issued.

1. Request reinspection when the Work identified in previous inspections as incomplete is completed or corrected.

1.9 LIST OF INCOMPLETE ITEMS

A. Organization of List: Include name and identification of each space and area affected by construction operations for incomplete items and items needing correction including, if necessary, areas disturbed by Contractor that are outside the limits of construction.

1. Organize list of spaces in sequential order, starting with exterior areas first and proceeding from lowest floor to highest floor, listed by room or space number.
2. Organize items applying to each space by major element, including categories for ceilings, individual walls, floors, equipment, and building systems.
3. Include the following information at the top of each page:
   a. Project name.
   b. Date.
   c. Name of Architect and Construction Manager.
   d. Name of Contractor.
   e. Page number.
4. Submit list of incomplete items in the following format:
   a. PDF Electronic File: Architect, through Construction Manager, will return annotated file.

1.10 SUBMITTAL OF PROJECT WARRANTIES

A. Time of Submittal: Submit written warranties on request of Architect for designated portions of the Work where warranties are indicated to commence on dates other than date of Substantial Completion, or when delay in submittal of warranties might limit Owner's rights under warranty.

B.

C. Organize warranty documents into an orderly sequence based on the table of contents of Project Manual.

D. Warranty Electronic File: Provide warranties and bonds in PDF format. Assemble complete warranty and bond submittal package into a single electronic PDF file with bookmarks enabling navigation to each item. Provide bookmarked table of contents at beginning of document.

1. Submit on digital media acceptable to Architect.

E. Warranties in Paper Form:

1. Bind warranties and bonds in heavy-duty, three-ring, vinyl-covered, loose-leaf binders, thickness as necessary to accommodate contents, and sized to receive 8-1/2-by-11-inch paper.
2. Provide heavy paper dividers with plastic-covered tabs for each separate warranty. Mark tab to identify the product or installation. Provide a typed description of the product or installation, including the name of the product and the name, address, and telephone number of Installer.
3. Identify each binder on the front and spine with the typed or printed title "WARRANTIES," Project name, and name of Contractor.

F. Provide additional copies of each warranty to include in operation and maintenance manuals.

PART 2 - PRODUCTS

2.1 MATERIALS

A. Cleaning Agents: Use cleaning materials and agents recommended by manufacturer or fabricator of the surface to be cleaned. Do not use cleaning agents that are potentially hazardous to health or property or that might damage finished surfaces.

PART 3 - EXECUTION

3.1 FINAL CLEANING

A. General: Perform final cleaning. Conduct cleaning and waste-removal operations to comply with local laws and ordinances and Federal and local environmental and antipollution regulations.

B. Cleaning: Employ experienced workers or professional cleaners for final cleaning. Clean each surface or unit to condition expected in an average commercial building cleaning and maintenance program. Include removal of protective coverings, adhesive residues, construction markings, and temporary labels. Final cleaning shall be performed by the Contractor’s professional cleaning subcontractor prior to Owner occupancy and verified by the Architect. Comply with manufacturer's written instructions.

1. Complete the following cleaning operations before requesting inspection for certification of Final Completion for entire Project:
   a. Clean Project site of rubbish, waste material, litter, and other foreign substances.
   b. Sweep paved areas broom clean. Remove petrochemical spills, stains, and other foreign deposits.
   c. Rake grounds that are not planted, mulched, or paved to a smooth, even-textured surface.
   d. Remove tools, construction equipment, machinery, and surplus material from Project site.
   e.
   f. Clean exposed exterior and interior hard-surfaced finishes to a dirt-free condition, free of stains, films, and similar foreign substances. Avoid disturbing natural weathering of exterior surfaces. Restore reflective surfaces to their original condition.
   g. Remove debris and surface dust from limited-access spaces, including roofs, plenums, shafts, trenches, equipment vaults, manholes, attics, and similar spaces.

h. Clean flooring, removing debris, dirt, and staining; clean according to manufacturer's recommendations.
i. Vacuum and mop concrete.
j. Clean transparent materials, including mirrors and glass in doors and windows. Remove glazing compounds and other noticeable, vision-obscuring materials. Polish mirrors and glass, taking care not to scratch surfaces.
k. Remove labels that are not permanent.

3.2 REPAIR OF THE WORK

A. Complete repair and restoration operations required by Section 017300 "Execution" before requesting inspection for determination of Substantial Completion.

END OF SECTION 017700

SECTION 017823 - OPERATION AND MAINTENANCE DATA

PART 1 - GENERAL

1.1 RELATED DOCUMENTS

A. Drawings and general provisions of the Contract, including General and Supplementary Conditions and other Division 01 Specification Sections, apply to this Section.

1.2 SUMMARY

A. Section includes administrative and procedural requirements for preparing operation and maintenance manuals, including the following:

1. Operation and maintenance documentation directory manuals.
2. Systems and equipment operation manuals.
3. Systems and equipment maintenance manuals.
4. Product maintenance manuals.

B. Related Requirements:

1. Section 013300 "Submittal Procedures" for submitting copies of submittals for operation and maintenance manuals.

1.3 DEFINITIONS

A. System: An organized collection of parts, equipment, or subsystems united by regular interaction.

B. Subsystem: A portion of a system with characteristics similar to a system.

1.4 CLOSEOUT SUBMITTALS

A. Submit operation and maintenance manuals indicated. Provide content for each manual as specified in individual Specification Sections, and as reviewed and approved at the time of Section submittals. Submit reviewed manual content formatted and organized as required by this Section.

1. Architect will comment on whether content of operation and maintenance submittals is acceptable.
2. Where applicable, clarify and update reviewed manual content to correspond to revisions and field conditions.

B. Preliminary Table of Contents: Submit a draft table of contents for each required manual within 60 days of Notice to Proceed or prior to rough-in of major systems, whichever occurs first, identifying proposed structure, system groupings, and file naming conventions for review by Architect and Owner prior to full assembly.

C. Format: Submit operation and maintenance manuals in the following format:

1. Submit on USB flash drive. Enable reviewer comments on draft submittals.
2. Submit three paper copies. Architect will return (1) copies.

D. Final Manual Submittal: Submit each manual in final form prior to requesting inspection for Substantial Completion and at least 15 days before commencing demonstration and training. Architect will return copy with comments.

1. Correct or revise each manual to comply with Architect's comments. Submit copies of each corrected manual within (10) days of receipt of Architect's comments and prior to commencing demonstration and training.

E. Comply with Section 017700 "Closeout Procedures" for schedule for submitting operation and maintenance documentation.

1.5 FORMAT OF OPERATION AND MAINTENANCE MANUALS

A. Manuals, Electronic Files: Submit manuals in the form of a multiple file composite electronic PDF file for each manual type required.

1. Electronic Files: Use electronic files prepared by manufacturer where available. Where scanning of paper documents is required, configure scanned file for minimum readable file size.
2. File Names and Bookmarks: Bookmark individual documents based on file names. Name document files to correspond to system, subsystem, and equipment names used in manual directory and table of contents. Group documents for each system and subsystem into individual composite bookmarked files, then create composite manual, so that resulting bookmarks reflect the system, subsystem, and equipment names in a readily navigated file tree. Configure electronic manual to display bookmark panel on opening file.

B. Manuals, Paper Copy: Submit manuals in the form of hard-copy, bound and labeled volumes.

1. Binders: Heavy-duty, three-ring, vinyl-covered, binders, in thickness necessary to accommodate contents, sized to hold 8-1/2-by-11-inch paper; with clear plastic sleeve on spine to hold label describing contents and with pockets inside covers to hold folded oversize sheets.
   a. If two or more binders are necessary to accommodate data of a system, organize data in each binder into groupings by subsystem and related components. Cross-reference other binders if necessary to provide essential information for proper operation or maintenance of equipment or system.
   b. Identify each binder on front and spine, with printed title "OPERATION AND MAINTENANCE MANUAL," Project title or name, and subject matter of contents , and indicate Specification Section number on bottom of spine. Indicate volume number for multiple-volume sets.
2. Dividers: Heavy-paper dividers with plastic-covered tabs for each section of the manual. Mark each tab to indicate contents. Include typed list of products and major components of equipment included in the section on each divider, cross-referenced to Specification Section number and title of Project Manual.
3. Drawings: Attach reinforced, punched binder tabs on drawings and bind with text.
   a. If oversize drawings are necessary, fold drawings to same size as text pages and use as foldouts.
   b. If drawings are too large to be used as foldouts, fold and place drawings in labeled envelopes and bind envelopes in rear of manual. At appropriate locations in

manual, insert typewritten pages indicating drawing titles, descriptions of contents, and drawing locations.

1.6 REQUIREMENTS FOR EMERGENCY, OPERATION, AND MAINTENANCE MANUALS

A. Organization of Manuals: Unless otherwise indicated, organize each manual into a separate section for each system and subsystem, and a separate section for each piece of equipment not part of a system. Each manual shall contain the following materials, in the order listed:

1. Title page.
2. Table of contents.
3. Manual contents.

B. Title Page: Include the following information:

1. Subject matter included in manual.
2. Name and address of Project.
3. Name and address of Owner.
4. Date of submittal.
5. Name and contact information for Contractor.
6. Name and contact information for Construction Manager.
7. Name and contact information for Architect.

C. Table of Contents: List each product included in manual, identified by product name, indexed to the content of the volume, and cross-referenced to Specification Section number in Project Manual.

1. If operation or maintenance documentation requires more than one volume to accommodate data, include comprehensive table of contents for all volumes in each volume of the set.

D. Manual Contents: Organize into sets of manageable size. Arrange contents alphabetically by system, subsystem, and equipment. If possible, assemble instructions for subsystems, equipment, and components of one system into a single binder.

E. Identification: In the documentation directory and in each operation and maintenance manual, identify each system, subsystem, and piece of equipment with same designation used in the Contract Documents. If no designation exists, assign a designation according to ASHRAE Guideline 4, "Preparation of Operating and Maintenance Documentation for Building Systems."

1.7 SYSTEMS AND EQUIPMENT OPERATION MANUALS

A. Systems and Equipment Operation Manual: Assemble a complete set of data indicating operation of each system, subsystem, and piece of equipment not part of a system. Include information required for daily operation and management, operating standards, and routine and special operating procedures.

1. Engage a factory-authorized service representative to assemble and prepare information for each system, subsystem, and piece of equipment not part of a system.
2. Prepare a separate manual for each system and subsystem, in the form of an instructional manual for use by Owner's operating personnel.

B. Content: In addition to requirements in this Section, include operation data required in individual Specification Sections and the following information:

1. System, subsystem, and equipment descriptions. Use designations for systems and equipment indicated on Contract Documents.
2. Performance and design criteria if Contractor has delegated design responsibility.
3. Operating standards.
4. Operating procedures.
5. Operating logs.
6. Wiring diagrams.
7. Control diagrams.
8. Piped system diagrams.
9. Precautions against improper use.
10. License requirements including inspection and renewal dates.

C. Descriptions: Include the following:

1. Product name and model number. Use designations for products indicated on Contract Documents.
2. Manufacturer's name.
3. Equipment identification with serial number of each component.
4. Equipment function.
5. Operating characteristics.
6. Limiting conditions.
7. Performance curves.
8. Engineering data and tests.
9. Complete nomenclature and number of replacement parts.

D. Operating Procedures: Include the following, as applicable:

1. Startup procedures.
2. Equipment or system break-in procedures.
3. Routine and normal operating instructions.
4. Regulation and control procedures.
5. Instructions on stopping.
6. Normal shutdown instructions.
7. Seasonal and weekend operating instructions.
8. Required sequences for electric or electronic systems.
9. Special operating instructions and procedures.

E. Systems and Equipment Controls: Describe the sequence of operation, and diagram controls as installed.

F. Piped Systems: Diagram piping as installed and identify color coding where required for identification.

1.8 SYSTEMS AND EQUIPMENT MAINTENANCE MANUALS

A. Systems and Equipment Maintenance Manuals: Assemble a complete set of data indicating maintenance of each system, subsystem, and piece of equipment not part of a system. Include manufacturers' maintenance documentation, preventive maintenance procedures and frequency, repair procedures, wiring and systems diagrams, lists of spare parts, and warranty information.

1. Engage a factory-authorized service representative to assemble and prepare information for each system, subsystem, and piece of equipment not part of a system.
2. Prepare a separate manual for each system and subsystem, in the form of an instructional manual for use by Owner's operating personnel.

B. Content: For each system, subsystem, and piece of equipment not part of a system, include source information, manufacturers' maintenance documentation, maintenance procedures, maintenance and service schedules, spare parts list and source information, maintenance service contracts, and warranties and bonds as described below.

C. Source Information: List each system, subsystem, and piece of equipment included in manual, identified by product name and arranged to match manual's table of contents. For each product, list name, address, and telephone number of Installer or supplier and maintenance service agent, and cross-reference Specification Section number and title in Project Manual and drawing or schedule designation or identifier where applicable.

D. Manufacturers' Maintenance Documentation: Include the following information for each component part or piece of equipment:

1. Standard maintenance instructions and bulletins; include only sheets pertinent to product or component installed. Mark each sheet to identify each product or component incorporated into the Work. If data include more than one item in a tabular format, identify each item using appropriate references from the Contract Documents. Identify data applicable to the Work and delete references to information not applicable.
   a. Prepare supplementary text if manufacturers' standard printed data are not available and where the information is necessary for proper operation and maintenance of equipment or systems.
2. Drawings, diagrams, and instructions required for maintenance, including disassembly and component removal, replacement, and assembly.
3. Identification and nomenclature of parts and components.
4. List of items recommended to be stocked as spare parts.

E. Maintenance Procedures: Include the following information and items that detail essential maintenance procedures:

1. Test and inspection instructions.
2. Troubleshooting guide.
3. Precautions against improper maintenance.
4. Disassembly; component removal, repair, and replacement; and reassembly instructions.
5. Aligning, adjusting, and checking instructions.
6. Demonstration and training video recording, if available.

F. Maintenance and Service Schedules: Include service and lubrication requirements, list of required lubricants for equipment, and separate schedules for preventive and routine maintenance and service with standard time allotment.

1. Scheduled Maintenance and Service: Tabulate actions for daily, weekly, monthly, quarterly, semiannual, and annual frequencies.
2. Maintenance and Service Record: Include manufacturers' forms for recording maintenance.

G. Spare Parts List and Source Information: Include lists of replacement and repair parts, with parts identified and cross-referenced to manufacturers' maintenance documentation and local sources of maintenance materials and related services.

H. Warranties and Bonds: Include copies of warranties and bonds and lists of circumstances and conditions that would affect validity of warranties or bonds.

1. Include procedures to follow and required notifications for warranty claims.

I. Drawings: Prepare drawings supplementing manufacturers' printed data to illustrate the relationship of component parts of equipment and systems and to illustrate control sequence and flow diagrams. Coordinate these drawings with information contained in record Drawings to ensure correct illustration of completed installation.

1. Do not use original project record documents as part of maintenance manuals.

1.9 PRODUCT MAINTENANCE MANUALS

A. Product Maintenance Manual: Assemble a complete set of maintenance data indicating care and maintenance of each product, material, and finish incorporated into the Work.

B. Content: Organize manual into a separate section for each product, material, and finish. Include source information, product information, maintenance procedures, repair materials and sources, and warranties and bonds, as described below.

C. Source Information: List each product included in manual, identified by product name and arranged to match manual's table of contents. For each product, list name, address, and telephone number of Installer or supplier and maintenance service agent, and cross-reference Specification Section number and title in Project Manual and drawing or schedule designation or identifier where applicable.

D. Product Information: Include the following, as applicable:

1. Product name and model number.
2. Manufacturer's name.
3. Reordering information for specially manufactured products.

E. Maintenance Procedures: Include manufacturer's written recommendations and the following:

1. Inspection procedures.
2. Types of cleaning agents to be used and methods of cleaning.
3. List of cleaning agents and methods of cleaning detrimental to product.
4. Schedule for routine cleaning and maintenance.
5. Repair instructions.

F. Repair Materials and Sources: Include lists of materials and local sources of materials and related services.

G. Warranties and Bonds: Include copies of warranties and bonds and lists of circumstances and conditions that would affect validity of warranties or bonds.

1. Include procedures to follow and required notifications for warranty claims.

PART 2 - PRODUCTS (Not Used)

PART 3 - EXECUTION (Not Used)

END OF SECTION 017823

SECTION 017839 - PROJECT RECORD DOCUMENTS

PART 1 - GENERAL

1.1 RELATED DOCUMENTS

A. Drawings and general provisions of the Contract, including General and Supplementary Conditions and other Division 01 Specification Sections, apply to this Section.

1.2 SUMMARY

A. Section includes administrative and procedural requirements for Project Record Documents, including the following:

1. Record Drawings.
2. Record specifications.
3. Record Product Data.

B. Related Requirements:

1. Section 017300 "Execution" for final property survey.
2. Section 017700 "Closeout Procedures" for general closeout procedures.
3. Section 017823 "Operation and Maintenance Data" for operation and maintenance manual requirements.

1.3 CLOSEOUT SUBMITTALS

A. Record Drawings: Comply with the following:

1. Number of Copies: Submit one set(s) of marked-up record prints.
2. Number of Copies: Submit copies of Record Drawings as follows:
   a. Initial Submittal:
      1) Submit one paper-copy set(s) of marked-up record prints.
      2) Submit PDF electronic files of scanned record prints and one set(s) of file prints.
      3) Architect will indicate whether general scope of changes, additional information recorded, and quality of drafting are acceptable.
   b. Final Submittal:
      1) Submit one paper-copy set(s) of marked-up record prints.
      2) Submit PDF electronic files of scanned Record Prints and one set(s) of file prints.
      3) Print each drawing, whether or not changes and additional information were recorded.
   c. Final Submittal:
      1) Submit one paper-copy set(s) of marked-up record prints.
      2) Submit Record Digital Data Files and one set(s) of Record Digital Data File plots.
      3) Plot each drawing file, whether or not changes and additional information were recorded.

B. Record Specifications: Submit annotated PDF electronic files and one paper copies of Project's Specifications, including addenda and Contract modifications.

C. Record Product Data: Submit annotated PDF electronic files and directories and one paper copies of each submittal.

1. Where record Product Data are required as part of operation and maintenance manuals, submit duplicate marked-up Product Data as a component of manual.

1.4 RECORD DRAWINGS

A. Record Prints: Maintain one set of marked-up paper copies of the Contract Drawings and Shop Drawings, incorporating new and revised drawings as modifications are issued.

1. Preparation: Mark record prints to show the actual installation, where installation varies from that shown originally. Require individual or entity who obtained record data, whether individual or entity is Installer, subcontractor, or similar entity, to provide information for preparation of corresponding marked-up record prints.
   a. Give particular attention to information on concealed elements that would be difficult to identify or measure and record later.
   b. Accurately record information in an acceptable drawing technique.
   c. Record data as soon as possible after obtaining it.
   d. Record and check the markup before enclosing concealed installations.
   e. Cross-reference record prints to corresponding photographic documentation.
2. Content: Types of items requiring marking include, but are not limited to, the following:
   a. Dimensional changes to Drawings.
   b. Revisions to details shown on Drawings.
   c. Depths of foundations.
   d. Locations and depths of underground utilities.
   e. Revisions to routing of piping and conduits.
   f. Revisions to electrical circuitry.
   g. Actual equipment locations.
   h. Duct size and routing.
   i. Locations of concealed internal utilities.
   j. Changes made by Change Order or Construction Change Directive.
   k. Changes made following Architect's written orders.
   l. Details not on the original Contract Drawings.
   m. Field records for variable and concealed conditions.
   n. Record information on the Work that is shown only schematically.
3. Mark the Contract Drawings and Shop Drawings completely and accurately. Use personnel proficient at recording graphic information in production of marked-up record prints.
4. Mark record prints with erasable, red-colored pencil. Use other colors to distinguish between changes for different categories of the Work at same location.
5. Mark important additional information that was either shown schematically or omitted from original Drawings.
6. Note Construction Change Directive numbers, alternate numbers, Change Order numbers, and similar identification, where applicable.

B. Record Digital Data Files: Immediately before inspection for Certificate of Substantial Completion, review marked-up record prints with Architect and Construction Manager. When authorized, prepare a full set of corrected digital data files of the Contract Drawings, as follows:

1. Format: Annotated PDF electronic file.
2.

3. Incorporate changes and additional information previously marked on record prints. Delete, redraw, and add details and notations where applicable.
4. Refer instances of uncertainty to Architect through Construction Manager for resolution.
5. Architect will furnish Contractor with one set of digital data files of the Contract Drawings for use in recording information.
    a. See Section 013100 "Project Management and Coordination" for requirements related to use of Architect's digital data files.
    b. Architect will provide data file layer information. Record markups in separate layers.

C. Format: Identify and date each Record Drawing; include the designation "PROJECT RECORD DRAWING" in a prominent location.

1. Record Prints: Organize record prints into manageable sets. Bind each set with durable paper cover sheets. Include identification on cover sheets.
2. Format: Annotated PDF electronic file.
3. Record Digital Data Files: Organize digital data information into separate electronic files that correspond to each sheet of the Contract Drawings. Name each file with the sheet identification. Include identification in each digital data file.
4. Identification: As follows:
    a. Project name.
    b. Date.
    c. Designation "PROJECT RECORD DRAWINGS."
    d. Name of Architect and Construction Manager.
    e. Name of Contractor.

1.5 RECORD SPECIFICATIONS

A. Preparation: Mark Specifications to indicate the actual product installation, where installation varies from that indicated in Specifications, addenda, and Contract modifications.

1. Give particular attention to information on concealed products and installations that cannot be readily identified and recorded later.
2. Mark copy with the proprietary name and model number of products, materials, and equipment furnished, including substitutions and product options selected.
3. Record the name of manufacturer, supplier, Installer, and other information necessary to provide a record of selections made.
4. For each principal product, indicate whether Record Product Data has been submitted in operation and maintenance manuals instead of submitted as Record Product Data.
5. Note related Change Orders, Record Product Data, and Record Drawings where applicable.

B. Format: Submit record specifications as scanned PDF electronic file(s) of marked-up paper copy of Specifications.

1.6 RECORD PRODUCT DATA

A. Recording: Maintain one copy of each submittal during the construction period for Project Record Document purposes. Post changes and revisions to Project Record Documents as they occur; do not wait until end of Project.

B. Preparation: Mark Product Data to indicate the actual product installation where installation varies substantially from that indicated in Product Data submittal.

1. Give particular attention to information on concealed products and installations that cannot be readily identified and recorded later.
2. Include significant changes in the product delivered to Project site and changes in manufacturer's written instructions for installation.
3. Note related Change Orders, Record Specifications, and Record Drawings where applicable.
4. Cross-reference all record drawings, specifications, and product data within the operation and maintenance manuals required by Section 017823 to ensure consistent information across deliverables.

C. Format: Submit Record Product Data as scanned PDF electronic file(s) of marked-up paper copy of Product Data.

1. Include Record Product Data directory organized by Specification Section number and title, electronically linked to each item of Record Product Data.

PART 2 - PRODUCTS (Not Used)

PART 3 - EXECUTION (Not Used)

END OF SECTION 017839

SECTION 020000 - SITE CONDITIONS

PART 1 - GENERAL

1.10 SECTION INCLUDES

A. Description of Site
B. Geotechnical Data

1.11 RELATED SECTIONS

A. Invitation to Bid
B. General Conditions of the Contract

1.12 DISCLAIMER

A. Data concerning the site and subsurface materials, conditions, or structures, is based upon this information, which has been obtained by the Owner for the Engineer's use in designing the project. The Engineer does not represent, warranty, or guarantee and assumes no responsibility for the accuracy or completeness of the data or that the materials actually encountered in the prosecution of the Work, or any part thereof, will be of the same character as those indicated by the data.

1.13 DESCRIPTION OF SITE

A. Haddonfield High School: Located at **401 Kings Highway East, Haddonfield, NJ 08033**

1. Utility and boundary information indicated on the site drawings is taken from EXISTING CONDITIONS REFERENCES A SURVEY PREPARED BY LAN ASSOCIATES, INC., MIDLAND PARK, NEW JERSEY. TITLED: "BOUNDARY & TOPOGRAPHIC SURVEY", SIGNED BY MATTHEW M. WEBB, PLS LIC. NO 24GS04330200 AND DATED 06-16-2025.
2. Utility and boundary information indicated on the site drawings is taken from EXISTING CONDITIONS REFERENCES A SURVEY PREPARED BY LAN ASSOCIATES, INC., MIDLAND PARK, NEW JERSEY. TITLED: "PARTIAL TOPOGRAPHIC SURVEY", SIGNED BY MATTHEW M. WEBB, PLS LIC. NO 24GS04330200 AND DATED 06-16-2025.

B. J. Fithian Tatem Elementary School: Located at **1 Glover Ave., Haddonfield, NJ 08033**

1. Existing conditions are taken from a survey prepared by LAN Associates Inc., Midland Park, NJ. Titled "PARTIAL TOPOGRAPHIC SURVEY" signed by Matthew M. Webb, PLS Lic. NO 24GS04330200 and dated 2026-06-04.
2. Utilities on the site were marked out by GPRS on 2025-11-05 and were captured by LAN Associates' survey team. The non-survey grade findings map has been included as Attachment #4 to this specification section.
3. Additional site conditions, generally outside the project area, are taken from an existing conditions plan prepared by Charles L. Wlaton Jr, PE & PLS No. 24GB01580000 dated 2016-05-24.

1.14 GEOTECHNICAL DATA

A. Investigations: Subsurface explorations of the sites were contracted by the Owner and were performed by Underwood Engineering Company. The geotechnical investigation report is dated **January 30, 2026**. This report is included as Attachment #1 to this specification section.

1.15 SOIL TESTING RESULTS

A. Test Pit & Infiltration Investigations: Field and laboratory soil tests were contracted by the Owner and were performed by Underwood Engineering Company. The soil testing report is dated **January 22, 2026.** This report is included as Attachment #2 to this specification section.

1.16 SOIL CONSERVATION

A. The contractor shall comply with all soil erosion and sediment control practices in accordance with the "New Jersey State Standards for Soil Erosion and Sediment Control", and as directed by the local Soil Conservation District representative and the engineer.

B. The DelAtlantic Soil Conservation District must be notified, in writing, at least 72 hours prior to any land disturbance and a pre-construction meeting held. Contractor to carbon copy the engineer and owner on the notification.

END OF SECTION 020000

SOIL AND FOUNDATION
ENGINEERING REPORT

PROPOSED GYMNASIUM & ATHLETIC FIELD LIGHTING
HOPKINS PARCEL
HADDONFIELD MEMORIAL HIGH SCHOOL
BLOCK 13, LOT 25
401 KINGS HIGHWAY EAST
BOROUGH OF HADDONFIELD
CAMDEN COUNTY, NEW JERSEY

FOR

HADDONFIELD BOARD OF EDUCATION
c/o LAN ASSOCIATES

January 30, 2026
UNDERWOOD ENGINEERING COMPANY
U.E. Reference No.: 5499-20340-1
W.O. #: 25-9437

UNDERWOOD ENGINEERING COMPANY

SOIL & FOUNDATION ENGINEERING

1 Keystone Avenue. Suite 300, Cherry Hill, NJ 08003

Patrick M. Underwood - **President** **Phone (856) 933-1818**

1/30/2026

Haddonfield Board of Education c/o Lan Associates
95 Grove Street
Haddonfield, NJ 08033

RE : Soil and Foundation Engineering Report
Hopkins Parcel Athletic Facility Improvements
Proposed Gymnasium & Athletic Field Lighting
Haddonfield Memorial High School
Block 13, Lot 25
401 Kings Highway East
Haddonfield, NJ

U.E. Reference No.: 5499-20340-1
W.O. #: 25-9437

Sir/Madame:

Underwood Engineering Company has been retained by Haddonfield Board of Education to perform a soil investigation, analysis and to make recommendations for the most suitable foundation systems for the above referenced project. Presented herewith is the required information.

We appreciate the opportunity of working with you on this project. If we may be of further assistance, please do not hesitate to contact our office.

Respectfully submitted,
Underwood Engineering Company

Christopher T. Koss, P.E.

STATE OF NEW JERSEY
CHRISTOPHER T. KOSS
No. 24GE05257900
LICENSED
PROFESSIONAL ENGINEER

Table of Contents

I SITE DESCRIPTION 1
A. Location 1
B. Surface Conditions 1
C. Site Plan 1
II PROJECT DESCRIPTION 1
A. Type of Structure 1
B. Loads & Spacings 2
C. Finished Floor Elevations 2
III FIELD INVESTIGATION & SUBSURFACE CONDITIONS 2
A. Field Investigation 2
1) Borings 2
2) Water Table 3
IV RECOMMENDATIONS 3
A. Earthwork 3
1) Existing Topsoil & Deleterious Materials 3
2) Construction Dewatering 3
3) Proofrolling & Densification 4
4) Structural Fill Placement 5
5) On Site Soils 5
6) Backfilling & Densification of Load-Bearing Fill 6
7) Compaction 6
8) Foundation Compaction 6
B. Building Foundations 6
1) Type – Conventional Spread Footings 6
2) Light Poles – Isolated Pier Footings 7
3) Elevations 8
4) Minimum Depth of Foundation 8
5) Allowable Bearing Values 8
6) Settlements 8
C. Lateral Earth Pressures 8
D. Concrete Floor Slabs 9
V INSPECTION 9
VI QUALIFICATIONS 9

Appendix A - Boring Location Plan
Appendix B - Boring Logs
Appendix C – Mechanical Sieve (Gradation) Analysis Results
Appendix D – General Soil Terms
Appendix E – Important Information about Your Geotechnical Engineering Report - ASFE

I SITE DESCRIPTION

A. Location

The building site is located at 401 Kings Highway East in the Borough of Haddonfield, Camden County, New Jersey. The subject parcel is also known as Block 13, Lot 25 on the local tax maps.

B. Surface Conditions

The proposed building area is predominantly grass-covered lawn used currently for overflow student parking. A former medical services building had recently been demolished and raised from the area of the proposed athletic field. Based on the site survey information provided, the area of the proposed athletic field is considered generally flat, with a ground surface elevation of approximately El.: 51. The area of the proposed gymnasium is considered flat to gently sloping, with ground surface elevations ranging from El.: 51 to El.: 57.

C. Site Plan

A site plan showing the proposed building location, athletic field and related site improvements was prepared by Lan Associates dated 10/8/2025 entitled "Preliminary Field & Parking Lot Concept Plan – Hopkins Parcel Athletic Facility Improvements, Haddonfield Board of Education, 401 Kings Highway East, Haddonfield, NJ 08033."

II PROJECT DESCRIPTION

A. Type of Structure

The project is to consist of the proposed construction of a 16,512 square foot multi-use gymnasium and the installation of sports lighting for the new

turf field. Framework for the proposed gymnasium structure is to be structural steel and load bearing masonry with concrete floor slabs on grade.

B. Loads & Spacings

The maximum anticipated loading conditions provided are as follows:
Max. Column: 75 kips
Max. Wall: 5 kips/lin. ft.

C. Finished Floor Elevations

Based on the site information provided to date, the proposed finished floor elevation for the gymnasium is assumed to approximate existing grade elevations.

III FIELD INVESTIGATION & SUBSURFACE CONDITIONS

A. Field Investigation

1) Borings

The field investigation consisted of seven (7) soil borings advanced to a depth of thirty (30) feet with standard penetration resistance per ASTM D-1586. Two (2) of the borings were completed in the area of the proposed athletic field and the remaining (5) borings were completed in the area of the proposed gymnasium. Continuous split spoon sampling of soil was conducted to a depth of ten (10) feet and then at five (5) foot intervals thereafter. The findings and locations are shown in Appendices A and B to include the **Boring Location Plan** and **Soil Boring Logs**.

The site soils encountered consisted generally of the following profile beneath approximately three (3) to six (6) inches of topsoil:

Zone 1 – SAND/Silt/Clay Mixtures

Stratified deposits of coarse to fine sands with little to some silt and clay and occasional gravel. Based on the standard penetration test (SPT) data recorded during drilling and sampling operations, the mixed granular soils encountered are considered loose to medium dense. All of the test borings completed were terminated in loose to medium dense soils at a depth of thirty (30) feet below the existing ground surface.

See attached Soil Boring Logs (Appendix B) for more detailed soil descriptions and profiles.

2) Water Table

The ground water table was encountered at depths of approximately fourteen (14) feet to twenty-two (22) feet below the surface as evidenced by direct observation and saturation of the soil samples.

It should be noted that the ground water data presented on the individual boring logs may not be representative of daily or seasonal variations in the ground water level.

IV RECOMMENDATIONS

A. Earthwork

1) Existing Topsoil & Deleterious Materials

All existing asphalt paving, topsoil, vegetation, demolition debris and all deleterious materials are to be removed from the proposed building areas.

2) Construction Dewatering

Based on the test boring data, contact with static groundwater during the earthwork activities, excavation for foundations, utilities etc. is not anticipated. Should trapped or perched groundwater water be encountered, the dewatering specifications should be of a type capable

of maintaining the water table a minimum of two (2) feet below the prevailing excavation bottom during the excavations as well as during backfill operations. As stated above, groundwater and/or perched water levels encountered during construction may vary from those encountered during soil boring operations due to seasonal variations or other climatic conditions. Should water be encountered during earthwork activities, foundation excavations and utility trenches, etc, temporary dewatering may be required i.e. installation of sump pits/pumps.

3) Proofrolling & Densification

The exposed subgrades for concrete slabs on grade are to be proofrolled with a vibratory compactor in the presence of the soil engineer to detect and repair any unsuitable soil conditions and to attain a uniform firm subgrade throughout. Any loose soils encountered may be densified by proofrolling and further compaction by additional passes if necessary. This is extremely important due to areas of loose soils encountered in the soil borings.

Prior to placement of structural fills, building pad area subgrades are to be densified utilizing a 20-ton equivalent vibratory compactor. A minimum of six (6) passes over the building subgrade areas is recommended.

It is anticipated that once the site is stripped of vegetation, asphalt, and over excavation of loose soils, the prevailing subgrade soils may require scarification / aeration to allow the soils to dry to within optimum moisture content ranges so that proper compaction of the soils can be achieved. This will need to be performed only during dry weather conditions. Operation of heavy equipment on the site during wet conditions could result in excessive rutting.

Over excavation and replacement of soils may be required if the soils cannot be properly compacted in a suitable time frame.

4) Structural Fill Placement

Bring existing grade up to the desired elevation with a granular type soil that complies with the following specifications or soils which are reviewed and approved by the soil engineer and compact it to within the specifications listed under **Compaction**, unless approved by the Soils Engineer

SIEVE SIZE	Percent by Weight Passing Square Mesh Sieve
2”	100
3/4”	70-100
#4	30-80
#50	10-35
#200	5-12

It is strongly recommended that bulk samples of material to be used as load bearing structural fill be taken and tested prior to the commencement of work so that moisture / density relationships (compaction) can be determined.

5) On Site Soils

On site granular soils, as approved by the Soil Engineer, are suitable for use, as load-bearing fill but will require strict moisture control due to the presence of fine grain material (i.e. silt and clay). If on site soils are used as structural fill, they must be placed under favorable weather conditions for the soils to dry within optimum moisture content ranges. This is extremely important in order to properly compact the soils as specified herein. If inclement weather is a factor, the onsite soils may be unsuitable and provisions should be taken to import suitable structural fill materials and / or the use of moisture reducing applications.

6) Backfilling & Densification of Load-Bearing Fill

Building subgrades may be brought up to desired elevation with approved on-site soils or imported structural fill in lifts no greater than ten (10) inches loose thickness and compacted to 95% of the materials maximum dry density per ASTM D-698 as illustrated below. Materials compacted by hand operated equipment shall be placed in lifts no greater than four (4) inches loose thickness.

7) Compaction

All backfill and fill materials should be compacted to the degree noted in the following table in accordance with ASTM D-698 latest standard.

Building Area	% Maximum Dry Density (ASTM D-698)
Supporting Foundations	95%
Supporting Floor Slabs	95%
Pavements	95%
Site (Non Load Bearing)	90%

8) Foundation Compaction

All exposed footing subgrades are to be compacted by two (2) passes with a jumping jack compactor immediately prior to the placement of the footing concrete.

B. Building Foundations

1) Type – Conventional Spread Footings

The proposed gymnasium structure is to be placed on a spread footing foundation system. Due to the loose soil conditions encountered during the subsurface investigation, ground improvement will be required to safely support the proposed structure and concrete floor slabs

on grade. Soils in the area of the proposed structure are to be improved as follows:

a) Ground Improvement - Soil Removal & Replacement

Remove two (2) feet to five (5) feet of the loose soils beneath the slab-on-grade subgrade foundation areas to a width of five (5) feet beyond the building lines to stable natural ground. Deeper excavations may be required where fill is encountered in areas other than those identified during the initial subsurface investigation.

Scarify the exposed subgrade allowing the soils to dry to within optimum moisture content ranges.

Spread / aerate the over excavated soils across the site allowing the soils to dry out to within optimum moisture content ranges.

Densify the exposed subgrade with a minimum of six (6) passes with a twenty (20) ton equivalent vibratory compactor to 95 % of the materials maximum dry density per ASTM D-689.

Backfill and densify approved structural fill **(over excavated loose granular soils or imported structural fill)** to 95 % the materials maximum dry density in accordance with recommendations listed under **Compaction.**

Backfill materials are to be brought up to design subgrade in lifts no greater than ten (10) inches loose thickness as detailed above.

2) Light Poles – Isolated Pier Footings

It is anticipated that the selected sports lighting is to be supported by isolated pier footings (poured in place concrete or as recommended by the lighting system manufacturer).

3) Elevations

The footings may be placed at any elevation provided the minimum depth criteria are met and the recommendations listed herein are performed.

4) Minimum Depth of Foundation

All footing bottoms are to be founded at least three (3) feet beneath or away from atmospherically exposed final soil subgrade.

5) Allowable Bearing Values

The spread footing foundations for the gymnasium may be designed for a maximum allowable bearing capacity of 2,000 Pounds per Square Foot provided that the requirements under **Earthwork** are adhered to strictly.

Circular isolated concrete pier foundation systems for light pole installations are to be designed for a maximum allowable bearing capacity of 2,000 Pounds per Square Foot (psf) and maximum allowable lateral bearing capacity of 150 Pounds per Square Foot per Foot (psf/f).

6) Settlements

Using the allowable bearing value and following the recommendations under **Earthwork** will keep total and differential settlements negligible.

C. Lateral Earth Pressures

The following values may be used for calculating lateral earth pressures:

Active Earth Pressure Coefficient, $K_A = 0.32$

At Rest Earth Pressure Coefficient, $K_R = 0.40$

Passive Earth Pressure Coefficient, $K_P = 4.00$

Unit Weight of Soil, $\gamma = 120$ lbs. / ft^3

The above values assume a porous, free draining backfill soil.

D. Concrete Floor Slabs

Concrete floor slabs may be placed on grade provided they are underlain by a minimum of four (4) inches of porous material and all soft areas are to be removed and repaired as recommended under **Earthwork**.

V INSPECTION

It is imperative that all earthwork operations be inspected full time by a qualified representative of the Soil Engineer, especially the proofrolling operations and all footing subgrades immediately prior to placing the footing concrete. Foundation excavation evaluations should be performed to confirm that the design allowable bearing pressure is available. Footing subgrade evaluations should be performed through a combination of visual observation and hand rod probing in conjunction with comparison to the test borings. Concrete placement should be performed immediately after footing subgrade evaluations are made to prevent exposure and potential weakening of foundation subgrades.

VI QUALIFICATIONS

Our recommendations are based on the subsurface conditions as revealed by the test borings, and on the assumptions outlined in the Project Description and Site Description sections of this report.

Our recommendations are also based on the assumption that the provisions for strict field inspection will be followed as outlined.

This report does not reflect any variations which may be encountered during construction.

We should be informed immediately of such conditions so that we may modify our conclusions and recommendations, if necessary.

Underwood Engineering Company will not be responsible for variations in subsurface soils encountered in areas other than those tested.

Respectfully submitted,
Underwood Engineering Company

Christopher T. Koss, P.E.

Appendix A
Boring Location Plan

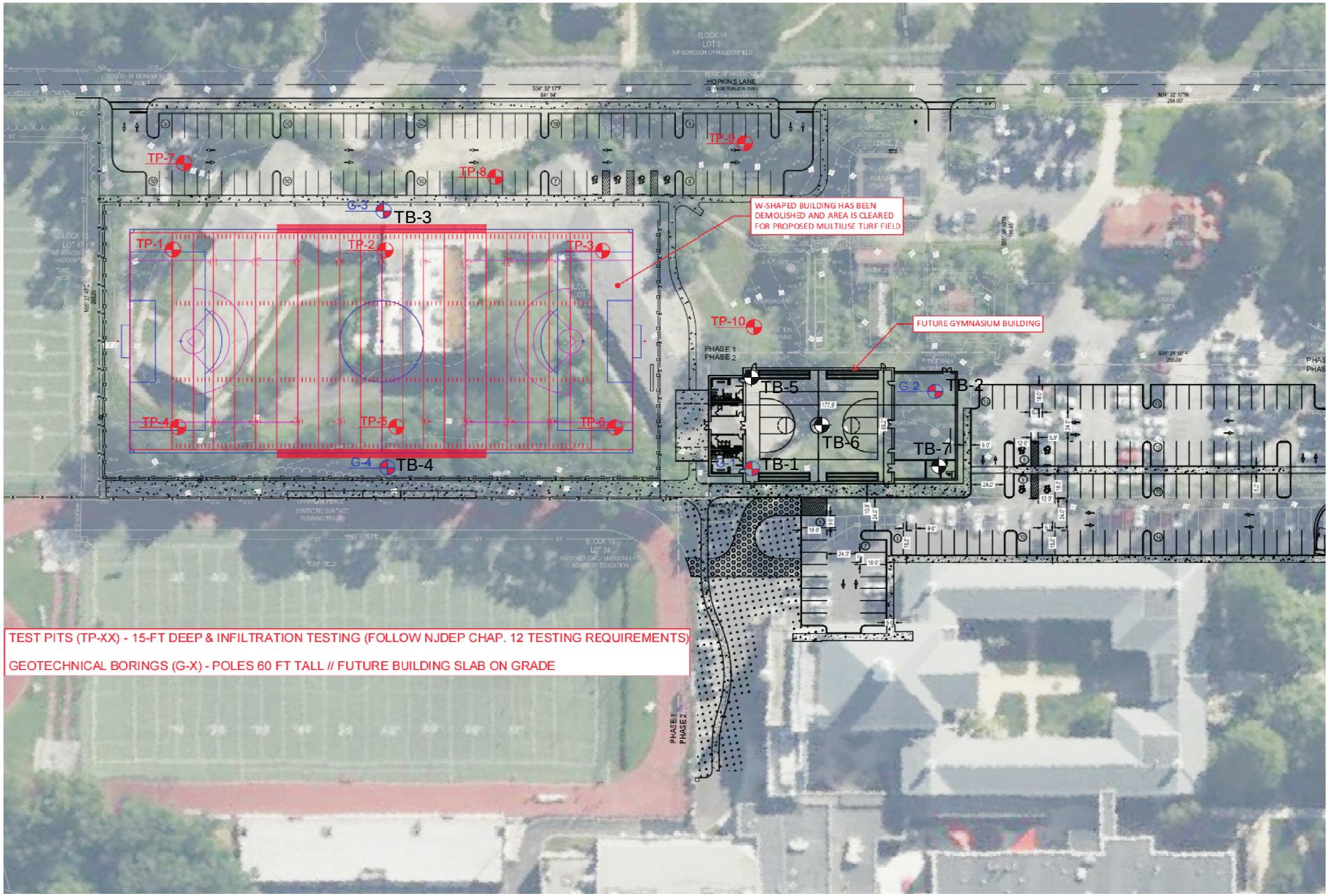

Test Boring Location G-x

Haddonfield Board of Education		Boring Location Plan			PROPOSED GYM, TURF FIELD & IMPROVEMENTS HADDONFIELD MEMORIAL HIGH SCHOOL BLOCK 13, LOT 25 401 KINGS HIGHWAY EAST BOROUGH OF HADDONFIELD, NJ
Underwood Engineering Company	Scale: N.T.S.	Date: Jan. 12, 2026	UE Ref. No.: 5499-20340-1	D - 1	

Appendix B
Boring Logs

CLIENT: Haddonfield Board of Education c/o Lan Associates

PROJECT: Hopkins Parcel Athletic Facility Improvements

401 Kings Highway East

Haddonfield, NJ 08033

DATE: 1/6/2026

BORING No.: TB-1

UNDERWOOD ENGINEERING COMPANY

1 Keystone Avenue, Suite 300, Cherry Hill, NJ 08003

Ph.# 856.933.1818

Patrick Underwood, President

GROUND SURFACE ELEVATION: NA

GROUNDWATER DATA	
DEPTH	Hours After Completion
NA	No Groundwater Encountered

METHOD OF ADVANCING BORING	DEPTH (FT.)
CONTINUOUS SPLIT SPOON SAMPLE	0 to 10 ft
AUGERS	10 to 28 ft
2" O.D. SPLIT SPOON	28 to 30 ft

Depth (ft)	Groundwater	Sampling Interval	Sample #	Blows	N-Values	Lithology	Soil Description*	Notes:
0							Topsoil: TOPSOIL 6"	
			S-1	2-2-4-4			Sand: Dark Yellowish Brown c.f. SAND (l) Silt (tr) Clay	
			S-2	2-3-3-3			Sand: Dark Yellowish Brown c.f. SAND (s) Silt	
5			S-3	3-2-3-2			Sand: Dark Yellowish Brown c.f. SAND (s) Silt (tr) Clay	
			S-4	4-3-4-4			Sand: Dark Yellowish Brown c.f. SAND (s) Silt	
10			S-5	4-6-9-11			Sand: Yellowish Brown c.f. SAND (l) Silt	
							Sand: Dark Brown c.f. SAND (s) Silt	
15			S-6	2-2-3-3			Sand: Strong Brown m.f. SAND (s) Silt	
							Sand: Very Dark Gray m.f. SAND (s-a) Clay (tr) Silt	
20			S-7	4-5-6-7				
							Sand: Very Dark Gray m.f. SAND (s) Clay (l) Silt	
25			S-8	3-4-5-5				
30			S-9	2-2-4-5				

*FIELD CLASSIFICATION ONLY. SOIL CLASSIFICATION FOR PARTICULAR USES SHOULD BE ASCERTAINED BY LABORATORY TESTS.

N - STANDARD PENETRATION RESISTANCE PER 12" (140 lb. HAMMER, 30" DROP)

CLIENT: Haddonfield Board of Education c/o Lan Associates

PROJECT: Hopkins Parcel Athletic Facility Improvements

401 Kings Highway East

Haddonfield, NJ 08033

DATE: 1/5/2026

BORING No.: TB-2

UNDERWOOD ENGINEERING COMPANY

1 Keystone Avenue, Suite 300, Cherry Hill, NJ 08003

Ph.# 856.933.1818

Patrick Underwood, President

GROUND SURFACE ELEVATION: NA

GROUNDWATER DATA	
DEPTH	Hours After Completion
NA	No Groundwater Encountered

METHOD OF ADVANCING BORING	DEPTH (FT.)
CONTINUOUS SPLIT SPOON SAMPLE	0 to 10 ft
AUGERS	10 to 28 ft
2" O.D. SPLIT SPOON	28 to 30 ft

Depth (ft)	Groundwater	Sampling Interval	Sample #	Blows	N-Values	Lithology	Soil Description*	Notes:
0							Topsoil: TOPSOIL 6"	
			S-1	4-4-4-3			Sand: Dark Olive Brown c.f. SAND (s) Silt (l) m.f. Gravel	
			S-2	3-2-3-4				
5			S-3	3-3-3-5			Sand: Dark Olive Brown c.f. SAND (l) Clay (tr) Silt	
			S-4	4-5-5-6			Sand: Dark Olive Brown c.f. SAND (s) Silt	
10			S-5	7-6-6-8			Sand: Strong Brown c.f. SAND (l) Silt	
							Sand: Strong Brown c.f. SAND (s) Silt	
15			S-6	4-7-6-4			Sand: Dark Reddish Brown c.f. SAND (s) Silt (tr) m.f. Gravel	
20			S-7	4-6-6-8			Sand: Dark Reddish Brown m.f. SAND (s) Silt (tr) Clay	
25			S-8	3-4-7-7			Sand: Very Dark Gray m.f. SAND (s) Silt (tr) Clay	
30			S-9	3-3-5-6				

*FIELD CLASSIFICATION ONLY. SOIL CLASSIFICATION FOR PARTICULAR USES SHOULD BE ASCERTAINED BY LABORATORY TESTS.

N - STANDARD PENETRATION RESISTANCE PER 12" (140 lb. HAMMER, 30" DROP)

CLIENT: Haddonfield Board of Education c/o Lan Associates

PROJECT: Hopkins Parcel Athletic Facility Improvements

401 Kings Highway East

Haddonfield, NJ 08033

DATE: 1/5/2026

BORING No.: TB-3

UNDERWOOD ENGINEERING COMPANY

1 Keystone Avenue, Suite 300, Cherry Hill, NJ 08003

Ph.# 856.933.1818

Patrick Underwood, President

GROUND SURFACE ELEVATION: NA

GROUNDWATER DATA	
DEPTH	Hours After Completion
22 ft	Sample Saturated with Water

METHOD OF ADVANCING BORING	DEPTH (FT.)
CONTINUOUS SPLIT SPOON SAMPLE	0 to 10 ft
AUGERS	10 to 28 ft
2" O.D. SPLIT SPOON	28 to 30 ft

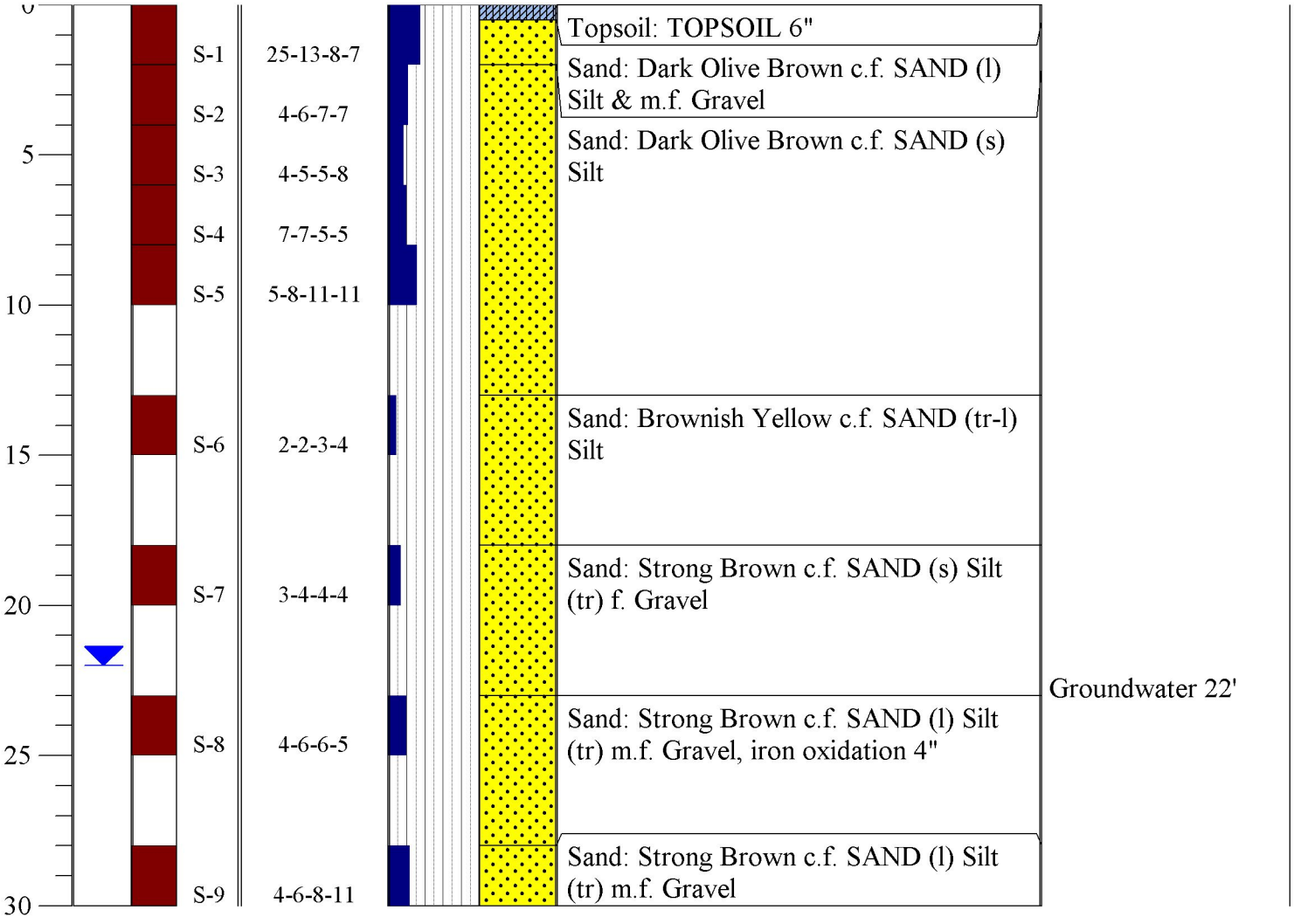

*FIELD CLASSIFICATION ONLY. SOIL CLASSIFICATION FOR PARTICULAR USES SHOULD BE ASCERTAINED BY LABORATORY TESTS.

N - STANDARD PENETRATION RESISTANCE PER 12" (140 lb. HAMMER, 30" DROP)

CLIENT: Haddonfield Board of Education c/o Lan Associates

PROJECT: Hopkins Parcel Athletic Facility Improvements

401 Kings Highway East

Haddonfield, NJ 08033

DATE: 1/5/2026

BORING No.: TB-4

UNDERWOOD ENGINEERING COMPANY

1 Keystone Avenue, Suite 300, Cherry Hill, NJ 08003

Ph.# 856.933.1818

Patrick Underwood, President

GROUND SURFACE ELEVATION: NA

GROUNDWATER DATA	
DEPTH	Hours After Completion
22 ft	Sample Saturated with Water

METHOD OF ADVANCING BORING	DEPTH (FT.)
CONTINUOUS SPLIT SPOON SAMPLE	0 to 10 ft
AUGERS	10 to 28 ft
2" O.D. SPLIT SPOON	28 to 30 ft

Depth (ft)	Groundwater	Sampling Interval	Sample #	Blows	N-Values	Lithology	Soil Description*	Notes:
0							Topsoil: TOPSOIL 6"	
			S-1	5-5-4-4			Sand: Dark Olive Brown c.f. SAND (l) Clay (tr) Silt	
			S-2	6-7-8-7			Sand: Dark Olive Brown c.f. SAND (s) Silt	
5			S-3	4-4-4-4			Sand: Dark Olive Brown m.f. SAND (s) Silt	
			S-4	2-3-6-8			Sand: Yellowish Brown c.f. SAND (l) Silt	
10			S-5	7-8-7-6			Sand: Dark Olive Brown c.f. SAND (s) Silt & m.f. Gravel	
			S-6	3-4-5-5			Sand: Dark Reddish Brown c.f. SAND (a) m.f. Gravel (s) Silt	
15							Sand: Dark Reddish Brown c.f. SAND (s) Silt	
			S-7	6-10-8-9			Sand: Dark Reddish Brown c.f. SAND (s) Silt (l) f. Gravel	ESHWT 19'
20								Groundwater 22'
			S-8	3-6-7-9			Sand: Dark Reddish Brown c.f. SAND (s) Silt (l) m.f. Gravel	
25								
			S-9	3-4-9-10			Sand: Reddish Brown m.f. SAND (s) Silt, iron oxidation	
30								

*FIELD CLASSIFICATION ONLY. SOIL CLASSIFICATION FOR PARTICULAR USES SHOULD BE ASCERTAINED BY LABORATORY TESTS.

N - STANDARD PENETRATION RESISTANCE PER 12" (140 lb. HAMMER, 30" DROP)

CLIENT: Haddonfield Board of Education c/o Lan Associates

PROJECT: Hopkins Parcel Athletic Facility Improvements

401 Kings Highway East

Haddonfield, NJ 08033

DATE: 1/6/2026

BORING No.: TB-5

UNDERWOOD ENGINEERING COMPANY

1 Keystone Avenue, Suite 300, Cherry Hill, NJ 08003

Ph.# 856.933.1818

Patrick Underwood, President

GROUND SURFACE ELEVATION: NA

GROUNDWATER DATA	
DEPTH	Hours After Completion
NA	No Groundwater Encountered

METHOD OF ADVANCING BORING	DEPTH (FT.)
CONTINUOUS SPLIT SPOON SAMPLE	0 to 10 ft
AUGERS	10 to 28 ft
2" O.D. SPLIT SPOON	28 to 30 ft

Depth (ft)	Groundwater	Sampling Interval	Sample #	Blows	N-Values	Lithology	Soil Description*	Notes:
0							Topsoil: TOPSOIL 6"	
			S-1	10-6-6-6			Sand: Dark Olive Brown c.f. SAND (s) Silt (tr) f. Gravel	
			S-2	3-3-3-4			Sand: Olive Brown m.f. SAND (s) Silt (tr) Clay	
5			S-3	4-5-4-5			Sand: Olive Brown m.f. SAND (s) Silt	
			S-4	6-6-4-3				
10			S-5	4-4-4-7			Sand: Dark Brown c.f. SAND (l) Silt	
15			S-6	6-7-7-7			Sand: Reddish Brown to Brown c.f. SAND (s) Silt (tr) f. Gravel	
20			S-7	5-6-6-7			Sand: Brown c.f. SAND (tr) Silt, iron oxidation	
25			S-8	6-6-8-9			Sand: Strong Brown to Reddish Brown m.f. SAND (s) Silt (l) Clay	
30			S-9	4-4-5-5			Sand: Very Dark Gray m.f. SAND (s) Silt (tr) Clay	

*FIELD CLASSIFICATION ONLY. SOIL CLASSIFICATION FOR PARTICULAR USES SHOULD BE ASCERTAINED BY LABORATORY TESTS.

N - STANDARD PENETRATION RESISTANCE PER 12" (140 lb. HAMMER, 30" DROP)

CLIENT: Haddonfield Board of Education c/o Lan Associates

PROJECT: Hopkins Parcel Athletic Facility Improvements

401 Kings Highway East

Haddonfield, NJ 08033

DATE: 1/6/2026

BORING No.: TB-6

UNDERWOOD ENGINEERING COMPANY

1 Keystone Avenue, Suite 300, Cherry Hill, NJ 08003

Ph.# 856.933.1818

Patrick Underwood, President

GROUND SURFACE ELEVATION: NA

GROUNDWATER DATA	
DEPTH	Hours After Completion
NA	No Groundwater Encountered

METHOD OF ADVANCING BORING	DEPTH (FT.)
CONTINUOUS SPLIT SPOON SAMPLE	0 to 10 ft
AUGERS	10 to 28 ft
2" O.D. SPLIT SPOON	28 to 30 ft

Depth (ft)	Groundwater	Sampling Interval	Sample #	Blows	N-Values	Lithology	Soil Description*	Notes:
0							Topsoil: TOPSOIL 6"	
			S-1	1-3-5-5			Sand: Dark Olive Brown c.f. SAND (s) Silt	
			S-2	3-3-4-3			Sand: Dark Brown c.f. SAND (s) Silt	
5			S-3	2-3-3-3				
			S-4	4-5-4-4			Sand: Dark Yellowish Brown c.f. SAND (s) Silt (l) Clay	
10			S-5	6-10-9-14			Sand: Wet, Brown c.f. SAND (s) Silt	
15			S-6	2-2-2-3				Perched Water 14.5'
20			S-7	3-4-5-5			Sand: Very Dark Gray m.f. SAND (s-a) Clay (tr) Silt	
25			S-8	3-4-5-5			Sand: Very Dark Gray m.f. SAND (s) Clay (l) Silt	
30			S-9	5-8-11-11				

*FIELD CLASSIFICATION ONLY. SOIL CLASSIFICATION FOR PARTICULAR USES SHOULD BE ASCERTAINED BY LABORATORY TESTS.

N - STANDARD PENETRATION RESISTANCE PER 12" (140 lb. HAMMER, 30" DROP)

CLIENT: Haddonfield Board of Education c/o Lan Associates

PROJECT: Hopkins Parcel Athletic Facility Improvements

401 Kings Highway East

Haddonfield, NJ 08033

DATE: 1/6/2026

BORING No.: TB-7

UNDERWOOD ENGINEERING COMPANY

1 Keystone Avenue, Suite 300, Cherry Hill, NJ 08003

Ph.# 856.933.1818

Patrick Underwood, President

GROUND SURFACE ELEVATION: NA

GROUNDWATER DATA	
DEPTH	Hours After Completion
NA	No Groundwater Encountered

METHOD OF ADVANCING BORING	DEPTH (FT.)
CONTINUOUS SPLIT SPOON SAMPLE	0 to 10 ft
AUGERS	10 to 28 ft
2" O.D. SPLIT SPOON	28 to 30 ft

Depth (ft)	Groundwater	Sampling Interval	Sample #	Blows	N-Values	Lithology	Soil Description*	Notes:
0							Topsoil: TOPSOIL 3"	
			S-1	0-2-2-2			Sand: Dark Gray to Dark Olive c.f. SAND (s) Silt, Roots	
			S-2	0-2-2-3			Sand: Dark Yellowish Brown c.f. SAND (s) Silt	
5			S-3	3-3-4-4			Sand: Dark Olive Brown c.f. SAND (s) Silt	
			S-4	4-4-5-8			Sand: Reddish Brown c.m. SAND (l) Silt (tr-l) f. Gravel, iron oxidation	
10			S-5	7-9-10-13			Sand: Yellowish Brown m.f. SAND (l) Silt (tr) f. Gravel	
15			S-6	2-2-3-4			Sand: Very Dark Gray m.f. SAND (s) Clay (l) Silt	
20			S-7	3-2-3-4				
25			S-8	2-3-4-6				
30			S-9	5-6-8-13			Sand: Very Dark Gray m.f. SAND (s) Silt (tr) Shell fragments	

*FIELD CLASSIFICATION ONLY. SOIL CLASSIFICATION FOR PARTICULAR USES SHOULD BE ASCERTAINED BY LABORATORY TESTS.

N - STANDARD PENETRATION RESISTANCE PER 12" (140 lb. HAMMER, 30" DROP)

Appendix C
Mechanical Sieve (Gradation) Analysis Results

Underwood Engineering, Inc.
1 Keystone Ave, Suite 300
Cherry Hill, New Jersey 08003
(856) 933-1818
Mailing: PO Box 3520, Cherry Hill, NJ 08034

Material Test Report

Report No: MAT:26-0178-S01
Issue No: 1

Client: Haddonfield Board of Education **CC:**

Project: Hopkins Parcel Athletic Facility Improvements
401 Kings Highway East, Haddonfield, NJ 08033

This report is based on the visual and physical inspection described below. The inspections, laboratory tests and subsequent results are based on a representative sample of the overall project. Inspection by Underwood Engineering, Inc. in no way releases the contractor or sub-contractor of full responsibility of meeting contract documents, plans, specifications, shop drawings and standard in the industry . No other warranty is expressed or implied. No conclusions should be drawn from this report other than those specifically stated.

AASHTO ACCREDITED

Submitted By: Caitlynn M. Brevik
Date of Issue: 1/9/2026

Sample Details

Sample ID	26-0178-S01
Date Sampled	1/8/2026
Source	Soil Boring
Material	m.f. SAND, (tr) Silt & Clay
Specification	I-5 plus No. 100 Sieve
Location	TB-1 at 8ft to 10ft

Other Test Results

Description	Method	Result	Limits
Water Content (%)	ASTM D 2216	4.4	
Method		B	
Tested By		Caitlynn M. Brevik	
Date Tested		1/8/2026	

Particle Size Distribution

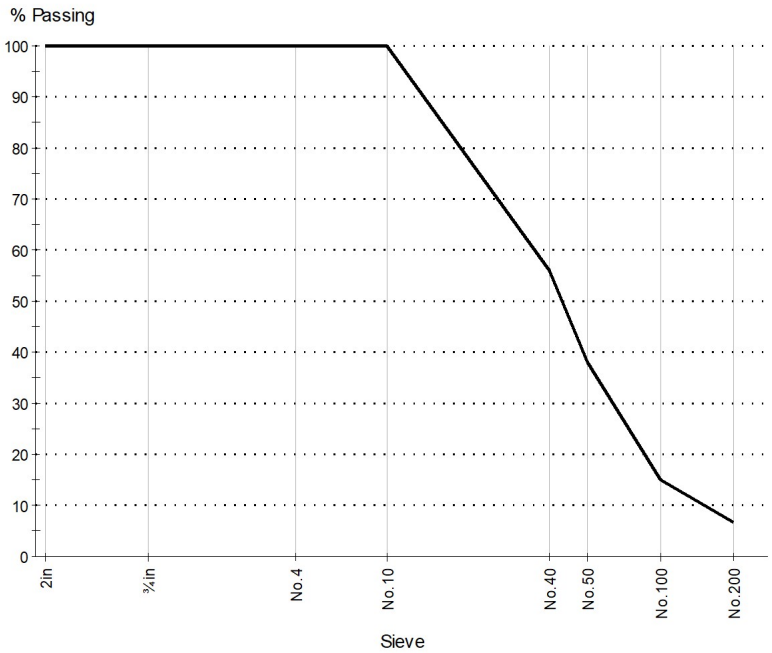

Method: AASHTO T 27, AASHTO T 11

Date Tested: 1/8/2026
Tested By: Caitlynn M. Brevik

Sieve Size	% Passing	Limits
2in	100	
¾in	100	
No.4	100	
No.10	100	
No.40	56	
No.50	38	
No.100	15	
No.200	6.8	

Comments

m.f. SAND, (tr) Silt & Clay

© 2000-2026 QESTLab by SpectraQEST.com

Underwood Engineering, Inc.
1 Keystone Ave, Suite 300
Cherry Hill, New Jersey 08003
(856) 933-1818
Mailing: PO Box 3520, Cherry Hill, NJ 08034

Material Test Report

Report No: MAT:26-0178-S02
Issue No: 1

Client: Haddonfield Board of Education **CC:**

Project: Hopkins Parcel Athletic Facility Improvements
401 Kings Highway East, Haddonfield, NJ 08033

This report is based on the visual and physical inspection described below. The inspections, laboratory tests and subsequent results are based on a representative sample of the overall project. Inspection by Underwood Engineering, Inc. in no way releases the contractor or sub-contractor of full responsibility of meeting contract documents, plans, specifications, shop drawings and standard in the industry . No other warranty is expressed or implied. No conclusions should be drawn from this report other than those specifically stated.

AASHTO ACCREDITED

Submitted By: Caitlynn M. Brevik
Date of Issue: 1/9/2026

Sample Details

Sample ID	26-0178-S02
Date Sampled	1/8/2026
Source	Soil Boring
Material	c.f. SAND, (s) Silt and Clay
Specification	I-5 plus No. 100 Sieve
Location	TB-2 at 18ft to 20ft

Other Test Results

Description	Method	Result	Limits
Water Content (%)	ASTM D 2216	22.6	
Method		B	
Tested By		Caitlynn M. Brevik	
Date Tested		1/8/2026	

Particle Size Distribution

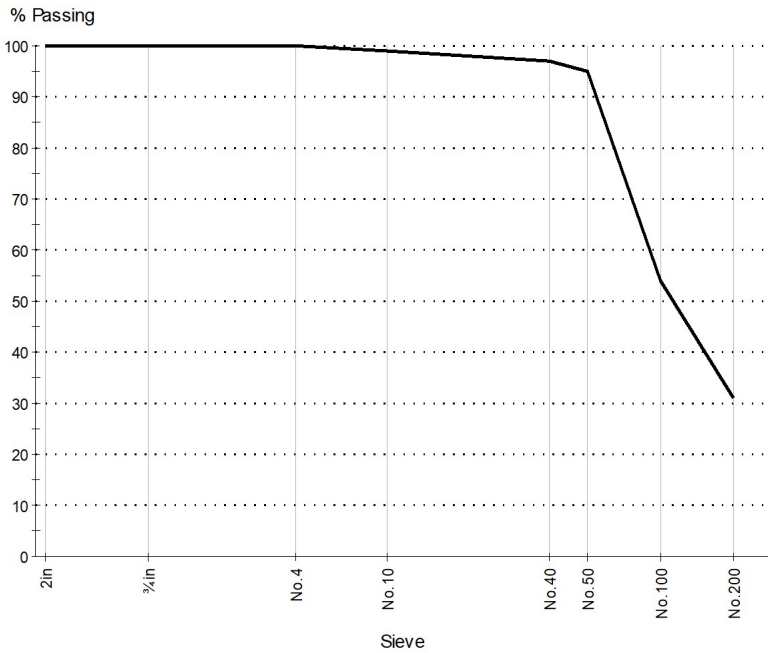

Method: AASHTO T 27, AASHTO T 11

Date Tested: 1/8/2026
Tested By: Caitlynn M. Brevik

Sieve Size	% Passing	Limits
2in	100	
¾in	100	
No.4	100	
No.10	99	
No.40	97	
No.50	95	
No.100	54	
No.200	31	

Comments

c.f. SAND, (s) Silt and Clay

© 2000-2026 QESTLab by SpectraQEST.com

Underwood Engineering, Inc.
1 Keystone Ave, Suite 300
Cherry Hill, New Jersey 08003
(856) 933-1818
Mailing: PO Box 3520, Cherry Hill, NJ 08034

Material Test Report

Report No: MAT:26-0178-S03
Issue No: 1

Client: Haddonfield Board of Education **CC:**

Project: Hopkins Parcel Athletic Facility Improvements
401 Kings Highway East, Haddonfield, NJ 08033

This report is based on the visual and physical inspection described below. The inspections, laboratory tests and subsequent results are based on a representative sample of the overall project. Inspection by Underwood Engineering, Inc. in no way releases the contractor or sub-contractor of full responsibility of meeting contract documents, plans, specifications, shop drawings and standard in the industry . No other warranty is expressed or implied. No conclusions should be drawn from this report other than those specifically stated.

AASHTO ACCREDITED

Submitted By: Caitlynn M. Brevik
Date of Issue: 1/9/2026

Sample Details

Sample ID	26-0178-S03
Date Sampled	1/8/2026
Source	Soil Boring
Material	c.f. SAND, (tr) Silt & Clay
Specification	I-5 plus No. 100 Sieve
Location	TB-3 at 13ft to 15ft

Other Test Results

Description	Method	Result	Limits
Water Content (%)	ASTM D 2216	7.8	
Method		B	
Tested By		Caitlynn M. Brevik	
Date Tested		1/8/2026	

Particle Size Distribution

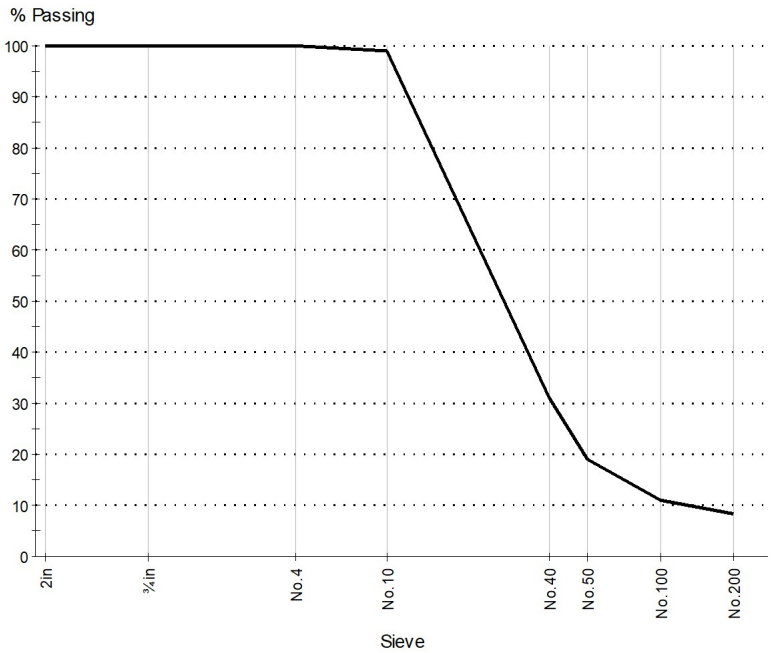

Method: AASHTO T 27, AASHTO T 11

Date Tested: 1/8/2026
Tested By: Caitlynn M. Brevik

Sieve Size	% Passing	Limits
2in	100	
¾in	100	
No.4	100	
No.10	99	
No.40	31	
No.50	19	
No.100	11	
No.200	8.3	

Comments

c.f. SAND, (tr) Silt & Clay

© 2000-2026 QESTLab by SpectraQEST.com

Underwood Engineering, Inc.
1 Keystone Ave, Suite 300
Cherry Hill, New Jersey 08003
(856) 933-1818
Mailing: PO Box 3520, Cherry Hill, NJ 08034

Material Test Report

Report No: MAT:26-0178-S04
Issue No: 1

Client: Haddonfield Board of Education **CC:**

Project: Hopkins Parcel Athletic Facility Improvements
401 Kings Highway East, Haddonfield, NJ 08033

This report is based on the visual and physical inspection described below. The inspections, laboratory tests and subsequent results are based on a representative sample of the overall project. Inspection by Underwood Engineering, Inc. in no way releases the contractor or sub-contractor of full responsibility of meeting contract documents, plans, specifications, shop drawings and standard in the industry . No other warranty is expressed or implied. No conclusions should be drawn from this report other than those specifically stated.

AASHTO ACCREDITED

Submitted By: Caitlynn M. Brevik
Date of Issue: 1/9/2026

Sample Details

Sample ID	26-0178-S04
Date Sampled	1/8/2026
Source	Soil Boring
Material	m.f. SAND, (a) Silt & Clay
Specification	I-5 plus No. 100 Sieve
Location	TB-4 at 4ft to 6ft

Other Test Results

Description	Method	Result	Limits
Water Content (%)	ASTM D 2216	18.0	
Method		B	
Tested By		Caitlynn M. Brevik	
Date Tested		1/8/2026	

Particle Size Distribution

Method: AASHTO T 27, AASHTO T 11

Date Tested: 1/8/2026
Tested By: Caitlynn M. Brevik

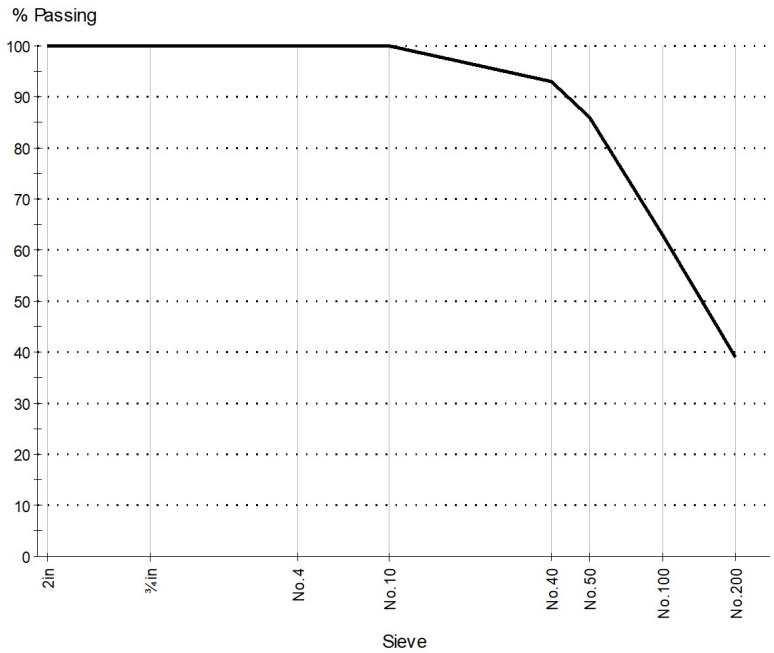

Sieve Size	% Passing	Limits
2in	100	
¾in	100	
No.4	100	
No.10	100	
No.40	93	
No.50	86	
No.100	63	
No.200	39	

Comments

m.f. SAND, (a) Silt & Clay

© 2000-2026 QESTLab by SpectraQEST.com

Underwood Engineering, Inc.
1 Keystone Ave, Suite 300
Cherry Hill, New Jersey 08003
(856) 933-1818
Mailing: PO Box 3520, Cherry Hill, NJ 08034

Material Test Report

Report No: MAT:26-0178-S05
Issue No: 1

Client: Haddonfield Board of Education **CC:**

Project: Hopkins Parcel Athletic Facility Improvements
401 Kings Highway East, Haddonfield, NJ 08033

This report is based on the visual and physical inspection described below. The inspections, laboratory tests and subsequent results are based on a representative sample of the overall project. Inspection by Underwood Engineering, Inc. in no way releases the contractor or sub-contractor of full responsibility of meeting contract documents, plans, specifications, shop drawings and standard in the industry . No other warranty is expressed or implied. No conclusions should be drawn from this report other than those specifically stated.

AASHTO ACCREDITED

Submitted By: Caitlynn M. Brevik
Date of Issue: 1/9/2026

Sample Details

Sample ID	26-0178-S05
Date Sampled	1/8/2026
Source	Soil Boring
Material	m.f. SAND, (a) Silt & Clay
Specification	I-5 plus No. 100 Sieve
Location	TB-5 at 2ft to 4ft

Other Test Results

Description	Method	Result	Limits
Water Content (%)	ASTM D 2216	17.6	
Method		B	
Tested By		Caitlynn M. Brevik	
Date Tested		1/8/2026	

Particle Size Distribution

Method: AASHTO T 27, AASHTO T 11

Date Tested: 1/8/2026
Tested By: Caitlynn M. Brevik

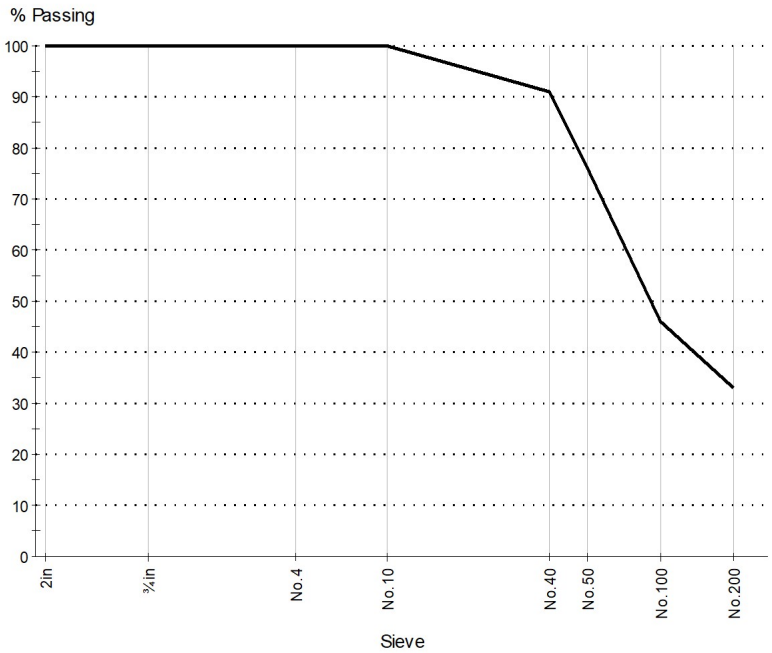

Sieve Size	% Passing	Limits
2in	100	
¾in	100	
No.4	100	
No.10	100	
No.40	91	
No.50	76	
No.100	46	
No.200	33	

Comments

m.f. SAND, (a) Silt & Clay

© 2000-2026 QESTLab by SpectraQEST.com

Underwood Engineering, Inc.
1 Keystone Ave, Suite 300
Cherry Hill, New Jersey 08003
(856) 933-1818
Mailing: PO Box 3520, Cherry Hill, NJ 08034

Material Test Report

Report No: MAT:26-0178-S06
Issue No: 1

Client: Haddonfield Board of Education **CC:**

Project: Hopkins Parcel Athletic Facility Improvements
401 Kings Highway East, Haddonfield, NJ 08033

This report is based on the visual and physical inspection described below. The inspections, laboratory tests and subsequent results are based on a representative sample of the overall project. Inspection by Underwood Engineering, Inc. in no way releases the contractor or sub-contractor of full responsibility of meeting contract documents, plans, specifications, shop drawings and standard in the industry . No other warranty is expressed or implied. No conclusions should be drawn from this report other than those specifically stated.

AASHTO ACCREDITED

Submitted By: Caitlynn M. Brevik
Date of Issue: 1/9/2026

Sample Details

Sample ID	26-0178-S06
Date Sampled	1/8/2026
Source	Soil Boring
Material	m.f. SAND, (s) Silt & Clay
Specification	I-5 plus No. 100 Sieve
Location	TB-6 at 18ft to 20ft

Other Test Results

Description	Method	Result	Limits
Water Content (%)	ASTM D 2216	28.3	
Method		B	
Tested By		Caitlynn M. Brevik	
Date Tested		1/8/2026	

Particle Size Distribution

Method: AASHTO T 27, AASHTO T 11

Date Tested: 1/8/2026
Tested By: Caitlynn M. Brevik

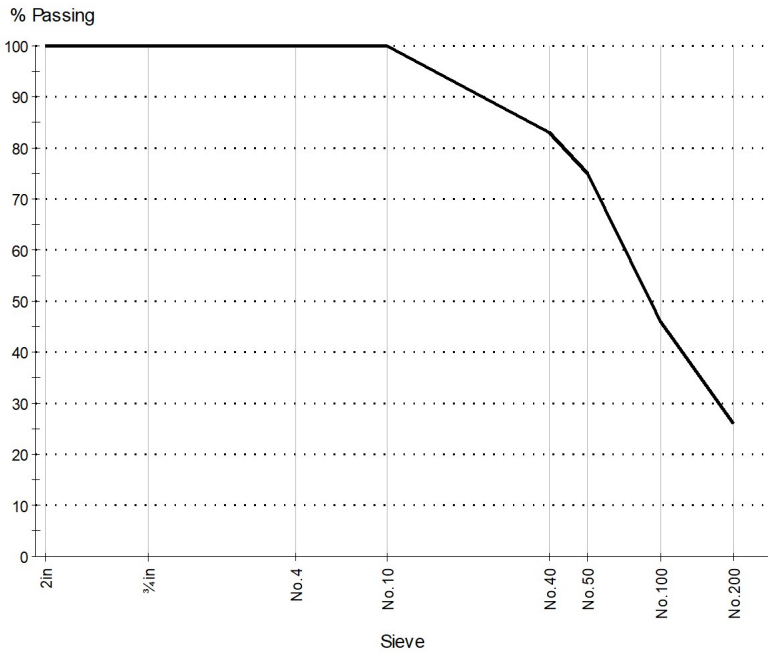

Sieve Size	% Passing	Limits
2in	100	
¾in	100	
No.4	100	
No.10	100	
No.40	83	
No.50	75	
No.100	46	
No.200	26	

Comments

m.f. SAND, (s) Silt & Clay

© 2000-2026 QESTLab by SpectraQEST.com

Underwood Engineering, Inc.
1 Keystone Ave, Suite 300
Cherry Hill, New Jersey 08003
(856) 933-1818
Mailing: PO Box 3520, Cherry Hill, NJ 08034

Material Test Report

Report No: MAT:26-0178-S07
Issue No: 1

Client: Haddonfield Board of Education **CC:**

Project: Hopkins Parcel Athletic Facility Improvements
401 Kings Highway East, Haddonfield, NJ 08033

This report is based on the visual and physical inspection described below. The inspections, laboratory tests and subsequent results are based on a representative sample of the overall project. Inspection by Underwood Engineering, Inc. in no way releases the contractor or sub-contractor of full responsibility of meeting contract documents, plans, specifications, shop drawings and standard in the industry . No other warranty is expressed or implied. No conclusions should be drawn from this report other than those specifically stated.

AASHTO ACCREDITED

Submitted By: Caitlynn M. Brevik
Date of Issue: 1/9/2026

Sample Details

Sample ID	26-0178-S07
Date Sampled	1/8/2026
Source	Soil Boring
Material	m.f. SAND, (s) Silt & Clay
Specification	I-5 plus No. 100 Sieve
Location	TB-7 at 18ft to 20ft

Other Test Results

Description	Method	Result	Limits
Water Content (%)	ASTM D 2216	27.5	
Method		B	
Tested By		Caitlynn M. Brevik	
Date Tested		1/8/2026	

Particle Size Distribution

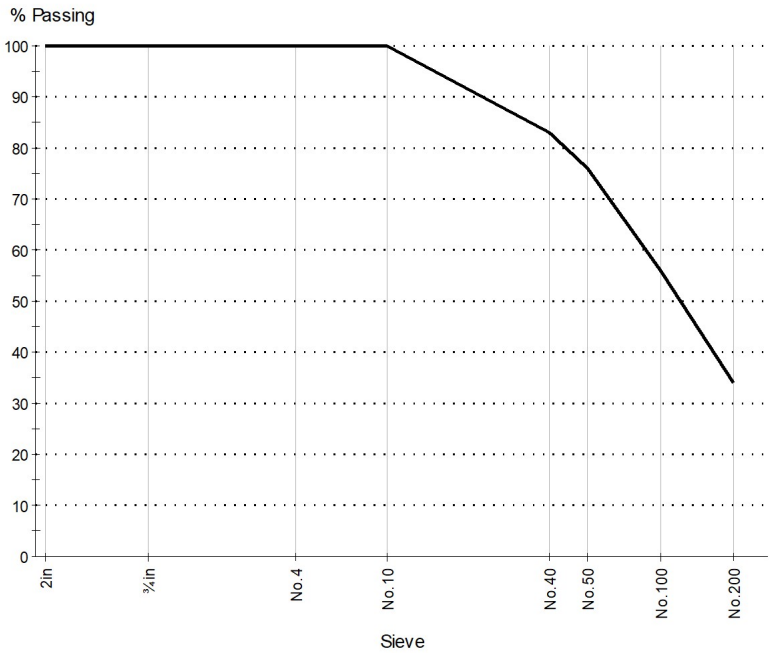

Method: AASHTO T 27, AASHTO T 11

Date Tested: 1/8/2026
Tested By: Caitlynn M. Brevik

Sieve Size	% Passing	Limits
2in	100	
¾in	100	
No.4	100	
No.10	100	
No.40	83	
No.50	76	
No.100	56	
No.200	34	

Comments

m.f. SAND, (s) Silt & Clay

© 2000-2026 QESTLab by SpectraQEST.com

Appendix D
General Soil Terms

General Soil Terms

Particle Sizes

Boulders	Greater than 2 inches (305mm)
Cobbles	3 inches (76.233) to 12 inches (305mm)
Gravel-coarse	3/4 inches (19.05mm) to 3 inches (76.2mm)
Gravel-fine	No. 4- 3/16 inches (4 75mm) to 3/4 inches (19.05mm)
Sand-coarse	No. 10 (2.00mm) to No. 4 (4 75mm)
Sand-medium	No. 40 (0.425mm) to No. 10 (2.00.)
Sand-fine	No. 200 (0.075mm) to No. 40 (0.425mm)
Silt	0.005mm to 0.074mm
Clay	Less than 0.005mm

Classifications

The major soil constituent is the principal noun, i.e. clay, silt, sand, gravel. The second major soil constituent and other minor constituents are reported as follows:

Second Major Constituent-Minor Constituents
(Percentage by weight)

Trace – 1 to 12%	Trace – 1 to 12%
Adjective – 12 to 35% (clayey, silty, etc.)	Little – 12 to 23
	Some – 23 to 33%
	And – Over 35%

Cohesive Soils

If clay content is sufficient so that clay dominates soil properties, clay becomes the principal noun with other major soil constituent as modifier: i.e. silty clay. Other minor soil constituents may be included in accordance with the classification breakdown for cohesionless soils: i.e. silty clay, trace of sand, little gravel

Consistency	Unconfined Compressive Strength (psf)	Approximate Range of (N)
Very Soft	Below 500	0-2
Soft	500-1000	3-4
Medium	1000-2000	5-8
Stiff	2000-4000	9-15
Very Stiff	4000-8000	16-30
Hard	8000-16000	31-50
Very Hard	Over 16000	Over 50

Consistency of cohesive soils is bases upon an evaluation of the observed resistance to deformation under load and not upon Standard Penetration Resistance (N)

Cohesionless Soils

Density Classification	Relative Density	Approximate Range of (N)
Very Loose	0-15	0-4
Loose	16-35	5-10
Medium Compact	36-65	11-30
Compact	66-85	31-50
Very Compact	86-100	Over 50

Relative Density of Cohesionless Soils is based upon the evaluation of the Standard Penetration Resistance (N), modified as required for depth effects, sampling effects, etc.

Standard Penetration Test (ASTM D 1586) – A 2.0” outside-diameter split barrel sampler is driven into undisturbed soil by means of a 140-pound weight falling freely through a vertical distance of 30 inches. The sampler is normally driven three successive 6-inch increments. The total number of blows required for the final 12 inches of penetration is the Standard Penetration Resistance (N).

Appendix E

Important Information About Your Geotechnical Engineering Report - ASFE

GEOTECHNICAL SERVICES ARE PERFORMED FOR SPECIFIC PURPOSES, PERSONS, AND PROJECTS

#

Geotechnical engineers structure their services to meet the specific needs of their clients. A geotechnical engineering study conducted for a civil engineer may not fulfill the needs of a construction contractor or even another civil engineer. Because each geotechnical engineering study is unique, each geotechnical engineering report is unique, prepared solely to the client. No one except you should rely on your geotechnical engineering report without first conferring with the GEOTECHNICAL engineer who prepared it. And no one-not even you should apply the report for any purpose or project except the one originally contemplated.

A GEOTECHNICAL ENGINEERING REPORT IS BASES ON A UNIQUE SET OF PROJECT-SPECIFIC FACTORS

Geotechnical engineers consider a number of unique, project-specific factors when establishing the scope of a study. Typical factors include: the client's goals, objectives, and risk management preferences: the general nature of the structure involved, its size, and configuration: the location of the structure on the site: and the other planned or existing site improvements, such as access roads, parking lots, and underground utilities. Unless the geotechnical engineer who conducted the study specifically indicates otherwise, do not rely on geotechnical engineering report that was:
*not prepared for you,
*not prepared for your project,
*not prepared for the specific site explored, or
*completed before important project changes were made

Typical changes that can erode the reliability of an existing geotechnical engineering report include those that affect:
*the function of the proposed structure, as when its changed from a parking garage to an office
building, or from a light industrial plant to a refrigerated warehouse
*elevation, configuration, location, orientation, or weight off the proposed structure,
*composition of the design team, or
*project ownership

As general rule, always inform your geotechnical engineer of project changes—even minor ones—and request an assessment of their impact. Geotechnical engineers cannot accept responsibility or liability for problems that occur because their reports do not consider developments of which they were not informed.

SUBSURFACE CONDITIONS CAN CHANGE

A geotechnical engineering report is bases on conditions that existed at the time the study was performed. Do not rely on a geotechnical engineering report whose adequacy may have been affected by: the passage of time; by man-made events, such as construction on or adjacent to the site; or by natural events, such as floods earthquakes, or groundwater fluctuations. Always contact the geotechnical engineer before applying the report to determine if it is still reliable. A minor amount of additional testing or analysis could prevent major problems.

MOST GEOTECHNICAL FINDINGS ARE PROFESSIONAL OPINIONS

Site exploration identifies subsurface conditions only at those points where subsurface tests are conducted or samples are taken. Geotechnical engineers review field and laboratory data and then apply their professional judgment to render and opinion about subsurface conditions throughout the site. Actual subsurface conditions may differ—sometimes significantly—from those indicated in your report. Retaining the geotechnical engineer who developed your report to provide construction observation is the most effective method of managing the risks associated with unanticipated conditions.

A REPORT'S RECOMMENDATIONS ARE NOT FINAL

Do not over rely on the construction recommendations included in your report. Those recommendations are not final, because geotechnical engineers develop them principally from judgment and opinion. Geotechnical engineers can finalize their recommendations only by observing actual conditions revealed during construction. The geotechnical engineer who developed your report cannot assume responsibility or liability for the report's recommendations if that engineer does not perform construction observation.

A GEOTECHNICAL ENGINEERING REPORT IS SUBJECT TO MISINTERPRETATION

Other design team members' misinterpretation of geotechnical engineering reports has resulted in costly problems. Lower that risk by having your geotechnical engineer confer with appropriate members of the design team after submitting the report. Also retain your geotechnical engineer review pertinent elements of the design team's plans and specifications. Contractors can also misinterpret a geotechnical engineering report. Reduce that risk by having your geotechnical engineer participate in prebid and preconstruction conferences, and by providing construction observation.

DO NOT REDRAW THE ENGINEERR'S LOGS

Geotechnical engineers prepare final boring and testing logs based upon their interpretation of field logs laboratory data. To prevent errors or omissions, the logs included in a geotechnical engineering report should never be redrawn for inclusion in architectural or other design drawings. Only photographic or electronic reproduction is acceptable, but recognize that separating logs from the report can elevate risk.

GIVE CONTRACTORS A COMPLETE REPORT AND GUIDANCE

#

Some owners and design professionals mistakenly believe they can make contractors liable for unanticipated subsurface conditions by limiting what they provide for bid preparation. To help prevent costly problems, give contractors the complete geotechnical engineering report, but preface it with a clearly written letter of transmittal. In that letter, advise contractors that the report was not prepared for purposes of bid development and that the report's accuracy is limited; encourage them to confer with the geotechnical engineer who prepared the report (a modest fee may be required) and/or to conduct additional study to obtain the specific types of information they need or prefer.

A prebid conference can also be valuable. Be sure contractors have sufficient time to perform additional studies. Only then might you be in a position to give contractors the best information available to you, while requiring them to at least share some of the financial responsibilities stemming from unanticipated conditions.
#

READ RESPONSIBILITY PROVISIONS CLOSELY

#

Some clients, design professionals, and contractors do no recognize that geotechnical engineering is far less exact than other engineering disciplines. This lack of understanding has created unrealistic expectations that have led to disappointments, claims, and disputes. To help reduce such risks, geotechnical engineers commonly include a variety of explanatory provisions in their reports. Sometimes labeled “limitations”, many of these provisions indicate where geotechnical engineers responsibilities begin and end, to help others recognize their own responsibilities and risks. Read these provisions closely. Ask questions. Your geotechnical engineer should respond fully and frankly.

GEOENVIRONMENTAL CONCERNS ARE NOT CONVERED

The equipment, techniques and personnel used to perform a geoenvironmental study differ significantly from those used to perform a geotechnical study. For that reason, a geotechnical engineering report does not usually relate any geoenvironmental findings, conclusions, or recommendations; e.g., about the likelihood of encountering underground storage tanks or regulated contaminants. Unanticipated environmental problems have led to numerous project failures. If you have not yet obtained your own geoenvironmental information, ask your geotechnical consultant for risk management guidance. Do not rely on an environmental report prepared for someone else.

UNDERWOOD ENGINEERING COMPANY
1 KEYSTONE AVE. SUITE 300
CHERRY HILL, NJ 08003

Patrick M Underwood, President 856-933-1818

CLIENT:	Haddonfield Board of Education, c/o LAN Associates 95 Grove Street Haddonfield, NJ 08033
PROJECT:	Hopkins Parcel Athletic Facility Improvements 401 Kings Highway East Haddonfield, NJ
REQUIREMENT:	Professional Engineering Services
LOCATION:	Locations Provided by LAN Associates
DATE:	1/22/2026
UE REF. NO.:	5499-20340-2, WO#25- 9438
ATTENTION:	Elio Qorri email: elio.qorri@lanassociates.com

PURPOSE

The purpose of this report is to present the findings of the geotechnical field and laboratory analysis compiled from the Hopkins Parcel Athletic Facility Improvement Infiltration Investigation project located at 401 Kings Highway East, in the Borough of Haddonfield, Camden County, New Jersey. All supplemental test locations were shown on the conceptual plan.

INVESTIGATION

The geotechnical investigation was requested by Haddonfield Board of Education, care of LAN Associates, to ascertain groundwater and subsurface soil data. Representatives of Underwood Engineering, Inc. were present on Wednesday, January 14th, and Thursday, January 15th, 2026, to observe and log the test pit data and perform in-situ infiltration testing.

The site consisted of an open grass-covered lot (structures were demolished prior this site investigation), with minimal trees, minimal sidewalks remaining in place, and a large multi-story Victorian building and detached garage remaining in the south-east portion of the parcel. The asphalt lot in the south-eastern portion of the parcel had been left in place at the time of the investigation. The site was bound by Hopkins Lane to the North, Haddonfield Memorial High School to the West, Hopkins Lane and Cooper River Park to the East, and Kings Highway East to the South.

The subsurface investigation consisted of ten (10) soil profile test pits and nine (9) double-ring infiltration tests conducted at the locations and depths provided by the client. A CASE 580 Super M rubber wheeled backhoe loader was used in the investigation. The test pits were located on site using the “Field and Parking Lot Concept Plan’ Sheet C2.01, Dated 10/8/2025, drawn by LAN Associates. A detailed test pit location plan can be found below in Appendix A.

Field work was completed in accordance with NJ Stormwater Best Management Practices Manual, Chapter 12. The test pits were excavated to depths exceeding eight feet past the design basin bottom, if provided, or to groundwater, or machine refusal, if basin bottom depths were not available at the time of the investigation. Where redoximorphic features were present, their size, abundance, and contrast, and depth was recorded. Where water or moisture was encountered, it was recorded and depths notated. Where groundwater and seasonal high redoximorphic features were present, in-situ infiltration testing was performed on the most restrictive native stratum found two feet above the seasonal high markers. Soil strata were visually identified and photographed prior to backfilling the test pits.

Double-ring infiltration testing was completed utilizing a modified version of ASTM D-3385. Soil samples were collected for laboratory processing to determine permeability class rating and textural analysis per ASTM D-6913 and ASTM D-7928. The laboratory samples were collected in native soil. Soil samples collected on site will be held in the laboratory for a period of no less than 30 days. Areas disturbed during excavation and infiltration testing operations were restored upon completion. All investigative methods and summaries of results are provided in the following paragraphs. Test date: 1/14/2026-1/15/2026.

FINDINGS

The native soil was consistent with geology of the Englishtown Formation and consisted generally of two distinct strata; glauconitic fine sands clays overlaying coarse non-cohesive sands. The uppermost soil stratum consisted of fill or topsoil. Fill was encountered in the upper 3 feet of TP-1, TP-2, TP-3, TP-6, TP-7, generally in shallower depths in TP-1 and TP-6. TP-2 consisted entirely of fill materials to the depths explored. Underlying the topsoil and fills were cohesive to semi-cohesive sands and clays (sandy loams, sandy clay loams, loamy sands) which generally extended to approximately 9 feet below grade surface (BGS). Generally, at 9 feet BGS, the soils transitioned into non-cohesive coarse sands with little to no fines (sands, loamy sands) which extended to the depths explored. Fine content refers to the amount of silt and clay present in the soil. The test pits were terminated at depths ranging from 14 to 16 feet BGS.

Seasonal high water indicators, such as redoximorphic features, were not observed in the test pits. At the time of excavation, groundwater was not encountered. Perched water was encountered in TP-2 in the fill material. It should be noted that groundwater data presented on the individual test boring logs may not be representative of daily or seasonal variations in the ground water level. The seasonal high water table as indicated by mottling and other soil characteristics is only an average based on long-term fluctuations in groundwater. Actual groundwater tables may vary from average annual seasonal highs, based on precipitation frequencies and other factors.

Nine (9) double-ring infiltration tests were performed on site. The in-situ testing performed on the undisturbed native soil yielded stabilized infiltration rates ranging from 0.25 inches per hour to 4.0 inches per hour. Due to the test pit, TP-2, being composed of fill materials, an in-situ double ring infiltration test was not performed. The in-situ testing findings are detailed further in Appendix C, the Infiltration Log Soil Analysis.

Soil samples were collected for laboratory analysis to determine textural analysis and permeability class rating per ASTM D-6913 and ASTM D-7928 in each test pit where a double ring infiltration test was performed. The laboratory testing yielded class ratings ranging from K2, or 0.6 to 2 inches per hour, to K4, or 6 to 20 inches per hour**.** Generally, the in-situ infiltration testing yielded slightly slower rates than the laboratory permeability class ratings which may be attributed to the higher percentage of fine plus very fine sand present in the soil matrix, and the higher density of the undisturbed, in-place soils. The laboratory findings and locations are shown in Appendices A and B to include the Test Pit Layout Plan and Laboratory Soils Analysis. Soils encountered in the test pit are as follows: The soils are logged in USDA soil texture triangle as required by NJ Stormwater Management BMP Chapter 12; Subsection 2b.

Test Pit # 1

Depth (in.)	**Classification**
0 – 7	Moist, **FILL** 2.5Y 3/3 Very Olive Brown Topsoil; Loamy Sand, Brick, Concrete, Asphalt
7– 25	2.5Y 4/3 Olive Brown **CLAY LOAM**, little Gravel
25 – 36	2.5Y 3/3 Dark Olive Brown c.f. **SANDY LOAM**
36 – 55	2.5Y 5/6 Light Olive Brown m.f. **LOAMY SAND**, some c.f. Gravel
55 – 70	2.5Y 5/4 Light Olive Brown **SANDY LOAM**
70 – 85	5Y 5/3 Olive to 10YR 4/6 Dark Yellowish Brown m.f. **SAND**
85 – 140	10YR 5/4 Yellowish Brown m.f. **SAND**
140 – 190	2.5Y 5/3 Light Olive Brown to 10YR 5/8 Yellowish Brown f. **LOAMY SAND**
	No Groundwater Encountered / ESHWT Not Observed
	DRI at Depth 69” Rate – 4.0 in./hr.

Test Pit # 2

Depth (in.)	**Classification**
0 – 120	**FILL**; Loamy Sand Construction fill resembling Recycled Concrete aggregate (RCA), some 1’ aggregates, Asphalt, Brick, Tile, Concrete, perched water 7’-8’
120 - 170	**FILL;** Dry, Olive Brown to Yellowish Brown c.f. Loamy Sand, little construction debris, insulation debris, tile, asphalt, concrete fragments (< 15%)
	Perched Water Encountered 84” / ESHWT Not Observed
	DRI Not performed; fill soils extended past machine refusal depth

Test Pit # 3

Depth (in.)	**Classification**
0 – 6	**FILL;** Moist, 10YR 2/2 Very Dark Brown **TOPSOIL**; Loamy Sand
6 - 30	**FILL;** 10YR 5/3 Brown fine to coarse LOAMY SAND, some Concrete fragments
30 – 112	10YR 6/4 Light Yellowish Brown to 10YR 3/1 Very Dark Gray weathered, glauconitic c.f. **SANDY LOAM**
112 – 132	Dry, 5Y5/2 Olive Gray to 7.5YR 4/6 Strong Brown weathered f. **SAND**

132 – 193	Dry, 10YR 6/6 Brownish Yellow to 10YR 5/6 Yellowish Brown c.f. **SAND,** Gravel at 155"

No Groundwater Encountered / ESHWT Not Observed
DRI at Depth 37" Rate – 1.0 in./hr.

Test Pit # 4

Depth (in.)	**Classification**
0 – 7	Moist, 10YR 3/3 Dark Brown **TOPSOIL**; Loamy Sand
7 - 36	Moist, 10YR 5/8 Yellowish Brown **SANDY LOAM**
36 – 100	Moist, 10YR 4/4 Dark Yellowish Brown to 2.5Y5/3 Light Olive Brown **SANDY LOAM**
100 – 125	2.5YR 5/4 Light Olive Brown to 10YR 4/6 Dark Yellowish Brown **LOAMY LOAM**
125 – 185	10YR 5/8 Yellowish Brown to 7.5YR 4/6 Strong Brown c.f. **SAND**

No Groundwater Encountered / ESHWT Not Observed
DRI at Depth 35" Rate – 1.0 in./hr.

Test Pit # 5

Depth (in.)	**Classification**
0 – 15	Moist, 10YR 3/2 Very Dark Grayish Brown **TOPSOIL**; Loamy Sand
15 - 35	Moist, 10YR 4/6 Dark Yellowish Brown **SANDY LOAM**
35 – 55	Moist, 10YR 5/4 Yellowish Brown f. **SANDY CLAY LOAM**
55 - 62	Moist, 10YR 5/4 Yellowish Brown to 7.5YR 5/6 Strong Brown m.f. **SANDY LOAM**
62 – 86	Moist, 2.5Y 5/3Light Olive Brown f. **LOAMY SAND**
86 – 100	Dry, 10YR 5/4 Yellowish Brown c.f. **SAND**, trace to little Gravel
100 – 182	Dry, 7.5YR 4/6 Strong Brown **SAND**

No Groundwater Encountered / ESHWT Not Observed
DRI at Depth 36" Rate – 0.25 in./hr.

Test Pit # 6

Depth (in.)	**Classification**
0 – 15	**FILL**; Moist, 10YR 2/2 Very Dark Brown Topsoil, 1.5" Roots upper 5" Loamy Sand, trace Concrete, Asphalt fragments
15 - 24	Moist, 10YR 2/2 Very Dark Brown **TOPSOIL**; Loamy Sand
24 – 40	Moist, 2.5Y 5/4 Light Olive Brown c.f. **LOAMY SAND**
40 – 60	Moist, 2.5Y 4/4 Olive Brown f. **SANDY LOAM**
60 – 114	Dry, 2.5Y 5/3 Light Olive Brown & 10YR 4/6 Dark Yellowish Brown weathered, glauconitic, m.f. **SANDY CLAY LOAM**
114 – 130	Dry, 10YR 4/6 Dark Yellowish Brown & 10YR 5/6 Yellowish Brown **LOAMY SAND**, some rounded c.f. Gravel to Boulders
130 – 185	Dry, 10YR 5/6-5/5 Yellowish Brown and trace 10YR 2/1 Black c.f. **SAND**, Cobbles

No Groundwater Enountered / ESHWT Not Observed
DRI at Depth 52" Rate – 0.5 in./hr.

Test Pit # 7

Depth (in.)	Classification
0 – 6	Moist, **FILL**; 10YR 2/2 Very Dark Brown Topsoil
6 – 37	Moist, **FILL;** 2.5Y 4/3 Olive Brown, Sandy Loam, some Gravel, Concrete (< 2' fragments observed)
37 - 54	Dry, 2.5Y 5/4 Light Olive Brown to 10YR 5/4 Yellowish Brown m.f. **LOAMY SAND,** little Clay lenses (12%)
54 – 72	Dry, 2.5Y 5/3-5/4 Light Olive Brown to 7.5YR 4/6 Strong Brown m.f. weathered, glauconitic **LOAMY SAND**, little Clay lenses (15%)
72 – 112	Dry, 2.5Y 5/4 to 5/6 Olive Brown & 10YR 4/4 Dark Yellowish Brown weathered, glauconitic f. **LOAMY SAND**
112 – 155	10YR 5/4 Yellowish Brown to 7.5YR 4/6 Strong Brown c.f. **SAND**
155 – 193	7.3YR 4/6 Strong Brown c.f. **SAND**

No Groundwater Encountered / ESHWT Not Observed
DRI at Depth 42" Rate – 1.0 in./hr.

Test Pit # 8

Depth (in.)	Classification
0 – 24	Moist, 10YR 2/2 Very Dark Brown **TOPSOIL,** Loamy Sand, Roots
24 - 67	Dry, Brown **LOAMY SAND**
67 – 114	Dry, 2.5Y 4/3 Olive Brown & 10YR 4/6 Dark Yellowish Brown weathered, glauconitic m.f. **SANDY LOAM**
114 - 144	Dry, 5Y 5/2 Olive Gray to 7.5YR 4/6 Strong Brown variegated **SAND**
144 – 187	Dry, 7.5YR 4/6 Strong Brown c.f. **SAND**, little Gravel

No Groundwater Encountered / ESHWT Not Observed
DRI at Depth (36") Rate – 2.0 in./hr.

Test Pit # 9

Depth (in.)	Classification
0 – 6	Moist, 10YR 2/2 Very Dark Brown **TOPSOIL,** Loamy Sand, Roots
6 - 17	Dry, 2.5Y 3/3 Dark Olive Brown **LOAMY SAND**
17 – 52	Dry, 10YR 4/6 Dark Yellowish Brown c.f. **LOAMY SAND**
52 - 72	Dry, 10YR 3/6 Dark Yellowish Brown c.f. **SAND**
72 – 117	Dry, 7.5YR 5/6 Strong Brown m.f. glauconitic **SANDY LOAM**
117 – 135	Dry, 2.5Y 6/3 Light Yellowish Brown to 7.5YR 4/4 Brown f. **SAND**
135 – 183	Dry, 10YR 6/8 Brownish Yellow m.f. **SAND**

No Groundwater Encountered / ESHWT Not Observed
DRI at Depth 31" Rate – 2.5 in./hr.

Test Pit # 10

Depth (in.)	Classification
0 – 10	Moist, 10YR 2/2 Very Dark Brown **TOPSOIL,** Loamy Sand
10 - 35	Moist, 10YR 4/6 Dark Yellowish Brown **SANDY CLAY LOAM**
35 – 50	Moist, 2.5Y 5/3 Light Olive Brown **SANDY LOAM**

50 – 64 Dry, 2.5Y 5/3 Light Olive Brown to 7.5YR 5/6 Strong Brown m.f. **LOAMY SAND**, dense

64 – 110 Dry, 10YR 4/6 Dark Yellowish Brown c.f. **LOAMY SAND**

110 – 156 Dry, 2.5Y 5/3 Light Olive Brown & 7.5YR 5/8 Strong Brown m.f. **LOAMY SAND**

156 - 168 Moist, 7.5YR 5/6 Strong Brown weathered Gray **CLAY**

168 – 184 Moist, 10YR 5/6 Yellowish Brown **CLAY**

No Groundwater Encountered / ESHWT Not Observed

DRI at Depth 60" Rate – 1.5 in./hr.

Results of infiltration testing is contained in the table below:

Location	Depth (in.)*	Soil Classification	Stabilized Infiltration Rate (field test) (in./hr.)	Permeability Class Rating (lab tests)
TP-1	69	SANDY LOAM	4.0	K3 (2-6 in./hr.)
TP-3	37	SANDY LOAM	1.0	K3 (2-6 in./hr.)
TP-4	35	SANDY LOAM	1.0	K3 (2-6 in./hr.)
TP-5	36	SANDY CLAY LOAM	0.25	K2 (0.6-2 in./hr.)
TP-6	52	SANDY LOAM	0.5	K3 (2-6 in./hr.)
TP-7	42	LOAMY SAND	1.0	K4 (6-20 in./hr.)
TP-8	36	LOAMY SAND	2.0	K4 (6-20 in./hr.)
TP-9	31	LOAMY SAND	2.5	K4 (6-20 in./hr.)
TP-10	60	LOAMY SAND	1.5	K4 (6-20 in./hr.)

*Depths taken below existing ground surface elevations at test pit location.

QUALIFICATIONS

The findings presented in this report are based solely on the above investigation. No conclusions are to be drawn other than those specifically stated herein. This report does not reflect any variations, which may be encountered during construction. Underwood Engineering Company will not be responsible for variations in subsurface soils encountered in other areas other than those tested.

Respectfully submitted,

UNDERWOOD ENGINEERING COMPANY

Christopher T. Koss

Christopher T. Koss, P.E.

STATE OF NEW JERSEY
CHRISTOPHER T. KOSS
No. 24GE05257900
LICENSED
PROFESSIONAL ENGINEER

APPENDIX A
Test Pit Layout Plan

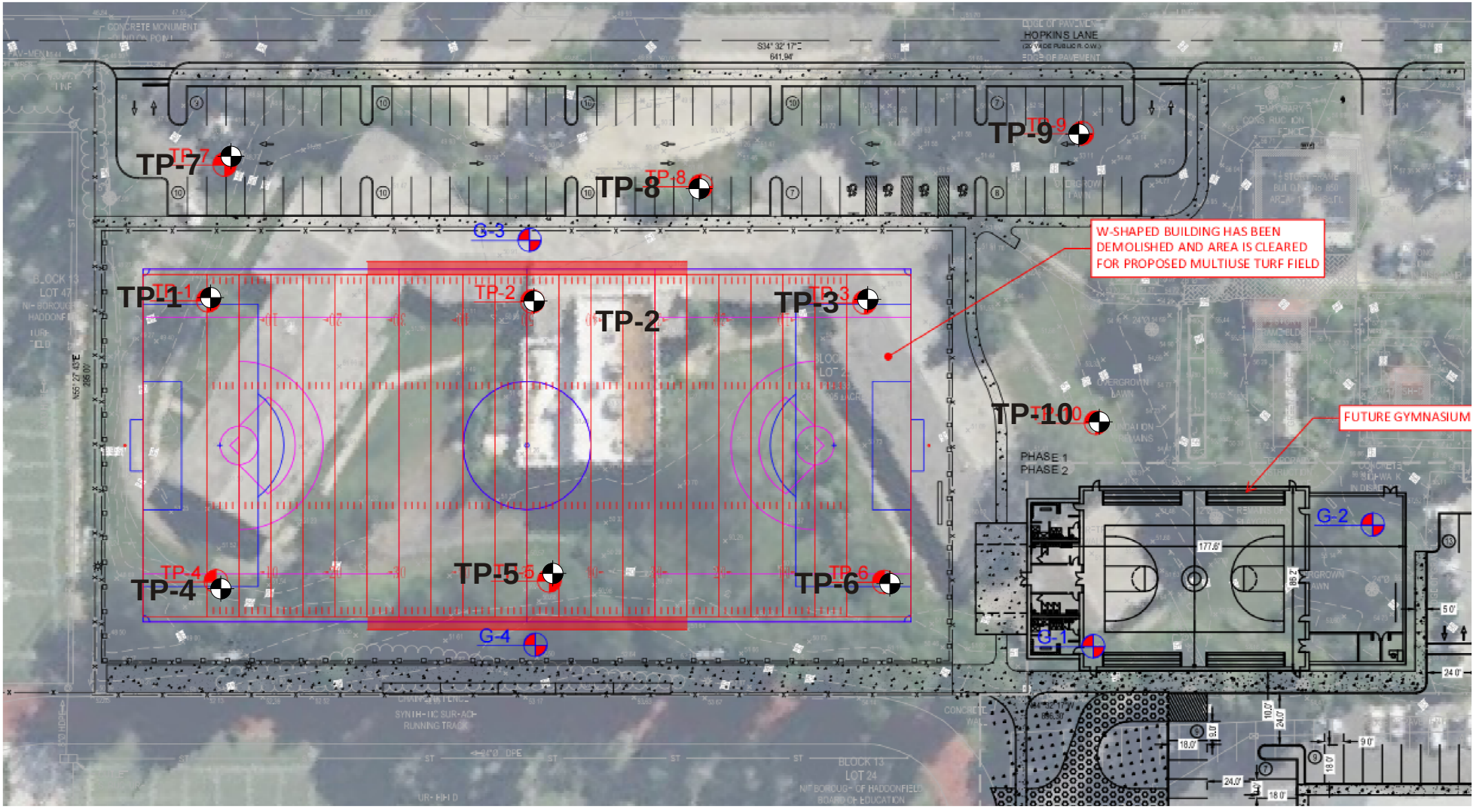

Test Pit Location T.P.-

Haddonfield Board of Education		Test Pit Location Plan			HOPKINS PARCEL ATHLETIC FACILITY IMPROVEMENTS 401 KINGS HIGHWAY EAST HADDONFIELD, CAMDEN COUNTY, NJ
Underwood Engineering Company	Scale: N.T.S.	Date: Jan 25, 2026	UE Ref. No.: 5499-20340-2	A - 1	

APPENDIX B
Laboratory Soil Analysis
(Permeability Class Rating & Textural Analysis)

Underwood Engineering Company

1 Keystone Avenue, Cherry Hill, NJ 08003

Patrick M. Underwood, President (856) 933-1818

Client: Haddonfield Board of Education C/o Lan Associates
Project: Hopkins Parcel Athletic Facility Improvements
Requirement: Hydrometer & Sieve Analysis
Date Performed: 1/19/2025
Location: TP-1 at 69 inches
Test Number: 1
Project No:5499-20340-2, WO#25-9438

ASTM D7928 HYDROMETER AND SIEVE ANALYSIS

A. COARSE FRAGMENT CONTENT

Total dry sample wt. = 250.0 Wt. retained #10 sieve (2mm) = 3.5 % Coarse framents = 1.4

B. HYDROMETER ANALYSIS

Weight used for hydrometer analysis = 100.0g
Percent Passing #10 sieve = 98.6
Temperature = 24 °C
a = 1.0 based on specific gravity of soil particles = 2.65 from Table 1 of ASTM D-422
w, weight used for hydrometer analysis/percent passing #10 x 100 = 101.4
L, value of effective depth, Table 2 of ASTM D-422 = see table below
k, based on specific gravity of soil particle and temperature = 0.01301

Time, t (minutes)	Hydrometer reading, r	Percent in suspension, P=100ra/w	L (cm)	Soil particle diam.(mm), D = k sqrt(L/t)
2	40	39.4	11.4	0.03106
5	36	35.5	11.4	0.01964
15	33	32.5	11.4	0.01134
30	30	29.6	11.4	0.00802
60	27	26.6	11.9	0.00579
250	25	24.7	12.2	0.00287
1440	22	21.7	12.7	0.00122

C. SIEVE ANALYSIS (of hydrometer sample)

Wt. passing #60 sieve (0.25mm) = 34.9 Wt retained #300 sieve (0.045mm) = 67.8
% Fine plus very fine sand = 51.5

D. SOIL MORPHOLOGY

Structure : Subangular Blocky Consistence : Friable

E. Soil Permeability CLASS RATING and TEXTURAL ANALYSIS

%Sand = 67.8 %Silt = 14.5 %Clay = 17.7

Soil Texture: SANDY LOAM
Soil Permeability Class Rating: K3

Underwood Engineering Company

1 Keystone Avenue, Cherry Hill, NJ 08003

Patrick M. Underwood, President (856) 933-1818

Client: Haddonfield Board of Education C/o Lan Associates
Project: Hopkins Parcel Athletic Facility Improvements
Requirement: Hydrometer & Sieve Analysis
Date Performed: 1/19/2025
Location: TP-3 at 37 inches
Test Number: 1
Project No:5499-20340-2, WO#25-9438

ASTM D7928 HYDROMETER AND SIEVE ANALYSIS

A. COARSE FRAGMENT CONTENT

Total dry sample wt. = 250.0 Wt. retained #10 sieve (2mm) = 1.1 % Coarse framents = 0.4

B. HYDROMETER ANALYSIS

Weight used for hydrometer analysis = 100.0g
Percent Passing #10 sieve = 99.6
Temperature = 24 °C
a = 1.0 based on specific gravity of soil particles = 2.65 from Table 1 of ASTM D-422
w, weight used for hydrometer analysis/percent passing #10 x 100 = 100.4
L, value of effective depth, Table 2 of ASTM D-422 = see table below
k, based on specific gravity of soil particle and temperature = 0.01301

Time, t (minutes)	Hydrometer reading, r	Percent in suspension, P=100ra/w	L (cm)	Soil particle diam.(mm), D = k sqrt(L/t)
2	35	34.9	11.4	0.03106
5	32	31.9	11.4	0.01964
15	30	29.9	11.4	0.01134
30	27	26.9	11.9	0.00819
60	24	23.9	12.4	0.00591
250	20	19.9	13.0	0.00297
1440	18	17.9	13.3	0.00125

C. SIEVE ANALYSIS (of hydrometer sample)

Wt. passing #60 sieve (0.25mm) = 27.1 Wt retained #300 sieve (0.045mm) = 75.9
% Fine plus very fine sand = 35.7

D. SOIL MORPHOLOGY

Structure : Subangular Blocky Consistence : Friable

E. Soil Permeability CLASS RATING and TEXTURAL ANALYSIS

%Sand = 75.9 %Silt = 11.7 %Clay = 12.4

Soil Texture: SANDY LOAM
Soil Permeability Class Rating: K3

Underwood Engineering Company

1 Keystone Avenue, Cherry Hill, NJ 08003

Patrick M. Underwood, President (856) 933-1818

Client: Haddonfield Board of Education C/o Lan Associates
Project: Hopkins Parcel Athletic Facility Improvements
Requirement: Hydrometer & Sieve Analysis
Date Performed: 1/19/2025
Location: TP-4 at 35 inches
Test Number: 1
Project No:5499-20340-2, WO#25-9438

ASTM D7928 HYDROMETER AND SIEVE ANALYSIS

A. COARSE FRAGMENT CONTENT

Total dry sample wt. = 250.0 Wt. retained #10 sieve (2mm) = 2.7 % Coarse framents = 1.1

B. HYDROMETER ANALYSIS

Weight used for hydrometer analysis = 100.0g
Percent Passing #10 sieve = 98.9
Temperature = 24 °C
a = 1.0 based on specific gravity of soil particles = 2.65 from Table 1 of ASTM D-422
w, weight used for hydrometer analysis/percent passing #10 x 100 = 101.1
L, value of effective depth, Table 2 of ASTM D-422 = see table below
k, based on specific gravity of soil particle and temperature = 0.01301

Time, t (minutes)	Hydrometer reading, r	Percent in suspension, P=100ra/w	L (cm)	Soil particle diam.(mm), D = k sqrt(L/t)
2	39	38.6	11.4	0.03106
5	37	36.6	11.4	0.01964
15	34	33.6	11.4	0.01134
30	30	29.7	11.4	0.00802
60	27	26.7	11.9	0.00579
250	25	24.7	12.2	0.00287
1440	20	19.8	13.0	0.00124

C. SIEVE ANALYSIS (of hydrometer sample)

Wt. passing #60 sieve (0.25mm) = 36.1 Wt retained #300 sieve (0.045mm) = 71.2
% Fine plus very fine sand = 50.7

D. SOIL MORPHOLOGY

Structure : Subangular Blocky Consistence : Friable

E. Soil Permeability CLASS RATING and TEXTURAL ANALYSIS

%Sand = 71.2 %Silt = 14 %Clay = 14.8

Soil Texture: SANDY LOAM
Soil Permeability Class Rating: K3

Underwood Engineering Company

1 Keystone Avenue, Cherry Hill, NJ 08003

Patrick M. Underwood, President (856) 933-1818

Client: Haddonfield Board of Education C/o Lan Associates
Project: Hopkins Parcel Athletic Facility Improvements
Requirement: Hydrometer & Sieve Analysis
Date Performed: 1/19/2025
Location: TP-5 at 36 inches
Test Number: 1
Project No:5499-20340-2, WO#25-9438

ASTM D7928 HYDROMETER AND SIEVE ANALYSIS

A. COARSE FRAGMENT CONTENT

Total dry sample wt. = 250.0 Wt. retained #10 sieve (2mm) = 0.0 % Coarse framents = 0.0

B. HYDROMETER ANALYSIS

Weight used for hydrometer analysis = 100.0g
Percent Passing #10 sieve = 100
Temperature = 24 °C
a = 1.0 based on specific gravity of soil particles = 2.65 from Table 1 of ASTM D-422
w, weight used for hydrometer analysis/percent passing #10 x 100 = 100
L, value of effective depth, Table 2 of ASTM D-422 = see table below
k, based on specific gravity of soil particle and temperature = 0.01301

Time, t (minutes)	Hydrometer reading, r	Percent in suspension, P=100ra/w	L (cm)	Soil particle diam.(mm), D = k sqrt(L/t)
2	45	45.0	11.4	0.03106
5	42	42.0	11.4	0.01964
15	38	38.0	11.4	0.01134
30	35	35.0	11.4	0.00802
60	30	30.0	11.4	0.00567
250	28	28.0	11.7	0.00281
1440	25	25.0	12.2	0.00120

C. SIEVE ANALYSIS (of hydrometer sample)

Wt. passing #60 sieve (0.25mm) = 29.1 Wt retained #300 sieve (0.045mm) = 58.9
% Fine plus very fine sand = 49.4

D. SOIL MORPHOLOGY

Structure : Subangular Blocky Consistence : Friable

E. Soil Permeability CLASS RATING and TEXTURAL ANALYSIS

%Sand = 58.9 %Silt = 18.3 %Clay = 22.8

Soil Texture: SANDY CLAY LOAM
Soil Permeability Class Rating: K2

Underwood Engineering Company

1 Keystone Avenue, Cherry Hill, NJ 08003

Patrick M. Underwood, President (856) 933-1818

Client: Haddonfield Board of Education C/o Lan Associates
Project: Hopkins Parcel Athletic Facility Improvements
Requirement: Hydrometer & Sieve Analysis
Date Performed: 1/19/2025
Location: TP-6 at 52 inches
Test Number: 1
Project No:5499-20340-2, WO#25-9438

ASTM D7928 HYDROMETER AND SIEVE ANALYSIS

A. COARSE FRAGMENT CONTENT

Total dry sample wt. = 250.0 Wt. retained #10 sieve (2mm) = 0.0 % Coarse framents = 0.0

B. HYDROMETER ANALYSIS

Weight used for hydrometer analysis = 100.0g
Percent Passing #10 sieve = 100
Temperature = 24 °C
a = 1.0 based on specific gravity of soil particles = 2.65 from Table 1 of ASTM D-422
w, weight used for hydrometer analysis/percent passing #10 x 100 = 100
L, value of effective depth, Table 2 of ASTM D-422 = see table below
k, based on specific gravity of soil particle and temperature = 0.01301

Time, t (minutes)	Hydrometer reading, r	Percent in suspension, P=100ra/w	L (cm)	Soil particle diam.(mm), D = k sqrt(L/t)
2	43	43.0	11.4	0.03106
5	41	41.0	11.4	0.01964
15	38	38.0	11.4	0.01134
30	36	36.0	11.4	0.00802
60	32	32.0	11.4	0.00567
250	30	30.0	11.4	0.00278
1440	27	27.0	11.9	0.00118

C. SIEVE ANALYSIS (of hydrometer sample)

Wt. passing #60 sieve (0.25mm) = 37 Wt retained #300 sieve (0.045mm) = 70.3
% Fine plus very fine sand = 52.6

D. SOIL MORPHOLOGY

Structure : Subangular Blocky Consistence : Friable

E. Soil Permeability CLASS RATING and TEXTURAL ANALYSIS

%Sand = 70.3 %Silt = 11.1 %Clay = 18.6

Soil Texture: SANDY LOAM
Soil Permeability Class Rating: K3

Underwood Engineering Company

1 Keystone Avenue, Cherry Hill, NJ 08003

Patrick M. Underwood, President (856) 933-1818

Client: Haddonfield Board of Education C/o Lan Associates
Project: Hopkins Parcel Athletic Facility Improvements
Requirement: Hydrometer & Sieve Analysis
Date Performed: 1/19/2026
Location: TP-7 at 42 inches
Test Number: 1
Project No:5499-20340-2, WO#25-9438

ASTM D7928 HYDROMETER AND SIEVE ANALYSIS

A. COARSE FRAGMENT CONTENT

Total dry sample wt. = 250.0 Wt. retained #10 sieve (2mm) = 2.1 % Coarse framents = 0.8

B. HYDROMETER ANALYSIS

Weight used for hydrometer analysis = 100.0g
Percent Passing #10 sieve = 99.2
Temperature = 24 °C
a = 1.0 based on specific gravity of soil particles = 2.65 from Table 1 of ASTM D-422
w, weight used for hydrometer analysis/percent passing #10 x 100 = 100.8
L, value of effective depth, Table 2 of ASTM D-422 = see table below
k, based on specific gravity of soil particle and temperature = 0.01301

Time, t (minutes)	Hydrometer reading, r	Percent in suspension, P=100ra/w	L (cm)	Soil particle diam.(mm), D = k sqrt(L/t)
2	27	26.8	11.9	0.03173
5	24	23.8	12.4	0.02049
15	20	19.8	13.0	0.01211
30	17	16.9	13.5	0.00873
60	15	14.9	13.8	0.00624
250	13	12.9	14.2	0.00310
1440	10	9.9	14.7	0.00131

C. SIEVE ANALYSIS (of hydrometer sample)

Wt. passing #60 sieve (0.25mm) = 28.8 Wt retained #300 sieve (0.045mm) = 80.2
% Fine plus very fine sand = 35.9

D. SOIL MORPHOLOGY

Structure : Granular Consistence : Friable

E. Soil Permeability CLASS RATING and TEXTURAL ANALYSIS

%Sand = 80.2 %Silt = 12.5 %Clay = 7.3

Soil Texture: LOAMY SAND
Soil Permeability Class Rating: K4

Underwood Engineering Company

1 Keystone Avenue, Cherry Hill, NJ 08003

Patrick M. Underwood, President (856) 933-1818

Client: Haddonfield Board of Education C/o Lan Associates
Project: Hopkins Parcel Athletic Facility Improvements
Requirement: Hydrometer & Sieve Analysis
Date Performed: 1/19/2026
Location: TP-8 at 36 inches
Test Number: 1
Project No:5499-20340-2, WO#25-9438

ASTM D7928 HYDROMETER AND SIEVE ANALYSIS

A. COARSE FRAGMENT CONTENT

Total dry sample wt. = 250.0 Wt. retained #10 sieve (2mm) = 3.6 % Coarse framents = 1.4

B. HYDROMETER ANALYSIS

Weight used for hydrometer analysis = 100.0g
Percent Passing #10 sieve = 98.6
Temperature = 24 °C
a = 1.0 based on specific gravity of soil particles = 2.65 from Table 1 of ASTM D-422
w, weight used for hydrometer analysis/percent passing #10 x 100 = 101.5
L, value of effective depth, Table 2 of ASTM D-422 = see table below
k, based on specific gravity of soil particle and temperature = 0.01301

Time, t (minutes)	Hydrometer reading, r	Percent in suspension, P=100ra/w	L (cm)	Soil particle diam.(mm), D = k sqrt(L/t)
2	25	24.6	12.2	0.03213
5	20	19.7	13.0	0.02098
15	18	17.7	13.3	0.01225
30	15	14.8	13.8	0.00882
60	13	12.8	14.2	0.00633
250	10	9.9	14.7	0.00315
1440	8	7.9	15.0	0.00133

C. SIEVE ANALYSIS (of hydrometer sample)

Wt. passing #60 sieve (0.25mm) = 32.3 Wt retained #300 sieve (0.045mm) = 82.9
% Fine plus very fine sand = 39

D. SOIL MORPHOLOGY

Structure : Granular Consistence : Friable

E. Soil Permeability CLASS RATING and TEXTURAL ANALYSIS

%Sand = 82.9 %Silt = 11.6 %Clay = 5.5

Soil Texture: LOAMY SAND
Soil Permeability Class Rating: K4

Underwood Engineering Company

1 Keystone Avenue, Cherry Hill, NJ 08003

Patrick M. Underwood, President (856) 933-1818

Client: Haddonfield Board of Education C/o Lan Associates
Project: Hopkins Parcel Athletic Facility Improvements
Requirement: Hydrometer & Sieve Analysis
Date Performed: 1/19/2026
Location: TP-9 at 31 inches
Test Number: 1
Project No:5499-20340-2, WO#25-9438

ASTM D7928 HYDROMETER AND SIEVE ANALYSIS

A. COARSE FRAGMENT CONTENT

Total dry sample wt. = 250.0 Wt. retained #10 sieve (2mm) = 0.0 % Coarse framents = 0.0

B. HYDROMETER ANALYSIS

Weight used for hydrometer analysis = 100.0g
Percent Passing #10 sieve = 100
Temperature = 24 °C
a = 1.0 based on specific gravity of soil particles = 2.65 from Table 1 of ASTM D-422
w, weight used for hydrometer analysis/percent passing #10 x 100 = 100
L, value of effective depth, Table 2 of ASTM D-422 = see table below
k, based on specific gravity of soil particle and temperature = 0.01301

Time, t (minutes)	Hydrometer reading, r	Percent in suspension, P=100ra/w	L (cm)	Soil particle diam.(mm), D = k sqrt(L/t)
2	24	24.0	12.4	0.03239
5	21	21.0	12.9	0.02090
15	19	19.0	13.2	0.01220
30	17	17.0	13.5	0.00873
60	13	13.0	14.2	0.00633
250	11	11.0	14.5	0.00313
1440	9	9.0	14.8	0.00132

C. SIEVE ANALYSIS (of hydrometer sample)

Wt. passing #60 sieve (0.25mm) = 37.5 Wt retained #300 sieve (0.045mm) = 85.6
% Fine plus very fine sand = 43.8

D. SOIL MORPHOLOGY

Structure : Granular Consistence : Friable

E. Soil Permeability CLASS RATING and TEXTURAL ANALYSIS

%Sand = 85.6 %Silt = 9 %Clay = 5.4

Soil Texture: LOAMY SAND
Soil Permeability Class Rating: K4

Underwood Engineering Company

1 Keystone Avenue, Cherry Hill, NJ 08003

Patrick M. Underwood, President (856) 933-1818

Client: Haddonfield Board of Education C/o Lan Associates
Project: Hopkins Parcel Athletic Facility Improvements
Requirement: Hydrometer & Sieve Analysis
Date Performed: 1/19/2026
Location: TP-10 at 60 inches
Test Number: 1
Project No:5499-20340-2, WO#25-9438

ASTM D7928 HYDROMETER AND SIEVE ANALYSIS

A. COARSE FRAGMENT CONTENT

Total dry sample wt. = 250.0 Wt. retained #10 sieve (2mm) = 1.0 % Coarse framents = 0.4

B. HYDROMETER ANALYSIS

Weight used for hydrometer analysis = 100.0g
Percent Passing #10 sieve = 99.6
Temperature = 24 °C
a = 1.0 based on specific gravity of soil particles = 2.65 from Table 1 of ASTM D-422
w, weight used for hydrometer analysis/percent passing #10 x 100 = 100.4
L, value of effective depth, Table 2 of ASTM D-422 = see table below
k, based on specific gravity of soil particle and temperature = 0.01301

Time, t (minutes)	Hydrometer reading, r	Percent in suspension, P=100ra/w	L (cm)	Soil particle diam.(mm), D = k sqrt(L/t)
2	29	28.9	11.5	0.03120
5	27	26.9	11.9	0.02007
15	24	23.9	12.4	0.01183
30	22	21.9	12.7	0.00846
60	19	18.9	13.2	0.00610
250	16	15.9	13.7	0.00305
1440	13	12.9	14.2	0.00129

C. SIEVE ANALYSIS (of hydrometer sample)

Wt. passing #60 sieve (0.25mm) = 35.1 Wt retained #300 sieve (0.045mm) = 80.8
% Fine plus very fine sand = 43.4

D. SOIL MORPHOLOGY

Structure : Granular Consistence : Friable

E. Soil Permeability CLASS RATING and TEXTURAL ANALYSIS

%Sand = 80.8 %Silt = 10.6 %Clay = 8.6

Soil Texture: LOAMY SAND
Soil Permeability Class Rating: K4

APPENDIX C
Infiltration Log Soil Analysis

2025

PWD Stormwater Infiltration Testing Log

Report No.:	1
Issue No.:	1

Client: Haddonfield Board of Education **cc:**

Project: Hopkins Parcel Athletic Facility Improvements

Work Date: 1/15/2026

Submitted By: M. Wanberg
Date of Issue: 1/25/2026

Project Name: Hopkins Parcel Athletic Facility Improvements

Project Address: 401 Kings Highway East, Haddonfield, NJ 08033

Date: 1/15/2026 **Email Address:** mwanberg@underwood-engineering.com

Weather: High 30's, P. Sunny **Tester's Name:** M. Wanberg

Testing Company: Underwood Engineering Inc. **Instrument Diameter (inches):** 6"

Phone Number: 856-933-1818 **Test Method:** Double-Ring Infiltrometer

Test Number: DRI-1 **Test Pit/Boring Hole Number:** TP-1 **Test Depth (inches):** 69"

Surface Elevation (feet):

Soil Characterization

Depth (inches):	Soil Texture:	Limiting Layers Type and Depth (Inches):
69	SANDY LOAM	

Presoak

Time:	Time Interval:	Measurement (Inches):	Drop in Water Level (Inches):
8:56	0	0	0
9:26	30	2.0	2.0
9:56	30	2.0	2.0

Infiltration Testing

Time:	Time Interval (10 or 30 mintues):	Measurement (Inches):	Drop in Water Level (Inches):	Infiltration Rate (inches per hour):	Remarks:
9:56	0	0	0	4.0	
10:26	30	2.0	2.0	4.0	
10:56	30	2.0	2.0	4.0	
11:26	30	2.0	2.0	4.0	
11:56	30	2.0	2.0	4.0	

Stabilized Infiltration Testing Rate (inches per hour): 4.0

2025

PWD Stormwater Infiltration Testing Log

Report No.:	1
Issue No.:	1

Client: Haddonfield Board of Education **cc:**

Project: Hopkins Parcel Athletic Facility Improvements

Work Date: 1/15/2026

Submitted By: M. Wanberg
Date of Issue: 1/25/2026

Project Name: Hopkins Parcel Athletic Facility Improvements

Project Address: 401 Kings Highway East, Haddonfield, NJ 08033

Date: 1/15/2026 **Email Address:** mwanberg@underwood-engineering.com

Weather: Mid 30's, Sunny **Tester's Name:** M. Wanberg

Testing Company: Underwood Engineering Inc. **Instrument Diameter (inches):** 6"

Phone Number: 856-933-1818 **Test Method:** Double-Ring Infiltrometer

Test Number: DRI-1 **Test Pit/Boring Hole Number:** TP-3 **Test Depth (inches):** 37"

Surface Elevation (feet):

Soil Characterization

Depth (inches):	Soil Texture:	Limiting Layers Type and Depth (Inches):
37	SANDY LOAM	

Presoak

Time:	Time Interval:	Measurement (Inches):	Drop in Water Level (Inches):
11:05	0	0	0
11:35	30	1.0	1.0
12:05	30	0.5	0.5

Infiltration Testing

Time:	Time Interval (10 or 30 mintues):	Measurement (Inches):	Drop in Water Level (Inches):	Infiltration Rate (inches per hour):	Remarks:
12:05	0	0	0	1.0	
12:35	30	0.5	0.5	1.0	
1:05	30	0.5	0.5	1.0	
1:35	30	0.5	0.5	1.0	
2:05	30	0.5	0.5	1.0	
			Stabilized Infiltration Testing Rate (inches per hour):	1.0	

2025

PWD Stormwater Infiltration Testing Log

Report No.:	1
Issue No.:	1

Client: Haddonfield Board of Education **cc:**

Project: Hopkins Parcel Athletic Facility Improvements

Work Date: 1/14/2026

Submitted By: M. Wanberg
Date of Issue: 1/25/2026

Project Name: Hopkins Parcel Athletic Facility Improvements

Project Address: 401 Kings Highway East, Haddonfield, NJ 08033

Date: 1/14/2026 **Email Address:** mwanberg@underwood-engineering.com

Weather: Low 50's, Mostly Cloudy **Tester's Name:** M. Wanberg

Testing Company: Underwood Engineering Inc. **Instrument Diameter (inches):** 6"

Phone Number: 856-933-1818 **Test Method:** Double-Ring Infiltrometer

Test Number: DRI-1 **Test Pit/Boring Hole Number:** TP-4 **Test Depth (inches):** 35"

Surface Elevation (feet):

Soil Characterization

Depth (inches):	Soil Texture:	Limiting Layers Type and Depth (Inches):
35	SANDY LOAM	

Presoak

Time:	Time Interval:	Measurement (Inches):	Drop in Water Level (Inches):
2:30	0	0	0
3:00	30	0.5	0.5
3:30	30	0.5	0.5

Infiltration Testing

Time:	Time Interval (10 or 30 mintues):	Measurement (Inches):	Drop in Water Level (Inches):	Infiltration Rate (inches per hour):	Remarks:
3:30	0	0	0	1.0	
4:00	30	0.5	0.5	1.0	
4:30	30	0.5	0.5	1.0	
5:00	30	0.5	0.5	1.0	
5:30	30	0.5	0.5	1.0	

Stabilized Infiltration Testing Rate (inches per hour): 1.0

2025

PWD Stormwater Infiltration Testing Log

Report No.:	1
Issue No.:	1

Client: Haddonfield Board of Education **cc:**

Project: Hopkins Parcel Athletic Facility Improvements

Work Date: 1/14/2026

Submitted By: M. Wanberg
Date of Issue: 1/25/2026

Project Name: Hopkins Parcel Athletic Facility Improvements

Project Address: 401 Kings Highway East, Haddonfield, NJ 08033

Date: 1/14/2026 **Email Address:** mwanberg@underwood-engineering.com

Weather: Mid 50's, M. Cloudy **Tester's Name:** M. Wanberg

Testing Company: Underwood Engineering Inc. **Instrument Diameter (inches):** 6"

Phone Number: 856-933-1818 **Test Method:** Double-Ring Infiltrometer

Test Number: DRI-1 **Test Pit/Boring Hole Number:** TP-5 **Test Depth (inches):** 36"

Surface Elevation (feet):

Soil Characterization

Depth (inches):	Soil Texture:	Limiting Layers Type and Depth (Inches):
36	SANDY CLAY LOAM	

Presoak

Time:	Time Interval:	Measurement (Inches):	Drop in Water Level (Inches):
1:24	0	0	0
1:54	30	0.25	0.25
2:24	30	0.13	0.13

Infiltration Testing

Time:	Time Interval (10 or 30 mintues):	Measurement (Inches):	Drop in Water Level (Inches):	Infiltration Rate (inches per hour):	Remarks:
2:24	0	0	0	0.25	
2:54	30	0.13	0.13	0.25	
3:24	30	0.13	0.13	0.25	
3:54	30	0.13	0.13	0.25	
4:24	30	0.13	0.13	0.25	

Stabilized Infiltration Testing Rate (inches per hour): 0.25

2025

PWD Stormwater Infiltration Testing Log

Report No.:	1
Issue No.:	1

Client: Haddonfield Board of Education **cc:**

Project: Hopkins Parcel Athletic Facility Improvements

Work Date: 1/14/2026

Submitted By: M. Wanberg
Date of Issue: 1/25/2026

Project Name: Hopkins Parcel Athletic Facility Improvements

Project Address: 401 Kings Highway East, Haddonfield, NJ 08033

Date: 1/14/2026 **Email Address:** mwanberg@underwood-engineering.com

Weather: Mid 50's, M. Cloudy **Tester's Name:** M. Wanberg

Testing Company: Underwood Engineering Inc. **Instrument Diameter (inches):** 6"

Phone Number: 856-933-1818 **Test Method:** Double-Ring Infiltrometer

Test Number: DRI-1 **Test Pit/Boring Hole Number:** TP-6 **Test Depth (inches):** 52"

Surface Elevation (feet):

Soil Characterization

Depth (inches):	Soil Texture:	Limiting Layers Type and Depth (Inches):
52	SANDY LOAM	

Presoak

Time:	Time Interval:	Measurement (Inches):	Drop in Water Level (Inches):
10:54	0	0	0
11:24	30	0.25	0.25
11:54	30	0.25	0.25

Infiltration Testing

Time:	Time Interval (10 or 30 mintues):	Measurement (Inches):	Drop in Water Level (Inches):	Infiltration Rate (inches per hour):	Remarks:
11:54	0	0	0	0.5	
12:24	30	0.25	0.25	0.5	
12:54	30	0.25	0.25	0.5	
1:24	30	0.25	0.25	0.5	
1:54	30	0.25	0.25	0.5	
			Stabilized Infiltration Testing Rate (inches per hour):	0.5	

2025

PWD Stormwater Infiltration Testing Log

Report No.:	1
Issue No.:	1

Client: Haddonfield Board of Education **cc:**

Project: Hopkins Parcel Athletic Facility Improvements

Work Date: 1/15/2026

Submitted By: M. Wanberg
Date of Issue: 1/25/2026

Project Name: Hopkins Parcel Athletic Facility Improvements

Project Address: 401 Kings Highway East, Haddonfield, NJ 08033

Date: 1/15/2026 **Email Address:** mwanberg@underwood-engineering.com

Weather: Mid 30's, Sunny **Tester's Name:** M. Wanberg

Testing Company: Underwood Engineering Inc. **Instrument Diameter (inches):** 6"

Phone Number: 856-933-1818 **Test Method:** Double-Ring Infiltrometer

Test Number: DRI-1 **Test Pit/Boring Hole Number:** TP-7 **Test Depth (inches):** 42"

Surface Elevation (feet):

Soil Characterization

Depth (inches):	Soil Texture:	Limiting Layers Type and Depth (Inches):
42	LOAMY SAND	

Presoak

Time:	Time Interval:	Measurement (Inches):	Drop in Water Level (Inches):
9:55	0	0	0
10:25	30	0.75	0.75
10:55	30	0.75	0.75

Infiltration Testing

Time:	Time Interval (10 or 30 mintues):	Measurement (Inches):	Drop in Water Level (Inches):	Infiltration Rate (inches per hour):	Remarks:
10:55	0	0	0	1.5	
11:25	30	0.5	0.5	1.0	
11:55	30	0.5	0.5	1.0	
12:25	30	0.5	0.5	1.0	
12:55	30	0.5	0.5	1.0	

Stabilized Infiltration Testing Rate (inches per hour): 1.0

2025

PWD Stormwater Infiltration Testing Log

Report No.:	1
Issue No.:	1

Client: Haddonfield Board of Education **cc:**

Project: Hopkins Parcel Athletic Facility Improvements

Work Date: 1/15/2026

Submitted By: M. Wanberg
Date of Issue: 1/25/2026

Project Name: Hopkins Parcel Athletic Facility Improvements

Project Address: 401 Kings Highway East, Haddonfield, NJ 08033

Date: 1/15/2026 **Email Address:** mwanberg@underwood-engineering.com

Weather: Mid 30's, Sunny **Tester's Name:** M. Wanberg

Testing Company: Underwood Engineering Inc. **Instrument Diameter (inches):** 6"

Phone Number: 856-933-1818 **Test Method:** Double-Ring Infiltrometer

Test Number: DRI-1 **Test Pit/Boring Hole Number:** TP-8 **Test Depth (inches):** 36"

Surface Elevation (feet):

Soil Characterization

Depth (inches):	Soil Texture:	Limiting Layers Type and Depth (Inches):
36	LOAMY SAND	

Presoak

Time:	Time Interval:	Measurement (Inches):	Drop in Water Level (Inches):
12:08	0	0	0
12:38	30	1.5	1.5
1:08	30	1.25	1.25

Infiltration Testing

Time:	Time Interval (10 or 30 mintues):	Measurement (Inches):	Drop in Water Level (Inches):	Infiltration Rate (inches per hour):	Remarks:
1:08	0	0	0	2.5	
1:38	30	1.0	1.0	2.0	
2:08	30	1.0	1.0	2.0	
2:38	30	1.0	1.0	2.0	
3:08	30	1.0	1.0	2.0	

Stabilized Infiltration Testing Rate (inches per hour): 2.0

2025

PWD Stormwater Infiltration Testing Log

Report No.:	1
Issue No.:	1

Client: Haddonfield Board of Education **cc:**

Project: Hopkins Parcel Athletic Facility Improvements

Work Date: 1/15/2026

Submitted By: M. Wanberg
Date of Issue: 1/25/2026

Project Name: Hopkins Parcel Athletic Facility Improvements

Project Address: 401 Kings Highway East, Haddonfield, NJ 08033

Date: 1/15/2026 **Email Address:** mwanberg@underwood-engineering.com

Weather: Mid 30's, Sunny **Tester's Name:** M. Wanberg

Testing Company: Underwood Engineering Inc. **Instrument Diameter (inches):** 6"

Phone Number: 856-933-1818 **Test Method:** Double-Ring Infiltrometer

Test Number: DRI-1 **Test Pit/Boring Hole Number:** TP-9 **Test Depth (inches):** 31"

Surface Elevation (feet):

Soil Characterization

Depth (inches):	Soil Texture:	Limiting Layers Type and Depth (Inches):
31	LOAMY SAND	

Presoak

Time:	Time Interval:	Measurement (Inches):	Drop in Water Level (Inches):
11:41	0	0	0
12:11	30	2.0	2.0
12:41	30	1.5	1.5

Infiltration Testing

Time:	Time Interval (10 or 30 mintues):	Measurement (Inches):	Drop in Water Level (Inches):	Infiltration Rate (inches per hour):	Remarks:
12:41	0	0	0	3.0	
1:11	30	1.5	1.5	3.0	
1:41	30	1.5	1.5	3.0	
2:11	30	1.25	1.25	2.5	
2:41	30	1.25	1.25	2.5	
3:11	30	1.25	1.25	2.5	
3:41	30	1.25	1.25	2.5	

Stabilized Infiltration Testing Rate (inches per hour): 2.5

2025

PWD Stormwater Infiltration Testing Log

Report No.:	1
Issue No.:	1

Client: Haddonfield Board of Education **cc:**

Project: Hopkins Parcel Athletic Facility Improvements

Work Date: 1/14/2026

Submitted By: M. Wanberg
Date of Issue: 1/25/2026

Project Name: Hopkins Parcel Athletic Facility Improvements

Project Address: 401 Kings Highway East, Haddonfield, NJ 08033

Date: 1/14/2026 **Email Address:** mwanberg@underwood-engineering.com

Weather: Mid 50's, M. Cloudy **Tester's Name:** M. Wanberg

Testing Company: Underwood Engineering Inc. **Instrument Diameter (inches):** 6"

Phone Number: 856-933-1818 **Test Method:** Double-Ring Infiltrometer

Test Number: DRI-1 **Test Pit/Boring Hole Number:** TP-10 **Test Depth (inches):** 60"

Surface Elevation (feet):

Soil Characterization

Depth (inches):	Soil Texture:	Limiting Layers Type and Depth (Inches):
60	LOAMY SAND	

Presoak

Time:	Time Interval:	Measurement (Inches):	Drop in Water Level (Inches):
12:08	0	0	0
12:38	30	1.5	1.5
1:08	30	1.0	1.0

Infiltration Testing

Time:	Time Interval (10 or 30 mintues):	Measurement (Inches):	Drop in Water Level (Inches):	Infiltration Rate (inches per hour):	Remarks:
1:08	0	0	0	2.0	
1:38	30	0.75	0.75	1.5	
2:08	30	0.75	0.75	1.5	
2:38	30	0.75	0.75	1.5	
3:08	30	0.75	0.75	1.5	
			Stabilized Infiltration Testing Rate (inches per hour):	1.5	

SOIL AND FOUNDATION
ENGINEERING REPORT

PROPOSED 2-STORY ADDITION & IMPROVEMENTS
TATEM ELEMENTARY SCHOOL
1 GLOVER AVENUE
BOROUGH OF HADDONFIELD
CAMDEN COUNTY, NEW JERSEY

FOR

LAN ASSOCIATES

July 6, 2026

UNDERWOOD ENGINEERING COMPANY

U.E. Reference No.: 5583-20393-1

W.O #: 26-4002

UNDERWOOD ENGINEERING COMPANY

SOIL & FOUNDATION ENGINEERING

1 Keystone Avenue. Suite 300, Cherry Hill, NJ 08003

Patrick M. Underwood - **President** **Phone (856) 933-1818**

7/6/2026

LAN Assocuates
1018 Laurel Oak Road, Suite 11
Voorhees, NJ, 08043

RE : Soil and Foundation Engineering Report
Proposed 2-Story Addition
Tatem Elementary School
1 Glover Avenue
Haddonfield, NJ

U.E. Reference No.: 5583-20393-1
W.O. #: 26-4002

Sir/Madame:

Underwood Engineering Company has been retained by LAN Associates to perform a soil investigation, analysis and to make recommendations for the most suitable foundation system for the above referenced project. Presented herewith is the required information.

We appreciate the opportunity of working with you on this project. If we may be of further assistance, please do not hesitate to contact our office.

Respectfully submitted,
UNDERWOOD ENGINEERING COMPANY

Christopher T. Koss, P.E.

STATE OF NEW JERSEY
CHRISTOPHER T. KOSS
No. 24GE05257900
LICENSED
PROFESSIONAL ENGINEER

Table of Contents

I SITE DESCRIPTION 1
A. Location 1
B. Surface Conditions 1
C. Site Plan 1
II PROJECT DESCRIPTION 1
A. Type of Structure 1
B. Loads & Spacings 1
C. Finished Floor (FF) Elevation 2
III FIELD INVESTIGATION & SUBSURFACE CONDITIONS 2
A. Field Investigation 2
1) Borings 2
2) Water Table 3
IV RECOMMENDATIONS 3
A. Earthwork 3
1) Existing Topsoil & Deleterious Materials 3
2) Construction Dewatering 3
3) Proofrolling & Densification 4
4) Structural Fill Placement 4
5) On Site Soils 5
6) Backfilling & Densification of Load-Bearing Fill 5
7) Compaction 6
8) Foundation Compaction 6
B. Addition Foundations 6
1) Option #1 – Conventional Spread Footings 6
2) Elevations 7
3) Minimum Depth of Foundation 7
4) Allowable Bearing Values 7
5) Settlements 7
6) Option #2 – RS Round Shaft Helical Pile 8
7) Helical Pile Specifications for RS Round Shaft Pile 8
C. Lateral Earth Pressures 10
D. Concrete Floor Slabs 10
V INSPECTION 11
VI QUALIFICATIONS 11

Appendix A - Boring Location Plan
Appendix B - Boring Logs
Appendix C – Mechanical Sieve (Gradation) Analysis Results
Appendix D – General Soil Terms
Appendix E – Important Information about Your Geotechnical Engineering Report -ASFE

I SITE DESCRIPTION

A. Location

The building site is located at 1 Glover Avenue in the Borough of Haddonfield, Camden County, New Jersey.

B. Surface Conditions

The proposed addition area is presently grass-covered and considered generally flat to gently sloping, with ground surface elevations ranging from El.: 46.5 to El.: 43.5.

C. Site Plan

A site plan showing the proposed addition location was prepared by LAN Associates entitled "Overall Site Plan – V2 Tatem Addition, Alterations & Additions to Tatem J. Fithian Elementary School, Haddonfield Board of Education, 1 Glover Ave., Haddonfield, NJ 08033".

II PROJECT DESCRIPTION

A. Type of Structure

The project is to consist of the proposed construction of a 2-story classroom addition to the existing school building. Framework for the proposed addition is anticipated to be structural steel and masonry with concrete floor slabs on grade.

B. Loads & Spacings

Loads and spacings are anticipated to be typical for this type of construction, i.e., no extraordinary loads are anticipated. The maximum anticipated loading conditions provided are as follows:

Max. Column: 60 kips

Max. Wall: 5.2 kips/lin. ft.

C. Finished Floor (FF) Elevation

Based on the site information provided to date, the proposed finished floor (FF) elevation for the proposed addition is assumed to approximate existing grade elevations.

Proposed FF El.: 45.67

III FIELD INVESTIGATION & SUBSURFACE CONDITIONS

A. Field Investigation

1) Borings

The field investigation consisted of two (2) soil borings advanced to a depth of thirty-five (35) feet with standard penetration resistance per ASTM D-1586. Continuous split spoon sampling of soils was conducted to a depth of ten (10) feet and at five (5) foot intervals thereafter. The findings and locations are shown in Appendices A and B to include the **Boring Location Plan** and **Soil Boring Logs**.

The site soils encountered consisted generally of the following profile:

Zone 1 - SAND

Coarse to fine sand with trace to little silt, clay and fine gravel. Based on the standard penetration test (SPT) data recorded during drilling and sampling operations, the granular soils of Zone 1 encountered are considered loose to medium dense. Zone 1 soils were encountered in both test borings completed to depths of twenty (20) to thirty (30) feet below the existing ground surface.

Zone 2 – Silty, Clayey SAND

Loose to medium dense, fine to coarse silty, clayey sands with trace fine gravel. Soils of Zone 2 were encountered in both of the test borings completed, directly below the granular soils of Zone 1, and to the depth explored (35 ft. bgs).

See attached **Soil Boring Logs** (Appendix B) for more detailed soil descriptions and profiles.

2) Water Table

The ground water table was encountered at a depth of thirteen (13) feet below the surface as evidenced by direct observation and saturation of the soil samples.

It should be noted that the ground water data presented on the individual boring logs may not be representative of daily or seasonal variations in the ground water level.

IV RECOMMENDATIONS

A. Earthwork

1) Existing Topsoil & Deleterious Materials

All existing topsoil, vegetation and all deleterious materials are to be removed from the proposed building areas.

2) Construction Dewatering

Based on the test boring data, contact with static groundwater during the earthwork activities, excavation for foundations, utilities etc. is not anticipated. Should trapped or perched groundwater water be encountered, the dewatering specifications should be of a type capable of maintaining the water table a minimum of two (2) feet below the prevailing excavation bottom during the excavations as well as during

backfill operations. As stated above, groundwater and/or perched water levels encountered during construction may vary from those encountered during soil boring operations due to seasonal variations or other climatic conditions. Should water be encountered during earthwork activities, foundation excavations and utility trenches, etc, temporary dewatering may be required i.e. installation of sump pits/pumps.

3) Proofrolling & Densification

The exposed subgrades for concrete slabs on grade are to be proofrolled with a vibratory compactor in the presence of the soil engineer to detect and repair any unsuitable soil conditions and to attain a uniform firm subgrade throughout. Any loose soils encountered may be densified by proofrolling and further compaction by additional passes if necessary. This is extremely important due to areas of loose soils encountered in the soil borings.

Prior to placement of structural fills, building pad area subgrades are to be densified utilizing a 20-ton equivalent vibratory compactor. A minimum of six (6) passes over the building subgrade areas is recommended.

4) Structural Fill Placement

Bring existing grade up to the desired elevation with a granular type soil that complies with the following specifications or soils which are reviewed and approved by the soil engineer and compact it to within the specifications listed under **Compaction**, unless approved by the Soils Engineer.

SIEVE SIZE	Percent by Weight Passing Square Mesh Sieve
2”	100
3/4”	70-100
#4	30-80
#50	10-35
#200	5-12

It is strongly recommended that bulk samples of material to be used as load bearing structural fill be taken and tested prior to the commencement of work so that moisture / density relationships (compaction) can be determined.

5) On Site Soils

On site granular soils (Zone 1), as approved by the Soil Engineer, are suitable for use as load-bearing structural fill but will require strict moisture control due to the presence of fine grain material (i.e. silt and clay). If on site soils are used as structural fill, they must be placed under favorable weather conditions for the soils to dry within optimum moisture content ranges. This is extremely important in order to properly compact the soils as specified herein. If inclement weather is a factor, the onsite soils may be unsuitable and provisions should be taken to import suitable structural fill materials.

6) Backfilling & Densification of Load-Bearing Fill

Building subgrades may be brought up to desired elevation with approved on-site soils or imported structural fill in lifts no greater than ten (10) inches loose thickness and compacted to 95% of the materials maximum dry density per ASTM D-1557 as illustrated below. Materials compacted by hand operated equipment shall be placed in lifts no greater than four (4) inches loose thickness.

7) Compaction

All backfill and fill materials should be compacted to the degree noted in the following table in accordance with ASTM D-1557 latest standard.

Building Area	% Maximum Dry Density (ASTM D-1557)
Supporting Foundations	98%
Supporting Floor Slabs	95%
Pavements	95%
Site (Non Load Bearing)	90%

8) Foundation Compaction

All exposed footing subgrades are to be compacted by two (2) passes with a jumping jack compactor immediately prior to the placement of the footing concrete.

B. Addition Foundations

1) Option #1 – Conventional Spread Footings

The proposed addition is to be placed on a spread footing foundation system. Due to the loose soil conditions encountered during the subsurface investigation, ground improvement will be required to provide uniform support for the proposed structure and concrete floor slabs on grade. Soils in the area of the proposed structure are to be improved as follows:

a) Ground Improvement - Soil Removal & Replacement

Remove five (5) feet of the loose soils beneath the slab-on-grade subgrade foundation areas to a width of five (5) feet beyond the building lines to stable natural ground. Deeper excavations may be required where fill is encountered in areas other than those identified during the initial subsurface investigation.

Densify the exposed subgrade with a minimum of six (6) passes with a twenty (20) ton equivalent vibratory compactor to 95 % of the materials maximum dry density per ASTM D-1557.

Backfill and densify approved structural fill **(over excavated loose granular soils or imported structural fill)** to 95 % the materials maximum dry density in accordance with recommendations listed under **Compaction.**

Backfill materials are to be brought up to design subgrade in lifts no greater than ten (10) inches loose thickness as detailed above.

2) Elevations

The footings may be placed at any elevation provided the minimum depth criteria are met and the recommendations listed herein are performed.

3) Minimum Depth of Foundation

All footing bottoms are to be founded at least three (3) feet beneath or away from atmospherically exposed final soil subgrade.

4) Allowable Bearing Values

The spread footing foundations for the addition may be designed for a maximum allowable bearing capacity of 2,000 Pounds per Square Foot provided that the requirements under **Earthwork** are adhered to strictly.

5) Settlements

Using the allowable bearing value and following the recommendations under **Earthwork** will keep total and differential settlements negligible.

6) Option #2 – RS Round Shaft Helical Pile

The proposed foundations for the new addition are to be supported by helical piles and reinforced concrete grade beams / pile caps.

The helical piles are to have an 8- inch, 10- inch and 12-inch diameter helix and 2.875-inch round shaft as manufactured by the IDEAL Group Round Shaft 278276 or approved equal. Each anchor is to have a design capacity of 10 Tons.

a) Tip Elevations

All helical piles are to be installed to a minimum depth of twenty-eight (28) feet below the existing ground surface and then driven to the required capacity. Pile lengths provided are to be used for budgetary purposes only. Actual driven depths may vary and will be dictated primarily by but not limited to changes in relative soil densities and site grading. A pile load test is to be performed to ensure required capacities are achieved at the recommended depths and at the required elevations.

b) Installation

Helical piles are to be installed to a minimum depth of approximately twenty-eight (28) feet below the existing ground surface elevations into the medium dense granular soils and to a minimum torque of 5,500 ft.-lbs.

All helical piles are to be connected to an approved load transfer device in accordance with the recommendations of the manufacture.

7) Helical Pile Specifications for RS Round Shaft Pile

All piles are to be installed in accordance with project plans and specifications. IDEAL GROUP or approved equal.

a) All helical piles shall be approved as per IBC 2018/ASCE 7-05.

b) Helical pile lead sections shall be Model 278276 with 2.875-inch round shaft. Each helical pile lead section is having a 8-inch, 10-inch and 12-inch, three (3) helix foundation.

c) Helix pile extension may be 5, 7 or 10 feet long depending on vertical clearance. Each anchor is to have a minimum rated working capacity of 10 tons.

d) All helical piles, extensions and appurtenances shall be hot-dipped galvanized steel in accordance with ASTM A123.

e) All pile installation operations shall be supervised by a licensed engineer or qualified representative. The inspector shall keep a complete record of pile installation operation.

f) Helical piles shall be installed to a minimum depth of twenty-eight (28) feet below the existing ground surface elevations into Zone 2 granular soils and to a minimum torque of 5,500 ft.-lbs.

g) If the minimum torque requirement has not been satisfied at the minimum depth level, the contractor shall have the following options:
   1. Install the pile deeper using additional extensions until the specified torque level is obtained.
   2. Remove the existing pile and install a pile with larger and/or more helices. The revised pile shall be installed beyond termination depth of the original pile, as directed by the engineer.

h) Helical piles are to be installed under the proposed foundation as specified by the Architect or Design Engineer. The Engineer of record must approve all changes in pile locations.

i) If underground obstructions are encountered during installation, the contractor shall have the option of removing the obstruction if possible or relocating the pile with the Engineer's approval. The later approval may require the relocation of adjacent piles.

j) The helical pile shall be connected to the structure using the appropriate connections designed / specified by the structural engineer to transfer the structural loads from the footings / pile caps to the helical anchors.

k) Written installation records shall be obtained for each helical pile. These records shall include, but are not limited to the following:
   1. Project name and / or location.
   2. Name of Contractor's foreman or representative who witnessed the installation.
   3. Date and time of installation.
   4. Location and reference number of each pile.
   5. Description of lead section and extensions installed.
   6. Overall depth of installations reference from existing ground surface elevations.
   7. Torque readings for the last three feet of installation if practical. In lieu of this requirement, the terminal torque shall be recorded as a minimum.
   8. Any other relevant information relating to the installation.

C. Lateral Earth Pressures

The following values may be used for calculating lateral earth pressures:

Active Earth Pressure Coefficient, $K_A = 0.32$

At Rest Earth Pressure Coefficient, $K_R = 0.40$

Passive Earth Pressure Coefficient, $K_P = 4.00$

Unit Weight of Soil, $\gamma = 120$ lbs. / ft^3

The above values assume a porous, free draining backfill soil.

D. Concrete Floor Slabs

Concrete floor slabs may be placed on grade provided they are underlain by a minimum of four (4) inches of porous material and all soft areas are to be removed and repaired as recommended under **Earthwork**.

V INSPECTION

It is recommended that all earthwork operations be inspected full time by a qualified representative of the Soil Engineer, especially the proofrolling operations, pile driving operations and all footing subgrades immediately prior to placing the footing concrete. Foundation excavation evaluations should be performed to confirm that the design allowable bearing pressure is available. Footing subgrade evaluations should be performed through a combination of visual observation and hand rod probing in conjunction with comparison to the test borings. Concrete placement should be performed immediately after footing subgrade evaluations are made to prevent exposure and potential weakening of foundation subgrades.

VI QUALIFICATIONS

Our recommendations are based on the subsurface conditions as revealed by the test borings, and on the assumptions outlined in the Project Description and Site Description sections of this report.

Our recommendations are also based on the assumption that the provisions for strict field inspection will be followed as outlined.

This report does not reflect any variations which may be encountered during construction.

We should be informed immediately of such conditions so that we may modify our conclusions and recommendations, if necessary.

Underwood Engineering Company will not be responsible for variations in subsurface soils encountered in areas other than those tested.

Respectfully submitted,
UNDERWOOD ENGINEERING COMPANY

Christopher T. Koss

Christopher T. Koss, P.E.

STATE OF NEW JERSEY
CHRISTOPHER T. KOSS
No. 24GE05257900
LICENSED
PROFESSIONAL ENGINEER

Appendix A
Boring Location Plan

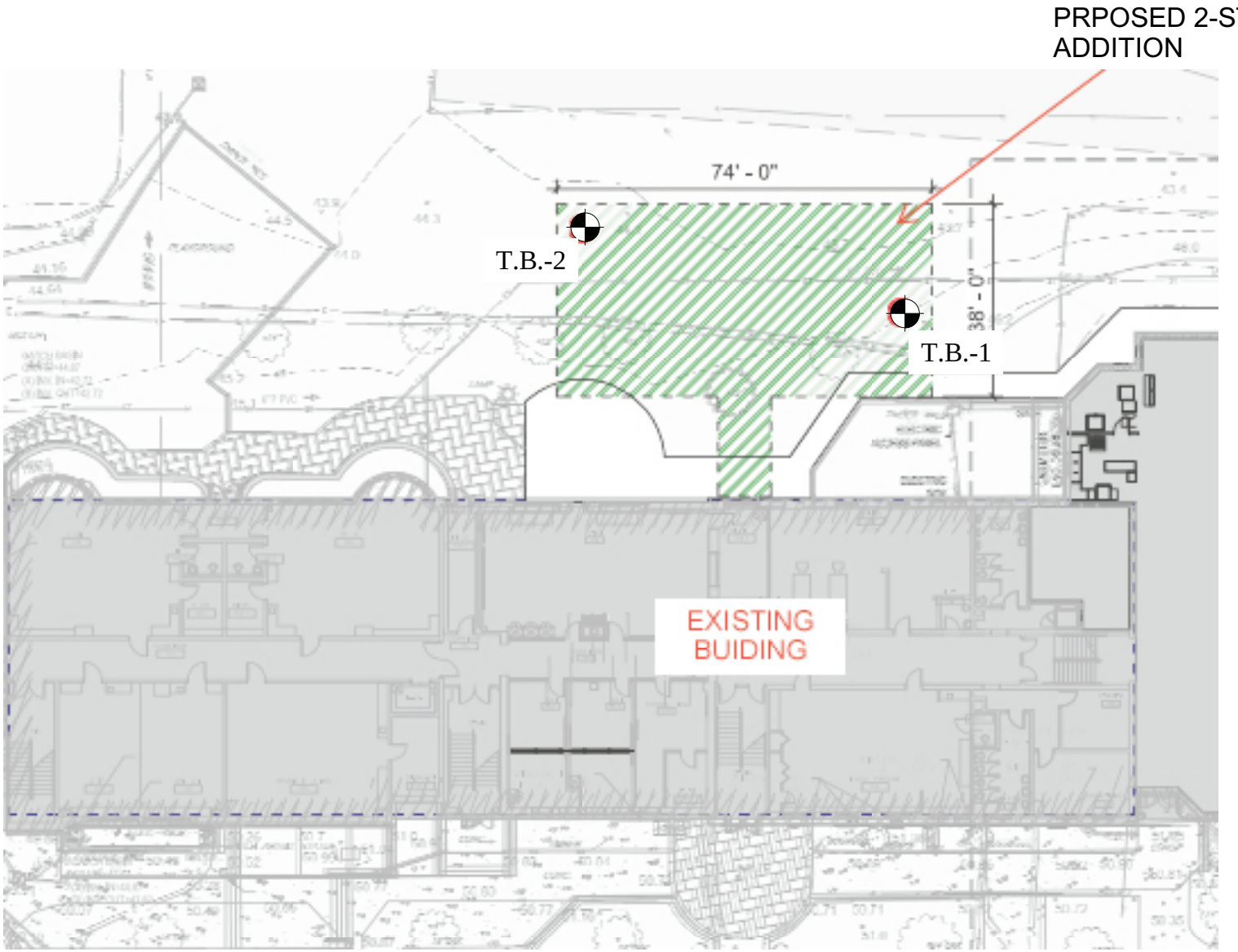

Test Boring Location T.B.-

LAN Associates		Boring Location Plan			PROPOSED 2-STORY ADDITION TATEM ELEMENTARY SCHOOL 1 GLOVER AVENUE BOROUGH OF HADDONFIELD, CAMDEN CO., NEW JERSEY
Underwood Engineering Company	Scale: N.T.S.	Date: July 6, 2026	UE Ref. No.: 5583-20393-1	D - 1	

Appendix B
Boring Logs

CLIENT: LAN Associates

PROJECT: Tatem ES Addition & Alteration
1 Glover Avenue, Haddonfield
Haddonfield, NJ

DATE: 06/22/2026

BORING No.: TB-1

UNDERWOOD ENGINEERING COMPANY
1 Keystone Avenue, Suite 300, Cherry Hill, NJ 08003
Ph.# 856.933.1818
Patrick M. Underwood, President

GROUND SURFACE ELEVATION: NA

GROUNDWATER DATA	
DEPTH	Hours After Completion
13 ft	Sample Saturated with Water

METHOD OF ADVANCING BORING	DEPTH (FT.)
CONTINUOUS SPLIT SPOON SAMPLE	0' to 10'
AUGERS	10' to 30'
2" O.D. SPLIT SPOON	33' to 35'

Depth (ft)	Groundwater	Sampling Interval	Sample #	Blows	N-Values	Lithology	Soil Description*	Notes:
0			S-1	2-6-10-10			Sand: Dark Brown c.f SAND, (l) Silt with Grass on Top	
			S-2	4-4-3-3			Sand: Dark Greyish Brown c.f SAND, (l) Silt, (l) Clay, (tr) f Gravel	
5			S-3	2-2-2-2			Sand: Dark Brown c.f SAND, (l) Silt, (tr) Clay	
			S-4	2-3-2-2			Sand: Dark Yellowish Brown c.f SAND, (l) Silt, (tr) Clay	
10			S-5	2-3-4-5			Sand: Dark Yellowish Brown c.f SAND, (l) Silt, (l) Clay	G.W. Encountered at 13ft
	▼						Sand: Dark Yellowish Brown c.f SAND, (l) Silt, (tr) Clay (wet)	
15			S-6	3-2-3-3			Sand: Dark Greyish Brown c.f SAND, (l) Silt, (tr) Clay	
20			S-7	3-4-6-6			Sand: Dark Yellowish Brown c.f SAND, (l) Silt, (l) Clay (wet)	
25			S-8	6-2-1-1				
30			S-9	6-4-4-5			Sand: Dark Grey to Yellowish Brown c.f SAND, (a) Clay, (l) Silt	
35			S-10	3-4-6-7				

*FIELD CLASSIFICATION ONLY. SOIL CLASSIFICATION FOR PARTICULAR USES SHOULD BE ASCERTAINED BY LABORATORY TESTS.

N - STANDARD PENETRATION RESISTANCE PER 12" (140 lb. HAMMER, 30" DROP)

CLIENT: LAN Associates

PROJECT: Tatem ES Addition & Alteration
1 Glover Avenue, Haddonfield
Haddonfield, NJ

DATE: 06/22/2026

BORING No.: TB-2

UNDERWOOD ENGINEERING COMPANY
1 Keystone Avenue, Suite 300, Cherry Hill, NJ 08003
Ph.# 856.933.1818
Patrick M. Underwood, President

GROUND SURFACE ELEVATION: NA

GROUNDWATER DATA	
DEPTH	Hours After Completion
13 ft	Sample Saturated with Water

METHOD OF ADVANCING BORING	DEPTH (FT.)
CONTINUOUS SPLIT SPOON SAMPLE	0' to 10'
AUGERS	10' to 30'
2" O.D. SPLIT SPOON	33' to 35'

Depth (ft)	Groundwater	Sampling Interval	Sample #	Blows	N-Values	Lithology	Soil Description*	Notes:
0			S-1	8-8-6-7			Sand: Dark Brown c.f SAND, (l) Silt with Grass on Top	
			S-2	8-9-9-8			Sand: Dark Brown c.f SAND, (l) Silt, (l) Clay	
5			S-3	4-5-5-5			Sand: Olive Brown c.f SAND, (l) Silt	
			S-4	5-4-5-4			Sand: Reddish Brown c.f SAND, (l) Silt	
10			S-5	3-2-2-2			Sand: Strong Brown c.f SAND, (l) Silt, (tr) Clay	
	▼						Sand: Dark Greyish Brown c.f SAND, (s-a) Clay, (l) f Gravel, (l) Silt	G.W. Encountered at 13ft
15			S-6	3-3-4-4			Sand: Strong Brown c.f SAND, (l) Clay, (l) Silt, (tr) f Gravel	
20			S-7	8-9-10-13			Sand: Dark Grey m.f SAND, (s-a) Clay, (l) Silt	
25			S-8	1-2-2-1			Sand: Dark Grey m.f SAND, (a) Clay, (l) Silt with Weathered Mica	
30			S-9	3-3-5-5				
35			S-10	5-5-8-11				

*FIELD CLASSIFICATION ONLY. SOIL CLASSIFICATION FOR PARTICULAR USES SHOULD BE ASCERTAINED BY LABORATORY TESTS.

N - STANDARD PENETRATION RESISTANCE PER 12" (140 lb. HAMMER, 30" DROP)

Appendix C
Mechanical Sieve (Gradation) Analysis Results

Underwood Engineering, Inc.
1 Keystone Ave, Suite 300
Cherry Hill, New Jersey 08003
(856) 933-1818
Mailing: PO Box 3520, Cherry Hill, NJ 08034

Material Test Report

Report No: MAT:26-4814-S01
Issue No: 1

Client: LAN Associates **CC:**

Project: Tatem ES Additions & Alterations
1 Glover Avenue, Haddonfield, NJ 08033

This report is based on the visual and physical inspection described below. The inspections, laboratory tests and subsequent results are based on a representative sample of the overall project. Inspection by Underwood Engineering, Inc. in no way releases the contractor or sub-contractor of full responsibility of meeting contract documents, plans, specifications, shop drawings and standard in the industry . No other warranty is expressed or implied. No conclusions should be drawn from this report other than those specifically stated.

AASHTO ACCREDITED

Submitted By: Caitlynn M. Brevik
Date of Issue: 6/24/2026

Sample Details

Sample ID	26-4814-S01
Date Sampled	6/22/2026
Source	Soil Boring
Material	c.f. SAND, (l) Silt and Clay, (tr) f. Gravel
Specification	I-5 plus No. 100 Sieve
Location	TB-1 at 8ft to 10ft

Other Test Results

Description	Method	Result	Limits
Water Content (%)	ASTM D 2216	7.6	
Method		B	
Tested By		Caitlynn M. Brevik	
Date Tested		6/24/2026	

Particle Size Distribution

Method: AASHTO T 27, AASHTO T 11

Date Tested:
Tested By:

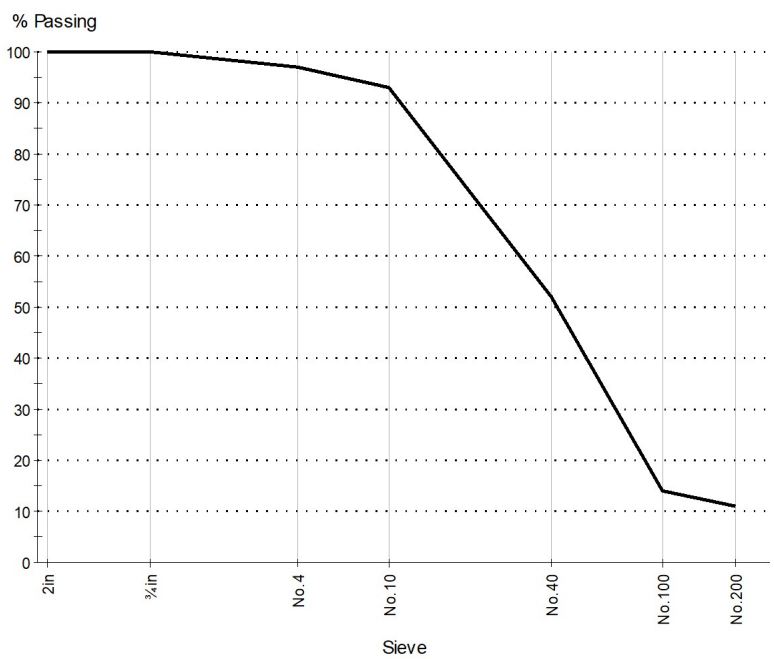

Sieve Size	% Passing	Limits
2in	100	
¾in	100	
No.4	97	
No.10	93	
No.40	52	
No.100	14	
No.200	11	

Comments

c.f. SAND, (l) Silt and Clay, (tr) f. Gravel

© 2000-2026 QESTLab by SpectraQEST.com

Underwood Engineering, Inc.
1 Keystone Ave, Suite 300
Cherry Hill, New Jersey 08003
(856) 933-1818
Mailing: PO Box 3520, Cherry Hill, NJ 08034

Material Test Report

Report No: MAT:26-4814-S02
Issue No: 1

Client: LAN Associates **CC:**

Project: Tatem ES Additions & Alterations
1 Glover Avenue, Haddonfield, NJ 08033

This report is based on the visual and physical inspection described below. The inspections, laboratory tests and subsequent results are based on a representative sample of the overall project. Inspection by Underwood Engineering, Inc. in no way releases the contractor or sub-contractor of full responsibility of meeting contract documents, plans, specifications, shop drawings and standard in the industry . No other warranty is expressed or implied. No conclusions should be drawn from this report other than those specifically stated.

AASHTO ACCREDITED

Submitted By: Caitlynn M. Brevik
Date of Issue: 6/24/2026

Sample Details

Sample ID	26-4814-S02
Date Sampled	6/22/2026
Source	Soil Boring
Material	c.f. SAND, (tr) Silt and Clay, (tr) f. Gravel
Specification	I-5 plus No. 100 Sieve
Location	TB-2 at 6ft to 8ft

Other Test Results

Description	Method	Result	Limits
Water Content (%)	ASTM D 2216	7.5	
Method		B	
Tested By		Caitlynn M. Brevik	
Date Tested		6/24/2026	

Particle Size Distribution

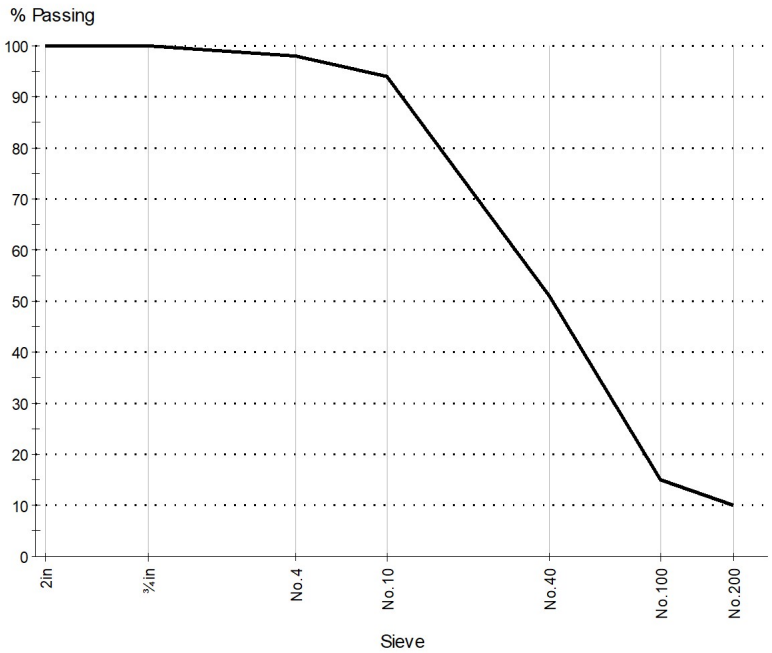

Method: AASHTO T 27, AASHTO T 11

Date Tested:
Tested By:

Sieve Size	% Passing	Limits
2in	100	
¾in	100	
No.4	98	
No.10	94	
No.40	51	
No.100	15	
No.200	9.9	

Comments

c.f. SAND, (tr) Silt and Clay, (tr) f. Gravel

© 2000-2026 QESTLab by SpectraQEST.com

Appendix D
General Soil Terms

General Soil Terms

Particle Sizes

Boulders	Greater than 2 inches (305mm)
Cobbles	3 inches (76.233) to 12 inches (305mm)
Gravel-coarse	3/4 inches (19.05mm) to 3 inches (76.2mm)
Gravel-fine	No. 4- 3/16 inches (4 75mm) to 3/4 inches (19.05mm)
Sand-coarse	No. 10 (2.00mm) to No. 4 (4 75mm)
Sand-medium	No. 40 (0.425mm) to No. 10 (2.00.)
Sand-fine	No. 200 (0.075mm) to No. 40 (0.425mm)
Silt	0.005mm to 0.074mm
Clay	Less than 0.005mm

Classifications

The major soil constituent is the principal noun, i.e. clay, silt, sand, gravel. The second major soil constituent and other minor constituents are reported as follows:

Second Major Constituent-Minor Constituents
(Percentage by weight)

Trace – 1 to 12%	Trace – 1 to 12%
Adjective – 12 to 35% (clayey, silty, etc.)	Little – 12 to 23
	Some – 23 to 33%
	And – Over 35%

Cohesive Soils

If clay content is sufficient so that clay dominates soil properties, clay becomes the principal noun with other major soil constituent as modifier: i.e. silty clay. Other minor soil constituents may be included in accordance with the classification breakdown for cohesionless soils: i.e. silty clay, trace of sand, little gravel

Consistency	Unconfined Compressive Strength (psf)	Approximate Range of (N)
Very Soft	Below 500	0-2
Soft	500-1000	3-4
Medium	1000-2000	5-8
Stiff	2000-4000	9-15
Very Stiff	4000-8000	16-30
Hard	8000-16000	31-50
Very Hard	Over 16000	Over 50

Consistency of cohesive soils is bases upon an evaluation of the observed resistance to deformation under load and not upon Standard Penetration Resistance (N)

Cohesionless Soils

Density Classification	Relative Density	Approximate Range of (N)
Very Loose	0-15	0-4
Loose	16-35	5-10
Medium Compact	36-65	11-30
Compact	66-85	31-50
Very Compact	86-100	Over 50

Relative Density of Cohesionless Soils is based upon the evaluation of the Standard Penetration Resistance (N), modified as required for depth effects, sampling effects, etc.

Standard Penetration Test (ASTM D 1586) – A 2.0” outside-diameter split barrel sampler is driven into undisturbed soil by means of a 140-pound weight falling freely through a vertical distance of 30 inches. The sampler is normally driven three successive 6-inch increments. The total number of blows required for the final 12 inches of penetration is the Standard Penetration Resistance (N).

Appendix E

Important Information about Your Geotechnical Engineering Report-ASFE

GEOTECHNICAL SERVICES ARE PERFORMED FOR SPECIFIC PURPOSES, PERSONS, AND PROJECTS

#

Geotechnical engineers structure their services to meet the specific needs of their clients. A geotechnical engineering study conducted for a civil engineer may not fulfill the needs of a construction contractor or even another civil engineer. Because each geotechnical engineering study is unique, each geotechnical engineering report is unique, prepared solely to the client. No one except you should rely on your geotechnical engineering report without first conferring with the GEOTECHNICAL engineer who prepared it. And no one-not even you should apply the report for any purpose or project except the one originally contemplated.

A GEOTECHNICAL ENGINEERING REPORT IS BASES ON A UNIQUE SET OF PROJECT-SPECIFIC FACTORS

Geotechnical engineers consider a number of unique, project-specific factors when establishing the scope of a study. Typical factors include: the client's goals, objectives, and risk management preferences: the general nature of the structure involved, its size, and configuration: the location of the structure on the site: and the other planned or existing site improvements, such as access roads, parking lots, and underground utilities. Unless the geotechnical engineer who conducted the study specifically indicates otherwise, do not rely on geotechnical engineering report that was:
*not prepared for you,
*not prepared for your project,
*not prepared for the specific site explored, or
*completed before important project changes were made

Typical changes that can erode the reliability of an existing geotechnical engineering report include those that affect:
*the function of the proposed structure, as when its changed from a parking garage to an office
building, or from a light industrial plant to a refrigerated warehouse
*elevation, configuration, location, orientation, or weight off the proposed structure,
*composition of the design team, or
*project ownership

As general rule, always inform your geotechnical engineer of project changes—even minor ones—and request an assessment of their impact. Geotechnical engineers cannot accept responsibility or liability for problems that occur because their reports do not consider developments of which they were not informed.

SUBSURFACE CONDITIONS CAN CHANGE

A geotechnical engineering report is bases on conditions that existed at the time the study was performed. Do not rely on a geotechnical engineering report whose adequacy may have been affected by: the passage of time; by man-made events, such as construction on or adjacent to the site; or by natural events, such as floods earthquakes, or groundwater fluctuations. Always contact the geotechnical engineer before applying the report to determine if it is still reliable. A minor amount of additional testing or analysis could prevent major problems.

MOST GEOTECHNICAL FINDINGS ARE PROFESSIONAL OPINIONS

Site exploration identifies subsurface conditions only at those points where subsurface tests are conducted or samples are taken. Geotechnical engineers review field and laboratory data and then apply their professional judgment to render and opinion about subsurface conditions throughout the site. Actual subsurface conditions may differ—sometimes significantly—from those indicated in your report. Retaining the geotechnical engineer who developed your report to provide construction observation is the most effective method of managing the risks associated with unanticipated conditions.

A REPORT'S RECOMMENDATIONS ARE NOT FINAL

Do not over rely on the construction recommendations included in your report. Those recommendations are not final, because geotechnical engineers develop them principally from judgment and opinion. Geotechnical engineers can finalize their recommendations only by observing actual conditions revealed during construction. The geotechnical engineer who developed your report cannot assume responsibility or liability for the report's recommendations if that engineer does not perform construction observation.

A GEOTECHNICAL ENGINEERING REPORT IS SUBJECT TO MISINTERPRETATION

Other design team members' misinterpretation of geotechnical engineering reports has resulted in costly problems. Lower that risk by having your geotechnical engineer confer with appropriate members of the design team after submitting the report. Also retain your geotechnical engineer review pertinent elements of the design team's plans and specifications. Contractors can also misinterpret a geotechnical engineering report. Reduce that risk by having your geotechnical engineer participate in prebid and preconstruction conferences, and by providing construction observation.

DO NOT REDRAW THE ENGINEERR'S LOGS

Geotechnical engineers prepare final boring and testing logs based upon their interpretation of field logs laboratory data. To prevent errors or omissions, the logs included in a geotechnical engineering report should never be redrawn for inclusion in architectural or other design drawings. Only photographic or electronic reproduction is acceptable, but recognize that separating logs from the report can elevate risk.

GIVE CONTRACTORS A COMPLETE REPORT AND GUIDANCE

#

Some owners and design professionals mistakenly believe they can make contractors liable for unanticipated subsurface conditions by limiting what they provide for bid preparation. To help prevent costly problems, give contractors the complete geotechnical engineering report, but preface it with a clearly written letter of transmittal. In that letter, advise contractors that the report was not prepared for purposes of bid development and that the report's accuracy is limited; encourage them to confer with the geotechnical engineer who prepared the report (a modest fee may be required) and/or to conduct additional study to obtain the specific types of information they need or prefer.

A prebid conference can also be valuable. Be sure contractors have sufficient time to perform additional studies. Only then might you be in a position to give contractors the best information available to you, while requiring them to at least share some of the financial responsibilities stemming from unanticipated conditions.
#

READ RESPONSIBILITY PROVISIONS CLOSELY

#

Some clients, design professionals, and contractors do no recognize that geotechnical engineering is far less exact than other engineering disciplines. This lack of understanding has created unrealistic expectations that have led to disappointments, claims, and disputes. To help reduce such risks, geotechnical engineers commonly include a variety of explanatory provisions in their reports. Sometimes labeled “limitations”, many of these provisions indicate where geotechnical engineers responsibilities begin and end, to help others recognize their own responsibilities and risks. Read these provisions closely. Ask questions. Your geotechnical engineer should respond fully and frankly.

GEOENVIRONMENTAL CONCERNS ARE NOT CONVERED

The equipment, techniques and personnel used to perform a geoenvironmental study differ significantly from those used to perform a geotechnical study. For that reason, a geotechnical engineering report does not usually relate any geoenvironmental findings, conclusions, or recommendations; e.g., about the likelihood of encountering underground storage tanks or regulated contaminants. Unanticipated environmental problems have led to numerous project failures. If you have not yet obtained your own geoenvironmental information, ask your geotechnical consultant for risk management guidance. Do not rely on an environmental report prepared for someone else.

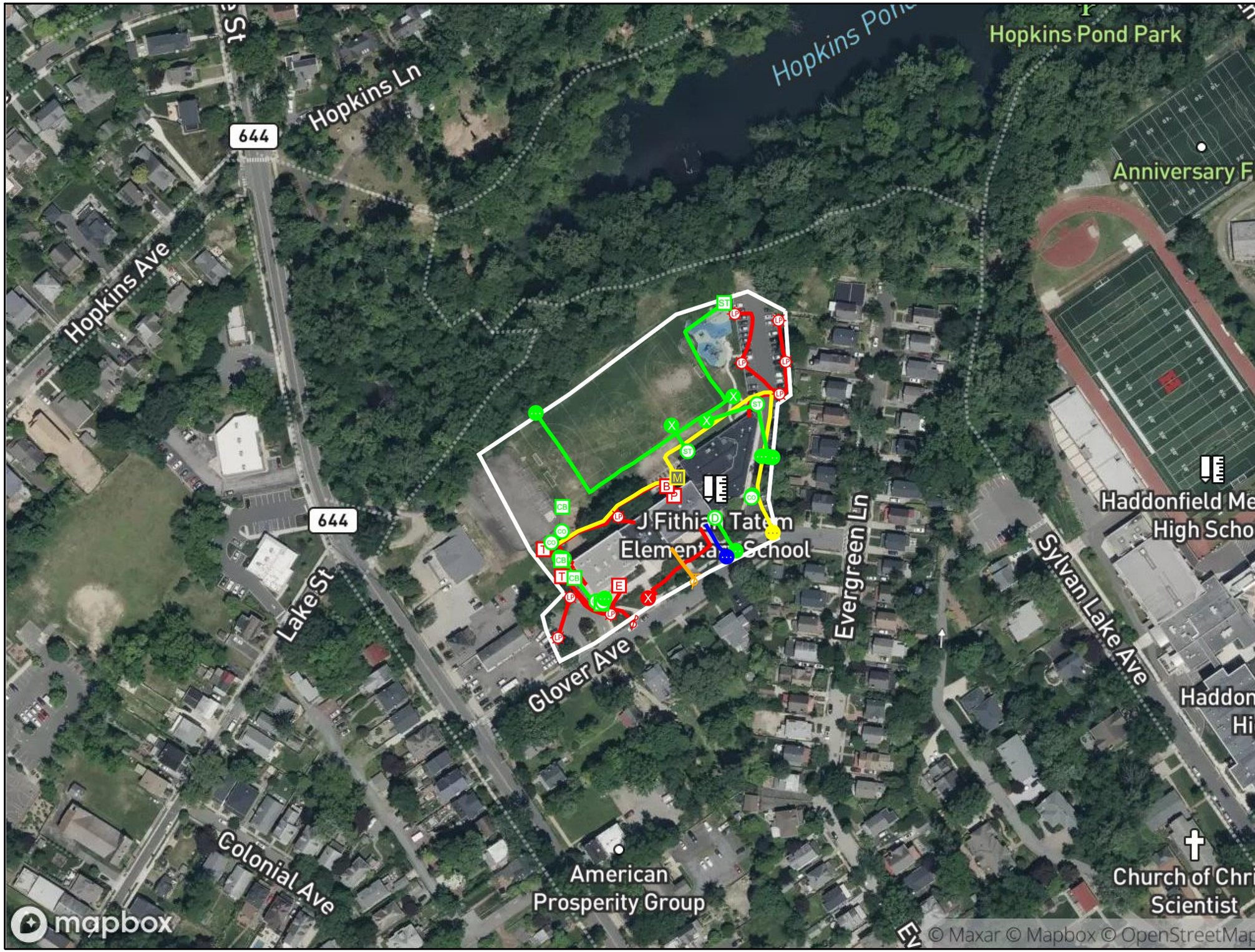

GPRS

MAP NOTES

1. SATELLITE IMAGERY IS OFTEN SHIFTED AND MAY NOT LINE UP WITH LINE AND POINT FEATURES COLLECTED. GPRS USES RTK WHEN POSSIBLE TO CORRECT GPS DATA WITH THE HIGHEST LEVEL OF ACCURACY. MARKINGS IN THE FIELD PROVIDE THE MOST ACCURATE LOCATIONS AND THIS MAP IS TO BE USED ONLY AS A REFERENCE. DO NOT DIG, EXCAVATE, ETC BASED SOLELY ON THIS MAP.
2. THIS MAP REPRESENTS GPRS' FINDINGS FROM THE DISPLAYED WORK ORDER NUMBER. FOR A LIST OF ALL LIMITATIONS AND EXPLANATIONS FROM THIS JOB, PLEASE CONSULT THE "JOB SUMMARY REPORT" OR OTHER DOCUMENTS THAT MAY HAVE BEEN PRODUCED FOR EACH JOB AND ARE SUBJECT TO THESE TERMS: https://gp-radar.com/terms-conditions

LEGEND

- ELECTRICAL
- FUEL/GAS/OIL
- STORM
- TELECOMM
- WATER
- SCAN LIMIT

0' 75' 150' 225' 300'

GPRS UTILITY FINDINGS MAP (NOT SURVEY GRADE)

PREPARED FOR:
LAN ASSOCIATES INC- VOORHEES NJ

LOCATION:
1 GLOVER AVENUE
1 GLOVER AVENUE
HADDONFIELD, NJ

PROJECT MANAGER:
COLE CAREY
COLE.CAREY@GPRSINC.COM

DATE	2025 NOV 05		
DRAWING NO.	1	REV.	0

WO# 843631

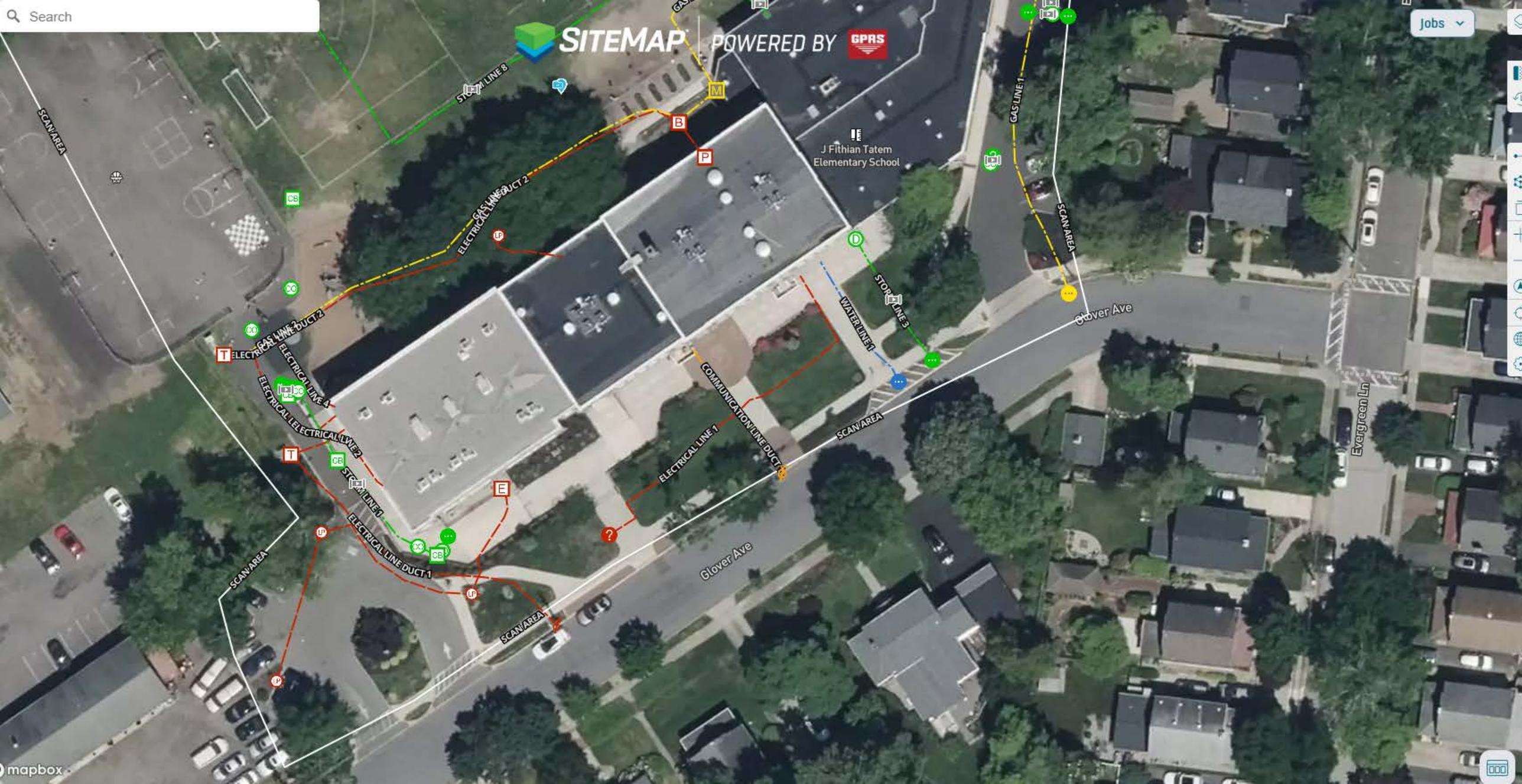
Search
SITEMAP
POWERED BY
GPRS
Jobs
J Fithian Tatem
Elementary School
Glover Ave
Evergreen Ln
SCAN AREA
STORM LINE 8
GAS LINE 1
GAS LINE 2
ELECTRICAL LINE DUCT 2
ELECTRICAL LINE 4
ELECTRICAL LINE 2
STORM LINE 1
ELECTRICAL LINE DUCT 1
ELECTRICAL LINE 1
COMMUNICATION LINE DUCT
WATER LINE 1
STORM LINE 3
mapbox

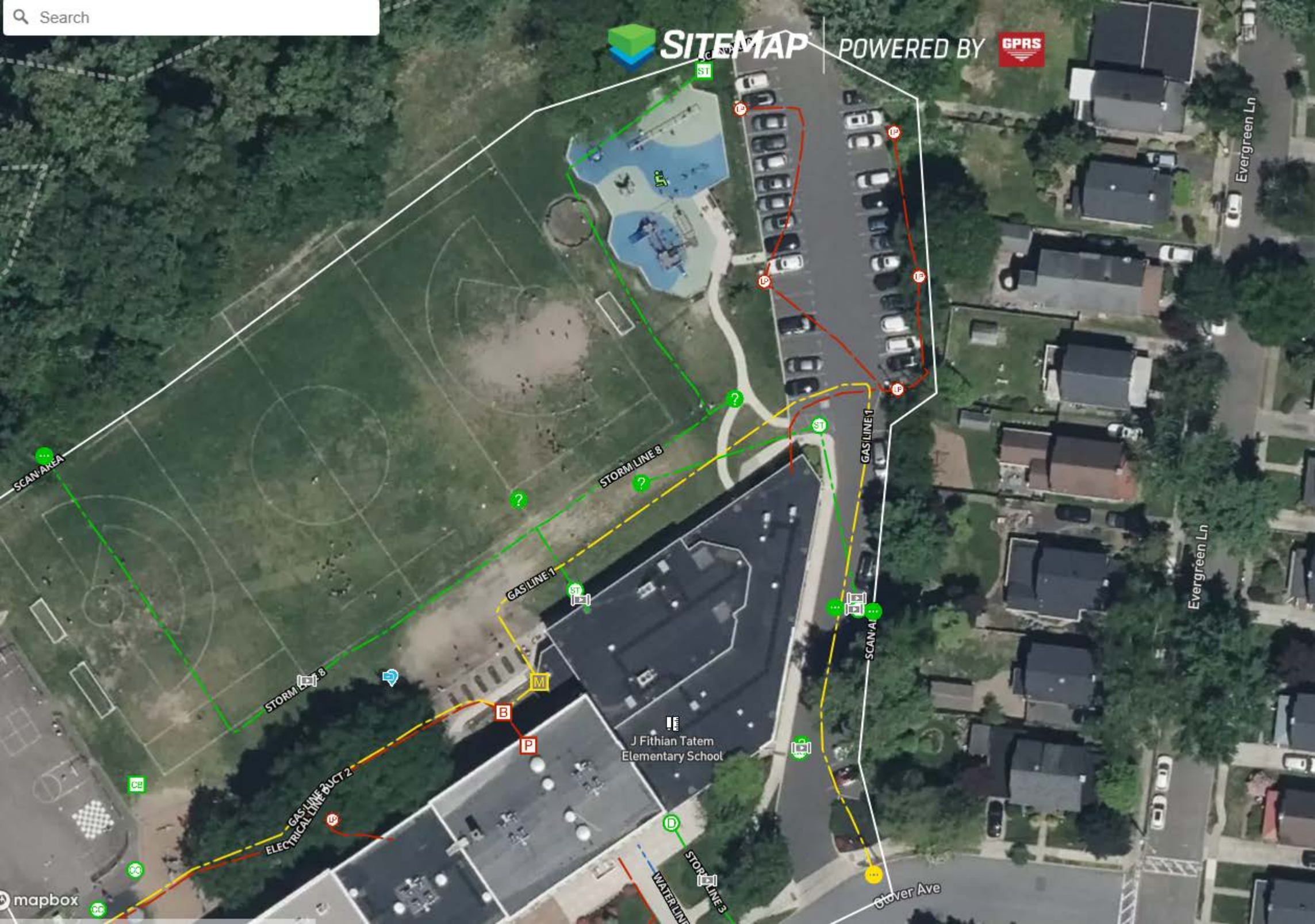
Search
SITEMAP
POWERED BY
GPRS
SCAN AREA
STORM LINE 8
GAS LINE 1
GAS LINE 1
STORM LINE 8
GAS LINE 1
SCAN AREA
J Fithian Tatem
Elementary School
GAS LINE 1
ELECTRICAL LINE 1
DUCT 2
WATER LINE
STORM LINE 3
Evergreen Ln
Evergreen Ln
Glover Ave
mapbox

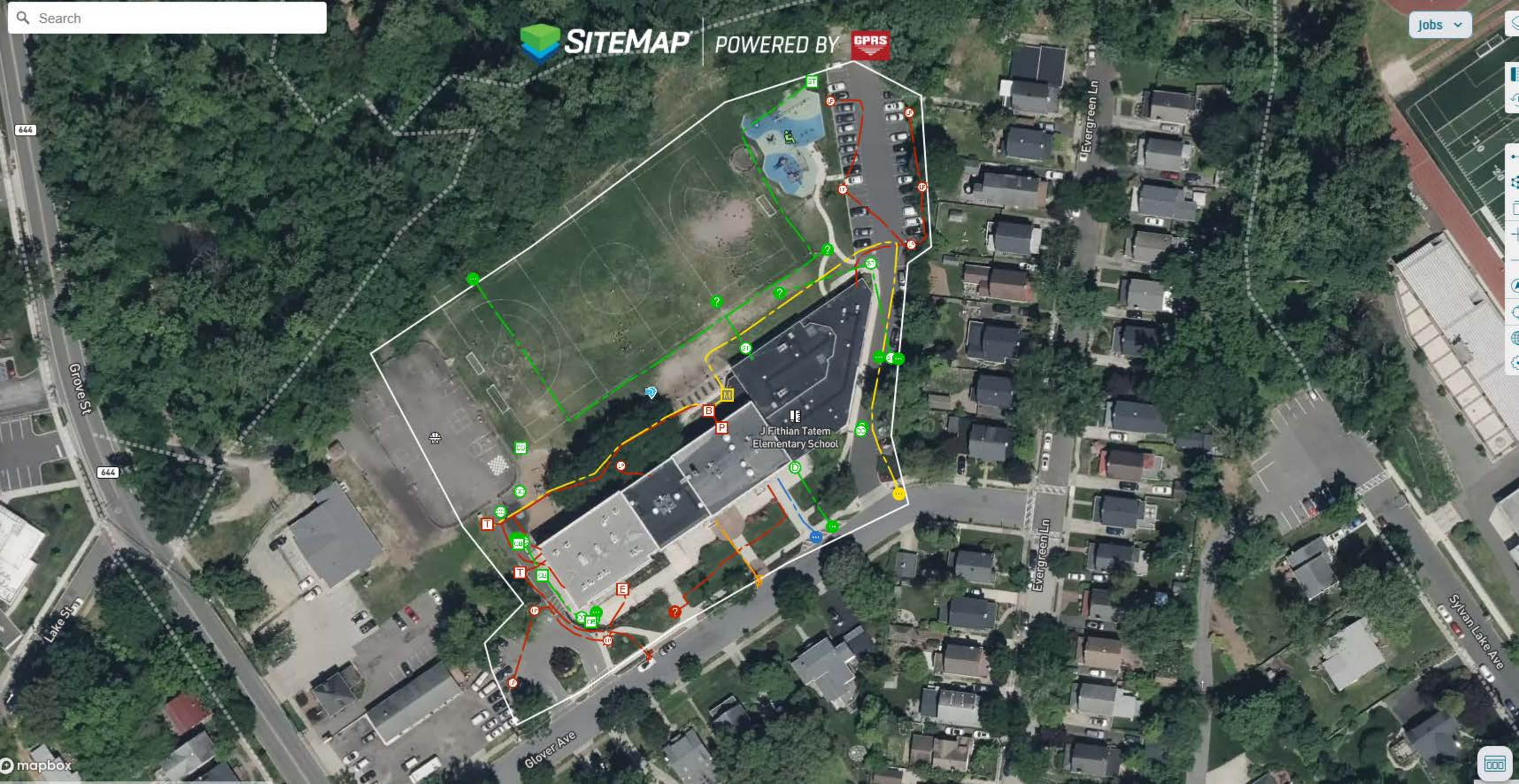
Search
SITEMAP
POWERED BY
GPRS
Jobs
644
Grove St
Lake St
Glover Ave
Evergreen Ln
Evergreen Ln
Sylvan Lake Ave
J Fithian Tatem
Elementary School
mapbox

SECTION 024119 - SELECTIVE DEMOLITION

PART 1 - GENERAL

1.1 SUMMARY

A. The Work of this Section Includes:

1. Demolition and removal of selected portions of exterior or interior of building or structure and site elements.
2. Removal and salvage of existing items for delivery to Owner and removal of existing items for reinstallation.

B. Related Requirements:

1. Section 011000 "Summary" for restrictions on use of the premises, Owner-occupancy requirements, and phasing requirements.
2. Section 017300 "Execution" for cutting and patching procedures.

1.2 DEFINITIONS

A. Remove: Detach items from existing construction and legally dispose of off-site unless indicated to be removed and salvaged or removed and reinstalled.

B. Remove and Salvage: Detach items from existing construction, in a manner to prevent damage, and deliver to Owner as indicated.

C. Remove and Reinstall: Detach items from existing construction, in a manner to prevent damage; prepare for reuse; and reinstall where indicated.

D. Existing to Remain: Existing items of construction that are not to be removed.

1.3 MATERIALS OWNERSHIP

A. Unless otherwise indicated, demolition waste becomes property of Contractor.

1.4 COORDINATION

A. Arrange selective demolition schedule so as not to interfere with Owner's operations.

B. Coordinate selective demolition work with Section 015000 ‘Temporary Facilities and Controls’ for dust, noise, and vibration control, and with Section 017300 ‘Execution’ for cutting and patching. Provide temporary barriers, enclosures, and negative air measures as required to protect occupied areas and maintain indoor air quality

1.5 INFORMATIONAL SUBMITTALS

A. Proposed Protection Measures: Submit report, including Drawings, that indicates the measures proposed for protecting individuals and property, for dust control. Indicate proposed locations and construction of barriers.

B. Preliminary Table of Contents: Submit a draft table of contents for each required manual within 60 days of Notice to Proceed or prior to rough-in of major systems, whichever occurs first, identifying proposed structure, system groupings, and file naming conventions for review by Architect and Owner prior to full assembly.

1.6 CLOSEOUT SUBMITTALS

A. Inventory: Submit a list of items that have been removed and salvaged.

1.7 FIELD CONDITIONS

A. Owner will occupy portions of building immediately adjacent to selective demolition area. Conduct selective demolition so Owner's operations will not be disrupted.

B. Conditions existing at time of inspection for bidding purpose will be maintained by Owner as far as practical.

1. Before selective demolition, Owner will remove the following items:

a. Loose furniture.

C. Notify Architect of discrepancies between existing conditions and Drawings before proceeding with selective demolition.

D. Hazardous Materials:

1. It is not expected that hazardous materials will be encountered in the Work.

a. Hazardous materials will be removed by Owner before start of the Work.
b. Prior to start of demolition, verify and document completion of Owner’s hazardous-materials abatement in affected areas. Do not commence work until written clearance documentation has been received and filed on site.
c. If materials suspected of containing hazardous materials are encountered, do not disturb; immediately notify Architect and Owner. Hazardous materials will be removed by Owner under a separate contract.

PART 2 - PRODUCTS

2.1 PERFORMANCE REQUIREMENTS

A. Regulatory Requirements: Comply with governing EPA notification regulations before beginning selective demolition. Comply with hauling and disposal regulations of authorities having jurisdiction.

B. Standards: Comply with ANSI/ASSP A10.6 and NFPA 241.

C. Sustainable Design Requirements for Building Reuse:

1. Maintain the existing building structure, envelope, and interior nonstructural elements of an abandoned or blighted building. Do not demolish such existing construction beyond indicated limits.
2. Maintain the existing building structural systems where indicated to remain. Do not demolish such existing construction beyond indicated limits.
3. Maintain the existing interior ceilings, interior partitions, and/or demountable walls where indicated to remain. Do not demolish such existing construction beyond indicated limits.

PART 3 - EXECUTION

3.1 UTILITY SERVICES AND BUILDING SYSTEMS

A. Existing Services/Systems to Remain: Maintain utilities and building systems and equipment to remain and protect against damage during selective demolition operations.

1. Maintain fire-protection facilities in service during selective demolition operations.

B. Existing Services/Systems to Be Removed, Relocated, or Abandoned: Locate, identify, disconnect, and seal or cap off utilities and building systems serving areas to be selectively demolished.

1. Owner will arrange to shut off indicated utilities when requested by Contractor.
2. Arrange to shut off utilities with utility companies.
3. If disconnection of utilities and building systems will affect adjacent occupied parts of the building, provide temporary services/systems that bypass area of selective demolition and that maintain continuity of services/systems to those parts of the building.
4. Demolish and remove existing building systems, equipment, and components indicated on Drawings to be removed.

    a. Piping to Be Removed: Remove portion of piping indicated to be removed and cap or plug remaining piping with same or compatible piping material.
    b. Ducts to Be Removed: Remove portion of ducts indicated to be removed and plug remaining ducts with same or compatible ductwork material.
    c. Equipment to Be Removed: Disconnect and cap services and remove equipment and components.

5. Abandon existing building systems, equipment, and components indicated on Drawings to be abandoned in place.

    a. Piping to Be Abandoned in Place: Drain piping and cap or plug piping with same or compatible piping material and leave in place.
    b. Ducts to Be Abandoned in Place: Cap or plug ducts with same or compatible ductwork material and leave in place.

6. Remove and reinstall/salvage existing building systems, equipment, and components indicated on drawings to be removed and reinstalled or removed and salvaged:

    a. Equipment to Be Removed and Reinstalled: Disconnect and cap services and remove, clean, and store equipment and components; when appropriate, reinstall, reconnect, and make equipment operational.
    b. Equipment to Be Removed and Salvaged: Disconnect and cap services and remove equipment and components and deliver to Owner.

END OF SECTION 024119

SECTION 033000 – CAST-IN-PLACE CONCRETE

PART 1 - GENERAL

1.1 SUMMARY

A. Section includes cast-in-place concrete, including formwork, reinforcement, concrete materials, mixture design, placement procedures, and finishes.

B. Related Requirements:

Section 312001 "Earthwork" for drainage fill under slabs-on-grade.

2. Section 321614 “Concrete Site Work” for site (non-structural) concrete work.

3. Section 321613 “Concrete Curbing” for concrete curbing work.

C. Refer to structural engineering drawings for additional specifications.

1.2 ACTION SUBMITTALS

A. Product Data: For each type of product.

Design Mixtures: For each concrete mixture.

C. Steel Reinforcement Shop Drawings: Placing Drawings that detail fabrication, bending, and placement.

1.3 INFORMATIONAL SUBMITTALS

Material certificates.

Material test reports.

Floor surface flatness and levelness measurements indicating compliance with specified tolerances.

1.4 QUALITY ASSURANCE

A. Manufacturer Qualifications: A firm experienced in manufacturing ready-mixed concrete products and that complies with ASTM C 94/C 94M requirements for production facilities and equipment.

Manufacturer certified according to NRMCA's "Certification of Ready Mixed Concrete Production Facilities."

Testing Agency Qualifications: An independent agency, acceptable to authorities having jurisdiction, qualified according to ASTM C 1077 and ASTM E 329 for testing indicated.

1.5 PRECONSTRUCTION TESTING

A. Preconstruction Testing Service: Engage a qualified testing agency to perform preconstruction testing on concrete mixtures.

1.6 FIELD CONDITIONS

A. Cold-Weather Placement: Comply with ACI 306.1.

1. Do not use calcium chloride, salt, or other materials containing antifreeze agents or chemical accelerators unless otherwise specified and approved in mixture designs.

B. Hot-Weather Placement: Comply with ACI 301.

PART 2 - PRODUCTS

CONCRETE, GENERAL

A. ACI Publications: Comply with the following unless modified by requirements in the Contract Documents:
1. ACI 301, "Specifications for Structural Concrete,"
2. ACI 117, "Specifications for Tolerances for Concrete Construction and Materials."

2.2 FORM-FACING MATERIALS

A. Smooth-Formed Finished Concrete: Form-facing panels that provide continuous, true, and smooth concrete surfaces. Furnish in largest practicable sizes to minimize number of joints.

B. Rough-Formed Finished Concrete: Plywood, lumber, metal, or another approved material. Provide lumber dressed on at least two edges and one side for tight fit.

2.3 STEEL REINFORCEMENT

A. Reinforcing Bars: ASTM A 615/A 615M, Grade 60 (Grade 420), deformed.

B. Plain-Steel Welded-Wire Reinforcement: ASTM A 1064/A 1064M, plain, fabricated from as-drawn steel wire into flat sheets.

C. Bar Supports: Bolsters, chairs, spacers, and other devices for spacing, supporting, and fastening reinforcing bars and welded wire reinforcement in place. Manufacture bar supports from steel wire, plastic, or precast concrete according to CRSI's "Manual of Standard Practice.

2.4 CONCRETE MATERIALS

A. Cementitious Material: Use the following cementitious materials, of the same type, brand, and source, throughout Project:
1. Portland Cement: ASTM C 150, Type I/II
2. Fly Ash: ASTM C 618, Class F.

B. Normal-Weight Aggregates: ASTM C 33, graded.
   1. Maximum Coarse-Aggregate Size: 3/4 inch nominal.

C. Water: ASTM C 94/C 94M and potable.

D. Air-Entraining Admixture: ASTM C 260/C 260M.

E. Chemical Admixtures: Certified by manufacturer to be compatible with other admixtures and that do not contribute water-soluble chloride ions exceeding those permitted in hardened concrete. Do not use calcium chloride or admixtures containing calcium chloride.

Water-Reducing Admixture: ASTM C 494/C 494M, Type A.
   2. Retarding Admixture: ASTM C 494/C 494M, Type B.
   3. Water-Reducing and Retarding Admixture: ASTM C 494/C 494M, Type D.
   4. High-Range, Water-Reducing Admixture: ASTM C 494/C 494M, Type F.
   5. High-Range, Water-Reducing and Retarding Admixture: ASTM C 494/C 494M, Type G.
   6. Plasticizing and Retarding Admixture: ASTM C 1017/C 1017M, Type II.

2.5 VAPOR RETARDERS

A. Sheet Vapor Retarder: Polyethylene sheet, ASTM D 4397, not less than 10 mils (0.25 mm) thick.

2.6 CURING MATERIALS

A. Evaporation Retarder: Waterborne, monomolecular film forming, manufactured for application to fresh concrete.

B. Absorptive Cover: AASHTO M 182, Class 2, burlap cloth made from jute or kenaf, weighing approximately 9 oz./sq. yd. (305 g/sq. m) when dry.

C. Moisture-Retaining Cover: ASTM C 171, polyethylene film or white burlap-polyethylene sheet.

D. Water: Potable.

E. Clear, Waterborne, Membrane-Forming Curing Compound: ASTM C 309, Type 1, Class B, dissipating.

2.7 RELATED MATERIALS

A. Expansion- and Isolation-Joint-Filler Strips: ASTM D 1751, asphalt-saturated cellulosic fiber.

2.8 CONCRETE MIXTURES

A. Prepare design mixtures for each type and strength of concrete, proportioned on the basis of laboratory trial mixture or field test data, or both, according to ACI 301.

B. Admixtures: Use admixtures according to manufacturer's written instructions.
   1. Use water-reducing admixture in concrete, as required, for placement and workability.
   2. Use water-reducing and retarding admixture when required by high temperatures, low humidity, or other adverse placement conditions.

3. Use water-reducing admixture in pumped concrete, concrete for heavy-use industrial slabs and parking structure slabs, concrete required to be watertight, and concrete with a water-cementitious materials ratio below 0.50.

C. Proportion normal-weight concrete mixtures as indicated on structural drawings.
1. Air Content: 6 percent, plus or minus 1.5 percent at point of delivery for 3/4-inch nominal maximum aggregate size.
2. Air Content: Do not allow air content of trowel-finished floors to exceed 3 percent.

2.9 FABRICATING REINFORCEMENT

A. Fabricate steel reinforcement according to CRSI's "Manual of Standard Practice."

2.10 CONCRETE MIXING

A. Ready-Mixed Concrete: Measure, batch, mix, and deliver concrete according to ASTM C 94/C 94M and ASTM C 1116/C 1116M, and furnish batch ticket information.
1. When air temperature is between 85 and 90 deg F (30 and 32 deg C), reduce mixing and delivery time from 1-1/2 hours to 75 minutes; when air temperature is above 90 deg F (32 deg C), reduce mixing and delivery time to 60 minutes.

PART 3 - EXECUTION

3.1 FORMWORK

A. Design, erect, shore, brace, and maintain formwork, according to ACI 301, to support vertical, lateral, static, and dynamic loads, and construction loads that might be applied, until structure can support such loads.

B. Construct formwork so concrete members and structures are of size, shape, alignment, elevation, and position indicated, within tolerance limits of ACI 117.

C. Chamfer exterior corners and edges of permanently exposed concrete.

3.2 EMBEDDED ITEMS

A. Place and secure anchorage devices and other embedded items required for adjoining work that is attached to or supported by cast-in-place concrete. Use setting drawings, templates, diagrams, instructions, and directions furnished with items to be embedded.

3.3 VAPOR RETARDERS

A. Sheet Vapor Retarders: Place, protect, and repair sheet vapor retarder according to ASTM E 1643 and manufacturer's written instructions.
1. Lap joints 6 inches (150 mm) and seal with manufacturer's recommended tape.

3.4 STEEL REINFORCEMENT

A. General: Comply with CRSI's "Manual of Standard Practice" for placing reinforcement.
   1. Do not cut or puncture vapor retarder. Repair damage and reseal vapor retarder before placing concrete.

3.5 JOINTS

A. General: Construct joints true to line with faces perpendicular to surface plane of concrete.

B. Construction Joints: Install so strength and appearance of concrete are not impaired, at locations indicated or as approved by Architect.

C. Contraction Joints in Slabs-on-Grade: Form weakened-plane contraction joints, sectioning concrete into areas as indicated. Construct contraction joints for a depth equal to at least one-fourth of concrete thickness as follows:
   1. Sawed Joints: Form contraction joints with power saws equipped with shatterproof abrasive or diamond-rimmed blades. Cut 1/-inch wide joints into concrete when cutting action does not tear, abrade, or otherwise damage surface and before concrete develops random contraction cracks.

D. Isolation Joints in Slabs-on-Grade: After removing formwork, install joint-filler strips at slab junctions with vertical surfaces, such as column pedestals, foundation walls, grade beams, and other locations, as indicated.

3.6 WATERSTOP INSTALLATION

A. Waterstops: Install in construction joints and at other locations indicated, according to manufacturer's written instructions.

3.7 CONCRETE PLACEMENT

A. Before placing concrete, verify that installation of formwork, reinforcement, and embedded items is complete and that required inspections have been performed.

B. Deposit concrete continuously in one layer or in horizontal layers of such thickness that no new concrete will be placed on concrete that has hardened enough to cause seams or planes of weakness. If a section cannot be placed continuously, provide construction joints as indicated. Deposit concrete to avoid segregation.
   1. Consolidate placed concrete with mechanical vibrating equipment according to ACI 301.

C. Cold-Weather Placement: Comply with ACI 306.1.

D. Hot-Weather Placement: Comply with ACI 301.

3.8 FINISHING FORMED SURFACES

A. Rough-Formed Finish: As-cast concrete texture imparted by form-facing material with tie holes and defects repaired and patched. Remove fins and other projections that exceed specified limits on formed-surface irregularities.
   1. Apply to concrete surfaces not exposed to public view.

B. Smooth-Formed Finish: As-cast concrete texture imparted by form-facing material, arranged in an orderly and symmetrical manner with a minimum of seams. Repair and patch tie holes and defects. Remove fins and other projections that exceed specified limits on formed-surface irregularities.
   1. Apply to concrete surfaces exposed to public view, to receive a rubbed finish, to be covered with a coating or covering material applied directly to concrete.

C. Rubbed Finish: Apply the following to smooth-formed finished as-cast concrete where indicated:
   1. Smooth-Rubbed Finish: Not later than one day after form removal, moisten concrete surfaces and rub with carborundum brick or another abrasive until producing a uniform color and texture. Do not apply cement grout other than that created by the rubbing process.
   2. Grout-Cleaned Finish: Wet concrete surfaces and apply grout of a consistency of thick paint to coat surfaces and fill small holes. Mix one part portland cement to one and one-half parts fine sand with a 1:1 mixture of bonding admixture and water. Add white portland cement in amounts determined by trial patches so color of dry grout will match adjacent surfaces. Scrub grout into voids and remove excess grout. When grout whitens, rub surface with clean burlap and keep surface damp by fog spray for at least 36 hours.
   3. Cork-Floated Finish: Wet concrete surfaces and apply a stiff grout. Mix one part portland cement and one part fine sand with a 1:1 mixture of bonding agent and water. Add white portland cement in amounts determined by trial patches so color of dry grout will match adjacent surfaces. Compress grout into voids by grinding surface. In a swirling motion, finish surface with a cork float.

D. Related Unformed Surfaces: At tops of walls, horizontal offsets, and similar unformed surfaces adjacent to formed surfaces, strike off smooth and finish with a texture matching adjacent formed surfaces. Continue final surface treatment of formed surfaces uniformly across adjacent unformed surfaces unless otherwise indicated.

3.9 FINISHING FLOORS AND SLABS

A. General: Comply with ACI 302.1R recommendations for screeding, restraightening, and finishing operations for concrete surfaces. Do not wet concrete surfaces.

B. Scratch Finish: While still plastic, texture concrete surface that has been screeded and bull-floated or darbied. Use stiff brushes, brooms, or rakes to produce a profile amplitude of 1/4 inch (6 mm) in one direction.
   1. Apply scratch finish to surfaces to receive concrete floor toppings and to receive mortar setting beds for bonded cementitious floor finishes.

C. Float Finish: Consolidate surface with power-driven floats or by hand floating if area is small or inaccessible to power driven floats. Restraighten, cut down high spots, and fill low spots. Repeat float passes and restraightening until surface is left with a uniform, smooth, granular texture.
   1. Apply float finish to surfaces to receive trowel finish and to be covered with fluid-applied or sheet waterproofing, built-up or membrane roofing, or sand-bed terrazzo.

D. Trowel Finish: After applying float finish, apply first troweling and consolidate concrete by hand or power-driven trowel. Continue troweling passes and restraighten until surface is free of trowel marks and uniform in texture and appearance. Grind smooth any surface defects that would telegraph through applied coatings or floor coverings.
   1. Apply a trowel finish to surfaces, exposed to view or to be covered with resilient flooring, carpet, ceramic or quarry tile set over a cleavage membrane, paint, or another thin-film-finish coating system.

2. Finish and measure surface so gap at any point between concrete surface and an unleveled, freestanding, 10-ft.- (3.05-m-) long straightedge resting on two high spots and placed anywhere on the surface does not exceed 1/8 inch.

E. Trowel and Fine-Broom Finish: Apply a first trowel finish to surfaces where ceramic or quarry tile is to be installed by either thickset or thin-set method. While concrete is still plastic, slightly scarify surface with a fine broom.
   1. Comply with flatness and levelness tolerances for trowel-finished floor surfaces.

F. Broom Finish: Apply a broom finish to exterior concrete platforms, steps, ramps, and elsewhere as indicated.
   1. Immediately after float finishing, slightly roughen trafficked surface by brooming with fiber-bristle broom perpendicular to main traffic route. Coordinate required final finish with Architect before application.

3.10 CONCRETE PROTECTING AND CURING

A. General: Protect freshly placed concrete from premature drying and excessive cold or hot temperatures. Comply with ACI 306.1 for cold-weather protection and ACI 301 for hot-weather protection during curing.

B. Evaporation Retarder: Apply evaporation retarder to unformed concrete surfaces if hot, dry, or windy conditions cause moisture loss approaching 0.2 lb/sq. ft. x h (1 kg/sq. m x h) before and during finishing operations. Apply according to manufacturer's written instructions after placing, screeding, and bull floating or darbying concrete, but before float finishing.

C. Cure concrete according to ACI 308.1, by one or a combination of the following methods:
   1. Moisture Curing: Keep surfaces continuously moist for not less than seven days.
   2. Moisture-Retaining-Cover Curing: Cover concrete surfaces with moisture-retaining cover for curing concrete, placed in widest practicable width, with sides and ends lapped at least 12 inches (300 mm), and sealed by waterproof tape or adhesive. Cure for not less than seven days. Immediately repair any holes or tears during curing period using cover material and waterproof tape.
   3. Curing Compound: Apply uniformly in continuous operation by power spray or roller according to manufacturer's written instructions. Recoat areas subjected to heavy rainfall within three hours after initial application. Maintain continuity of coating and repair damage during curing period.
      a. Removal: After curing period has elapsed, remove curing compound without damaging concrete surfaces by method recommended by curing compound manufacturer unless manufacturer certifies curing compound does not interfere with bonding of floor covering used on Project.
   4. Curing and Sealing Compound: Apply uniformly to floors and slabs indicated in a continuous operation by power spray or roller according to manufacturer's written instructions. Recoat areas subjected to heavy rainfall within three hours after initial application. Repeat process 24 hours later and apply a second coat. Maintain continuity of coating and repair damage during curing period.

3.11 CONCRETE SURFACE REPAIRS

A. Defective Concrete: Repair and patch defective areas when approved by Architect. Remove and replace concrete that cannot be repaired and patched to Architect's approval.

3.12 FIELD QUALITY CONTROL

A. Testing and Inspecting: Owner will engage a qualified testing and inspecting agency to perform field tests and inspections and prepare test reports.

END OF SECTION 033000

SECTION 042200 - CONCRETE UNIT MASONRY

PART 1 - GENERAL

1.1 SUMMARY

A. Section Includes:

1. Concrete masonry units.
2. Steel reinforcing bars.

B. Refer to structural engineering drawings for additional specifications.

1.2 DEFINITIONS

A. CMU(s): Concrete masonry unit(s).

B. Reinforced Masonry: Masonry containing reinforcing steel in grouted cells.

1.3 ACTION SUBMITTALS

A. Product Data: For each type of product.

B. Shop Drawings: For reinforcing steel. Detail bending, lap lengths, and placement of unit masonry reinforcing bars. Comply with ACI 315.

1.4 INFORMATIONAL SUBMITTALS

A. Material Certificates: For each type and size of product. For masonry units, include data on material properties.

B. Mix Designs: For each type of mortar and grout. Include description of type and proportions of ingredients.

1. Include test reports for mortar mixes required to comply with property specification. Test according to ASTM C 109/C 109M for compressive strength, ASTM C 1506 for water retention, and ASTM C 91/C 91M for air content.
2. Include test reports, according to ASTM C 1019, for grout mixes required to comply with compressive strength requirement.

1.5 QUALITY ASSURANCE

A. Masonry Standard: Comply with TMS 602/ACI 530.1/ASCE 6, except as modified by requirements in the Contract Documents.

1.6 FIELD CONDITIONS

A. Cold-Weather Requirements: Do not use frozen materials or materials mixed or coated with ice or frost. Do not build on frozen substrates. Remove and replace unit masonry damaged by frost or by freezing conditions. Comply with cold-weather construction requirements contained in TMS 602/ACI 530.1/ASCE 6.

B. Hot-Weather Requirements: Comply with hot-weather construction requirements contained in TMS 602/ACI 530.1/ASCE 6.

PART 2 - PRODUCTS

2.1 UNIT MASONRY, GENERAL

A. Masonry Standard: Comply with TMS 602/ACI 530.1/ASCE 6, except as modified by requirements in the Contract Documents.

B. Defective Units: Referenced masonry unit standards may allow a certain percentage of units to contain chips, cracks, or other defects exceeding limits stated. Do not use units where such defects are exposed in the completed Work.

C. Fire-Resistance Ratings: Comply with requirements for fire-resistance-rated assembly designs indicated.

1. Where fire-resistance-rated construction is indicated, units shall be listed and labeled by a qualified testing agency acceptable to authorities having jurisdiction.

2.2 CONCRETE MASONRY UNITS

A. Shapes: Provide shapes with exposed surfaces matching exposed faces of adjacent units unless otherwise indicated.

B. CMUs: ASTM C 90.

1. Unit Compressive Strength: Provide units with minimum average net-area compressive strength of 2800 psi.
2. Density Classification: Normal weight.

2.3 CONCRETE LINTELS

A. Concrete Lintels: ASTM C 1623, matching CMUs in color, texture, and density classification; and with reinforcing bars indicated. Provide lintels with net-area compressive strength not less than that of CMUs.

2.4 MORTAR AND GROUT MATERIALS

A. Portland Cement: ASTM C 150/C 150M, Type I or II, except Type III may be used for cold-weather construction. Provide natural color or white cement as required to produce mortar color indicated.

B. Hydrated Lime: ASTM C 207, Type S.

C. Portland Cement-Lime Mix: Packaged blend of portland cement and hydrated lime containing no other ingredients.

D. Masonry Cement: ASTM C 91/C 91M.

E. Aggregate for Mortar: ASTM C 144.

1. White-Mortar Aggregates: Natural white sand or crushed white stone.
2. Colored-Mortar Aggregates: Natural sand or crushed stone of color necessary to produce required mortar color.

F. Aggregate for Grout: ASTM C 404.

G. Cold-Weather Admixture: Nonchloride, noncorrosive, accelerating admixture complying with ASTM C 494/C 494M, Type C, and recommended by manufacturer for use in masonry mortar of composition indicated.

1. Products: Subject to compliance with requirements, available products that may be incorporated into the Work include, but are not limited to, the following:

a. Euclid Chemical Company (The); Accelguard 80.
b. Grace Construction Products, W. R. Grace & Co. - Conn.; Morset.
c. Sonneborn Products, BASF Aktiengesellschaft; Trimix-NCA.

H. Water: Potable.

2.5 REINFORCEMENT

A. Uncoated-Steel Reinforcing Bars: ASTM A 615/A 615M, Grade 60.

B. Reinforcing Bar Positioners: Wire units designed to fit into mortar bed joints spanning masonry unit cells and to hold reinforcing bars in center of cells. Units are formed from 0.148-inch (3.77-mm) steel wire, hot-dip galvanized after fabrication. Provide units designed for number of bars indicated.

C. Masonry-Joint Reinforcement, General: ASTM A 951/A 951M.

1. Interior Walls: Hot-dip galvanized, carbon steel.
2. Exterior Walls: Hot-dip galvanized carbon steel.
3. Wire Size for Side Rods: 0.148-inch diameter.
4. Wire Size for Cross Rods: 0.148-inch diameter.
5. Spacing of Cross Rods: Not more than 16 inches o.c.
6. Provide in lengths of not less than 10 feet, with prefabricated corner and tee units.

2.6 TIES AND ANCHORS

A. Materials: Provide ties and anchors specified in this article that are made from materials that comply with the following unless otherwise indicated:

1. Hot-Dip Galvanized, Carbon-Steel Wire: ASTM A 82/A 82M, with ASTM A 153/A 153M, Class B-2 coating.
2. Steel Sheet, Galvanized after Fabrication: ASTM A 1008/A 1008M, Commercial Steel, with ASTM A 153/A 153M, Class B coating.

B. Adjustable Anchors for Connecting to Structural Steel Framing: Provide anchors that allow vertical or horizontal adjustment but resist tension and compression forces perpendicular to plane of wall.

1. Anchor Section for Welding to Steel Frame: Crimped 1/4-inch - diameter, hot-dip galvanized-steel wire.
2. Tie Section: Triangular-shaped wire tie made from 0.187-inch - diameter, hot-dip galvanized-steel wire.

2.7 EMBEDDED FLASHING MATERIALS

A. Metal Flashing: Provide metal flashing complying with Section 076200 "Sheet Metal Flashing and Trim" and as follows:

1. Fabricate metal drip edges from stainless steel. Extend at least 3 inches (76 mm) into wall and 1/2 inch (13 mm) out from wall, with outer edge bent down 30 degrees **and hemmed**.
2. Fabricate metal sealant stops from stainless steel. Extend at least 3 inches (76 mm) into wall and out to exterior face of wall. At exterior face of wall, bend metal back on itself for 3/4 inch (19 mm) and down into joint 1/4 inch (6 mm) to form a stop for retaining sealant backer rod.
3. Fabricate metal expansion-joint strips from **stainless steel** to shapes indicated.

B. Flexible Flashing: Use the following unless otherwise indicated:

1. Elastomeric Thermoplastic Flashing: Composite flashing product consisting of a polyester-reinforced ethylene interpolymer alloy.

C. Solder and Sealants for Sheet Metal Flashings: As specified in Section 076200 "Sheet Metal Flashing and Trim."

D. Adhesives, Primers, and Seam Tapes for Flashings: Flashing manufacturer's standard products or products recommended by flashing manufacturer for bonding flashing sheets to each other and to substrates.

2.8 MISCELLANEOUS MASONRY ACCESSORIES

A. Compressible Filler: Premolded filler strips complying with ASTM D 1056, Grade 2A1; compressible up to 35 percent; of width and thickness indicated; formulated from PVC.

B. Preformed Control-Joint Gaskets: Made from PVC, complying with ASTM D 2287, Type PVC-65406 and designed to fit standard sash block and to maintain lateral stability in masonry wall; size and configuration as indicated.

C. Bond-Breaker Strips: Asphalt-saturated felt complying with ASTM D 226/D 226M, Type I (No. 15 asphalt felt).

2.9 MASONRY-CELL FILL

A. Loose-Fill Insulation: Perlite complying with ASTM C 549, Type II (surface treated for water repellency and limited moisture absorption) or Type IV (surface treated for water repellency and to limit dust generation).

B. Lightweight-Aggregate Fill: ASTM C 331/C 331M.

2.10 MORTAR AND GROUT MIXES

A. General: Do not use admixtures, including pigments, air-entraining agents, accelerators, retarders, water-repellent agents, antifreeze compounds, or other admixtures unless otherwise indicated.

1. Do not use calcium chloride in mortar or grout.
2. Use portland cement-lime mortar unless otherwise indicated.
3. Add cold-weather admixture (if used) at same rate for all mortar that will be exposed to view, regardless of weather conditions, to ensure that mortar color is consistent.

B. Preblended, Dry Mortar Mix: Furnish dry mortar ingredients in form of a preblended mix. Measure quantities by weight to ensure accurate proportions, and thoroughly blend ingredients before delivering to Project site.

C. Mortar for Unit Masonry: Comply with ASTM C 270, Property Specification. Provide the following types of mortar for applications stated unless another type is indicated.

1. For masonry below grade or in contact with earth, use Type S.
2. For reinforced masonry, use Type S.
3. For mortar parge coats, use Type S.
4. For exterior, above-grade, load-bearing and nonload-bearing walls and parapet walls; for interior load-bearing walls; for interior nonload-bearing partitions; and for other applications where another type is not indicated, use Type N.

D. Grout for Unit Masonry: Comply with ASTM C 476.

1. Use grout of type indicated or, if not otherwise indicated, of type (fine or coarse) that will comply with TMS 602/ACI 530.1/ASCE 6 for dimensions of grout spaces and pour height.
2. Proportion grout in accordance with ASTM C 476, paragraph 4.2.2 for specified 28-day compressive strength indicated, but not less than 3000 psi.
3. Provide grout with a slump of 8 to 11 inches as measured according to ASTM C 143/C 143M.

PART 3 - EXECUTION

3.1 INSTALLATION, GENERAL

A. Use full-size units without cutting if possible. If cutting is required to provide a continuous pattern or to fit adjoining construction, cut units with motor-driven saws; provide clean, sharp, unchipped edges. Allow units to dry before laying unless wetting of units is specified. Install cut units with cut surfaces and, where possible, cut edges concealed.

3.2 TOLERANCES

A. Dimensions and Locations of Elements:

1. For dimensions in cross section or elevation, do not vary by more than plus 1/2 inch or minus 1/4 inch.
2. For location of elements in plan, do not vary from that indicated by more than plus or minus 1/2 inch.
3. For location of elements in elevation, do not vary from that indicated by more than plus or minus 1/4 inch in a story height or 1/2 inch total.

B. Lines and Levels:

1. For bed joints and top surfaces of bearing walls, do not vary from level by more than 1/4 inch in 10 feet, or 1/2-inch maximum.
2. For conspicuous horizontal lines, such as lintels, sills, parapets, and reveals, do not vary from level by more than 1/8 inch in 10 feet, 1/4 inch in 20 feet, or 1/2-inch maximum.
3. For vertical lines and surfaces, do not vary from plumb by more than 1/4 inch in 10 feet, 3/8 inch in 20 feet, or 1/2-inch maximum.
4. For conspicuous vertical lines, such as external corners, door jambs, reveals, and expansion and control joints, do not vary from plumb by more than 1/8 inch in 10 feet, 1/4 inch in 20 feet, or 1/2-inch maximum.
5. For lines and surfaces, do not vary from straight by more than 1/4 inch in 10 feet, 3/8 inch in 20 feet, or 1/2-inch maximum.

C. Joints:

1. For bed joints, do not vary from thickness indicated by more than plus or minus 1/8 inch, with a maximum thickness limited to 1/2 inch.
2. For head and collar joints, do not vary from thickness indicated by more than plus 3/8 inch or minus 1/4 inch.
3. For exposed head joints, do not vary from thickness indicated by more than plus or minus 1/8 inch.

3.3 LAYING MASONRY WALLS

A. Lay out walls in advance for accurate spacing of surface bond patterns with uniform joint thicknesses and for accurate location of openings, movement-type joints, returns, and offsets. Avoid using less-than-half-size units, particularly at corners, jambs, and, where possible, at other locations.

B. Bond Pattern for Exposed Masonry: Unless otherwise indicated, lay exposed masonry in running bond; do not use units with less-than-nominal 4-inch horizontal face dimensions at corners or jambs.

C. Built-in Work: As construction progresses, build in items specified in this and other Sections. Fill in solidly with masonry around built-in items.

D. Fill space between steel frames and masonry solidly with mortar unless otherwise indicated.

E. Where built-in items are to be embedded in cores of hollow masonry units, place a layer of metal lath, wire mesh, or plastic mesh in the joint below, and rod mortar or grout into core.

F. Fill cores in hollow CMUs with grout 24 inches under bearing plates, beams, lintels, posts, and similar items unless otherwise indicated.

3.4 MORTAR BEDDING AND JOINTING

A. Lay hollow CMUs as follows:

1. Bed face shells in mortar and make head joints of depth equal to bed joints.
2. Bed webs in mortar in all courses of piers, columns, and pilasters.
3. Bed webs in mortar in grouted masonry, including starting course on footings.
4. Fully bed entire units, including areas under cells, at starting course on footings where cells are not grouted.

B. Lay solid CMUs with completely filled bed and head joints; butter ends with sufficient mortar to fill head joints and shove into place. Do not deeply furrow bed joints or slush head joints.

C. Tool exposed joints slightly concave when thumbprint hard, using a jointer larger than joint thickness unless otherwise indicated.

D. Cut joints flush for masonry walls to receive plaster or other direct-applied finishes (other than paint) unless otherwise indicated.

3.5 MASONRY-JOINT REINFORCEMENT

A. General: Install entire length of longitudinal side rods in mortar with a minimum cover of 5/8 inch on exterior side of walls, 1/2 inch elsewhere. Lap reinforcement a minimum of 6 inches.

1. Space reinforcement not more than 16 inches o.c.
2. Space reinforcement not more than 8 inches o.c. in foundation walls and parapet walls.
3. Provide reinforcement not more than 8 inches above and below wall openings and extending 12 inches beyond openings in addition to continuous reinforcement.

B. Interrupt joint reinforcement at control and expansion joints unless otherwise indicated.

C. Provide continuity at wall intersections by using prefabricated T-shaped units.

D. Provide continuity at corners by using prefabricated L-shaped units.

3.6 FLASHING

A. General: Install embedded flashing at ledges and other obstructions to downward flow of water in wall where indicated.

B. Install flashing as follows unless otherwise indicated:

1. Prepare masonry surfaces so they are smooth and free from projections that could puncture flashing. Where flashing is within mortar joint, place through-wall flashing on sloping bed of mortar and cover with mortar. Before covering with mortar, seal penetrations in flashing with adhesive, sealant, or tape **as recommended by flashing manufacturer**.
2. At lintels, extend flashing a minimum of 6 inches (150 mm) into masonry at each end. At heads and sills, extend flashing 6 inches (150 mm) at ends and turn up not less than 2 inches (50 mm) to form end dams.
3. Install metal drip edges beneath flexible flashing at exterior face of wall. Stop flexible flashing 1/2 inch (13 mm) back from outside face of wall, and adhere flexible flashing to top of metal drip edge.
4. Install metal flashing termination beneath flexible flashing at exterior face of wall. Stop flexible flashing 1/2 inch (13 mm) back from outside face of wall, and adhere flexible flashing to top of metal flashing termination.

3.7 REINFORCED UNIT MASONRY INSTALLATION

A. Temporary Formwork and Shores: Construct formwork and shores as needed to support reinforced masonry elements during construction.

1. Construct formwork to provide shape, line, and dimensions of completed masonry as indicated. Make forms sufficiently tight to prevent leakage of mortar and grout. Brace, tie,

and support forms to maintain position and shape during construction and curing of reinforced masonry.

2. Do not remove forms and shores until reinforced masonry members have hardened sufficiently to carry their own weight and that of other loads that may be placed on them during construction.

B. Placing Reinforcement: Comply with requirements in TMS 602/ACI 530.1/ASCE 6.

C. Grouting: Do not place grout until entire height of masonry to be grouted has attained enough strength to resist grout pressure.

1. Comply with requirements in TMS 602/ACI 530.1/ASCE 6 for cleanouts and for grout placement, including minimum grout space and maximum pour height.
2. Limit height of vertical grout pours to not more than 60 inches.

3.8 FIELD QUALITY CONTROL

A. Testing and Inspecting: Owner will engage special inspectors to perform tests and inspections and prepare reports. Allow inspectors access to scaffolding and work areas as needed to perform tests and inspections. Retesting of materials that fail to comply with specified requirements shall be done at Contractor's expense.

B. Inspections: Special inspections according to Level **B** in TMS 402/ACI 530/ASCE 5.

1. Begin masonry construction only after inspectors have verified proportions of site-prepared mortar.
2. Place grout only after inspectors have verified compliance of grout spaces and of grades, sizes, and locations of reinforcement.
3. Place grout only after inspectors have verified proportions of site-prepared grout.

C. Testing Prior to Construction: One set of tests.

D. Testing Frequency: One set of tests for each 5000 sq. ft. of wall area or portion thereof.

E. Concrete Masonry Unit Test: For each type of unit provided, according to ASTM C 140 for compressive strength.

F. Mortar Aggregate Ratio Test (Proportion Specification): For each mix provided, according to ASTM C 780.

G. Mortar Test (Property Specification): For each mix provided, according to ASTM C 780. Test mortar for mortar air content and compressive strength.

H. Grout Test (Compressive Strength): For each mix provided, according to ASTM C 1019.

I. Prism Test: For each type of construction provided, according to ASTM C 1314 at seven days and at 28 days.

3.9 PARGING

A. Parge exterior faces of below-grade masonry walls, where indicated, in two uniform coats to a total thickness of 3/4 inch. Dampen wall before applying first coat, and scarify first coat to ensure full bond to subsequent coat.

B. Use a steel-trowel finish to produce a smooth, flat, dense surface with a maximum surface variation of 1/8 inch per foot. Form a wash at top of parging and a cove at bottom.

C. Damp-cure parging for at least 24 hours and protect parging until cured.

3.10 REPAIRING, POINTING, AND CLEANING

A. In-Progress Cleaning: Clean unit masonry as work progresses by dry brushing to remove mortar fins and smears before tooling joints.

B. Final Cleaning: After mortar is thoroughly set and cured, clean exposed masonry as follows:

1. Test cleaning methods on sample wall panel; leave one-half of panel uncleaned for comparison purposes.
2. Clean concrete masonry by applicable cleaning methods indicated in NCMA TEK 8-4A.

3.11 MASONRY WASTE DISPOSAL

A. Waste Disposal as Fill Material: Dispose of clean masonry waste, including excess or soil-contaminated sand, waste mortar, and broken masonry units, by crushing and mixing with fill material as fill is placed.

1. Do not dispose of masonry waste as fill within 18 inches of finished grade.

B. Masonry Waste Recycling: Return broken CMUs not used as fill to manufacturer for recycling.

C. Excess Masonry Waste: Remove excess clean masonry waste that cannot be used as fill, as described above or recycled, and other masonry waste, and legally dispose of off Owner's property.

END OF SECTION 042200

SECTION 042613 - MASONRY VENEER

PART 1 - GENERAL

1.1 SUMMARY

A. Section Includes:

1. Brick.
2. Ties and anchors.
3. Steel reinforcing bars.
4. Embedded flashing.
5. Accessories.
6. Mortar mixes.

B. Products Installed but not Furnished under This Section:

1. Cast-stone trim in masonry veneer.
2. Steel lintels in masonry veneer.

C. Related Requirements:

1. Section 047200 “Cast Stone Masonry” for cast stone masonry within masonry veneer.
2. Section 071900 "Water Repellents" for water repellents applied to unit masonry assemblies.
3. Section 072100 “Thermal Insulation” for cavity wall insulation.
4. Section 076200 "Sheet Metal Flashing and Trim" for sheet metal flashing and for furnishing manufactured reglets installed in masonry joints.

1.2 DEFINITIONS

A. CMU(s): Concrete masonry unit(s).

1.3 PREINSTALLATION MEETINGS

A. Preinstallation Conference: Conduct conference at Project site.

1.4 ACTION SUBMITTALS

A. Product Data: For each type of product.

B. Shop Drawings: For the following:

1. Masonry Units: Indicate sizes, profiles, coursing, and locations of special shapes.
2. Fabricated Flashing: Detail corner units, end-dam units, and other special applications.
3. Veneer Anchors: Indicate type, wire/pintle diameters, insulation thickness accommodation, minimum 1-inch airspace, and anchor spacing/edge-of-opening patterns.

C. Samples for Verification: For each type and color of the following:

1. Clay face brick in the form of a sample panel to represent the required blend.
2. Special brick shapes.
3. Pigmented mortar. Make Samples using same sand and mortar ingredients to be used on Project.
4. Weep/cavity vents.
5. Cavity drainage material.
6. Accessories embedded in masonry.

1.5 INFORMATIONAL SUBMITTALS

A. List of Materials Used in Constructing Mockups: List generic product names together with manufacturers, manufacturers' product names, model numbers, lot numbers, batch numbers, source of supply, and other information as required to identify materials used. Include mix proportions for mortar and grout and source of aggregates.

1. Submittal is for information only. Receipt of list does not constitute approval of deviations from the Contract Documents unless such deviations are specifically brought to the attention of Architect and approved in writing.

B. Material Certificates: For each type and size of the following:

1. Masonry units.
   a. Include data on material properties and material test reports substantiating compliance with requirements.
   b. For brick, include size-variation data verifying that actual range of sizes falls within specified tolerances.
   c. For exposed brick, include test report for efflorescence in accordance with ASTM C67/C67M.
   d. For surface-coated brick, include test report for durability of surface appearance after 50 cycles of freezing and thawing in accordance with ASTM C67/C67M.
2. Cementitious materials. Include name of manufacturer, brand name, and type.
3. Mortar admixtures.
4. Preblended, dry mortar mixes. Include description of type and proportions of ingredients.
5. Anchors, ties, and metal accessories.
6. Joint reinforcement.

C. Mix Designs: For each type of mortar. Include description of type and proportions of ingredients.

1. Include test reports for mortar mixes required to comply with property specification. Test in accordance with ASTM C109/C109M for compressive strength, ASTM C1506 for water retention, and ASTM C91/C91M for air content.

D. Cold-Weather and Hot-Weather Procedures: Detailed description of methods, materials, and equipment to be used to comply with requirements.

1.6 QUALITY ASSURANCE

A. Sample Panels: Build sample panels to verify selections made under Sample submittals and to demonstrate aesthetic effects. Comply with requirements in Section 014000 "Quality Requirements" for mockups.

1. Build sample panels for typical exterior and interior walls in sizes approximately 60 inches long by 48 inches high by full thickness.
2. Build sample panels facing south.
3. Where masonry is to match existing, build panels adjacent and parallel to existing surface.
4. Clean one-half of exposed faces of panels with masonry cleaner indicated.
5. Protect approved sample panels from the elements with weather-resistant membrane.
6. Approval of sample panels is for color, texture, and blending of masonry units; relationship of mortar and sealant colors to masonry unit colors; tooling of joints; aesthetic qualities of workmanship; and other material and construction qualities specifically approved by Architect in writing.
   a. Approval of sample panels does not constitute approval of deviations from the Contract Documents contained in sample panels unless Architect specifically approves such deviations in writing.

1.7 DELIVERY, STORAGE, AND HANDLING

A. Store masonry units on elevated platforms in a dry location. If units are not stored in an enclosed location, cover tops and sides of stacks with waterproof sheeting, securely tied. If units become wet, do not install until they are dry.

B. Store cementitious materials on elevated platforms, under cover, and in a dry location. Do not use cementitious materials that have become damp.

C. Store aggregates where grading and other required characteristics can be maintained and contamination avoided.

D. Deliver preblended, dry mortar mix in moisture-resistant containers. Store preblended, dry mortar mix in delivery containers on elevated platforms in a dry location or in covered weatherproof dispensing silos.

E. Store masonry accessories, including metal items, to prevent corrosion and accumulation of dirt and oil.

1.8 FIELD CONDITIONS

A. Protection of Masonry: During construction, cover tops of veneer, projections, and sills with waterproof sheeting at end of each day's work. Cover partially completed masonry when construction is not in progress.

1. Extend cover a minimum of 24 inches down face of veneer, and hold cover securely in place.
2. Where one wythe of multiwythe masonry walls is completed in advance of other wythes, secure cover a minimum of 24 inches down face next to unconstructed wythe, and hold cover in place.

B. Stain Prevention: Prevent grout, mortar, and soil from staining the face of masonry. Immediately remove grout, mortar, and soil that come in contact with masonry.

1. Protect base of walls from rain-splashed mud and from mortar splatter by spreading coverings on ground and over wall surface.
2. Protect sills, ledges, and projections from mortar droppings.
3. Protect surfaces of window and door frames, as well as similar products with painted and integral finishes, from mortar droppings.
4. Turn scaffold boards near the wall on edge at the end of each day to prevent rain from splashing mortar and dirt onto completed masonry.

C. Cold-Weather Requirements: Do not use frozen materials or materials mixed or coated with ice or frost. Do not build on frozen substrates. Remove and replace unit masonry damaged by frost or by freezing conditions. Comply with cold-weather construction requirements contained in TMS 602.

1. Cold-Weather Cleaning: Use liquid cleaning methods only when air temperature is 40 deg F and higher and will remain so until masonry has dried, but not less than seven days after completing cleaning.

D. Hot-Weather Requirements: Comply with hot-weather construction requirements contained in TMS 602/ACI 530.1/ASCE 6.

PART 2 - PRODUCTS

2.1 UNIT MASONRY, GENERAL

A. Source Limitations for Masonry Units: Obtain exposed masonry units of a uniform texture and color, or a uniform blend within the ranges accepted for these characteristics, from single source from single manufacturer for each product required.

B. Source Limitations for Mortar Materials: Obtain mortar ingredients of a uniform quality, including color for exposed masonry, from single manufacturer for each cementitious component and from single source or producer for each aggregate.

C. Masonry Standard: Comply with TMS 602, except as modified by requirements in the Contract Documents.

D. Defective Units: Referenced masonry unit standards may allow a certain percentage of units to contain chips, cracks, or other defects exceeding limits stated. Do not use units where such defects will be exposed in the completed Work.

E. Fire-Resistance Ratings: Comply with requirements for fire-resistance-rated assembly designs indicated.

1. Where fire-resistance-rated construction is indicated, use the equivalent thickness method for masonry units in accordance with ACI 216.1 or units are listed by UL or a qualified testing agency acceptable to authorities having jurisdiction.

2.2 BRICK

A. General: Provide shapes indicated and as follows, with exposed surfaces matching finish and color of exposed faces of adjacent units.

1. For ends of sills and caps and for similar applications that would otherwise expose unfinished brick surfaces, provide units without cores or frogs and with exposed surfaces finished.
2. Provide special shapes for applications where stretcher units cannot accommodate special conditions, including those at corners, movement joints, bond beams, sashes, and lintels.
3. Provide special shapes for applications requiring brick of size, form, color, and texture on exposed surfaces that cannot be produced by sawing.
4. Provide special shapes for applications where shapes produced by sawing would result in sawed surfaces being exposed to view.

B. Clay Face Brick:

1. Manufacturers:
   a. Basis of Design: Diener Brick Co. (Contact–Bill Rutherford- 856-858-2000)
   b. Or Approved Equal by:
      1) Bowerston
      2) Palmetto Brick
      3) Glen Gery by Diener Brick

2. Face Brick, ASTM C216:
   a. Size: Modular 3-5/8” x 2-1/4” x 7-5/8”
   b. Color/Blend: As indicated on the Drawings.
   c. ASTM C216, Type FBS, Grade SW.
   d. Mortar:
      1) Basis of Design - Argos Masonry Cement Type N.
         a) Or Approved Equal.
      2) Color: As selected by Architect from full range of manufacturer’s color selection options.
   e. All shape drawings are to be prepared by the contractor. All shapes required are to be produced by the manufacturer. All job site cutting/sawing of shapes must be approved by the architect.
   f. All blending to be done at manufacturing facility.

3. Initial Rate of Absorption: Less than 30 g/30 sq. in. per minute when tested in accordance with ASTM C67/C67M.

4. Efflorescence: Provide brick that has been tested in accordance with ASTM C67/C67M and is rated "not effloresced."

5. Surface Coating: Brick with colors or textures produced by application of coatings withstand 50 cycles of freezing and thawing in accordance with ASTM C67/C67M with no observable difference in the applied finish when viewed from 10 ft. or have a history of successful use in Project's area.

2.3 TIES AND ANCHORS

A. General: Ties and anchors extend at least 1-1/2 inches into veneer but with at least a 5/8-inch cover on outside face.

B. Materials: Provide ties and anchors specified in this article that are made from materials that comply with the following unless otherwise indicated:

1. Hot-Dip Galvanized, Carbon-Steel Wire: ASTM A1064/A1064M, with ASTM A153/A153M, Class B-2 coating.
2. Stainless Steel Wire: ASTM A580/A580M, Type 304.
3. Stainless Steel Sheet: ASTM A240/A240M or ASTM A666, Type 304.
4. Use stainless steel for all exterior veneer anchors/ties and fasteners; hot-dip galvanized permitted only at fully interior, dry conditions.

C. Adjustable Masonry-Veneer Anchors/ Masonry-Joint Reinforcement for Multiwythe Masonry:

1. Manufacturers: Subject to compliance with requirements:
   a. Hohmann & Barnard, Inc.
   b. Wire-Bond.
   c. or approved equal.
2. Adjustable (two-piece) type with continuous horizontal wire (3/16 inch (W2.8)) and separate pintles (3/16 inch (W2.8)) engaging eyelets; provide maximum vertical adjustment of 1-1/4 inches and maximum horizontal play of 1/16 inch. Size ties to extend at least halfway through facing wythe with minimum 1-1/2-inch embedment and ≥ 5/8-inch exterior cover. Provide offset legs/stand-offs sized to maintain specified insulation thickness plus minimum 1-inch clear airspace.
3. Provide anchors that allow vertical adjustment but resist a 100-lbf load in both tension and compression perpendicular to plane of wall without deforming or developing play in excess of 1/16 inch.

2.4 EMBEDDED FLASHING

A. Metal Flashing: Provide metal flashing complying with SMACNA's "Architectural Sheet Metal Manual" and as follows:

1. Stainless Steel: ASTM A240/A240M or ASTM A666, Type 304, 0.016 inch thick.
2. Fabricate continuous flashings in sections 96 inches long minimum, but not exceeding 12 feet. Provide splice plates at joints of formed, smooth metal flashing.
3. Fabricate metal drip edges from stainless steel. Extend at least 3 inches into wall and 1/2 inch out from wall, with outer edge bent down 30 degrees and hemmed.
4. Solder metal items at corners.

B. Flexible Flashing: Use the following unless otherwise indicated:

1. Rubberized-Asphalt Flashing: Composite flashing product consisting of a pliable, adhesive rubberized-asphalt compound, bonded to a high-density, cross-laminated polyethylene film to produce an overall thickness of not less than 0.040 inch.
   a. Manufacturers: Subject to compliance with requirements, undefined:
      1) W.R. Meadows, Inc.
      2) or approved equal.
   b. Accessories: Provide preformed corners, end dams, other special shapes, and seaming materials produced by flashing manufacturer.

C. Application: Unless otherwise indicated, use the following:

1. Where flashing is indicated to receive counterflashing, use metal flashing.

2. Where flashing is indicated to be turned down at or beyond the wall face, use metal flashing.
3. Where flashing is partly exposed and is indicated to terminate at the wall face, use metal flashing with a drip edge.
4. Where flashing is fully concealed, use metal flashing or flexible flashing.

D. Solder and Sealants for Sheet Metal Flashings: As specified in Section 076200 "Sheet Metal Flashing and Trim."

1. Solder for Stainless Steel: ASTM B32, Grade Sn96, with acid flux of type recommended by stainless steel sheet manufacturer.
2. Elastomeric Sealant: ASTM C920, chemically curing urethane sealant; of type, grade, class, and use classifications required to seal joints in sheet metal flashing and remain watertight.

E. Adhesives, Primers, and Seam Tapes for Flashings: Flashing manufacturer's standard products or products recommended by flashing manufacturer for bonding flashing sheets to each other and to substrates.

F. Termination Bar Fasteners and Spacing: Provide stainless steel fasteners at maximum 8 inches o.c.; apply continuous bead of sealant at top edge under termination bar.

G. Termination Bars for Flexible Flashing, Flanged: Stainless steel sheet 0.019 inch by 1-1/2 inches with a 3/8-inch flange at top.

2.5 ACCESSORIES

A. Compressible Filler: Premolded filler strips complying with ASTM D1056, Grade 2A1; compressible up to 35 percent; of width and thickness indicated; formulated from PVC.

B. Weep/Vent Products: Use the following unless otherwise indicated:

1. Cellular Plastic Weep/Vent: One-piece, flexible extrusion made from UV-resistant polypropylene copolymer, full height and width of head joint and depth 1/8 inch less than depth of outer wythe, in color selected from manufacturer's standard. Color to match mortar where exposed.
   a. Manufacturers: Subject to compliance with requirements, undefined:
      1) Hohmann & Barnard, Inc.
      2) Heckmann Building Products.
      3) or approved equal.

C. Cavity Drainage Material: Free-draining mesh, made from polymer strands that will not degrade within the wall cavity.

1. Manufacturers: Subject to compliance with requirements, undefined:
   a. Hohmann & Barnard.
   b. Heckmann Building Products.
   c. or approved equal.
2. Configuration: Provide one of the following:
   a. Strips, full depth of cavity and 10 inches high, with dovetail-shaped notches 7 inches deep that prevent clogging with mortar droppings.

b. Strips, not less than 1-1/2 inches thick and 10 inches high, with dimpled surface designed to catch mortar droppings and prevent weep holes from clogging with mortar.
c. Sheets or strips, full depth of cavity and installed to full height of cavity.
d. Sheets or strips not less than 1 inch thick and installed to full height of cavity, with additional strips 4 inches high at weep holes and thick enough to fill entire depth of cavity and prevent weep holes from clogging with mortar.

D. Proprietary Acidic Masonry Cleaner: Manufacturer's standard-strength cleaner designed for removing mortar/grout stains, efflorescence, and other new construction stains from new masonry without discoloring or damaging masonry surfaces. Use product expressly approved for intended use by cleaner manufacturer and manufacturer of masonry units being cleaned.

1. Manufacturers: Subject to compliance with requirements, undefined:
   a. PROSOCO, Inc.
   b. Or Approved Equal.

2.6 MORTAR MIXES

A. General: Do not use admixtures, including pigments, air-entraining agents, accelerators, retarders, water-repellent agents, antifreeze compounds, or other admixtures unless otherwise indicated.

1. Do not use calcium chloride in mortar or grout.
2. Use mortar unless otherwise indicated.
3. Add cold-weather admixture (if used) at same rate for all mortar that will be exposed to view, regardless of weather conditions, to ensure that mortar color is consistent.

B. Preblended, Dry Mortar Mix: Furnish dry mortar ingredients in form of a preblended mix. Measure quantities by weight to ensure accurate proportions, and thoroughly blend ingredients before delivering to Project site.

C. Mortar for Unit Masonry: Comply with ASTM C270, Proportion Specification.

1. Above grade brick veneer: Type N.
2. At shelf angles, sills, copings, and veneer below grade or in contact with earth: Type S.

D. Pigmented Mortar: Use colored cement product or select and proportion pigments with other ingredients to produce color required. Do not add pigments to colored cement products.

1. Pigments shall not exceed 10 percent of portland cement by weight.
2. Pigments shall not exceed 5 percent of or mortar cement by weight.
3. Mix to match existing adjacent.
4. Application: Use pigmented mortar for exposed mortar joints with the following units:
   a. Clay face brick.
   b. Cast-stone trim units.

PART 3 - EXECUTION

3.1 EXAMINATION

A. Examine conditions, with Installer present, for compliance with requirements for installation tolerances and other conditions affecting performance of the Work.

1. For the record, prepare written report, endorsed by Installer, listing conditions detrimental to performance of the Work.
2. Verify that substrates are free of substances that impair mortar bond.

B. Proceed with installation only after unsatisfactory conditions have been corrected.

3.2 INSTALLATION, GENERAL

A. Leave openings for equipment to be installed before completing masonry. After installing equipment, complete masonry to match the construction immediately adjacent to opening.

B. Use full-size units without cutting if possible. If cutting is required to provide a continuous pattern or to fit adjoining construction, cut units with motor-driven saws; provide clean, sharp, unchipped edges. Allow units to dry before laying unless wetting of units is specified. Install cut units with cut surfaces and, where possible, cut edges concealed.

C. Select and arrange units for exposed unit masonry to produce a uniform blend of colors and textures. Mix units from several pallets or cubes as they are placed.

D. Matching Existing Masonry: Match coursing, bonding, color, and texture of existing masonry.

E. Wetting of Brick: Wet brick before laying if initial rate of absorption exceeds 30 g/30 sq. in. per minute when tested in accordance with ASTM C67/C67M. Allow units to absorb water so they are damp but not wet at time of laying.

3.3 TOLERANCES

A. Dimensions and Locations of Elements:

1. For dimensions in cross section or elevation, do not vary by more than plus 1/2 inch or minus 1/4 inch.
2. For location of elements in plan, do not vary from that indicated by more than plus or minus 1/2 inch.
3. For location of elements in elevation, do not vary from that indicated by more than plus or minus 1/4 inch in a story height or 1/2 inch total.

B. Lines and Levels:

1. For bed joints and top surfaces of bearing walls, do not vary from level by more than 1/4 inch in 10 ft., or 1/2-inch maximum.
2. For conspicuous horizontal lines, such as lintels, sills, parapets, and reveals, do not vary from level by more than 1/8 inch in 10 ft., 1/4 inch in 20 ft., or 1/2-inch maximum.

3. For vertical lines and surfaces, do not vary from plumb by more than 1/4 inch in 10 ft., 3/8 inch in 20 ft., or 1/2-inch maximum.
4. For conspicuous vertical lines, such as external corners, door jambs, reveals, and expansion and control joints, do not vary from plumb by more than 1/8 inch in 10 ft., 1/4 inch in 20 ft., or 1/2-inch maximum.
5. For lines and surfaces, do not vary from straight by more than 1/4 inch in 10 ft., 3/8 inch in 20 ft., or 1/2-inch maximum.
6. For vertical alignment of exposed head joints, do not vary from plumb by more than 1/4 inch in 10 ft., or 1/2-inch maximum.
7. For faces of adjacent exposed masonry units, do not vary from flush alignment by more than 1/16 inch except due to warpage of masonry units within tolerances specified for warpage of units.

C. Joints:

1. For bed joints, do not vary from thickness indicated by more than plus or minus 1/8 inch, with a maximum thickness limited to 1/2 inch.
2. For exposed bed joints, do not vary from bed-joint thickness of adjacent courses by more than 1/8 inch.
3. For head and collar joints, do not vary from thickness indicated by more than plus 3/8 inch or minus 1/4 inch.
4. For exposed head joints, do not vary from thickness indicated by more than plus or minus 1/8 inch. Do not vary from adjacent bed-joint and head-joint thicknesses by more than 1/8 inch.
5. For exposed bed joints and head joints of stacked bond, do not vary from a straight line by more than 1/16 inch from one masonry unit to the next.

3.4 LAYING MASONRY WALLS

A. Lay out walls in advance for accurate spacing of surface bond patterns with uniform joint thicknesses and for accurate location of openings, movement-type joints, returns, and offsets. Avoid using less-than-half-size units, particularly at corners, jambs, and, where possible, at other locations.

B. Bond Pattern for Exposed Masonry: Unless otherwise indicated, lay exposed masonry in running bond; do not use units with less-than-nominal 4-inch horizontal face dimensions at corners or jambs.

C. Stopping and Resuming Work: Stop work by stepping back units in each course from those in course below; do not tooth. When resuming work, clean masonry surfaces that are to receive mortar, remove loose masonry units and mortar, and wet brick if required before laying fresh masonry.

D. Built-in Work: As construction progresses, build in items specified in this and other Sections. Fill in solidly with masonry around built-in items.

E. Fill space between steel frames and masonry solidly with mortar unless otherwise indicated.

3.5 MORTAR BEDDING AND JOINTING

A. Lay solid masonry units with completely filled bed and head joints; butter ends with sufficient mortar to fill head joints and shove into place. Do not deeply furrow bed joints or slush head joints.

B. Lay with face shells fully bedded in mortar and with head joints of depth equal to bed joints. At starting course, fully bed entire units, including area under cells.

1. At anchors and ties, fully bed units and fill cells with mortar as needed to fully embed anchors and ties in mortar.

C. Set cast-stone trim units in full bed of mortar with full vertical joints.

1. Clean soiled surfaces with fiber brush and soap powder and rinse thoroughly with clear water.
2. Allow cleaned surfaces to dry before setting.
3. Wet joint surfaces thoroughly before applying mortar.
4. Rake out mortar joints for pointing with sealant.

D. Tool exposed joints slightly concave when thumbprint hard, using a jointer larger than joint thickness unless otherwise indicated.

1. For glazed masonry units, use a nonmetallic jointer 3/4 inch or more in width.

3.6 ANCHORED MASONRY VENEERS

A. Anchor masonry veneers to concrete and masonry backup with seismic masonry-veneer anchors to comply with the following requirements:

1. Fasten masonry backup using two-piece, adjustable anchors as indicated.
2. Fasten **to** concrete with metal fasteners of type indicated. Use two fasteners unless anchor design only uses one fastener.
3. Embed connector sections and continuous w**ire** in masonry joints.
4. Locate anchor sections to allow maximum vertical differential movement of ties up and down.
5. Space anchors not more than 16 inches o.c. vertically and 24 inches o.c. horizontally (≤ 2.67 sq. ft. of wall area per anchor). Provide additional anchors within 12 inches of openings and at maximum 8 inches o.c. around perimeters of openings and at vertical movement joints.

B. Provide not less than 1 inch of airspace between back of masonry veneer and face of insulation.

1. Keep airspace clean of mortar droppings and other materials during construction. Bevel beds away from airspace, to minimize mortar protrusions into airspace. Do not attempt to trowel or remove mortar fins protruding into airspace.

3.7 ANCHORING MASONRY TO STRUCTURAL STEEL AND CONCRETE

A. Anchor masonry to structural steel and concrete, where masonry abuts or faces structural steel or concrete to comply with the following:

1. Provide an open space not less than 1 inch wide between masonry and structural steel or concrete unless otherwise indicated. Keep open space free of mortar and other rigid materials.
2. Anchor masonry with anchors embedded in masonry joints and attached to structure.
3. Space anchors as indicated, but not more than 16 inches o.c. vertically and 24 inches o.c. horizontally.

3.8 EXPANSION JOINTS

A. General: Install expansion-joint materials in unit masonry as masonry progresses. Do not allow materials to span expansion joints without provision to allow for in-plane wall or partition movement.

B. Form expansion joints as follows:

1. Build flanges of metal expansion strips into masonry. Lap each joint 4 inches in direction of water flow. Seal joints below grade and at junctures with horizontal expansion joints if any.
2. Build flanges of factory-fabricated, expansion-joint units into masonry.
3. Build in compressible joint fillers where indicated.
4. Form open joint full depth of brick wythe and of width indicated, but not less than 3/8 inch for installation of sealant and backer rod specified in Section 079200 "Joint Sealants."

C. Provide horizontal, pressure-relieving joints by either leaving an airspace or inserting a compressible filler of width required for installing sealant and backer rod specified in Section 079200 "Joint Sealants," but not less than 3/8 inch.

1. Locate horizontal, pressure-relieving joints beneath shelf angles supporting masonry.

3.9 LINTELS

A. Install steel lintels where indicated.

B. Provide offset angle supports where indicated and where openings of more than 12 inches for brick-size units and 24 inches for block-size units are indicated without structural steel or other supporting lintels.

C. Provide minimum bearing of 8 inches at each jamb unless otherwise indicated.

3.10 FLASHING, WEEP HOLES, AND VENTS

A. General: Install embedded flashing and weep holes in masonry at shelf angles, lintels, ledges, other obstructions to downward flow of water in wall, and where indicated. Install cavity vents at shelf angles, ledges, and other obstructions to upward flow of air in cavities, and where indicated.

B. Install flashing as follows unless otherwise indicated:

1. Prepare masonry surfaces so they are smooth and free from projections that could puncture flashing. Where flashing is within mortar joint, place through-wall flashing on

sloping bed of mortar and cover with mortar. Before covering with mortar, seal penetrations in flashing with adhesive, sealant, or tape as recommended by flashing manufacturer.

2. Extend flashing through veneer, across airspace behind veneer, and up face of CMU at least 8 inches; with upper edge lapping/sealed to fluid applied air barrier system, lapping at least 4 inches. Fasten upper edge of flexible flashing to backup with termination bar.
3. At lintels and shelf angles, extend flashing 8 inches minimum, to edge of next full unit at each end. At heads and sills, extend flashing 8 inches minimum, to edge of next full unit and turn ends up not less than 2 inches to form end dams.
4. Install metal drip edges and sealant stops with sawtooth sheet metal flashing by interlocking hemmed edges to form hooked seam. Seal seam with elastomeric sealant complying with requirements in Section 079200 "Joint Sealants" for application indicated.
5. Install metal drip edges beneath flexible flashing at exterior face of wall. Stop flexible flashing 1/2 inch back from outside face of wall, and adhere flexible flashing to top of metal drip edge.
6. Install metal flashing termination beneath flexible flashing at exterior face of wall. Stop flexible flashing 1/2 inch back from outside face of wall, and adhere flexible flashing to top of metal flashing termination.
7. Cut flexible flashing off flush with face of wall after masonry wall construction is completed.
8. Keep cavity face of backup clean of mortar fins; use mortar collection material above all through-wall flashings; do not attempt to trowel mortar out of the cavity.

C. Install reglets and nailers for flashing and other related construction where they are indicated to be built into masonry.

D. Install weep holes in veneers in head joints of first course of masonry immediately above embedded flashing.

1. Use specified weep/cavity vent products to form weep holes.
2. Space weep holes 24 inches o.c. maximum unless otherwise indicated.
3. Cover cavity side of weep holes with plastic insect screening at cavities insulated with loose-fill insulation.

E. Place cavity drainage material in airspace behind veneers to comply with configuration requirements for cavity drainage material in "Accessories" Article.

F. Install vents in head joints in exterior wythes at spacing indicated. Use specified weep/cavity vent products to form vents.

1. Close cavities off vertically and horizontally with blocking in manner indicated. Install through-wall flashing and weep holes above horizontal blocking.

3.11 FIELD QUALITY CONTROL

A. Testing and Inspecting: Owner will engage special inspectors to perform tests and inspections and prepare reports. Allow inspectors access to scaffolding and work areas as needed to perform tests and inspections. Retesting of materials that fail to comply with specified requirements shall be done at Contractor's expense.

B. Testing Prior to Construction: One set of tests.

C. Testing Frequency: One set of tests for each 5000 sq. ft. of wall area or portion thereof.

D. Clay Masonry Unit Test: For each type of unit provided, according to ASTM C67 for compressive strength.

E. Mortar Aggregate Ratio Test (Proportion Specification): For each mix provided, according to ASTM C780.

F. Mortar Test (Property Specification): For each mix provided, according to ASTM C780. Test mortar for mortar air content and compressive strength.

3.12 REPAIRING, POINTING, AND CLEANING

A. Remove and replace masonry units that are loose, chipped, broken, stained, or otherwise damaged or that do not match adjoining units. Install new units to match adjoining units; install in fresh mortar, pointed to eliminate evidence of replacement.

B. Pointing: During the tooling of joints, enlarge voids and holes, except weep holes, and completely fill with mortar. Point up joints, including corners, openings, and adjacent construction, to provide a neat, uniform appearance. Prepare joints for sealant application, where indicated.

C. In-Progress Cleaning: Clean unit masonry as work progresses by dry brushing to remove mortar fins and smears before tooling joints.

D. Final Cleaning: After mortar is thoroughly set and cured, clean exposed masonry as follows:

1. Remove large mortar particles by hand with wooden paddles and nonmetallic scrape hoes or chisels.
2. Test cleaning methods on sample wall panel; leave one-half of panel uncleaned for comparison purposes. Obtain Architect's approval of sample cleaning before proceeding with cleaning of masonry.
3. Protect adjacent stone and nonmasonry surfaces from contact with cleaner by covering them with liquid strippable masking agent or polyethylene film and waterproof masking tape.
4. Wet wall surfaces with water before applying cleaners; remove cleaners promptly by rinsing surfaces thoroughly with clear water.
5. Clean brick by bucket-and-brush hand-cleaning method described in BIA Technical Notes 20.
6. Clean masonry with a proprietary acidic cleaner applied according to manufacturer's written instructions.

3.13 MASONRY WASTE DISPOSAL

A. Salvageable Materials: Unless otherwise indicated, excess masonry materials are Contractor's property. At completion of unit masonry work, remove from Project site.

B. Excess Masonry Waste: Remove excess masonry waste that cannot be used as fill, as described above or recycled, and other masonry waste, and legally dispose of off Owner's property.

END OF SECTION 042613

SECTION 047200 - CAST STONE

PART 1 GENERAL

1.1 SECTION INCLUDES

A. Architectural cast stone.
B. Architectural cast stone sills, headers and trim units
C. Custom cast stone symbols.

1.2 RELATED SECTIONS

C. Section 04200 – Concrete Unit Masonry.

D. Section 042613 – Masonry Veneer.

E. Section 079000 – Joint Sealants.

1.3 REFERENCES

A. ASTM A 615/A 615M - Deformed and Plain Billet-Steel Bars for Concrete Reinforcement.

B. ASTM A767/A767M - Zinc-Coated (Galvanized) Steel Bars for Concrete Reinforcement.

C. ASTM C 33 - Concrete Aggregates.

D. ASTM C 90 - Loadbearing Concrete Masonry Units.

E. ASTM C 140 - Sampling and Testing Concrete Masonry Units and Related Units.

F. ASTM C 150 - Portland Cement.

G. ASTM C 270 - Mortar for Unit Masonry.

H. ASTM C 426 - Linear Drying Shrinkage of Concrete Masonry Units.

I. ASTM C 494 - Chemical Admixtures for Concrete.

J. ASTM C 666 - Resistance of Concrete to Rapid Freezing and Thawing.

K. ASTM C 979 - Pigments for Integrally Colored Concrete.

L. ASTM C 1194 - Compressive Strength of Architectural Cast Stone.

M. ASTM C 1195 - Absorption of Architectural Cast Stone.

N. ASTM C 1364 - Architectural Cast Stone.

O. Cast Stone Institute Technical Manual.

1.4 DEFINITIONS

A. Cast Stone: An architectural masonry unit manufactured to copy fine grain texture and color of natural cut stone.

B. Dry Cast Concrete Products: Manufactured from zero-slump concrete.

C. Machine Casting Method: Vibratory compaction by machine of earth-moist, zero-slump concrete against rigid mold until it is densely compacted.

D. Vibrant Dry Hand Tamp Casting Method: Vibratory compaction by hand tamp of earth-moist, zero-slump concrete against rigid mold until it is densely compacted.

1.5 SUBMITTALS

A. Comply with Section 013300 - Submittal Procedures.

B. Product Data: Submit manufacturer's product data.

C. Shop Drawings: Submit manufacturer's shop drawings, including profiles, cross sections, modular unit lengths, reinforcement if required, exposed faces, anchors and anchoring method recommendations if required, and annotation of cast stone types and location. All shop drawings

D. Samples: Submit pieces of manufacturer's cast stone units that represent general range of texture and color proposed to be furnished for project.

E. Test Results:
1. Submit manufacturer's test results from cast stone units previously made by manufacturer using materials from same sources proposed for use in project.
2. Submit manufacturer's test results from plant production testing.

F. Manufacturer's Project References: Submit list of projects similar in scope, including project name and location, name of architect, and type and quantity of cast stone units installed.

G. Warranty: Submit manufacturer's standard warranty.

1.6 QUALITY ASSURANCE

A. Manufacturer Qualifications:
1. Sufficient plant facilities to provide quality, shapes, quantities, and sizes of cast stone units required without delaying progress of the Work.
2. Minimum of 10 years' experience in producing masonry units or cast stone.

D. Mock-Ups: See Mock-Ups Specification Section.

1.7 DELIVERY, STORAGE, AND HANDLING

A. Delivery:
1. Deliver cast stone units secured to shipping pallets and protected from damage and discoloration.
2. Provide itemized shipping list.
3. Number each piece individually, as required, to match shop drawings and schedules.

B. Storage:
1. Store cast stone units and installation materials in accordance with manufacturer's instructions.
2. Store cast stone units on pallets with nonstaining, waterproof covers.

3. Do not double stack pallets.
4. Ventilate units under covers to prevent condensation.
5. Prevent contact with dirt and splashing.

C. Handling:
1. Protect cast stone units, including corners and edges, during storage, handling, and installation to prevent chipping, cracking, staining, or other damage.
2. Handle long units at center and both ends simultaneously to prevent cracking.

1.8 SCHEDULING

A. Schedule and coordinate production and delivery of cast stone units with unit masonry work.

PART 2: PRODUCTS

2.1 MANUFACTURER

A. Basis of Design: **Shouldice Designer Stone** by Diener Brick Company (Bill Rutherford 609-922-0099)
B. Or Approved Equal

2.2 ARCHITECTURAL UNITS

a. Architectural Units: Shouldice Designer Stone by Diener Brick
b. Alternates
c. American Art Stone
d. Rockcast

B. Compliance: ASTM C 90.

C. Casting Method: Machine.

D. Texture: **Tapestry**

E. Color: as selected by architect form manufacturers full range

F. Options
a. Bevel 1”

G. Units: Size to match approved sample from architect or detailed on drawings.
a. 3 ½” x 7 ½” x 15 3/8”

G. Test Results:
1. Compressive Strength, ASTM C 140: 3200 - 5,000 psi at 28 days.
2. Absorption, ASTM C 140: Less than 6 percent at 28 days.
3. Linear Shrinkage, ASTM C 426: Less than .05 percent.
4. Density, ASTM C 140: Greater than 120 pounds per cubic foot.
5. Freeze-Thaw, ASTM C 666: Less than 4 percent.

H. Curing: Cure in enclosed chamber at 95 percent relative humidity and 95 to 120 degrees F for 12 to 18 hours or yard cure for 350 degree-days.

2.3 CUSTOM CAST STONE UNITS

A. Custom Cast Stone Units: RockCast Custom Cast Stone Series or approved alternates listed in Section 2.2 as distributed by the Diener Brick Company (856-858-2000 Contact: Bill Rutherford)
   a. Alternates
      i. American Art Stone
      ii. Shouldice Designer Stone
      iii. Or approved Equal

B. Compliance: ASTM C 1364.

C. Casting Method: Vibrant dry hand tamp.

D. Color: Color – as selected form manufactures full range of colors .

F. Units: Match Unit sizes as indicated on the drawings.

G. Profiles: Provide all materials listed as per the drawings indicate and shapes listed below. See Drawings or Rockcast Ready shape guide for Details.
   1. Cast stone sill
   2. Cast stone header
   3. Cast stone custom shapes
   4. Cast stone custom symbol

H. Test Results:
   1. Compressive Strength, ASTM C 1194: Greater than 6,500 psi at 28 days.
   2. Absorption, ASTM C 1195: Less than 6 percent at 28 days.
   3. Linear Shrinkage, ASTM C 426: Less than .05 percent.
   4. Density, ASTM C 140: Greater than 120 pounds per cubic foot.
   5. Freeze-Thaw, ASTM C 666: Less than 4 percent.

I. Curing: Cure in enclosed chamber at 100 percent relative humidity and 90 degrees F for up to 16 hours and yard cure for a minimum of 3 days.

2.4 CAST STONE MATERIALS

A. Portland Cement: ASTM C 150, Type I or III. White and/or gray as required to match specified color.

B. Coarse Aggregates: ASTM C 33, except for gradation. Granite, quartz, or limestone.

C. Fine Aggregates: ASTM C 33, except for gradation. Manufactured or natural sands.

D. Pigments: ASTM C 979, except do not use carbon black pigments. Inorganic iron oxide pigments.

E. Water Reducing, Retarding, and Accelerating Admixtures: ASTM C 494.

F. Water: Potable.

G. Reinforcing Bars: ASTM A 615, deformed steel bars. Galvanized when covered with less than 1-1/2 inches of material.
   1. Galvanized Coating: ASTM A 767.

2.5 TEXTURE AND COLOR

A. General: Match texture and color of full-size sample on file with Architect.

B. Texture of Surfaces Exposed to View:

1. Fine-grained texture similar to natural stone.
2. Approximately equal to approved sample when viewed in direct daylight at 10 feet.

C. Surface Voids:
1. Size: Maximum 1/32 inch.
2. Density: Less than 3 occurrences per any 1 square inc

3. Viewing Conditions: Not obvious under direct daylight at 10 feet.

D. Minor Chipping:
1. Minor chipping resulting from shipping and delivery shall not be grounds for rejection of cast stone units.
2. Minor chips shall not be obvious under direct daylight at 20 feet, as determined by Architect.

E. Color Variation:
1. Viewing Conditions: Compare in direct daylight at 10 feet, between cast stone units of similar age, subjected to similar weathering conditions.

2.6 MORTAR

A. Mortar: Argos Portland Lime Type N or approved alternate.

2.7 ACCESSORIES

A. Anchors: Non-corrosive type, sized for conditions. [Brass] [Hot-dip galvanized steel] [Type 304 stainless steel].

B. Sealant: As specified in Section 07900.

C. Cleaner: Verify cleaning method and cleaning agent with brick manufacturer and Rockcast. Test cleaning method on field panel for architect's approval prior to cleaning. Special cleaning techniques are needed for darker colors. Do not apply any type muriatic acid, untested masonry cleaner or high pressure wash on any Rockcast/CMU products.

2.8 FABRICATION

A. Shapes: Unless otherwise indicated on drawings, provide:
1. Suitable wash on exterior sills, copings, projecting courses, and units with exposed top surfaces.
2. Drips on projecting units, wherever possible.

B. Reinforcement: As required to withstand handling stresses.

2.9 TOLERANCES

A. General: Manufacture cast stone units within tolerances in accordance with Cast Stone Institute Technical Manual, unless otherwise specified.

B. Cross Section Dimensions: Do not deviate by more than plus or minus 1/8 inch from approved dimensions.

C. Length of Units: Do not deviate by more than length/360 or plus or minus 1/8 inch, whichever is greater, not to exceed plus or minus 1/4 inch.

D. Warp, Bow, or Twist: Do not exceed length/360 or plus or minus 1/8 inch, whichever is greater.

2.10 PRODUCTION QUALITY CONTROL

A. Mix Designs: Test new and existing mix designs for compressive strength and absorption before manufacturing cast stone units.

B. Plant Production Testing: Test compressive strength and absorption from specimens selected at random from plant production. Obtain samples every 500 cubic feet of product produced.
   1. Architectural Units: Test in accordance with ASTM C 140.
   2. Custom Cast Stone Units: Test in accordance with ASTM C 1194 and C 1195.

PART 3: EXECUTION

3.1 EXAMINATION

A. Examine construction to receive cast stone units. Notify Architect if construction is not acceptable. Do not begin installation until unacceptable conditions have been corrected.

B. Examine cast stone units before installation. Do not install unacceptable units.

3.2 INSTALLATION

A. Install cast stone units in conjunction with masonry, as specified in Section 04810.

B. Pull units from multiple cubes during installation to minimize variation in color.

C. Cut units using motor-driven masonry saws.

D. Do not use pry bars or other equipment in a manner that could damage cast stone units.

E. Fill dowel holes and anchor slots completely with mortar or non-shrink grout.

F. Set cast stone units in full bed of mortar, unless otherwise indicated on the drawings.

G. Fill vertical joints with mortar.

H. Make joints 3/8 inch, unless otherwise indicated on the drawings.

I. Leave head joints in copings and similar units open for sealant.

J. Rake mortar joints 3/4 inch for pointing.

K. Tuck point mortar joints to slight concave profile.

L. Remove excess mortar immediately.

M. Remove mortar fins and smears before tooling joints.

N. Sealant Joints:
   1. As specified in Section 07900.
   2. Prime ends of cast stone units, insert properly sized backing rod, and install sealant.
   3. Provide sealant joints at following locations:
      a. Cast stone units with exposed tops.

b. Joints at relieving angles.
c. Control and expansion joints.
d. As indicated on the drawings.

3.3 TOLERANCES

A. Installation Tolerances: Comply with Cast Stone Institute Technical Manual.
1. Variation from Plumb: Do not exceed 1/8 inch in 5 feet or 1/4 inch in 20 feet or more.
2. Variation from Level: Do not exceed 1/8 inch in 5 feet, 1/4 inch in 20 feet, or 3/8 inch maximum.
3. Variation in Joint Width: Do not vary joint thickness more than 1/8 inch or 1/4 of nominal joint width, whichever is greater.
4. Variation in Plane Between Adjacent Surfaces: Do not exceed 1/8-inch difference between planes of adjacent units or adjacent surfaces indicated to be flush with units.

3.4 CLEANING

A. Clean exposed units after mortar is thoroughly set and cured.

B. Wet surfaces before applying cleaner.

C. Apply cleaner to cast stone units in accordance with cleaner manufacturer's instructions.

D. Perform test of cleaner on small area and receive approval by Architect before full cleaning.

E. Do not use the following to clean cast stone units:
1. Muriatic acid.
2. Power washing.
3. Sandblasting.
4. Harsh cleaning materials or methods that would damage or discolor surfaces.

3.5 REPAIR

A. Repair chips and other surface damage noticeable when viewed in direct daylight at 20 feet.

B. Repair with touchup materials provided by manufacturer in accordance with manufacturer's instructions.

C. Repair methods and results to be approved by Architect.

3.6 INSPECTION AND ACCEPTANCE

A. Inspect completed installation in accordance with Cast Stone Institute Technical Manual.

3.7 WATER REPELLANT

A. Apply silane or siloxane water repellant for weatherproofing cast stone in accordance with water repellant manufacturer's instructions.

B. Apply water repellant after installation, cleaning, repair, inspection, and acceptance of cast stone are completed.

3.8 PROTECTION

A. Protect installed cast stone from splashing, stains, mortar, and other damage.

END OF SECTION 047200

SECTION 047200 - CAST STONE MASONRY

PART 1 - GENERAL

1.1 SUMMARY

1. Section Includes:

a. Architectural cast stone masonry units fabricated by either the vibrant dry-tamp (dry-cast) or wet-cast method to simulate natural cut stone.
b. Trim, copings, sills, band courses, water tables, pier caps, wall caps, surrounds, lintels, and other architectural elements indicated on drawings.

2. Related Requirements:

a. Section 079200 “Joint Sealants.”
b. Section 042000 “Unit Masonry” – Mortar materials and basic masonry requirements.
c. Section 042613 “Masonry Veneer” – Coordination of joint alignment and mock-ups.
d. Section 076200 “Sheet Metal Flashing and Trim” – Through-wall flashing and reglets interfacing with cast stone.

1.2 DEFINITIONS

A. Cast Stone: An architectural precast concrete masonry product manufactured to simulate natural cut stone and conforming to ASTM C1364.

B. Dry-Cast (Vibratory Dry Tamp) Method: A zero-slump concrete mix consolidated by vibration and hand tamping against rigid molds until densely compacted.

C. Wet-Cast Method: A measurable-slump concrete mix consolidated by vibration into molds and cured under controlled conditions.

D. Either wet-cast or dry-cast methods may be used, provided finished units comply with all physical requirements and appearance tolerances of ASTM C1364 and match approved samples.

1.3 SUBMITTALS

A. Product Data

1. Manufacturer’s descriptive literature and technical data for each cast-stone product, including material composition, finish, color range, physical-property test results, and curing method.
2. Data for setting anchors, dowels, joint materials, and related accessories.

B. Shop Drawings

1. Indicate dimensions, profiles, jointing, anchorage, reinforcement, and relationship to

adjoining construction.
2. Identify units requiring special fabrication or coordination with flashing or structural supports.
3. Include anchor type, spacing, and embedment depth based on manufacturer's engineering.

C. Samples

1. Minimum size 6 by 6 inches for each color and texture specified, showing full range of finish and aggregate appearance.
2. Approved samples will serve as the standard of appearance for the Work.

D. Certificates and Test Reports

1. Certificate of Compliance indicating that products meet ASTM C1364 requirements.
2. Evidence of manufacturer's Cast Stone Institute (CSI) Certified Producer status or equivalent quality program.

1.4 DELIVERY, STORAGE, AND HANDLING

A. Delivery:

1. Deliver cast stone units secured to shipping pallets and protected from damage and discoloration.
2. Provide itemized shipping list.
3. Number each piece individually, as required, to match shop drawings and schedules.

B. Storage:

1. Store cast stone units and installation materials in accordance with manufacturer's instructions.
2. Store cast stone units on pallets with nonstaining, waterproof covers.
3. Do not double stack pallets.
4. Ventilate units under covers to prevent condensation.
5. Prevent contact with dirt and splashing.

C. Handling:

1. Protect cast stone units, including corners and edges, during storage, handling, and installation to prevent chipping, cracking, staining, or other damage.
2. Handle long units at center and both ends simultaneously to prevent cracking.

1.5 QUALITY ASSURANCE

A. Manufacturer's Qualifications

1. Producer regularly engaged in manufacturing architectural cast-stone units complying with ASTM C1364 for a minimum of five (5) consecutive years.
2. Member in good standing of the Cast Stone Institute (CSI) or equivalent third-party certified producer demonstrating conformance with CSI Plant Certification Program.

B. Installer Qualifications - Per Section 042613 – Unit Masonry.

C. Mockup - Include cast stone masonry in mockup required per Section 042613 – Unit Masonry.

D. Source Quality Control

1. Perform tests per ASTM C1364 on representative units from the same mix design to verify compliance. Submit test reports prior to shipment.

E. Field Quality Control: Replace or repair units that are cracked, chipped, or otherwise damaged, subject to Architect's approval.

PART 2 - PRODUCTS

2.1 CAST STONE UNITS

A. Cast Stone Units: Comply with ASTM C1364. Manufacturer required to be a Cast Stone Institute (CSI) Certified Producer.

1. Basis of Design: RockCast by Diener Brick Co.; or approved equal meeting ASTM C1364.
2. Units may be manufactured using either the dry-cast or wet-cast method at the manufacturer's discretion, unless otherwise indicated.
3. Casting Method:

   a. Acceptable processes include the vibrant dry-tamp (dry-cast) and wet-cast methods.
   b. Select casting method to suit unit profile, detail, and finish requirements.
   c. Regardless of method, provide units meeting physical and aesthetic requirements of ASTM C1364 and matching the approved samples in color and texture.

4. Provide profiles indicated on drawings.

B. Fabricate units with sharp arris and accurately reproduced details, with indicated texture on all exposed surfaces unless otherwise indicated.

1. Slope exposed horizontal surfaces 1:12 to drain unless otherwise indicated.
2. Provide raised fillets at backs of sills and at ends indicated to be built into jambs.
3. Provide drips on projecting elements unless otherwise indicated.

C. Fabrication Tolerances:

1. Variation in Cross Section: Do not vary from indicated dimensions by more than 1/8 inch.
2. Variation in Length: Do not vary from indicated dimensions by more than 1/360 of the length of unit or 1/8 inch, whichever is greater, but in no case by more than 1/4 inch.
3. Warp, Bow, and Twist: Not to exceed 1/360 of the length of unit or 1/8 inch, whichever is greater.
4. Location of Grooves, False Joints, Holes, Anchorages, and Similar Features: Do not vary from indicated position by more than 1/8 inch on formed surfaces of units and 3/8 inch on unformed surfaces.

D. Cure Units as Follows:

1. Cure units in enclosed, moist curing room at 95 percent relative humidity and

temperature of 100 deg F for 12 hours or 70 deg F for 16 hours.

2. Keep units damp and continue curing to comply with one of the following:

   a. No fewer than five days at mean daily temperature of 70 deg F or above.
   b. No fewer than seven days at mean daily temperature of 50 deg F or above.

E. Colors and Textures: As selected by Architect from manufacturer's full range..

2.2 MORTAR MATERIALS

A. Provide mortar materials that comply with Section 042000 "Unit Masonry".

B. Portland Cement: ASTM C150/C150M, Type I or II, except Type III may be used for cold-weather construction. Provide natural color or white cement as required to produce mortar color indicated.

C. Hydrated Lime: ASTM C207, Type S.

D. Portland Cement-Lime Mix: Packaged blend of portland cement and hydrated lime containing no other ingredients.

E. Aggregate for Mortar: ASTM C144.

1. For mortar that is exposed to view, use washed aggregate consisting of natural sand or crushed stone.
2. For joints less than 1/4 inch thick, use aggregate graded with 100 percent passing the No. 16 sieve.
3. White-Mortar Aggregates: Natural white sand or crushed white stone.
4. Colored Aggregates: Natural sand or crushed stone of color necessary to produce required mortar color.

F. Water: Potable.

2.3 ACCESSORIES

A. Anchors and Dowels:

1. Type 304 stainless steel for all exposed or semi-exposed conditions.
2. Hot-dip galvanized steel per ASTM A767 permitted only where fully embedded with not less than 1-1/2 inch concrete or mortar cover.
3. Provide anchor types, sizes, and spacing as shown on Structural drawings.

2.4 MORTAR MIXES

A. Comply with requirements in Section 042000 "Unit Masonry" for mortar mixes.

B. Comply with ASTM C270, Proportion Specification.

1. For setting mortar, use Type N.
2. For pointing mortar, use Type N.

C. Preblended dry mortar mix complying with ASTM C1714/C1714M and capable of producing mortar strength as indicated in ASTM C270.

1. For setting mortar, use Type N.
2. For pointing mortar, use Type N.

PART 3 - EXECUTION

3.1 EXAMINATION

A. Examine substrates and conditions, with Installer present, for compliance with requirements for installation tolerances and other conditions affecting performance of the Work.

B. Proceed with installation only after unsatisfactory conditions have been corrected.

C. Where both wet-cast and dry-cast units occur within the same elevation or assembly, verify color, texture, and dimensional compatibility at mock-up stage. Adjust placement to ensure uniform appearance at transitions.

3.2 SETTING CAST STONE IN MORTAR

A. Set cast stone as indicated in TMS 604.

B. Set cast stone as indicated on Drawings. Set units accurately in locations indicated, with edges and faces aligned according to established relationships and indicated tolerances.

1. Install anchors, supports, fasteners, and other attachments indicated or necessary to secure units in place.
2. Coordinate installation of cast stone with installation of flashing specified in other Sections.

C. Wet joint surfaces thoroughly before applying mortar or setting in mortar.

D. Set units in full bed of mortar with full head joints unless otherwise indicated.

1. Set units with joints 1/4 to 3/8 inch wide unless otherwise indicated.
2. Build anchors and ties into mortar joints as units are set.
3. Fill dowel holes and anchor slots with mortar.
4. Build concealed flashing into mortar joints as units are set.
5. Keep joints at shelf angles open to receive sealant.

E. Rake out joints for pointing with mortar to depths of not less than 3/4 inch. Rake joints to uniform depths with square bottoms and clean sides. Scrub faces of units to remove excess mortar as joints are raked.

F. Point mortar joints by placing and compacting mortar in layers not greater than 3/8 inch. Compact each layer thoroughly and allow it to become thumbprint hard before applying next layer.

G. Provide sealant joints at head joints of copings and other horizontal surfaces; at expansion, control, and pressure-relieving joints; and at locations indicated.

1. Keep joints free of mortar and other rigid materials.
2. Build in compressible foam-plastic joint fillers where indicated.

3. Form joint of width indicated, but not less than 3/8 inch.
4. Prime cast stone surfaces to receive sealant and install compressible backer rod in joints before applying sealant unless otherwise indicated.
5. Prepare and apply sealant of type and at locations indicated to comply with applicable requirements in Section 079200 "Joint Sealants."

3.3 SETTING ANCHORED CAST STONE WITH SEALANT-FILLED JOINTS

A. Set cast stone as indicated in TMS 604.

B. Keep cavities open where unfilled space is indicated between back of cast stone units and backup wall; do not fill cavities with mortar or grout.

C. Fill anchor holes with sealant.

1. Where dowel holes occur at pressure-relieving joints, provide compressible material at ends of dowels.

D. Set cast stone supported on clip or continuous angles on resilient setting shims. Use material of thickness required to maintain uniform joint widths. Hold shims back from face of cast stone a distance at least equal to width of joint.

E. Keep joints free of mortar and other rigid materials. Remove temporary shims and spacers from joints after anchors and supports are secured in place and cast stone units are anchored. Do not begin sealant installation until temporary shims and spacers are removed.

1. Form open joint of width indicated, but not less than 3/8 inch.

F. Prime cast stone surfaces to receive sealant and install compressible backer rod in joints before applying sealant unless otherwise indicated.

G. Prepare and apply sealant of type and at locations indicated to comply with applicable requirements in Section 079200 "Joint Sealants."

H. Coordinate through-wall flashing with Section 076200 “Sheet Metal Flashings and Trim.”

3.4 ADJUSTING AND CLEANING

A. Remove and replace stained and otherwise damaged units and units not matching approved Samples. Cast stone may be repaired if methods and results are approved by Architect.

B. In-Progress Cleaning: Clean cast stone as work progresses.

1. Remove mortar fins and smears before tooling joints.
2. Remove excess sealant immediately, including spills, smears, and spatter.

C. Final Cleaning: After mortar is thoroughly set and cured, clean exposed cast stone as follows:

1. Remove large mortar particles by hand with wooden paddles and nonmetallic scrape hoes or chisels.
2. Test cleaning methods on sample; leave one sample uncleaned for comparison purposes. Obtain Architect's approval of sample cleaning before proceeding with cleaning of cast stone.

3. Protect adjacent surfaces from contact with cleaner by covering them with liquid strippable masking agent or polyethylene film and waterproof masking tape.
4. Wet surfaces with water before applying cleaners; remove cleaners promptly by rinsing thoroughly with clear water.
5. Clean cast stone by methods described in Cast Stone Institute Technical Bulletin #39.
6. Use only cleaners specifically approved by the cast stone manufacturer. Do not use muriatic acid.

END OF SECTION 047200

SECTION 051200 - STRUCTURAL STEEL FRAMING

PART 1 - GENERAL

1.1 SUMMARY

A. Section Includes:

1. Structural steel.
2. Grout.

B. Refer to structural engineering drawings for additional specifications

1.2 DEFINITIONS

A. Structural Steel: Elements of the structural frame indicated on Drawings and as described in AISC 303, "Code of Standard Practice for Steel Buildings and Bridges."

1.3 ACTION SUBMITTALS

A. Product Data: For each type of product.

B. Shop Drawings: Show fabrication of structural-steel components.

1.4 INFORMATIONAL SUBMITTALS

A. Qualification Data: For qualified Installer fabricator and testing agency.

B. Welding certificates.

C. Mill test reports for structural steel, including chemical and physical properties.

D. Source quality-control reports.

E. Field quality-control and special inspection reports.

1.5 QUALITY ASSURANCE

A. Fabricator Qualifications: A qualified fabricator that participates in the AISC Quality Certification Program and is designated an AISC-Certified Plant, Category STD, or is accredited by the IAS Fabricator Inspection Program for Structural Steel (AC 172).

B. Installer Qualifications: A qualified installer who participates in the AISC Quality Certification Program and is designated an AISC-Certified Erector, Category CSE.

C. Welding Qualifications: Qualify procedures and personnel according to AWS D1.1/D1.1M, "Structural Welding Code - Steel."

D. Comply with applicable provisions of the following specifications and documents:

1. AISC 303.
2. AISC 360.
3. RCSC's "Specification for Structural Joints Using ASTM A 325 or A 490 Bolts."

E. Preinstallation Conference: Conduct conference at Project site.

PART 2 - PRODUCTS

2.1 PERFORMANCE REQUIREMENTS

A. Connections: Provide details of simple shear connections required by the Contract Documents to be selected or completed by structural-steel fabricator to withstand loads indicated and comply with other information and restrictions indicated.

2.2 STRUCTURAL-STEEL MATERIALS

A. W-Shapes: ASTM A 992/A 992M, Grade 50.

B. Channels, Angles: ASTM A 36/A 36M.

C. Plate and Bar: ASTM A 36/A 36M.

D. Cold-Formed Hollow Structural Sections: ASTM A 500, Grade B, structural tubing.

E. Steel Pipe: ASTM A 53/A 53M, Type E or S, Grade B.

F. Welding Electrodes: Comply with AWS requirements.

2.3 BOLTS, CONNECTORS, AND ANCHORS

A. High-Strength Bolts, Nuts, and Washers: ASTM A 325, Type 1, heavy-hex steel structural bolts or Tension Controlled bolts; ASTM A 563, Grade C, heavy-hex carbon-steel nuts; and ASTM F 436, Type 1, hardened carbon-steel washers; all with plain finish,

1. Direct-Tension Indicators: ASTM F 959, Type 325, compressible-washer type with plain finish.

B. Unheaded Anchor Rods: ASTM F 1554, Grade 55.

C. Headed Anchor Rods: ASTM F 1554, Grade 55

D. Threaded Rods: ASTM A 36/A 36M.

2.4 PRIMER

A. Primer: Fabricator's standard lead- and chromate-free, nonasphaltic, rust-inhibiting primer complying with MPI#79 and compatible with topcoat.

2.5 GROUT

A. Nonmetallic, Shrinkage-Resistant Grout: ASTM C 1107, factory-packaged, nonmetallic aggregate grout, noncorrosive and nonstaining, mixed with water to consistency suitable for application and a 30-minute working time.

2.6 FABRICATION

A. Structural Steel: Fabricate and assemble in shop to greatest extent possible. Fabricate according to AISC's "Code of Standard Practice for Steel Buildings and Bridges" and AISC 360.

2.7 SHOP CONNECTIONS

A. High-Strength Bolts: Shop install high-strength bolts according to RCSC's "Specification for Structural Joints Using ASTM A 325 or A 490 Bolts" for type of bolt and type of joint specified.

1. Joint Type: Snug tightened, unless indicated as slip-critical, direct-tension, or tensioned shear/bearing connections.

B. Weld Connections: Comply with AWS D1.1/D1.1M for tolerances, appearances, welding procedure specifications, weld quality, and methods used in correcting welding work.

2.8 SHOP PRIMING

A. Shop prime steel surfaces except the following:

1. Surfaces embedded in concrete or mortar. Extend priming of partially embedded members to a depth of 2 inches.
2. Surfaces to be field welded.
3. Surfaces to be high-strength bolted with slip-critical connections.
4. Surfaces to receive sprayed fire-resistive materials (applied fireproofing).
5. Galvanized surfaces.

B. Surface Preparation: Clean surfaces to be painted. Remove loose rust and mill scale and spatter, slag, or flux deposits. Prepare surfaces according to the following specifications and standards:
1. SSPC-SP 3, "Power Tool Cleaning."

C. Priming: Immediately after surface preparation, apply primer according to manufacturer's written instructions and at rate recommended by SSPC to provide a minimum dry film thickness of 1.5 mils. Use priming methods that result in full coverage of joints, corners, edges, and exposed surfaces.

2.9 SOURCE QUALITY CONTROL

A. Testing Agency: Owner will engage a qualified testing agency to perform shop tests and inspections.

1. Provide testing agency with access to places where structural-steel work is being fabricated or produced to perform tests and inspections.

B. Correct deficiencies in Work that test reports and inspections indicate does not comply with the Contract Documents.

C. Bolted Connections: Inspect and test shop-bolted connections according to RCSC's "Specification for Structural Joints Using ASTM A 325 or A 490 Bolts."

1. Provide testing agency with access to places where structural-steel work is being fabricated or produced to perform tests and inspections.

D. Welded Connections: Visually inspect shop-welded connections according to AWS D1.1/D1.1M and the following inspection procedures, at testing agency's option:

1. Liquid Penetrant Inspection: ASTM E 165.
2. Magnetic Particle Inspection: ASTM E 709; performed on root pass and on finished weld. Cracks or zones of incomplete fusion or penetration are not accepted.
3. Ultrasonic Inspection: ASTM E 164.
4. Radiographic Inspection: ASTM E 94.

E. Prepare test and inspection reports.

PART 3 - EXECUTION

3.1 EXAMINATION

A. Verify, with certified steel erector present, elevations of concrete- and masonry-bearing surfaces and locations of anchor rods, bearing plates, and other embedments for compliance with requirements.

B. Proceed with installation only after unsatisfactory conditions have been corrected.

3.2 ERECTION

A. Set structural steel accurately in locations and to elevations indicated and according to AISC 303 and AISC 360.

B. Baseplates Bearing Plates and Leveling Plates: Clean concrete- and masonry-bearing surfaces of bond-reducing materials, and roughen surfaces prior to setting plates. Clean bottom surface of plates.

1. Set plates for structural members on wedges, shims, or setting nuts as required.
2. Weld plate washers to top of baseplate.
3. Snug-tighten anchor rods after supported members have been positioned and plumbed. Do not remove wedges or shims but, if protruding, cut off flush with edge of plate before packing with grout.
4. Promptly pack grout solidly between bearing surfaces and plates so no voids remain. Neatly finish exposed surfaces; protect grout and allow to cure. Comply with manufacturer's written installation instructions for shrinkage-resistant grouts.

C. Maintain erection tolerances of structural steel within AISC 303, "Code of Standard Practice for Steel Buildings and Bridges."

3.3 FIELD CONNECTIONS

A. High-Strength Bolts: Install high-strength bolts according to RCSC's "Specification for Structural Joints Using ASTM A 325 or A 490 Bolts" for type of bolt and type of joint specified.

1. Joint Type: Snug tightened.

B. Weld Connections: Comply with AWS D1.1/D1.1M for tolerances, appearances, welding procedure specifications, weld quality, and methods used in correcting welding work.

1. Comply with AISC 303 and AISC 360 for bearing, alignment, adequacy of temporary connections, and removal of paint on surfaces adjacent to field welds.

3.4 FIELD QUALITY CONTROL

A. Special Inspections: Owner will engage a qualified special inspector to perform the following special inspections:

1. Verify structural-steel materials and inspect steel frame joint details.
2. Verify weld materials and inspect welds.
3. Verify connection materials and inspect high-strength bolted connections.

B. Bolted Connections: Inspect[**and test**] bolted connections according to RCSC's "Specification for Structural Joints Using ASTM A 325 or A 490 Bolts."

C. Welded Connections: Visually inspect field welds according to AWS D1.1/D1.1M.

1. In addition to visual inspection, test and inspect field welds according to AWS D1.1/D1.1M and the following inspection procedures, at testing agency's option:

a. Liquid Penetrant Inspection: ASTM E 165.
b. Magnetic Particle Inspection: ASTM E 709; performed on root pass and on finished weld. Cracks or zones of incomplete fusion or penetration are not accepted.
c. Ultrasonic Inspection: ASTM E 164.
d. Radiographic Inspection: ASTM E 94.

D. Correct deficiencies in Work that test reports and inspections indicate does not comply with the Contract Documents.

END OF SECTION 051200

SECTION 052100 (NHG) - STEEL JOIST FRAMING

PART 1 - GENERAL

1.1 SUMMARY

A. Section Includes:

1. K-series steel joists.
2. LH- and DLH-series long-span steel joists.
3. Joist accessories.

1.2 RELATED DOCUMENTS:

A. Drawings and general provisions of Contract, including General and Supplementary Conditions and Division-1 Specification sections, apply to work of this section.

1.3 DESCRIPTION OF WORK

A. Extent of steel joists iS shown on drawings, including basic layout and type of joists required.

1.4 ACTION SUBMITTALS

A. Product Data: For each type of joist, accessory, and product. Submit manufacturer's specifications and installation instructions for each type of joist and accessories. Include manufacturer's certification that joists comply with SJI "Specifications".

B. Shop Drawings:

1. Include layout, designation, number, type, location, and spacing of joists.
2. Include joining and anchorage details; bracing, bridging, and joist accessories; splice and connection locations and details; and attachments to other construction.

1.5 INFORMATIONAL SUBMITTALS

A. Welding certificates.

B. Manufacturer certificates.

C. Mill Certificates: For each type of bolt.

D. Field quality-control reports.

1.6 DELIVERY, STORAGE AND HANDLING

A. Deliver, store and handle steel joists as recommended in SJI Specifications. Handle and store joists in a manner to avoid deforming members and to avoid excessive stresses.

1.7 QUALITY ASSURANCE

A. Manufacturer Qualifications: A manufacturer certified by SJI to manufacture joists complying with applicable standard specifications and load tables in SJI's "Specifications."

1. Manufacturer's responsibilities include providing professional engineering services for designing special joists to comply with performance requirements.

B. Welding Qualifications: Qualify field-welding procedures and personnel according to AWS D1.1/D1.1M, "Structural Welding Code - Steel."

PART 2 - PRODUCTS

2.1 MATERIALS

A. Steel: Comply with SJI Specifications.

2.2 FABRICATION

A. General: Fabricate steel joists in accordance with SJI Specification.

B. Holes in Chord Members: Provide holes in chord members where shown for securing other work to steel joists; however, deduct area of holes from the area of chord when calculating strength of member.

C. Extended Ends: Provide extended ends on joists where shown, complying with manufacturer's standards and requirements of applicable SJI "Specifications" and load tables.

D. Ceiling extension: Provide ceiling extensions in area having ceilings attached directly to joist bottom chord. Provide either an extended bottom chord element or a separate unit, to suit manufacturer's standards, of sufficient strength to support ceiling construction. Extend ends to within 1/2" of finished wall surface unless otherwise indicated.

E. Bridging: Provide horizontal or diagonal type bridging for "open web" joists, complying with SJI "Specifications".
1. Provide bridging anchors for end of bridging lines terminating at walls or beams.

F. End Anchorage: Provide end anchorages to secure joists to adjacent construction, complying with SJI "Specifications".

2.3 K-SERIES STEEL JOISTS

A. Manufacture steel joists of type indicated according to "Standard Specification for Open Web Steel Joists, K-Series" in SJI's "Specifications," with steel-angle top- and bottom-chord members, underslung ends, and parallel top chord.

B. Steel Joist Substitutes: Manufacture according to "Standard Specifications for Open Web Steel Joists, K-Series" in SJI's "Specifications," with steel-angle or -channel members.

2.4 LONG-SPAN STEEL JOISTS

A. Manufacture steel joists according to "Standard Specification for Longspan Steel Joists, LH-Series and Deep Longspan Steel Joists, DLH-Series" in SJI's "Specifications," with steel-angle top- and bottom-chord members; of joist type and end and top-chord arrangements as indicated.

2.5 PRIMERS

A. Primer: SSPC-Paint 15, or manufacturer's standard shop primer complying with performance requirements in SSPC-Paint 15.

B. Primer: Provide shop primer that complies with Section 099100 "Exterior Painting" and Section 099000 "Interior Painting."

2.6 JOIST ACCESSORIES

A. Bridging: Provide bridging anchors and number of rows of horizontal or diagonal bridging of material, size, and type required by SJI's "Specifications" for type of joist, chord size, spacing, and span. Furnish additional erection bridging if required for stability.

B. Bridging: Schematically indicated. Detail and fabricate according to SJI's "Specifications." Furnish additional erection bridging if required for stability.

C. Bridging: Fabricate as indicated and according to SJI's "Specifications. Furnish additional erection bridging if required for stability.

D. Furnish ceiling extensions, either extended bottom-chord elements or a separate extension unit of enough strength to support ceiling construction. Extend ends to within 1/2 inch of finished wall surface unless otherwise indicated.

E. High-Strength Bolts, Nuts, and Washers: ASTM A 325, Type 1, heavy hex steel structural bolts; ASTM A 563 heavy hex carbon-steel nuts; and ASTM F 436 hardened carbon-steel washers.

   1. Finish: Plain.

F. Furnish miscellaneous accessories including splice plates and bolts required by joist manufacturer to complete joist assembly.

2.7 CLEANING AND SHOP PAINTING

A. Clean and remove loose scale, heavy rust, and other foreign materials from fabricated joists and accessories.

B. Apply one coat of shop primer to joists and joist accessories.

C. Shop priming of joists and joist accessories is specified in Section 099100 "Exterior Painting" and Section 099000 "Interior Painting."

PART 3 - EXECUTION

3.1 INSTALLATION

A. Do not install joists until supporting construction is in place and secured.

B. Install joists and accessories plumb, square, and true to line; securely fasten to supporting construction according to SJI's "Specifications," joist manufacturer's written instructions, and requirements in this Section.

1. Before installation, splice joists delivered to Project site in more than one piece.
2. Space, adjust, and align joists accurately in location before permanently fastening.
3. Install temporary bracing and erection bridging, connections, and anchors to ensure that joists are stabilized during construction.

C. Field weld joists to supporting steel bearing plates and framework (unless noted otherwise on drawings). Coordinate welding sequence and procedure with placement of joists. Comply with AWS requirements and procedures for welding, appearance and quality of welds, and methods used in correcting welding work.

D. Bolt joists to supporting steel framework using carbon-steel bolts.

E. Bolt joists to supporting steel framework using high-strength structural bolts. Comply with RCSC's "Specification for Structural Joints Using ASTM A 325 or ASTM A 490 Bolts" for high-strength structural bolt installation and tightening requirements.

F. Install and connect bridging concurrently with joist erection, before construction loads are applied. Anchor ends of bridging lines at top and bottom chords if terminating at walls or beams.

3.2 FIELD QUALITY CONTROL

A. Testing Agency: Owner will engage a qualified testing agency to perform tests and inspections.

B. Visually inspect field welds according to AWS D1.1/D1.1M.

C. Visually inspect bolted connections.

D. Prepare test and inspection reports.

END OF SECTION 052100

SECTION 052100 (TES) - STEEL JOIST FRAMING

PART 1 - GENERAL

1.1 SUMMARY

A. Section Includes:

1. K-series steel joists.
2. Joist accessories.

1.2 RELATED DOCUMENTS:

A. Drawings and general provisions of Contract, including General and Supplementary Conditions and Division-1 Specification sections, apply to work of this section.

1.3 DESCRIPTION OF WORK

A. Extent of steel joists iS shown on drawings, including basic layout and type of joists required.

1.4 ACTION SUBMITTALS

A. Product Data: For each type of joist, accessory, and product. Submit manufacturer's specifications and installation instructions for each type of joist and accessories. Include manufacturer's certification that joists comply with SJI "Specifications".

B. Shop Drawings:

1. Include layout, designation, number, type, location, and spacing of joists.
2. Include joining and anchorage details; bracing, bridging, and joist accessories; splice and connection locations and details; and attachments to other construction.

1.5 INFORMATIONAL SUBMITTALS

A. Welding certificates.

B. Manufacturer certificates.

C. Mill Certificates: For each type of bolt.

D. Field quality-control reports.

1.6 DELIVERY, STORAGE AND HANDLING

A. Deliver, store and handle steel joists as recommended in SJI Specifications. Handle and store joists in a manner to avoid deforming members and to avoid excessive stresses.

1.7 QUALITY ASSURANCE

A. Manufacturer Qualifications: A manufacturer certified by SJI to manufacture joists complying with applicable standard specifications and load tables in SJI's "Specifications."

1. Manufacturer's responsibilities include providing professional engineering services for designing special joists to comply with performance requirements.

B. Welding Qualifications: Qualify field-welding procedures and personnel according to AWS D1.1/D1.1M, "Structural Welding Code - Steel."

PART 2 - PRODUCTS

2.1 MATERIALS

A. Steel: Comply with SJI Specifications.

2.2 FABRICATION

A. General: Fabricate steel joists in accordance with SJI Specification.

B. Holes in Chord Members: Provide holes in chord members where shown for securing other work to steel joists; however, deduct area of holes from the area of chord when calculating strength of member.

C. Extended Ends: Provide extended ends on joists where shown, complying with manufacturer's standards and requirements of applicable SJI "Specifications" and load tables.

D. Ceiling extension: Provide ceiling extensions in area having ceilings attached directly to joist bottom chord. Provide either an extended bottom chord element or a separate unit, to suit manufacturer's standards, of sufficient strength to support ceiling construction. Extend ends to within 1/2" of finished wall surface unless otherwise indicated.

E. Bridging: Provide horizontal or diagonal type bridging for "open web" joists, complying with SJI "Specifications".
1. Provide bridging anchors for end of bridging lines terminating at walls or beams.

F. End Anchorage: Provide end anchorages to secure joists to adjacent construction, complying with SJI "Specifications".

2.3 K-SERIES STEEL JOISTS

A. Manufacture steel joists of type indicated according to "Standard Specification for Open Web Steel Joists, K-Series" in SJI's "Specifications," with steel-angle top- and bottom-chord members, underslung ends, and parallel top chord.

B. Steel Joist Substitutes: Manufacture according to "Standard Specifications for Open Web Steel Joists, K-Series" in SJI's "Specifications," with steel-angle or -channel members.

2.4 PRIMERS

A. Primer: SSPC-Paint 15, or manufacturer's standard shop primer complying with performance requirements in SSPC-Paint 15.

B. Primer: Provide shop primer that complies with Section 099100 "Exterior Painting" and Section 099000 "Interior Painting."

2.5 JOIST ACCESSORIES

A. Bridging: Provide bridging anchors and number of rows of horizontal or diagonal bridging of material, size, and type required by SJI's "Specifications" for type of joist, chord size, spacing, and span. Furnish additional erection bridging if required for stability.

B. Bridging: Schematically indicated. Detail and fabricate according to SJI's "Specifications." Furnish additional erection bridging if required for stability.

C. Bridging: Fabricate as indicated and according to SJI's "Specifications. Furnish additional erection bridging if required for stability.

D. Furnish ceiling extensions, either extended bottom-chord elements or a separate extension unit of enough strength to support ceiling construction. Extend ends to within 1/2 inch of finished wall surface unless otherwise indicated.

E. High-Strength Bolts, Nuts, and Washers: ASTM A 325, Type 1, heavy hex steel structural bolts; ASTM A 563 heavy hex carbon-steel nuts; and ASTM F 436 hardened carbon-steel washers.

   1. Finish: Plain.

F. Furnish miscellaneous accessories including splice plates and bolts required by joist manufacturer to complete joist assembly.

2.6 CLEANING AND SHOP PAINTING

A. Clean and remove loose scale, heavy rust, and other foreign materials from fabricated joists and accessories.

B. Apply one coat of shop primer to joists and joist accessories.

C. Shop priming of joists and joist accessories is specified in Section 099100 "Exterior Painting" and Section 099000 "Interior Painting."

PART 3 - EXECUTION

3.1 INSTALLATION

A. Do not install joists until supporting construction is in place and secured.

B. Install joists and accessories plumb, square, and true to line; securely fasten to supporting construction according to SJI's "Specifications," joist manufacturer's written instructions, and requirements in this Section.

1. Before installation, splice joists delivered to Project site in more than one piece.
2. Space, adjust, and align joists accurately in location before permanently fastening.
3. Install temporary bracing and erection bridging, connections, and anchors to ensure that joists are stabilized during construction.

C. Field weld joists to supporting steel bearing plates and framework (unless noted otherwise on drawings). Coordinate welding sequence and procedure with placement of joists. Comply with AWS requirements and procedures for welding, appearance and quality of welds, and methods used in correcting welding work.

D. Bolt joists to supporting steel framework using carbon-steel bolts.

E. Bolt joists to supporting steel framework using high-strength structural bolts. Comply with RCSC's "Specification for Structural Joints Using ASTM A 325 or ASTM A 490 Bolts" for high-strength structural bolt installation and tightening requirements.

F. Install and connect bridging concurrently with joist erection, before construction loads are applied. Anchor ends of bridging lines at top and bottom chords if terminating at walls or beams.

3.2 FIELD QUALITY CONTROL

A. Testing Agency: Owner will engage a qualified testing agency to perform tests and inspections.

B. Visually inspect field welds according to AWS D1.1/D1.1M.

C. Visually inspect bolted connections.

D. Prepare test and inspection reports.

END OF SECTION 052100

SECTION 053100 - STEEL DECKING

PART 1 - GENERAL

1.1 SUMMARY

A. Section Includes:

1. Roof deck.
2. Noncomposite form deck.
3. Acoustical Roof Deck (at New Hopkins Gymnasium, where indicated).

1.2 ACTION SUBMITTALS

A. Product Data: For each type of deck, accessory, and product indicated.

B. Shop Drawings:

1. Include layout and types of deck panels, anchorage details, reinforcing channels, pans, cut deck openings, special jointing, accessories, and attachments to other construction.

1.3 INFORMATIONAL SUBMITTALS

A. Welding certificates.

B. Product certificates.

C. Evaluation reports.

D. Field quality-control reports.

1.4 QUALITY ASSURANCE

A. Testing Agency Qualifications: Qualified according to ASTM E 329 for testing indicated.

B. Welding Qualifications: Qualify procedures and personnel according to AWS D1.3, "Structural Welding Code - Sheet Steel."

1.5 DELIVERY, STORAGE, AND HANDLING

A. Protect steel deck from corrosion, deformation, and other damage during delivery, storage, and handling.

B. Stack steel deck on platforms or pallets and slope to provide drainage. Protect with a waterproof covering and ventilate to avoid condensation.

PART 2 - PRODUCTS

2.1 PERFORMANCE REQUIREMENTS

A. AISI Specifications: Comply with calculated structural characteristics of steel deck according to AISI's "North American Specification for the Design of Cold-Formed Steel Structural Members."

2.2 ROOF DECK

A. Roof Deck: Fabricate panels, without top-flange stiffening grooves, to comply with "SDI Specifications and Commentary for Steel Roof Deck," in SDI Publication No. 31, and with the following:

1. Prime-Painted Steel Sheet: ASTM A 1008/A 1008M, Structural Steel (SS), Grade 33 minimum, shop primed with manufacturer's standard baked-on, rust-inhibitive primer.

   a. Color: As Indicated.

2. Deck Profile: As indicated.
3. Profile Depth: As indicated.
4. Design Uncoated-Steel Thickness: As indicated.

2.3 ACOUSTICAL ROOF DECK

A. Acoustical Roof Deck: Fabricate panels, without top-flange stiffening grooves, to comply with SDI RD and with the following:
1. Galvanized- and Shop-Primed Steel Sheet: ASTM A653/A653M, Structural Steel (SS), Grade 40 (275), G60 (Z180) zinc coating; cleaned, pretreated, and primed with manufacturer’s standard baked-on, rust-inhibitive primer.
2. Deck Profile: As indicated.
3. Profile Depth: 4 inches.
4. Design Uncoated-Steel Thickness: 0.0478 inch (1.21 mm).
5. Span Condition: Double span, minimum.
6. Side Laps: Overlapped.
7. Acoustical Perforations: Deck units with manufacturer’s standard perforated vertical webs.
8. Sound-Absorbing Insulation: Manufacturer’s standard premolded roll or strip of glass or mineral fiber.
   a. Factory install sound-absorbing insulation into cells of cellular deck.

2.4 NONCOMPOSITE FORM DECK

A. Noncomposite Form Deck: Fabricate ribbed-steel-sheet noncomposite form-deck panels to comply with "SDI Specifications and Commentary for Noncomposite Steel Form Deck," in SDI Publication No. 31, with the minimum section properties indicated, and with the following:

1. Galvanized-Steel Sheet: ASTM A 653/A 653M, Structural Steel (SS), Grade 60, G60 zinc coating.

2. Profile Depth: As indicated.

3. Design Uncoated-Steel Thickness: As indicated.

2.5 ACCESSORIES

A. General: Provide manufacturer's standard accessory materials for deck that comply with requirements indicated.

B. Mechanical Fasteners: Corrosion-resistant, low-velocity, power-actuated or pneumatically driven carbon-steel fasteners; or self-drilling, self-threading screws.

C. Side-Lap Fasteners: Corrosion-resistant, hexagonal washer head; self-drilling, carbon-steel screws, No. 10 (4.8-mm) minimum diameter.

D. Flexible Closure Strips: Vulcanized, closed-cell, synthetic rubber.

E. Miscellaneous Sheet Metal Deck Accessories: Steel sheet, minimum yield strength of 33,000 psi (230 MPa), not less than 0.0359-inch (0.91-mm) design uncoated thickness, of same material and finish as deck; of profile indicated or required for application.

F. Galvanizing Repair Paint: ASTM A 780 or SSPC-Paint 20 or MIL-P-21035B, with dry film containing a minimum of 94 percent zinc dust by weight.

G. Repair Paint: Manufacturer's standard rust-inhibitive primer of same color as primer.

PART 3 - EXECUTION

3.1 INSTALLATION, GENERAL

A. Install deck panels and accessories according to applicable specifications and commentary in SDI Publication No. 31, manufacturer's written instructions, and requirements in this Section.

B. Place deck panels on supporting frame and adjust to final position with ends accurately aligned and bearing on supporting frame before being permanently fastened. Do not stretch or contract side-lap interlocks.

C. Place deck panels flat and square and fasten to supporting frame without warp or deflection.

D. Cut and neatly fit deck panels and accessories around openings and other work projecting through or adjacent to deck.

E. Provide additional reinforcement and closure pieces at openings as required for strength, continuity of deck, and support of other work.

F. Comply with AWS requirements and procedures for manual shielded metal arc welding, appearance and quality of welds, and methods used for correcting welding work.

G. Mechanical fasteners may be used in lieu of welding to fasten deck. Locate mechanical fasteners and install according to deck manufacturer's written instructions.

H. Pour Stops and Girder Fillers: Weld steel-sheet pour stops and girder fillers to supporting structure according to SDI recommendations unless otherwise indicated.

I. Floor-Deck Closures: Weld steel-sheet column closures, cell closures, and Z-closures to deck, according to SDI recommendations, to provide tight-fitting closures at open ends of ribs and sides of deck.

3.2 FIELD QUALITY CONTROL

A. Testing Agency: Owner will engage a qualified testing agency to perform tests and inspections.

B. Field welds will be subject to inspection.

C. Testing agency will report inspection results promptly and in writing to Contractor and Architect.

D. Remove and replace work that does not comply with specified requirements.

E. Additional inspecting, at Contractor's expense, will be performed to determine compliance of corrected work with specified requirements.

3.3 PROTECTION

A. Galvanizing Repairs: Prepare and repair damaged galvanized coatings on both surfaces of deck with galvanized repair paint according to ASTM A 780 and manufacturer's written instructions.

END OF SECTION 053100

SECTION 054000 - COLD-FORMED METAL FRAMING

PART 1 - GENERAL

1.1 SUMMARY

A. This Section includes the following:
   1. Exterior non-load-bearing wall framing.

1.2 PERFORMANCE REQUIREMENTS

A. Structural Performance: Provide cold-formed metal framing capable of withstanding design loads within limits and under conditions indicated.

   1. Design Loads: As indicated on the structural drawings.

   2. Deflection Limits: Design framing systems to withstand design loads without deflections greater than the following:
      a. Exterior Non-Load-Bearing Framing: Horizontal deflection of 1/360 at locations without masonry veneer and 1/600 of the wall height for locations with masonry veneer.

1.3 SUBMITTALS

A. Product Data: For each type of product and accessory indicated.

B. Shop Drawings: Show layout, spacings, sizes, thicknesses, and types of cold-formed metal framing; fabrication; and fastening and anchorage details, including mechanical fasteners.

   1. For cold-formed metal framing indicated to comply with design loads, include structural analysis data signed and sealed by the qualified professional engineer responsible for their preparation.

C. Welding certificates.

D. Qualification data.

E. Product test reports.

F. Research/evaluation reports.

1.4 QUALITY ASSURANCE

A. Product Tests: Mill certificates or data from a qualified independent testing agency indicating steel sheet complies with requirements.

B. Welding: Qualify procedures and personnel according to AWS D1.3, "Structural Welding Code--Sheet Steel."

C. Fire-Test-Response Characteristics: Where indicated, provide cold-formed metal framing identical to that of assemblies tested for fire resistance per ASTM E 119 by a testing and inspecting agency acceptable to authorities having jurisdiction.

D. AISI Specifications and Standards: Comply with AISI's "North American Specification for the Design of Cold-Formed Steel Structural Members" and its "Standard for Cold-Formed Steel Framing - General Provisions."
   1. Comply with AISI's "Standard for Cold-Formed Steel Framing - Header Design."

PART 2 - PRODUCTS

2.1 MATERIALS

A. Steel Sheet: ASTM A 1003/A 1003M, Structural Grade, Type H, metallic coated, of grade and coating weight as follows:

   1. Grade: As required by structural performance.
   2. Coating: G90 or equivalent.

2.2 EXTERIOR NON-LOAD-BEARING WALL FRAMING

A. Steel Studs: Manufacturer's standard C-shaped steel studs, of web depths indicated, punched, with stiffened flanges, and as follows:

   1. Minimum Base-Metal Thickness: 0.0538 inch (1.37 mm).
   2. Flange Width: 1-5/8 inches (41 mm).

B. Steel Track: Manufacturer's standard U-shaped steel track, of web depths indicated, unpunched, with unstiffened flanges, and same minimum base-metal thickness as steel studs.

C. Vertical Deflection Clips: Manufacturer's standard head clips, capable of accommodating upward and downward vertical displacement of primary structure through positive mechanical attachment to stud web.

D. Single Deflection Track: Manufacturer's single, deep-leg, U-shaped steel track; unpunched, with unstiffened flanges, of web depth to contain studs while allowing free vertical movement, with flanges designed to support horizontal and lateral loads.

2.3 FRAMING ACCESSORIES

A. Fabricate steel-framing accessories from steel sheet, ASTM A 1003/A 1003M, Structural Grade, Type H, metallic coated, of same grade and coating weight used for framing members, unless otherwise indicated.

B. Steel Shapes and Clips: ASTM A 36/A 36M, zinc coated by hot-dip process according to ASTM A 123/A 123M.

C. Anchor Bolts: ASTM F 1554, Grade 36 threaded carbon-steel headless, hooked bolts and carbon-steel nuts; and flat, hardened-steel washers; zinc coated by mechanically deposition according to ASTM B 695, Class 50.

D. Expansion Anchors: Subject to approval from engineer for applications in post-tensioned concrete slabs. Fabricated from corrosion-resistant materials, with capability to sustain, without failure, a load equal to 5 times design load, as determined by testing per ASTM E 488 conducted by a qualified independent testing agency.

E. Power-Actuated Anchors: Subject to approval from engineer for applications in post-tensioned concrete slabs. Fastener system of type suitable for application indicated, fabricated from corrosion-resistant materials, with capability to sustain, without failure, a load equal to 10 times design load, as determined by testing per ASTM E 1190 conducted by a qualified independent testing agency.

F. Mechanical Fasteners: ASTM C 1513, corrosion-resistant-coated, self-drilling, self-tapping steel drill screws.

1. Head Type: Low-profile head beneath sheathing, manufacturer's standard elsewhere.

2.4 MISCELLANEOUS MATERIALS

A. Galvanizing Repair Paint: SSPC-Paint 20 or DOD-P-21035, ASTM A 780.

B. Cement Grout: Portland cement, ASTM C 150, Type I; and clean, natural sand, ASTM C 404. Mix at ratio of 1 part cement to 2-1/2 parts sand, by volume, with minimum water required for placement and hydration.

C. Shims: Load bearing, high-density multimonomer plastic, nonleaching.

D. Sealer Gaskets: Closed-cell neoprene foam, 1/4 inch (6.4 mm) thick, selected from manufacturer's standard widths to match width of bottom track or rim track members.

PART 3 - EXECUTION

3.1 PREPARATION

A. Install load bearing shims or grout between the underside of wall bottom track or rim track and the top of foundation wall or slab at stud or joist locations to ensure a uniform bearing surface on supporting concrete or masonry construction.

3.2 INSTALLATION, GENERAL

A. Install cold-formed metal framing according to AISI's "Standard for Cold-Formed Steel Framing - General Provisions" and to manufacturer's written instructions unless more stringent requirements are indicated.

B. Install cold-formed metal framing and accessories plumb, square, and true to line, and with connections securely fastened.

C. Install framing members in one-piece lengths.

D. Install temporary bracing and supports to secure framing and support loads comparable in intensity to those for which structure was designed. Maintain braces and supports in place,

undisturbed, until entire integrated supporting structure has been completed and permanent connections to framing are secured.

E. Do not bridge building expansion and control joints with cold-formed metal framing. Independently frame both sides of joints.

F. Install insulation, specified in Division 07 Section "Thermal Insulation," in built-up exterior framing members, such as headers, sills, boxed joists, and multiple studs at openings, that are inaccessible on completion of framing work.

G. Fasten hole reinforcing plate over web penetrations that exceed size of manufacturer's standard punched openings.

H. Erection Tolerances: Install cold-formed metal framing level, plumb, and true to line to a maximum allowable tolerance variation of 1/8 inch in 10 feet (1:960) and as follows:

1. Space individual framing members no more than plus or minus 1/8 inch (3 mm) from plan location. Cumulative error shall not exceed minimum fastening requirements of sheathing or other finishing materials.

3.3 EXTERIOR NON-LOAD-BEARING WALL INSTALLATION

A. Install continuous tracks sized to match studs. Align tracks accurately and securely anchor to supporting structure as indicated.

B. Fasten both flanges of studs to top and bottom track, unless otherwise indicated. Space studs as follows:

1. Stud Spacing: 16 inches (406 mm).

C. Set studs plumb, except as needed for diagonal bracing or required for nonplumb walls or warped surfaces and similar requirements.

D. Isolate non-load-bearing steel framing from building structure to prevent transfer of vertical loads while providing lateral support.

1. Install single deflection tracks and anchor to building structure.
2. Connect vertical deflection clips to infill studs and anchor to primary building structure.

E. Install horizontal bridging in wall studs, spaced in rows indicated on Shop Drawings but not more than 48 inches (1220 mm) apart. Fasten at each stud intersection.

1. Top Bridging for Single Deflection Track: Install row of horizontal bridging within 12 inches (305 mm) of single deflection track. Install a combination of flat, taut, steel sheet straps of width and thickness indicated and stud or stud-track solid blocking of width and thickness matching studs. Fasten flat straps to stud flanges and secure solid blocking to stud webs or flanges.

a. Install solid blocking at centers indicated on Shop Drawings.

2. Bridging: Cold-rolled steel channel, welded or mechanically fastened to webs of punched studs.

3. Bridging: Combination of flat, taut, steel sheet straps of width and thickness indicated and stud-track solid blocking of width and thickness to match studs. Fasten flat straps to stud flanges and secure solid blocking to stud webs or flanges.
4. Bridging: Proprietary bridging bars installed according to manufacturer's written instructions.

F. Install miscellaneous framing and connections, including stud kickers, web stiffeners, clip angles, continuous angles, anchors, fasteners, and stud girts, to provide a complete and stable curtain-wall-framing system.

3.4 FIELD QUALITY CONTROL

A. Testing: Owner will engage a qualified independent testing and inspecting agency to perform field tests and inspections and prepare test reports.

B. Field and shop welds will be subject to testing and inspecting.

C. Testing agency will report test results promptly and in writing to Contractor and Architect.

D. Remove and replace work where test results indicate that it does not comply with specified requirements.

E. Additional testing and inspecting, at Contractor's expense, will be performed to determine compliance of replaced or additional work with specified requirements.

3.5 REPAIRS AND PROTECTION

A. Galvanizing Repairs: Prepare and repair damaged galvanized coatings on fabricated and installed cold-formed metal framing with galvanized repair paint according to ASTM A 780 and manufacturer's written instructions.

B. Provide final protection and maintain conditions, in a manner acceptable to manufacturer and Installer, that ensure that cold-formed metal framing is without damage or deterioration at time of Substantial Completion.

END OF SECTION 054000

SECTION 055000 - METAL FABRICATIONS

PART 1 GENERAL

1.1 SUMMARY

A. Work Results:
   1. Miscellaneous steel fabrications.

B. Principal Products:
   1. Steel lintels
   2. Metal ladders
   3. Ladder safety cages
   4. Pipe bollards
   5. Miscellaneous steel supports and framing
   6. Loose bearing and leveling plates.
   7. Mechanical equipment screening assemblies.

C. Products furnished, but not installed, under this section:
   1. Loose steel lintels
   2. Anchor bolts, steel pipe sleeves, slotted-channel inserts, and wedge-type inserts indicated to be cast-into-concrete or built into unit masonry
   3. Steel weld plates and angles for casting into concrete or built into unit masonry

1.2 ADMINISTRATIVE REQUIREMENTS

A. Preinstallation Meeting Attendees and Procedures:
   1. Conduct meeting one week, minimum, before starting Work of this Section.

1.3 ACTION SUBMITTALS

A. Shop Drawings: Show fabrication and installation details for metal fabrications.
   1. Include plans, elevations, sections, and details of metal fabrications and their connections. Show anchorage and accessory items.

B. Delegated-Design Submittal: For installed products indicated to comply with performance requirements and design criteria, including analysis data signed and sealed by the qualified professional engineer responsible for their preparation.

1.4 INFORMATIONAL SUBMITTALS

A. Research Evaluation Reports: Post-installed anchor ICC-ES reports.

B. Qualification Statements: Welders.

1.5 QUALITY ASSURANCE

A. Welding Qualifications:
   1. Steel Fabrications: AWS D1.1.

1.6 FIELD CONDITIONS

A. Existing Conditions: Verify field measurements before fabrication. Show field measurements on Shop Drawings.

PART 2 PRODUCTS

2.1 PERFORMANCE

A. Delegated Design:
   1. Delegate design to fabricator licensed Professional Engineer.
      a. Overhead door support framing.
      b. Elevator hoist and divider beams.
      c. Beam and plate lintels.
      d. Guard rails.
      e. Ladders.
   2. Structural Design Criteria: See Structural Drawings.
   3. Structural Loads: See Structural Drawings.

B. Thermal Movements: Allow for thermal movements from ambient and surface temperature changes acting on exterior metal fabrications by preventing buckling, opening of joints, overstressing of components, failure of connections, and other detrimental effects.
   1. Temperature Change: 120 deg F (67 deg C), ambient; 180 deg F (100 deg C), material surfaces.

2.2 MATERIALS - STEEL

A. Steel Structural Wide Flange Shapes: ASTM A992.

B. Other Steel Structural Shapes: ASTM A36.

C. Steel Plates: ASTM A36 or A572, Grade 50.

D. Steel Pipe: ASTM A53, Grade B.

E. Steel Tubing: ASTM A500, cold-formed steel tubing.

F. Slotted Channel Framing: Cold-formed metal box channels complying with MFMA-4.

G. Steel Sheet: ASTM A653, Grade 33 Structural Quality, G60 galvanizing.
   1. Size of Channels: 1-5/8 by 1-5/8 inches or As indicated.
   2. Material: Galvanized steel, ASTM A 653/A 653M, structural steel, Grade 33, with G90 coating; 0.108-inch nominal thickness.

H. Steel Bolts: ASTM A307, Grade A or B or ASTM F3125, Type 1, Grade A325, heavy hex style.
   1. Finish: Hot-dip galvanized.

I. Steel Nuts: ASTM A563, types appropriate for bolts.
   1. Finish: Hot-dip galvanized.

J. Welding Materials: AWS D1.1, types as required for materials being welded.

2.3 MECHANICAL ROOF SCREENING ASSEMBLIES

A. Basis of Design: CityScapes Envisor unit-attached rooftop equipment screen system, or approved equal.
   1. Materials:
      a. Aluminum extrusions: ASTM B221, aluminum alloy 6061-T5 or 6063-T5.
      b. Aluminum sheet and plate: Rigid aluminum panels complying with ASTM B209; minimum thickness 0.050 inch for solid panels and 0.063 inch for perforated panels.
      c. Support framing: Aluminum plate, shapes, and bars complying with ASTM B221. Provide direct attachment of screening panels to mechanical equipment unless post support, base, or curb condition is indicated on Drawings.
      d. Fasteners: Stainless-steel screws, bolts, nuts, and washers; provide locking devices at bolted connections.
      e. Finish: Factory-applied manufacturer's standard powder-coat system; color as selected by Architect from manufacturer's standard colors unless otherwise indicated.

B. Performance:
   1. Engineer screen assemblies, framing, and attachments to resist wind, snow, suction, and uplift loads indicated on Structural Drawings and required by governing building codes without damage, permanent deformation, or impairment of mechanical equipment operation.
   2. Layout: Coordinate clearances, panel heights, access panels, service doors, electrical disconnects, ductwork, piping, parapets, and other obstructions with approved mechanical equipment submittals and the Architectural, Mechanical, and Structural Drawings.

2.4 MISCELLANEOUS MATERIALS

A. Post-Installed Anchors: Torque-controlled expansion and chemical anchors.
   1. Material: Stainless steel.

B. Concrete Embedment Anchors: Wedge type for adjustable bolt location; malleable iron or cast steel. Supply bolts, washers, and shims with ASTM F2329 hot-dip galvanized finish.

C. Shop Primer: primer specified in Section 099000.

D. Separation Coating: Bituminous paint; SSPC-Paint 12.

E. Galvanizing Repair Paint: High-zinc-dust-content paint complying with SSPC-Paint 20 and compatible with paints specified to be used over it.

F. Bituminous Paint: Cold-applied asphalt emulsion complying with ASTM D 1187.

G. Nonshrink, Nonmetallic Grout: Factory-packaged, nonstaining, noncorrosive, nongaseous grout complying with ASTM C 1107. Provide grout specifically recommended by manufacturer for interior and exterior applications.

H. Concrete: Comply with requirements in Division 03 Section "Cast-in-Place Concrete" for normal-weight, air-entrained, concrete with a minimum 28-day compressive strength of 3000 psi (20 MPa).

2.5 FABRICATION - GENERAL

A. Fit and shop assemble items in largest practical sections, for delivery to site.

B. Fabricate items with joints tightly fitted and secured.

C. Seal joined members by continuous welds.

D. Grind exposed joints flush and smooth with adjacent finish surface. Make exposed joints butt tight, flush, and hairline. Ease exposed edges to uniform small radius.

E. Exposed Welded Joints: NOMMA Guideline 1 Joint Finish 2.

F. Exposed Mechanical Fastenings: Flush countersunk screws or bolts; unobtrusively located; consistent with design of component, except where specifically noted otherwise.

G. Supply components required for anchorage of fabrications. Fabricate anchors and related components of same material and finish as fabrication, except where specifically noted otherwise.

H. General: Provide steel framing and supports not specified in other Sections as needed to complete the Work.

I. Tolerances:
   1. Squareness: 1/8 inch maximum difference in diagonal measurements.
   2. Face Offset: 1/16 inch, maximum.
   3. Misalignment of Adjacent Members: 1/16 inch, maximum.
   4. Bow: 1/8 inch in 48 inches, maximum.
   5. Plane: 1/8 inch deviation in 48 inches, maximum.

2.6 FABRICATION - LINTELS

A. Loose Steel Lintels: Steel sections, size and configuration shown on Drawings, length for minimum 8 inch bearing both sides of opening.

B. Finishes:
   1. Exterior Walls: Galvanized.

2.7 FABRICATION - BOLLARDS

A. Bollards: Schedule 40 steel pipe with steel plate cap.
   1. Diameter: 6 inches.
   2. Fill metal-capped bollards with concrete. Cure concrete minimum 7 days before installation.
   3. Anchorage: Baseplates welded to bollards and drilled for bolting to substrate.
   4. Finish: Zinc-rich primer.

B. Concrete Fill: 3,000 psi concrete specified in Section 033000.

2.8 FABRICATION - LADDERS

A. Contractor Option: Manufactured or shop-fabricated ladders.

B. Elevator Pit Ladders: ASME A17/CSA B44.

C. Fabricated Vertical Ladders: ANSI ASC A14.3, steel welded construction. Provide bottom and wall attachment angles spaced maximum 5 ft o/c.
   1. Side Rails: 3/8 by 2 inches spaced 16 inches.
   2. Rungs: One inch steel bars let into side rails and spaced 12 inches on center.
   3. Interior Ladders: Shop primer.

2.9 FABRICATION - MISCELLANEOUS STRUCTURAL SUPPORTS

A. Delegated Design: Supports fabricated from structural steel shapes coordinated with supported item manufacturer anchorage requirements and building structure.

B. Toilet Partition Supports: Continuous steel beam supported and braced by angles; shop primer finish.

C. Operable Partition Supports: Continuous steel beam supported and braced by angles; shop primer finish.

D. Other Supports: Structural steel sections shown on Drawings and to support applied loads; shop primer finish.

2.10 LOOSE BEARING AND LEVELING PLATES

A. Provide loose bearing and leveling plates for steel items bearing on masonry or concrete construction. Drill plates to receive anchor bolts and for grouting.

2.11 STEEL WELD PLATES AND ANGLES

A. Provide steel weld plates and angles not specified in other Sections, for items supported from concrete construction as needed to complete the Work. Provide each unit with no fewer than two integrally welded steel strap anchors for embedding in concrete.

2.12 STEEL FINISHES

A. Prepare surfaces to be primed per SSPC SP 2.

B. Clean surfaces of rust, scale, grease, and foreign matter before finishing.

C. Do not prime surfaces in direct contact with concrete or where field welding is required.

D. Prime paint items in fabrication shop with two coats except where galvanizing is specified.

E. Galvanizing: ASTM A123; hot-dip galvanize after fabrication.

F. Galvanizing for Fasteners, Connectors, and Anchors:
   1. Hot-Dip Galvanizing: ASTM A153.
   2. Mechanical Galvanizing: ASTM B695; Class 50 minimum.

PART 3 EXECUTION

3.1 PREPARATION

A. Clean and strip primed steel items to bare metal where site welding is required.

B. Supply setting templates for items required to be cast into concrete or embedded in masonry.

C. Apply separation coating to aluminum surfaces contacting dissimilar metals, concrete, and masonry.

3.2 INSTALLATION

A. Install items plumb and level, accurately fitted, free from distortion or defects.

B. Separate dissimilar exterior metals with non-absorptive gaskets.

C. Make provisions for erection stresses. Install temporary bracing to maintain alignment, until permanent bracing and attachments are installed.

D. Fasten Work rigidly and securely to supports.

E. Field weld components shown on Shop Drawings per AWS D1.1.

F. Obtain Architect approval before site cutting or making unanticipated adjustments.

G. After erection, touch up welds, abrasions, and damaged finishes with prime paint or zinc-rich paint to match shop finishes.

H. Miscellaneous Framing and Supports:
   1. Attach supports rigidly and securely to building structural elements.
   2. Brace overhead support framing to prevent movement of supported items.

I. Mechanical Equipment Screening Assemblies:
   1. Install screening assemblies in accordance with manufacturer's written instructions, approved shop drawings, and requirements indicated on Drawings. Keep screen lines straight, plumb, level, and aligned with adjacent construction.
   2. Coordinate attachments, supports, clearances, and access requirements with mechanical equipment, roof construction, architectural layouts, and structural framing before fabrication and installation.
   3. Do not attach screening assemblies to mechanical equipment, roof framing, or other substrates until attachment locations and loads have been coordinated with the Architectural, Mechanical, and Structural Drawings and approved shop drawings.
   4. Provide isolation between aluminum components and dissimilar metals, concrete, masonry, or other incompatible materials.
   5. Maintain required access to equipment service panels, doors, disconnects, valves, and other service points.

J. Bollards:
   1. Anchor bollards with anchor bolts.
   2. Fill bollards with concrete.
   3. Install plastic sleeves over bollards.

K. Install bearing and leveling plates.

3.3 INSTALLATION TOLERANCES

A. Plumb: 1/4 inch deviation maximum, either per story or every 12 ft in height, whichever is greater; non-cumulative.

B. Alignment: 1/8 inch offset deviation, maximum.

C. Position: 1/4 inch deviation, maximum.

3.4 ADJUSTING AND CLEANING

A. Touchup Painting: Immediately after erection, clean field welds, bolted connections, and abraded areas. Paint uncoated and abraded areas with the same material as used for shop painting to comply with SSPC-PA 1 for touching up shop-painted surfaces.

B. Galvanized Surfaces: Clean field welds, bolted connections, and abraded areas and repair galvanizing to comply with ASTM A 780.

END OF SECTION 055000

SECTION 055100 - METAL STAIRS

PART 1 - GENERAL

1.1 SUMMARY

A. Section Includes:
1. Preassembled interior and exterior steel stairs.
2. Steel bar-grating treads and landings.
3. Slip-resistant serrated bearing surfaces, abrasive nosings, and closed steel risers
4. Steel tube guards and handrails attached to metal stairs.
5. Steel tube handrails attached to adjacent walls.
6. Hot-dip galvanizing and preparation of exterior steel stairs for field-applied exterior painting.

B. Related Sections:
1. Division 05 Section “Metal Fabrications” for miscellaneous supports and framing associated with stairs and landings.
2. Division 05 Section “Pipe and Tube Railings” for railings not attached to metal stairs or adjacent walls.
3. Division 09 Section 099113 “Exterior Painting” for field-applied coating of exterior stairs, guards, and handrails.

1.2 PERFORMANCE REQUIREMENTS

A. Delegated Design: Design metal stairs, including comprehensive engineering analysis by a qualified professional engineer, using performance requirements and design criteria indicated.

B. Structural Performance of Stairs: Metal stairs shall withstand the effects of gravity loads and the following loads and stresses within limits and under conditions indicated.

1. Uniform Load: 100 lbf/sq. ft. (4.79 kN/sq. m).
2. Concentrated Load: 300 lbf (1.33 kN) applied on an area of 4 sq. in. (2580 sq. mm).
3. Uniform and concentrated loads need not be assumed to act concurrently.
4. Stair Framing: Capable of withstanding stresses resulting from railing loads in addition to loads specified above.
5. Limit deflection of treads, platforms, and framing members to L/240 or 1/4 inch (6.4 mm), whichever is less.

C. Structural Performance of Railings: Railings shall withstand the effects of gravity loads and the following loads and stresses within limits and under conditions indicated.
1. Handrails and Top Rails of Guards: 50 plf uniform load or 200 lb concentrated load, applied in any direction, per IBC; loads need not act concurrently.
2. Guard Infill: 50 lb applied over 1 sq ft area (any location), not acting concurrently with top-rail loads..

D. Seismic Performance: Metal stairs shall withstand the effects of earthquake motions determined according to ASCE/SEI 7.

1. Component Importance Factor is 1.5.

1.3 SUBMITTALS

A. Product Data: For metal stairs and the following:
   1. Steel bar-grating treads and landing panels.
   2. Closed steel riser plates.
   3. Grating attachment clips, carrier plates, and fasteners.
   4. Slip resistant tread and landing surfaces.
   5. Abrasive stair nosings.
   6. Galvanizing repair materials and coating-system materials for exterior stairs.

B. Shop Drawings:
   1. Submit shop drawings for stairs , landings and railings.
   2. Include plans, elevations and details.
   3. Show connection and accessory items, indicate field welds.
   4. Show locations for anchor and bolt installation.
   5. Show bearing-bar direction, grating panel sizes, support locations, attachment methods, edge banding, abrasive nosings, and closed riser plates.
   6. Show maximum clear openings through grating and between stair components.

C. Samples for Initial Selection: For products involving selection of color, texture, or design.

D. Exterior Coating-System Submittal: Submit documentation confirming compatibility of galvanizing, pretreatment, primer, intermediate coats, and finish coats specified in Section 099113 “Exterior Painting.”

1.4 QUALITY ASSURANCE

A. NAAMM Stair Standard: Comply with "Recommended Voluntary Minimum Standards for Fixed Metal Stairs" in NAAMM AMP 510, "Metal Stairs Manual," for class of stair designated, unless more stringent requirements are indicated.

   1. Preassembled Stairs: Commercial class.

B. Regulatory Requirements:
   1. Building Code: Comply with **IBC** 2021 Chapter 10 for stairs, guards, and handrails (and Chapter 16 for loads)
   2. Accessibility:
      a. American Disabilities Act Accessibility Guidelines (ADAAG) for Buildings and Facilities; Final Guidelines and revisions.
      b. Comply with applicable requirements of ANSI A 117.1 for accessibility.

1.5 COORDINATION

A. Coordinate hot-dip galvanizing, galvanizing repair, surface preparation, primers, and field-applied exterior coatings. Comply with coating manufacturers’ written requirements to provide a compatible and complete coating system.

B. Coordinate installation of anchorages for metal stairs. Furnish setting drawings, templates, and directions for installing anchorages, including sleeves, concrete inserts, anchor bolts, and items with integral anchors, that are to be embedded in concrete or masonry. Deliver such items to Project site in time for installation.

C. Coordinate grating tread and landing dimensions, support framing, nosings, closed risers, edge banding, and attachment methods. Coordinate fabrication to provide uniform riser heights and tread depths and to permit free drainage without water retention.

PART 2 - PRODUCTS

2.1 METALS

A. Metal Surfaces, General: Provide materials with smooth, flat surfaces unless otherwise indicated. For components exposed to view in the completed Work, provide materials without seam marks, roller marks, rolled trade names, or blemishes.

B. Recycled Content of Steel Products: Provide products with average recycled content of steel products so postconsumer recycled content plus one-half of preconsumer recycled content is not less than 25 percent.

C. Steel Plates, Shapes, and Bars: ASTM A 36/A 36M.

D. Steel Tubing: ASTM A 500 (cold formed) or ASTM A 513.

E. Steel Bars for Grating Treads: ASTM A 36/A 36M or steel strip, ASTM A 1011/A 1011M or ASTM A 1018/A 1018M.

F. Wire Rod for Grating Crossbars: ASTM A 510 (ASTM A 510M).

G. Uncoated, Cold-Rolled Steel Sheet: ASTM A 1008/A 1008M, either commercial steel, Type B, or structural steel, Grade 25 (Grade 170), unless another grade is required by design loads; exposed.

H. Uncoated, Hot-Rolled Steel Sheet: ASTM A 1011/A 1011M, either commercial steel, Type B, or structural steel, Grade 30 (Grade 205), unless another grade is required by design loads.

2.2 MISCELLANEOUS MATERIALS

A. Provide anchors for embedding units in concrete, either integral or applied to units, as standard with manufacturer.

B. Fasteners: Provide hot-dip galvanized steel fasteners compatible with galvanized stair components, except provide Type 304 or 316 stainless steel fasteners at exposed exterior, wet, or corrosive locations where recommended by the stair manufacturer. Isolate dissimilar metals to prevent galvanic action.

C. Post-Installed Anchors: Torque-controlled expansion or adhesive anchors with ICC-ES evaluation for cracked concrete (AC193/AC308). Design to ACI 318 Chapter 17.

1. Interior / Dry Locations: Zinc-plated carbon steel.

2. Exterior / Wet / Corrosive: Type 304/316 stainless steel.

D. Shop Primers: Provide primers that comply with Division 09 painting Sections.

E. Universal Shop Primer: Fast-curing, lead- and chromate-free, universal modified-alkyd primer complying with MPI#79 and compatible with topcoat.

2.3 FABRICATION, GENERAL

A. Provide complete stair assemblies, including metal framing, hangers, struts, railings, clips, brackets, bearing plates, and other components necessary to support and anchor stairs and landing platforms on supporting structure.
   1. Join components by welding unless otherwise indicated.
   2. Use connections that maintain structural value of joined pieces.
   3. Fabricate exterior grating treads and landing platforms to drain freely and prevent water retention. Orient bearing bars and provide supports, banding, clips, and fasteners as required for structural performance and secure attachment.
   4. Provide banded edges at exposed grating edges and at openings.
   5. Fabricate grating and adjacent components so openings do not exceed applicable accessibility and building-code limitations.
   6. Provide grating with openings that do not permit passage of a 1/2-inch-diameter sphere.
   7. Orient elongated openings so the long dimension is perpendicular to the predominant direction of travel.
   8. Fabricate closed risers continuously across the full clear width of each stair tread.
   9. Fabricate exterior stair components to minimize horizontal ledges, open joints, crevices, and enclosed spaces that may retain water.

B. Preassembled Stairs: Assemble stairs in shop to greatest extent possible. Disassemble units only as necessary for shipping and handling limitations.

C. Cut, drill, and punch metals cleanly and accurately. Remove burrs and ease edges. Remove sharp or rough areas on exposed surfaces.

D. Form bent-metal corners to smallest radius possible without impairing work.

E. Weld connections to comply with the following:

   1. Use materials and methods that minimize distortion and develop strength and corrosion resistance of base metals.
   2. Obtain fusion without undercut or overlap.
   3. Remove welding flux immediately.
   4. Weld exposed corners and seams continuously unless otherwise indicated.
   5. At exposed connections, finish exposed welds to comply with NOMMA's "Voluntary Joint Finish Standards" for Type 3 welds: partially dressed weld with spatter removed

F. Form exposed connections with hairline joints, flush and smooth, using concealed fasteners where possible. Locate joints where least conspicuous.

G. Fabricate joints that will be exposed to weather in a manner to exclude water. Provide weep holes where water may accumulate.

2.4 STEEL-FRAMED STAIRS

A. Standard Pre-Manufactured Stair and Rail System
   1. Manufacturer’s custom prefabricated, pre-engineered stair and landing system consisting of steel stringers, closed steel risers, steel bar-grating treads and landings, supports, fasteners, guards, and handrails.

a. Manufacturers: Subject to compliance with requirements, available manufacturers offering products that may be incorporated into the Work include, but are not limited to, the following:
   1) American Stair, Inc
   2) Sharon Companies Ltd. (The).
   3) Alfab, Inc.

2. Support System
   a. Provide landing support with manufacturer's standard system. Comply with details indicated on Drawings.
   b. Shelf angle landing supports.

B. Alternating Tread Stairs:
1. Use Limitation: Alternating-tread stairs are for equipment access only where permitted by IBC and shall not serve as part of a required means of egress in this project. Provide handrails on both sides.
2. Construct alternating tread stairs to sizes and arrangements indicated, to 68° angle.
3. Join pieces by welding.
4. Components:
   a. Stringers: Structural steel channels or plates, or combination of both.
   b. Treads: Not less than 12 gage diamond checkered steel plate.
   c. Handrail: Steel tube rail welded to stringers. Extend handrail at top landing as indicated.
5. Provide necessary fittings and brackets for installation.

6. Acceptable products and manufacturers: Equivalent to Alternating Tread Stair by Lapeyre Stair, Inc. or approved equal.

C. Steel Bar-Grating Treads:
1. Provide welded steel bar-grating stair treads, sized and reinforced to comply with specified structural-performance requirements.
2. Bearing Surface: Serrated, slip-resistant bearing bars suitable for wet exterior pedestrian use.
3. Provide banded ends and manufacturer's standard welded carrier plates drilled for attachment to stair stringers.
4. Provide abrasive nosing across the full clear width of each tread. Nosing shall be securely attached, exterior rated, and visually contrasting with the tread surface.
5. Provide closed steel riser plate at each tread. Extend riser plate continuously from the underside or rear edge of the abrasive nosing down to the tread below so no open riser occurs.
6. Form riser plates from steel sheet not less than 14 gage unless a greater thickness is required by delegated design. Securely weld or mechanically fasten riser plates to the stair assembly. Fabricate and attach riser plates to permit drainage and avoid enclosed spaces or pockets that retain water.
7. Configure risers and nosings to comply with indicated stair geometry and applicable accessibility requirements. Do not permit projections, sharp edges, or variations in required riser height or tread depth.
8. Provide grating openings within limits permitted for the installed orientation and location. Coordinate bearing-bar spacing and crossbar spacing with applicable accessibility requirements.
9. Hot-dip galvanize steel grating treads, carrier plates, riser plates, and associated steel attachments after fabrication. Provide abrasive nosings with manufacturer's exterior-rated corrosion-resistant finish.

D. Steel Bar Grating Landings:
   1. Provide welded steel bar-grating landing panels supported on structural-steel framing.
   2. Bearing Surface: Serrated, slip-resistant bearing bars suitable for wet exterior pedestrian use.
   3. Orient and support grating panels to comply with structural-performance requirements and applicable accessibility limitations.
   4. Provide banding at exposed panel edges, openings, and changes in direction.
   5. Secure panels with manufacturer's heavy-duty clips or bolted attachments that prevent movement, rocking, or displacement.
   6. Provide 4-inch-high toe plates at open landing edges where indicated or required.
   7. Hot-dip galvanize grating panels, support framing, banding, toe plates, clips, and fasteners after fabrication, as applicable.

2.5 STAIR RAILINGS

A. Stair Railings:

   1. Steel Tube Railings: Fabricate railings to comply with requirements indicated for design, dimensions, details, finish, and member sizes, including wall thickness of tube, post spacings, and anchorage, but not less than that needed to withstand indicated loads.

   2. Manufactures Standard 42 inch (1067 mm) height guard rail system with 34 inch (864 mm) ADA Grab and with 42 inch (1067 mm) guardrails at landings and openings.
      a. Rails and Posts: 1-1/2-inch- (41-mm-) diameter] top and bottom rails and 1-1/2-inch- (38-mm-) diameter posts.
      b. Picket Infill: 1/2-inch- (13-mm-) square pickets spaced less than 4 inches (100 mm) clear.

   3. Wall Handrails: Match stair handrails. Provide manufacturer's standard pressed steel wall brackets with anchors suitable for supporting construction.

B. Welded Connections: Fabricate railings with welded connections. Cope components at connections to provide close fit, or use fittings designed for this purpose. Weld all around at connections, including at fittings.

   1. Finish welds to comply with NOMMA's "Voluntary Joint Finish Standards" for Type 3 welds: partially dressed weld with spatter removed

C. Form changes in direction of railings by bending or by inserting prefabricated elbow fittings.

D. Form curves by bending members in jigs to produce uniform curvature without buckling.

E. Close exposed ends of railing members with prefabricated end fittings.

F. Provide wall returns at ends of wall-mounted handrails.

G. Brackets, Flanges, Fittings, and Anchors: Provide wall brackets, end closures, flanges, miscellaneous fittings, and anchors for interconnecting components and for attaching to other work.

   1. Connect posts to stair framing by direct welding.

H. Fillers: Provide fillers made from steel plate, or other suitably crush-resistant material, to transfer wall bracket loads through wall finishes. Size fillers to suit wall finish thicknesses.

2.6 FINISHES

A. Comply with NAAMM's "Metal Finishes Manual for Architectural and Metal Products" for recommendations for applying and designating finishes.

B. Finish metal stairs after assembly.

C. Galvanizing: Hot-dip galvanize exterior stairs, stringers, framing, landings, guards, handrails, brackets, fasteners, grating treads, grating landing panels, closed riser plates, carrier plates, clips, and associated exterior steel items after fabrication in accordance with ASTM A 123/A 123M and ASTM A 153/A 153M, as applicable. Vent and drain tubular and enclosed members as required for galvanizing. Prepare galvanized surfaces to receive the field-applied coating system specified in Section 099113 “Exterior Painting.”

D. Preparation for Shop Priming: Prepare uncoated ferrous-metal surfaces to comply with SSPC-SP 6/NACE No. 3, "Commercial Blast Cleaning "

E. Apply shop primer to uncoated surfaces of metal stair components. Comply with SSPC-PA 1, "Paint Application Specification No. 1: Shop, Field, and Maintenance Painting of Steel," for shop painting.

F. Exterior Painted Finish: Field-paint galvanized exterior stairs, guards, handrails, and associated components in accordance with Section 099113 “Exterior Painting.” Provide galvanizing-compatible pretreatment, primer, and finish coats. Color shall be as selected by Architect.

G. Concealed Surfaces: Coat steel surfaces concealed by concrete or in contact with dissimilar materials as required to prevent corrosion and galvanic action.

PART 3 - EXECUTION

3.1 INSTALLATION

A. Fastening to In-Place Construction: Provide anchorage devices and fasteners where necessary for securing metal stairs to in-place construction. Include threaded fasteners for concrete and masonry inserts, through-bolts, lag bolts, and other connectors.

B. Verification of Conditions: Verify that conditions of substrates previously installed under other sections or contracts are acceptable for product installation in accordance with manufacturer’s instructions prior to metal stair and railing installation

C. Cutting, Fitting, and Placement: Perform cutting, drilling, and fitting required for installing metal stairs. Set units accurately in location, alignment, and elevation, measured from established lines and levels and free of rack.

D. Install metal stairs by welding stair framing to steel structure or to weld plates cast into concrete unless otherwise indicated.

E. Fit exposed connections accurately together to form hairline joints. Weld connections that are not to be left as exposed joints. Do not weld, cut, or abrade surfaces of exterior units that have been hot-dip galvanized after fabrication.

F. Field Welding: Comply with requirements for welding in "Fabrication, General" Article.

G. Install grating treads and landing panels securely on supporting framing using indicated or approved attachment systems.
   1. Install panels level, flush, and free from rocking, looseness, or excessive deflection.
   2. Install abrasive nosings in straight, continuous alignment across the full width of each tread.
   3. Install closed riser plates continuously between adjacent treads without gaps that create open risers.
   4. Tighten mechanical attachments to prevent displacement while permitting removal where indicated.
   5. Repair damaged galvanizing after installation in accordance with ASTM A 780.

H. Install exterior stairs so water drains freely from treads, landings, framing members, and connections. Correct conditions that permit ponding or water entrapment.

3.2 INSTALLING RAILINGS

A. Adjust railing systems before anchoring to ensure matching alignment at abutting joints. Space posts at spacing indicated or, if not indicated, as required by design loads. Plumb posts in each direction. Secure posts and rail ends to building construction as follows:

   1. Attach handrails to wall with wall brackets. Use type of bracket with predrilled hole for exposed bolt anchorage.
   2. For concrete and solid masonry anchorage, use drilled-in expansion shields and hanger or lag bolts
   3. For hollow masonry anchorage, use toggle bolts.

3.3 ADJUSTING AND CLEANING

A. Exterior Coating Touchup: After erection and galvanizing repair, prepare and coat field welds, bolted connections, damaged areas, and other exposed surfaces in accordance with Section 099113 “Exterior Painting.” Blend repaired areas with adjacent finished surfaces.

B. Galvanized Surfaces: Clean and repair damaged galvanizing, field welds, and abraded areas in accordance with ASTM A 780 before applying the specified exterior coating system.

END OF SECTION 055100

SECTION 055213 - PIPE AND TUBE RAILINGS

PART 1 - GENERAL

1.1 RELATED DOCUMENTS

A. Drawings and general provisions of the Contract, including General and Supplementary Conditions and Division 01 Specification Sections, apply to this Section.

1.2 SUMMARY

A. Section Includes:

1. Aluminum and steel tube guardrails and handrails not attached to prefabricated metal stairs.
2. Wall mounted handrails at ramps, landings, and platforms not part of stair assemblies.
3. Accessories, anchorage devices and fittings for complete railing assemblies.

B. Related Sections:

1. Section 055000 “Metal Fabrications” – for miscellaneous supports, angle frames, and embedded plates associated with railings.
2. Section 055100 “Metal Stairs” – for stair stringers, treads, and railings integral to pre-assembled stair systems.
3. Section 099123 “Painting” – for field painting of galvanized or primed steel.

1.3 COORDINATION

A. Coordinate selection of shop primers with topcoats to be applied over them. Comply with paint and coating manufacturers' written recommendations to ensure that shop primers and topcoats are compatible with one another.

B. Coordinate installation of anchorages for railings. Furnish setting drawings, templates, and directions for installing anchorages, including sleeves, concrete inserts, anchor bolts, and items with integral anchors, that are to be embedded in concrete or masonry. Deliver such items to Project site in time for installation.

C. Code Requirements: Comply with IBC 2021 Chapter 10 for guards and handrails and ICC A117.1-2017 for accessibility.

1. Guard height: 42 inches minimum.

2. Handrail height: 34–38 inches above stair nosings/ramp surfaces; provide returns at ends.

3. Graspability: Circular 1-1/4 to 2 inches OD (or noncircular per IBC).

4. Openings: Infill to resist a 4-inch sphere.of primary framing.

1.4 ACTION SUBMITTALS

A. Product Data:

1. Manufacturer's product lines of mechanically connected railings.
2. Fasteners.
3. Post-installed anchors.
4. Handrail brackets.
5. Nonshrink, nonmetallic grout.
6. Metal finishes.

B. Shop Drawings: Include plans, elevations, sections, details, and attachments to other work.

C. Samples for Initial Selection: For products involving selection of color, texture, or design, including mechanical finishes.

1.5 INFORMATIONAL SUBMITTALS

A. Mill Certificates: Signed by manufacturers of stainless steel products, certifying that products furnished comply with requirements.

1.6 QUALITY ASSURANCE

A. Welding Qualifications: Qualify procedures and personnel in accordance with the following:

1. AWS D1.2/D1.2M, "Structural Welding Code - Aluminum."

1.7 DELIVERY, STORAGE, AND HANDLING

A. Protect mechanical finishes on exposed surfaces of railings from damage by applying a strippable, temporary protective covering before shipping.

1.8 FIELD CONDITIONS

A. Field Measurements: Verify actual locations of walls and other construction contiguous with railings by field measurements before fabrication.

PART 2 - PRODUCTS

2.1 PERFORMANCE REQUIREMENTS

A. Structural Performance: Design and fabricate railings to resist the following loads in accordance with IBC 2021 and AISC 360.

1) Handrails and Top Rails of Guards: 50 lbf/ft (0.73 kN/m) uniform load **or** 200 lbf (0.89 kN) concentrated load, applied in any direction.
2) Guard Infill: 50 lbf (0.22 kN) applied horizontally on a 1 sq ft (0.093 sq m) area. Loads need not act concurrently.

2.2 METALS, GENERAL

A. Metal Surfaces, General: Provide materials with smooth surfaces, without seam marks, roller marks, rolled trade names, stains, discolorations, or blemishes.

B. Brackets, Flanges, and Anchors: Cast or formed metal of same type of material and finish as supported rails unless otherwise indicated.

1. Provide type of bracket with flange tapped for concealed anchorage to threaded hanger bolt and that provides 1-1/2-inch clearance from inside face of handrail to finished wall surface.

2.3 STEEL AND IRON

A. Tubing: ASTM A 500 (cold formed).

B. Pipe: ASTM A 53/A 53M, Type F or Type S, Grade A, Standard Weight (Schedule 40), unless another grade and weight are required by structural loads.

C. Plates, Shapes, and Bars: ASTM A 36/A 36M.

2.4 ALUMINUM RAILINGS

A. Source Limitations: Obtain each type of railing from single source from single manufacturer.

B. Aluminum, General: Provide alloy and temper recommended by aluminum producer and finisher for type of use and finish indicated, and with not less than the strength and durability properties of alloy and temper designated below for each aluminum form required.

C. Extruded and Tubing: ASTM B221, Alloy 6063-T5/T52.

D. Extruded Structural Pipe and Round Tubing: ASTM B429/B429M, Alloy 6063-T6.

1. Provide Standard Weight (Schedule 40) pipe unless otherwise indicated.

2.5 FASTENERS

A. Fastener Materials:

1. Aluminum Railing Components: Type 304 stainless steel fasteners.
2. Finish exposed fasteners to match appearance, including color and texture, of railings
3. Un-galvanized-Steel Railings: Plated steel fasteners complying with ASTM B 633 or ASTM F 1941 (ASTM F 1941M), Class Fe/Zn 5 for zinc coating.
4. Hot-Dip Galvanized Railings: Type 304 stainless-steel or hot-dip zinc-coated steel fasteners complying with ASTM A 153/A 153M or ASTM F 2329 for zinc coating

B. Fasteners for Anchoring Railings to Other Construction: Select fasteners of type, grade, and class required to produce connections suitable for anchoring railings to other types of construction.

C. Fasteners for Interconnecting Railing Components:

1. Provide concealed fasteners for interconnecting railing components and for attaching them to other work, unless otherwise indicated.
2. Provide concealed fasteners for interconnecting railing components and for attaching them to other work, unless exposed fasteners are unavoidable or are the standard fastening method for railings indicated.

D. Post-Installed Anchors: Fastener systems with working capacity greater than or equal to the design load, according to an evaluation report acceptable to authorities having jurisdiction, based on ICC-ES AC193.

1. Material for Exterior Locations and Where Stainless Steel Is Indicated: Alloy Group 1 stainless steel bolts, ASTM F593, and nuts, ASTM F594.

2.6 MISCELLANEOUS MATERIALS

A. Handrail Brackets: Cast aluminum, center of handrail 1-1/2 inches from wall.

B. Welding Rods and Bare Electrodes: Select in accordance with AWS specifications for metal alloy welded.

1. For aluminum railings, provide type and alloy as recommended by producer of metal to be welded and as required for color match, strength, and compatibility in fabricated items.

C. Etching Cleaner for Galvanized Metal: Complying with MPI#25.

D. Galvanizing Repair Paint: High-zinc-dust-content paint, complying with SSPC-Paint 20 and compatible with paints specified to be used over it.

E. Universal Shop Primer: Fast-curing, lead- and chromate-free, universal modified-alkyd primer complying with MPI#79 and compatible with topcoat.

1. Use primer containing pigments that make it easily distinguishable from zinc-rich primer.

F. Epoxy Zinc-Rich Primer: Complying with MPI#20 and compatible with topcoat.

G. Epoxy Intermediate Coat: Complying with MPI #77 and compatible with primer and topcoat.

H. Polyurethane Topcoat: Complying with MPI #72 and compatible with undercoat.

I. Nonshrink, Nonmetallic Grout: Factory-packaged, nonstaining, noncorrosive, nongaseous grout, complying with ASTM C1107/C1107M. Provide grout specifically recommended by manufacturer for interior and exterior applications.

2.7 FABRICATION

A. General: Fabricate railings to comply with requirements indicated for design, dimensions, member sizes and spacing, details, finish, and anchorage, but not less than that required to support structural loads.

1. Railings attached to or integral with pre-manufactured metal stairs are specified in Section 055000. Fabricate all other railing systems under this Section, coordinated with embedded plates and supports provided under Section 055000.

B. Shop assemble railings to greatest extent possible to minimize field splicing and assembly. Disassemble units only as necessary for shipping and handling limitations.

1. Clearly mark units for reassembly and coordinated installation.
2. Use connections that maintain structural value of joined pieces.

C. Cut, drill, and punch metals cleanly and accurately.

1. Remove burrs and ease edges to a radius of approximately 1/32 inch unless otherwise indicated.
2. Remove sharp or rough areas on exposed surfaces.

D. Form work true to line and level with accurate angles and surfaces.

E. Fabricate connections that are exposed to weather in a manner that excludes water.

1. Provide weep holes where water may accumulate.
2. Locate weep holes in inconspicuous locations.

F. Cut, reinforce, drill, and tap as indicated to receive finish hardware, screws, and similar items.

G. Connections: Fabricate railings with welded connections unless otherwise indicated.

H. Welded Connections: Cope components at connections to provide close fit, or use fittings designed for this purpose. Weld all around at connections, including at fittings.

1. Use materials and methods that minimize distortion and develop strength and corrosion resistance of base metals.
2. Obtain fusion without undercut or overlap.
3. Remove flux immediately.
4. At exposed connections, finish exposed welds to comply with NOMMA's "Voluntary Joint Finish Standards" for Finish #1 welds; ornamental quality with no evidence of a welded joint

I. Welded Connections for Aluminum Pipe: Fabricate railings to interconnect members with concealed internal welds that eliminate surface grinding, using manufacturer's standard system of sleeve and socket fittings.

J. Form changes in direction as follows:

1. By radius bends of radius indicated.
2. By bending to smallest radius that will not result in distortion of railing member.

K. Bend members in jigs to produce uniform curvature for each configuration required. Maintain cross section of member throughout entire bend without buckling, twisting, cracking, or otherwise deforming exposed surfaces of components.

L. Close exposed ends of hollow railing members with prefabricated cap and end fittings of same metal and finish as railings.

M. Provide wall returns at ends of wall-mounted handrails unless otherwise indicated. Close ends of returns unless clearance between end of rail and wall is 1/4 inch or less.

N. Brackets, Flanges, Fittings, and Anchors: Provide wall brackets, flanges, miscellaneous fittings, and anchors to interconnect railing members to other work unless otherwise indicated.

1. At brackets and fittings fastened to plaster or gypsum board partitions, provide crush-resistant fillers or other means to transfer loads through wall finishes to structural supports and prevent bracket or fitting rotation and crushing of substrate.

O. Provide inserts and other anchorage devices for connecting railings to concrete or masonry work.

1. Fabricate anchorage devices capable of withstanding loads imposed by railings.
2. Coordinate anchorage devices with supporting structure.

P. For railing posts set in concrete, provide stainless steel sleeves not less than 6 inches long with inside dimensions not less than 1/2 inch greater than outside dimensions of post, with metal plate forming bottom closure.

2.8 STEEL AND IRON FINISHES

a. Provide finishes consistent with Section 055000 “Metal Fabrications.” Where not otherwise indicated, hot-dip galvanize exterior steel after fabrication per ASTM A123/A153.Galvanized Railings:

b. Preparing Galvanized Railings for Shop Priming: After galvanizing, thoroughly clean railings of grease, dirt, oil, flux, and other foreign matter, and treat with etching cleaner.

c. Preparation for Shop Priming: Prepare uncoated ferrous-metal surfaces to comply with SSPC-SP 6/NACE No. 3, "Commercial Blast Cleaning

d. Primer Application: Apply shop primer to prepared surfaces of railings unless otherwise indicated. Comply with requirements in SSPC-PA 1, "Paint Application Specification No. 1: Shop, Field, and Maintenance Painting of Steel," for shop painting.

1) Do not apply primer to galvanized surfaces.

e. High-Performance Coating: Apply epoxy intermediate and polyurethane topcoats to prime-coated surfaces. Comply with coating manufacturer's written instructions and with requirements in SSPC-PA 1, "Paint Application Specification No. 1: Shop, Field, and Maintenance Painting of Steel," for shop painting. Apply at spreading rates recommended by coating manufacturer.

1) Color As selected by Architect from manufacturer's full range.

2.9 ALUMINUM FINISHES

A. Appearance of Finished Work: Variations in appearance of abutting or adjacent pieces are acceptable if they are within one-half of the range of approved Samples. Noticeable variations in the same piece are unacceptable. Variations in appearance of other components are acceptable if they are within the range of approved Samples and are assembled or installed to minimize contrast.

B. Clear Anodic Finish: AAMA 611, AA-M12C22A41.

PART 3 - EXECUTION

3.1 EXAMINATION

A. Examine plaster and gypsum board assemblies, where reinforced to receive anchors, to verify that locations of concealed reinforcements are clearly marked for Installer. Locate reinforcements and mark locations if not already done.

3.2 INSTALLATION, GENERAL

A. Perform cutting, drilling, and fitting required for installing railings.

1. Fit exposed connections together to form tight, hairline joints.
2. Install railings level, plumb, square, true to line; without distortion, warp, or rack.
3. Set railings accurately in location, alignment, and elevation; measured from established lines and levels.
4. Do not weld, cut, or abrade surfaces of railing components that are coated or finished after fabrication and that are intended for field connection by mechanical or other means without further cutting or fitting.
5. Set posts plumb within a tolerance of 1/16 inch in 3 feet.
6. Align rails so variations from level for horizontal members and variations from parallel with rake of steps and ramps for sloping members do not exceed 1/4 inch in 12 feet.

B. Control of Corrosion: Isolate dissimilar metals to prevent galvanic action. Coat concealed aluminum or steel in contact with masonry, concrete, or treated wood with bituminous paint per Section 055000.

C. Adjust railings before anchoring to ensure matching alignment at abutting joints.

D. Fastening to In-Place Construction: Use anchorage devices and fasteners where necessary for securing railings and for properly transferring loads to in-place construction.

3.3 RAILING CONNECTIONS

A. Welded Connections: Use fully welded joints for permanently connecting railing components. Comply with requirements for welded connections in "Fabrication" Article, whether welding is performed in the shop or in the field.

3.4 ANCHORING POSTS

A. Use stainless steel pipe sleeves preset and anchored into concrete for installing posts. After posts are inserted into sleeves, fill annular space between post and sleeve with nonshrink, nonmetallic grout, mixed and placed to comply with anchoring material manufacturer's written instructions. Where sleeves or embedded plates are provided by others, coordinate location and setting with Section 055000.

B. Cover anchorage joint with flange of same metal as post, welded to post after placing anchoring material.

3.5 ATTACHING RAILINGS

A. Attach handrails to walls with wall brackets. Provide brackets with 1-1/2-inch clearance from inside face of handrail and finished wall surface.

1. Use type of bracket with flange tapped for concealed anchorage to threaded hanger bolt .
2. Locate brackets as indicated or, if not indicated, at spacing required to support structural loads.

B. Secure wall brackets and railing end flanges to building construction as follows:

1. For concrete and solid masonry anchorage, use drilled-in expansion shields and hanger or lag bolts.

3.6 REPAIR

A. Touchup Painting: Cleaning and touchup painting of field welds, bolted connections, and abraded areas of shop paint are specified in Section 099123 – “Painting”.

3.7 CLEANING

A. Clean aluminum by washing thoroughly with clean water and soap and rinsing with clean water.

B. Galvanized Surfaces: Clean field welds, bolted connections, and abraded areas, and repair galvanizing to comply with ASTM A780/A780M.

3.8 PROTECTION

A. Protect finishes of railings from damage during construction period with temporary protective coverings approved by railing manufacturer. Remove protective coverings at time of Substantial Completion.

B. Restore finishes damaged during installation and construction period, so no evidence remains of correction work. Return items that cannot be refinished in the field to the shop; make required alterations and refinish entire unit or provide new units.

END OF SECTION 055213

SECTION 061000 – ROUGH CARPENTRY

PART 1 - GENERAL

1.1 SUMMARY

A. This Section includes the following:

1. Framing with dimension lumber.
2. Framing with engineered wood products.
3. Rooftop equipment bases and support curbs.
4. Wood blocking and nailers.
5. Wood furring.
6. Wood sleepers.
7. Plywood backing panels.

B. Related Requirements:
1. Section 061600 "Sheathing" for sheathing, subflooring, and underlayment.

1.2 SUBMITTALS

A. Product Data: For each type of process and factory-fabricated product.

1. Include data for wood-preservative treatment from chemical treatment manufacturer and certification by treating plant that treated materials comply with requirements.
2. Include data for fire-retardant treatment from chemical treatment manufacturer and certification by treating plant that treated materials comply with requirements.

B. Material Certificates: For dimension lumber specified to comply with minimum allowable unit stresses. Indicate species and grade selected for each use and design values approved by the American Lumber Standards Committee Board of Review.

C. Research/Evaluation Reports: For the following, showing compliance with building code in effect for Project:

1. Wood-preservative-treated wood.
2. Fire-retardant-treated wood.
3. Engineered wood products.
4. Power-driven fasteners.
5. Powder-actuated fasteners.
6. Expansion anchors.
7. Metal framing anchors.

1.3 DELIVERY, STORAGE, AND HANDLING

A. Stack wood products flat with spacers beneath and between each bundle to provide air circulation. Protect wood products from weather by covering with waterproof sheeting, securely anchored. Provide for air circulation around stacks and under coverings.

PART 2 - PRODUCTS

2.1 WOOD PRODUCTS, GENERAL

A. Lumber: DOC PS 20 and applicable rules of grading agencies indicated. If no grading agency is indicated, provide lumber that complies with the applicable rules of any rules-writing agency certified by the ALSC Board of Review. Provide lumber graded by an agency certified by the ALSC Board of Review to inspect and grade lumber under the rules indicated.
   1. Factory mark each piece of lumber with grade stamp of grading agency.
   2. Provide dressed lumber, S4S, unless otherwise indicated.

B. Maximum Moisture Content of Lumber: 15 percent for 2-inch nominal (38-mm actual) thickness or less, 19 percent for more than 2-inch nominal (38-mm actual) thickness unless otherwise indicated.

C. Engineered Wood Products: Provide engineered wood products acceptable to authorities having jurisdiction and for which current model code research or evaluation reports exist that show compliance with building code in effect for Project.
   1. Allowable Design Stresses: Provide engineered wood products with allowable design stresses, as published by manufacturer, that meet or exceed those indicated. Manufacturer's published values shall be determined from empirical data or by rational engineering analysis and demonstrated by comprehensive testing performed by a qualified independent testing agency.

2.2 WOOD-PRESERVATIVE-TREATED LUMBER

A. Preservative Treatment by Pressure Process: AWPA U1; Use Category UC2.
   1. Preservative Chemicals: Acceptable to authorities having jurisdiction and containing no arsenic or chromium. Do not use inorganic boron (SBX) for sill plates.

B. Kiln-dry lumber after treatment to a maximum moisture content of 19 percent. Do not use material that is warped or that does not comply with requirements for untreated material.

C. Mark lumber with treatment quality mark of an inspection agency approved by the ALSC Board of Review.

D. Application: Treat items indicated on Drawings, and the following:
   1. Wood cants, nailers, curbs, equipment support bases, blocking, stripping, and similar members in connection with roofing, flashing, vapor barriers, and waterproofing.
   2. Wood sills, sleepers, blocking, furring, stripping, and similar concealed members in contact with masonry or concrete.
   3. Wood framing and furring attached directly to the interior of below-grade exterior masonry or concrete walls.
   4. Wood framing members that are less than 18 inches (460 mm) above the ground in crawlspaces or unexcavated areas.
   5. Wood floor plates that are installed over concrete slabs-on-grade.

2.3 FIRE-RETARDANT-TREATED MATERIALS

A. General: Where fire-retardant-treated materials are indicated, use materials complying with requirements in this article, that are acceptable to authorities having jurisdiction, and with fire-test-response characteristics specified as determined by testing identical products per test method indicated by a qualified testing agency.

B. Fire-Retardant-Treated Lumber and Plywood by Pressure Process: Products with a flame spread index of 25 or less when tested according to ASTM E 84, and with no evidence of significant progressive combustion when the test is extended an additional 20 minutes, and with the flame front not extending more than 10.5 feet (3.2 m) beyond the centerline of the burners at any time during the test.
   1. Exterior Type: Treated materials shall comply with requirements specified above for fire-retardant-treated lumber and plywood by pressure process after being subjected to accelerated weathering according to ASTM D 2898. Use for exterior locations and where indicated.
   2. Interior Type A: Treated materials shall have a moisture content of 28 percent or less when tested according to ASTM D 3201 at 92 percent relative humidity. Use where exterior type is not indicated.

C. Kiln-dry lumber after treatment to a maximum moisture content of 15 percent. Kiln-dry plywood after treatment to a maximum moisture content of 15 percent.

D. Identify fire-retardant-treated wood with appropriate classification marking of qualified testing agency.

E. Application: Treat items indicated on Drawings, and the following:
   1. Plywood backing panels.

2.4 DIMENSION LUMBER FRAMING

A. Framing for all Exterior & Interior Partitions: No. 1 or 2 grade.
   1. Application: Framing other than interior partitions not indicated as load-bearing.
   2. Species:
      a. Hem-fir; NLGA.
      b. Spruce-pine-fir; NLGA.

2.5 ENGINEERED WOOD PRODUCTS

A. Laminated-Veneer Lumber: Structural composite lumber made from wood veneers with grain primarily parallel to member lengths, evaluated and monitored according to ASTM D 5456 and manufactured with an exterior-type adhesive complying with ASTM D 2559.
   1. Extreme Fiber Stress in Bending, Edgewise: 2250 psi for 12-inch nominal- (286-mm actual-) depth members.
   2. Modulus of Elasticity, Edgewise: 1,500,000 psi.

2.6 MISCELLANEOUS LUMBER

A. General: Provide miscellaneous lumber indicated and lumber for support or attachment of other construction, including the following:
   1. Blocking.
   2. Nailers.

3. Rooftop equipment bases and support curbs.
4. Cants.
5. Furring.
6. Grounds.

B. For items of dimension lumber size, provide Construction or No. 2 grade lumber of any species.

C. For concealed boards, provide lumber with 15 percent maximum moisture content and the following species and grades:

D. Northern species; No. 2 Common grade; NLGA.

2.7 PLYWOOD BACKING PANELS

A. Equipment Backing Panels: DOC PS 1, fire-retardant treated, in thickness indicated or, if not indicated, not less than 3/4-inch (19-mm) nominal thickness.

2.8 FASTENERS

A. General: Provide fasteners of size and type indicated that comply with requirements specified in this article for material and manufacture.
1. Where rough carpentry is exposed to weather, in ground contact, pressure-preservative treated, or in area of high relative humidity, provide fasteners with hot-dip zinc coating complying with ASTM A 153/A 153M.

B. Power-Driven Fasteners: NES NER-272.

C. Bolts: Steel bolts complying with ASTM A 307, Grade A (ASTM F 568M, Property Class 4.6); with ASTM A 563 (ASTM A 563M) hex nuts and, where indicated, flat washers.

2.9 METAL FRAMING ANCHORS

A. Manufacturers: Subject to compliance with requirements, available manufacturers offering products that may be incorporated into the Work include, but are not limited to, the following:
1. Cleveland Steel Specialty Co.
2. KC Metals Products, Inc.
3. Phoenix Metal Products, Inc.
4. Simpson Strong-Tie Co., Inc.
5. USP Structural Connectors.

B. Allowable Design Loads: Provide products with allowable design loads, as published by manufacturer, that meet or exceed those indicated on the structural drawings. Manufacturer's published values shall be determined from empirical data or by rational engineering analysis and demonstrated by comprehensive testing performed by a qualified independent testing agency.

C. Galvanized-Steel Sheet: Hot-dip, zinc-coated steel sheet complying with ASTM A 653/A 653M, G60 (Z180) coating designation.
1. Use for interior locations unless otherwise indicated.

D. Hot-Dip, Heavy-Galvanized Steel Sheet: ASTM A 653/A 653M; structural steel (SS), high-strength low-alloy steel Type A (HSLAS Type A), or high-strength low-alloy steel Type B (HSLAS Type B); G185 (Z550) coating designation; and not less than 0.036 inch (0.9 mm) thick.

1. Use for wood-preservative-treated lumber and where indicated.

2.10 MISCELLANEOUS MATERIALS

A. Sill-Sealer Gaskets: Glass-fiber-resilient insulation, fabricated in strip form, for use as a sill sealer; 1-inch (25-mm) nominal thickness, compressible to 1/32 inch (0.8 mm); selected from manufacturer's standard widths to suit width of sill members indicated.Retain "Steel Plates, Shapes, and Bars" Subparagraph below if required for rigid anchors.

PART 3 - EXECUTION

3.1 INSTALLATION, GENERAL

A. Set rough carpentry to required levels and lines, with members plumb, true to line, cut, and fitted. Fit rough carpentry to other construction; scribe and cope as needed for accurate fit. Locate furring, nailers, blocking, and similar supports to comply with requirements for attaching other construction.

B. Framing Standard: Comply with AF&PA's WCD 1, "Details for Conventional Wood Frame Construction," unless otherwise indicated.

C. Framing with Engineered Wood Products: Install engineered wood products to comply with manufacturer's written instructions.

D. Install fire-retardant treated plywood backing panels with classification marking of testing agency exposed to view.

E. Metal Framing Anchors: Install metal framing anchors to comply with manufacturer's written instructions. Install fasteners through each fastener hole.

F. Do not splice structural members between supports unless otherwise indicated.

G. Comply with AWPA M4 for applying field treatment to cut surfaces of preservative-treated lumber.

H. Where wood-preservative-treated lumber is installed adjacent to metal decking, install continuous flexible flashing separator between wood and metal decking.

I. Securely attach rough carpentry work to substrate by anchoring and fastening as indicated, complying with the following:
   1. Structural engineering drawings.
   2. Table 2304.9.1, "Fastening Schedule," in ICC's International Building Code.

3.2 PROTECTION

A. Protect rough carpentry from weather. If, despite protection, rough carpentry becomes sufficiently wet that moisture content exceeds that specified, apply EPA-registered borate treatment. Apply borate solution by spraying to comply with EPA-registered label.

END OF SECTION 061000

SECTION 061600 - SHEATHING

PART 1 - GENERAL

1.1 SUMMARY

A. Section Includes:

1. Wall sheathing at exterior building walls composed of cold-formed metal framing.
2. Wall sheathing at exterior parapet walls composed of cold-formed metal framing.

B. Related Requirements:

1. Section 061000 "Rough Carpentry" for plywood backing panels.
2. Division 07 Section for "Weather Barriers" for water-resistive barrier applied over wall sheathing.

1.2 ACTION SUBMITTALS

A. Product Data Submittals: For each type of process and factory-fabricated product. Indicate component materials and dimensions and include construction and application details.

1. Include data for wood-preservative treatment from chemical treatment manufacturer and certification by treating plant that treated plywood complies with requirements. Indicate type of preservative used and net amount of preservative retained.
2. Include data for fire-retardant treatment from chemical treatment manufacturer and certification by treating plant that treated plywood complies with requirements. Include physical properties of treated materials.
   a. Fire-retardant-treated plywood is required where indicated in Part 2 or where required by code.
3. For fire-retardant treatments, include physical properties of treated plywood both before and after exposure to elevated temperatures, based on testing by a qualified independent testing agency in accordance with ASTM D5516.
4. For products receiving waterborne treatment, include statement that moisture content of treated materials was reduced to levels specified before shipment to Project site.
5. For air-barrier and water-resistant glass-mat gypsum sheathing, include manufacturer's technical data and tested physical and performance properties of products.

1.3 DELIVERY, STORAGE, AND HANDLING

A. Stack panels flat with spacers beneath and between each bundle to provide air circulation. Protect sheathing from weather by covering with waterproof sheeting, securely anchored. Provide for air circulation around stacks and under coverings.

PART 2 - PRODUCTS

2.1 WALL SHEATHING

A. Glass-Mat Gypsum Sheathing, Walls: ASTM C1177/C1177M.

1. Manufacturers: Subject to compliance with requirements, provide products by one of the following:
   a. CertainTeed; SAINT-GOBAIN.
   b. Georgia-Pacific Gypsum LLC.
   c. Gold Bond Building Products, LLC provided by National Gypsum Company.
   d. USG Corporation.
   e. Or Approved Equal.
2. Thickness: 5/8 inch thick.
3. Size: 48 by 96 inches 48 by 108 inches 48 by 120 inches for vertical installation.

2.2 PARAPET SHEATHING

A. Plywood Sheathing, Parapets: Exposure 1 plywood sheathing, grade as required by structural design.

1. Span Rating: Not less than 32/16.
2. Nominal Thickness: Not less than 5/8 inch at parapet walls and 3/4 inch at roof copings.
3. Fire-Retardant Treatment: Provide fire-retardant-treated plywood complying with IBC requirements for exterior wall construction in Type III buildings.

B. Glass-Mat Gypsum Sheathing, Parapets: ASTM C1177/C1177M.

1. Manufacturers: Subject to compliance with requirements, provide products by the following:
   a. CertainTeed; SAINT-GOBAIN.
   b. Gold Bond Building Products, LLC provided by National Gypsum Company.
   c. USG Corporation.
   d. Or Approved Equal.
2. Type and Thickness: Type X, 5/8 inch thick.
3. Size: 48 by 96 inches 48 by 108 inches 48 by 120 inches for vertical installation.

2.3 ROOF SHEATHING

A. Roof Sheathing: Wood structural panel sheathing, Exposure 1, grade as required by structural design.

1. Span Rating: As required by structural design.
2. Nominal Thickness: As indicated on Drawings.
3. Fire-Retardant Treatment: Not required unless specifically indicated on Drawings or required by applicable code.

2.4 FASTENERS

A. General: Provide fasteners of size and type indicated that comply with requirements specified in this article for material and manufacture.

1. For parapet and wall sheathing, provide fasteners with hot-dip zinc coating complying with ASTM A153/A153M of Type 304 stainless steel.
2. For parapet and wall sheathing, provide fasteners with organic-polymer or other corrosion-protective coating having a salt-spray resistance of more than 800 hours in accordance with ASTM B117.

B. Nails, Brads, and Staples: ASTM F1667.

C. Power-Driven Fasteners: Fastener systems with an evaluation report acceptable to authorities having jurisdiction, based on ICC-ES AC70.

D. Screws for Fastening Wood Structural Panels to Cold-Formed Metal Framing: ASTM C954, except with wafer heads and reamer wings, length as recommended by screw manufacturer for material being fastened.

E. Screws for Fastening Gypsum Sheathing to Cold-Formed Metal Framing: Steel drill screws, in length recommended by sheathing manufacturer for thickness of sheathing to be attached.

1. For steel framing less than 0.0329 inch thick, use screws that comply with ASTM C1002.
2. For steel framing from 0.033 to 0.112 inch thick, use screws that comply with ASTM C954.

2.5 MISCELLANEOUS MATERIALS

A. Adhesives for Field Gluing Panels to Wood Framing: Formulation complying with APA AFG-01 ASTM D3498 that is approved for use with type of construction panel indicated by manufacturers of both adhesives and panels.

PART 3 - EXECUTION

3.1 INSTALLATION, GENERAL

A. Do not use materials with defects that impair quality of sheathing or pieces that are too small to use with minimum number of joints or optimum joint arrangement. Arrange joints so that pieces do not span between fewer than three support members.

B. Cut panels at penetrations, edges, and other obstructions of work; fit tightly against abutting construction unless otherwise indicated.

C. Securely attach to substrate by fastening as indicated, complying with the following:

1. IBC Table 2304.10.1.
2. ICC-ES evaluation report for fastener.

D. Use common wire nails unless otherwise indicated. Select fasteners of size that will not fully penetrate members where opposite side will be exposed to view or will receive finish materials. Make tight connections. Install fasteners without splitting wood.

E. Coordinate wall parapet and sheathing installation with flashing and joint-sealant installation so these materials are installed in sequence and manner that prevent exterior moisture from passing through completed assembly.

F. Do not bridge building expansion joints; cut and space edges of panels to match spacing of structural support elements.

G. Coordinate sheathing installation with installation of materials installed over sheathing so sheathing is not exposed to precipitation or left exposed at end of the workday when rain is forecast.

3.2 INSTALLATION OF GYPSUM SHEATHING

A. Comply with GA-253 and with manufacturer's written instructions.

1. Fasten gypsum sheathing to wood framing with nails or screws.
2. Fasten gypsum sheathing to cold-formed metal framing with screws.
3. Install panels with a 3/8-inch gap where non-load-bearing construction abuts structural elements.
4. Install panels with a 1/4-inch gap where they abut masonry or similar materials that might retain moisture, to prevent wicking.

B. Apply fasteners so heads bear tightly against face of sheathing, but do not cut into facing.

C. Horizontal Installation: Install sheathing with V-grooved edge down and tongue edge up. Interlock tongue with groove to bring long edges in contact with edges of adjacent panels without forcing. Abut ends over centers of studs, and stagger end joints of adjacent panels not less than one stud spacing. Attach at perimeter and within field of panel to each stud.

1. Space fasteners approximately 8 inches o.c. and set back a minimum of 3/8 inch from edges and ends of panels.
2. For sheathing under stucco cladding, panels may be initially tacked in place with screws if overlying self-furring metal lath is screw-attached through sheathing to studs immediately after sheathing is installed.

D. Vertical Installation: Install vertical edges centered over studs. Abut ends and edges with those of adjacent panels. Attach at perimeter and within field of panel to each stud.

1. Space fasteners approximately 8 inches o.c. and set back a minimum of 3/8 inch from edges and ends of panels.
2. For sheathing under stucco cladding, panels may be initially tacked in place with screws if overlying self-furring metal lath is screw-attached through sheathing to studs immediately after sheathing is installed.

E. Seal sheathing joints in accordance with sheathing manufacturer's written instructions.

1. Apply elastomeric sealant to joints and fasteners and trowel flat. Apply sufficient amount of sealant to completely cover joints and fasteners after troweling. Seal other penetrations and openings.
2. Apply glass-fiber sheathing tape to glass-mat gypsum sheathing joints and apply and trowel sealant to embed entire face of tape in sealant. Apply sealant to exposed fasteners with a trowel so fasteners are completely covered. Seal other penetrations and openings.

F. Air-Barrier and Water-Resistant Glass-Mat Gypsum Sheathing:

1. Install accessory materials in accordance with sheathing manufacturer's written instructions and details to form a seal with adjacent construction, to seal fasteners, and ensure continuity of air and water barrier.

a. Coordinate the installation of sheathing with installation of roofing membrane and base flashing to ensure continuity of air barrier with roofing membrane.
b. Install transition strip on roofing membrane or base flashing, so that a minimum of 3 inches of coverage is achieved over each substrate.

2. Connect and seal sheathing material continuously to air barriers specified under other Sections as well as to roofing-membrane air barrier, concrete below-grade structures, floor-to-floor construction, exterior glazing and window systems, glazed curtain-wall systems, storefront systems, exterior louvers, exterior door framing, and other construction used in exterior wall openings, using accessory materials.
3. Apply joint sealants forming part of air-barrier assembly within manufacturer's recommended application temperature ranges. Consult manufacturer when sealant cannot be applied within these temperature ranges.
4. Wall Openings: Prime concealed, perimeter frame surfaces of windows, curtain walls, storefronts, and doors. Apply transition strip , so that a minimum of 3 inches of coverage is achieved over each substrate. Maintain 3 inches of full contact over firm bearing to perimeter frames, with not less than 1 inch of full contact.
   a. Transition Strip: Roll firmly to enhance adhesion.
   b. Preformed Silicone Extrusion: Set in full bed of silicone sealant applied to walls, frame, and air-barrier material.
5. Fill gaps in perimeter frame surfaces of windows, curtain walls, storefronts, doors, and miscellaneous penetrations of sheathing material with foam sealant.
6. Seal strips and transition strips around masonry reinforcing or ties and penetrations with termination mastic.
7. Seal top of through-wall flashings to sheathing with an additional 6-inch- wide, transition strip.
8. Seal exposed edges of strips at seams, cuts, penetrations, and terminations not concealed by metal counterflashings or ending in reglets with termination mastic.
9. Repair punctures, voids, and deficient lapped seams in strips and transition strips extending 6 inches beyond repaired areas in strip direction.

END OF SECTION 061600

SECTION 062013 (NHG) – EXTERIOR FINISH CARPENTRY

PART 1 - GENERAL

1.1 SUMMARY

A. Section applies only to New Hopkins Gymnasium (NHG).

B. Section Includes:
1. Exterior PVC Sheet Panels.
2. PVC Molding profiles for parapet trim.

C. Related Sections:
1. Section 061000 “Rough Carpentry” for wood blocking.
2. Section 079200 “Joint Sealants” for sealant requirements at joints and trim.
3. Section 099123 “Painting” for finish requirements and color coordination of exposed PVC panels and trim.

1.2 ACTION SUBMITTALS

A. Samples: Provide sample of sheet panel and each molding profile for verification of finish and color.

B. Product Data: For PVC sheet panels and molding profiles, including installation instructions and adhesive/sealant recommendations. Include manufacturer’s recommendations for surface preparation, compatible adhesives, fasteners, and sealants.

1.3 QUALITY ASSURANCE

A. Installer Qualifications: Experienced installer with demonstrated ability to install PVC panels and trim in accordance with manufacturer’s instructions. Installer shall have a minimum of 3 years’ experience installing similar PVC exterior panel systems.

1.4 DELIVERY, STORAGE AND HANDLING

A. Store panels and profiles flat, in a dry location, protected from direct sunlight and damage

1.5 FIELD CONDITIONS

A. Do not install until spaces are enclosed, weathertight, and maintained at normal occupancy temperature and humidity.

B. Do not install when ambient temperature is below 40 °F (4 °C) or during precipitation.

1.6 REFERENCES

A. ASTM D1784 – Rigid Poly(Vinyl Chloride) (PVC) Compounds and Chlorinated PVC (CPVC) Compounds.

B. ASTM E84 – Standard Test Method for Surface Burning Characteristics of Building Materials.

C. ASTM D635 – Standard Test Method for Rate of Burning and/or Extent and Time of Burning of Plastics in a Horizontal Position

D. AAMA 2604 – Voluntary Specification, Performance Requirements and Test Procedures for High-Performance Organic Coatings on Coated Aluminum Extrusions and Panels (reference for paint compatibility).

E. Manufacturer's published installation instructions and technical bulletins.

PART 2 - PRODUCTS

2.1 PVC SHEET PANELS

A. Conform to ASTM D 1784, Cell Class 12454-B, and ASTM E 84 for flame spread index ≤ 25.

B. Basis of Design Product: Azek PVC Sheet; substitutions per Division 01 'Product Requirements.

C. Thickness: ½ inch.

D. Finish: Smooth.

E. Color: Field painted white.
   1. Field paint using vinyl-safe coating compatible with manufacturer's recommendations.

F. Size: As shown on architectural drawings.

2.2 PVC MOLDING PROFILES

A. Manufacturer: The Azek Company.

B. Profiles: As indicated on architectural drawings.
   1. Provide all trim shapes required for corners, terminations, and joints to match panel system.

C. Finish: Smooth, field painted to match flat panels.
   1. Field paint using vinyl-safe coating compatible with manufacturer's recommendations.

D. Accessories:
   1. Adhesive: Manufacturer's recommended adhesive for PVC panels and trim.
   2. Sealant: Neutral-cure, color matched, single-component silicone sealant, complying with Section 079200.

2.3 FASTENERS AND ACCESSORIES

A. Fasteners: Stainless-steel screws or nails with trim-style heads; color-matched where exposed.
   1. Type 304 or 316 stainless steel only; galvanized or coated carbon steel not permitted.
   2. Length and spacing per manufacturer's recommendations for substrate type.
   3. Adhesive: Manufacturer's proprietary cellular-PVC adhesive or compatible polyurethane construction adhesive.
   4. Filler and Patching Compound: Manufacturer's recommended two-part PVC repair compound for filling countersunk fasteners or joints prior to painting
   5. Flashing and Joint Tape: Manufacturer's standard compatible self-adhesive flashing where required at horizontal terminations or joints exposed to runoff.

2.4 SOURCE QUALITY CONTROL

1. Manufacturer shall provide written certification that PVC sheet and trim components conform to ASTM D1784 and D635.
2. Do not mix manufacturers for sheets, moldings, adhesives, and sealants within a single elevation or façade

2.5 FABRICATION

1. Factory-mill joints, edges, and profiles to required shapes.
2. Miter and preassemble trim pieces at corners where possible for concealed mechanical fastening.

PART 3 - EXECUTION

3.1 EXAMINATION

A. Verify substrates are smooth, clean, and properly prepared for adhesive installation.

3.2 INSTALLATION

A. Install PVC sheet panels and molding profiles in accordance with Azek manufacturer's written instructions.

B. Apply adhesive in full coverage; do not fasten through panels unless approved by manufacturer.

C. Install trim profiles with adhesive and sealant as recommended.

D. Allow for thermal expansion and contraction per manufacturer's guidelines; do not butt panels tightly.

E. Seal joints and gaps between panels, trim, and adjacent construction with specified sealant.

F. Remove excess sealant and clean surfaces immediately. Clean finished surfaces using mild detergent and soft cloths; do not use solvents or abrasives.

3.3 FIELD QUALITY CONTROL

A. Inspect installed panels and trim for secure adhesion, uniform joints, and proper thermal movement gaps

B. Reject and replace panels showing oil-canning, buckling, open joints, or adhesive bleed-through.

C. Do not field-paint until surfaces are clean, dry, and cured per adhesive and sealant manufacturer's instructions (minimum 24 hours, or per product data).

END OF SECTION 062013

SECTION 071113 - BITUMINOUS DAMPPROOFING

PART 1 - GENERAL

1.1 SUMMARY

A. Section Includes:

1. Cold-applied, emulsified-asphalt dampproofing.

B. Related Requirements:

1. Section 033000 "Cast-in-Place Concrete" for bituminous vapor retarders under slabs-on-grade.
2. Section 042000 "Unit Masonry" for mortar parge coat on masonry surfaces.

1.2 ACTION SUBMITTALS

A. Product Data: For each type of product.

1.3 FIELD CONDITIONS

A. Weather Limitations: Proceed with application only when existing and forecasted weather conditions permit dampproofing to be performed according to manufacturers' written instructions.

B. Ventilation: Provide adequate ventilation during application of dampproofing in enclosed spaces. Maintain ventilation until dampproofing has cured.

C. Substrate & Dew Point: Apply only when substrate temperature is **≥ 5°F (3°C) above dew point** and per manufacturer’s min. temperature requirements.

D. Cure & Weather: Protect freshly applied dampproofing from **rain, freezing, and backfill** until fully cured.

PART 2 - PRODUCTS

2.1 SOURCE LIMITATIONS

A. Source Limitations: Obtain primary dampproofing materials and primers from single source from single manufacturer. Provide auxiliary materials recommended in writing by manufacturer of primary materials.

2.2 PERFORMANCE REQUIREMENTS

A. VOC Content: Products are to comply with VOC content limits of authorities having jurisdiction unless otherwise indicated.

2.3 COLD-APPLIED, EMULSIFIED-ASPHALT DAMPPROOFING

A. Manufacturers: Subject to compliance with requirements, provide products by one of the following:

1. Euclid Chemical Company (The); a subsidiary of RPM International, Inc.
2. Henry, a Carlisle Company (formerly Henry Company and Carlisle Coatings & Waterproofing Inc. brands).
3. Karnak Corporation.
4. W. R. Meadows, Inc.

B. Trowel Applied: ASTM D1227, Type II, Class 1.

C. Fibered Brush / Spray: ASTM D1227, Type II, Class 1.

D. Unfibered Brush / Spray: ASTM D1227, Type III, Class 1.

2.4 AUXILIARY MATERIALS

A. Furnish auxiliary materials recommended in writing by dampproofing manufacturer for intended use and compatible with bituminous dampproofing.

B. Emulsified-Asphalt Primer: ASTM D1227, Type III, Class 1, except diluted with water as recommended in writing by manufacturer.

C. Asphalt-Coated Glass Fabric: ASTM D1668/D1668M, Type I.

D. Patching Compound: Epoxy or latex-modified repair mortar of type recommended in writing by dampproofing manufacturer.

2.5 INSULATION DRAINAGE PANELS

A. Insulation Drainage Panels:

1. Comply with Section 072100 "Thermal Insulation" for insulation drainage panels.
2. Unfaced or geotextile-faced, extruded-polystyrene board insulation according to ASTM C578, Type IV, 25-psi, or Type VI, 40-psi, minimum compressive strength; fabricated with shiplap or channel edges and with one side having grooved drainage channels.
3. Manufacturers: Subject to compliance with requirements, provide products by one of the following:
   a. DuPont de Nemours, Inc.
   b. Kingspan Insulation LLC.
   c. Owens Corning.
   d. T. Clear Corporation, a subsidiary of Fin Pan Inc.

4. Protection / Drainage: Where drainage or protection is required prior to backfill, install insulation drainage panels over cured dampproofing; coordinate laps to direct water to footing drains and maintain continuity with flashings.

PART 3 - EXECUTION

3.1 EXAMINATION

A. Examine substrates, areas, and conditions, with Applicator present, for compliance with requirements for surface smoothness, maximum surface moisture content, and other conditions affecting performance of the Work.

B. Proceed with application only after substrate construction and penetrating work have been completed and unsatisfactory conditions have been corrected.

3.2 PREPARATION

A. Clean, prepare, and treat substrates according to manufacturer's written instructions. Provide clean, dust-free, and dry substrates for dampproofing application.

B. Mask or otherwise protect adjoining exposed surfaces from being stained, spotted, or coated with dampproofing. Prevent dampproofing materials from entering and clogging weep holes and drains.

C. Clean substrates of projections and substances detrimental to dampproofing work; fill voids, seal joints, and remove bond breakers if any.

D. Apply patching compound to fill tie holes, honeycombs, reveals, and other surface imperfections; where recommended by manufacturer, embed an 8-inch-wide strip of asphalt-coated glass fabric in the wet dampproofing over patched areas.

3.3 INSTALLATION, GENERAL

A. Comply with manufacturer's written instructions for dampproofing application, cure time between coats, and drying time before backfilling unless otherwise indicated.

1. Apply dampproofing to provide continuous plane of protection.
2. Apply additional coats if recommended in writing by manufacturer or to achieve a smooth surface and uninterrupted coverage.

B. Where dampproofing footings and foundation walls, apply from finished-grade line to top of footing; extend over top of footing and down a minimum of 6 inches over outside face of footing.

1. Extend dampproofing 12 inches onto intersecting walls and footings, but do not extend onto surfaces exposed to view when Project is completed.
2. Install flashings and corner protection stripping at internal and external corners, changes in plane, construction joints, cracks, and where indicated as "reinforced," by embedding an 8-inch- wide strip of asphalt-coated glass fabric in a heavy coat of dampproofing. Dampproofing coat for embedding fabric is in addition to other coats required.
3. Termination at Grade: Terminate dampproofing 2 inches (50 mm) below finished grade minimum; do not extend onto surfaces exposed to view.

C. Where dampproofing exterior face of inner wythe of exterior masonry cavity walls, lap dampproofing at least 1/4 inch onto flashing, masonry reinforcement, veneer ties, and other items that penetrate inner wythe.

1. Extend dampproofing over outer face of structural members and concrete slabs that interrupt inner wythe.
2. Lap dampproofing at least 1/4 inch onto shelf angles supporting veneer.

D. Where dampproofing interior face of above-grade, exterior and walls, continue dampproofing through intersecting walls by keeping vertical mortar joints at intersection temporarily open or by dampproofing wall before constructing intersecting walls.

3.4 INSTALLATION OF COLD-APPLIED, EMULSIFIED-ASPHALT DAMPPROOFING

A. Concrete Foundations and Parged Masonry Foundation Walls: Apply one of the following systems on clean, dry, prepared substrates:

1. Two -coat brush or spray system: First coat ≥ 1.5 gal/100 sq ft; second coat ≥ 1.0 gal/100 sq ft.

2. Single fibered brush or spray coat: ≥ 3.0 gal/100 sq ft.

3. Single trowel coat: ≥ 4.0 gal/100 sq ft.
4. Apply per manufacturer's written instructions for cure time between coats; achieve a continuous, pinhole-free film.

B. Unparged Masonry Foundation Walls:

1. Preferred: Provide a parge coat and dampproofing per previous paragraph.

2. If parging is not used: Prime substrate, then provide one of the following

a. Two -coat brush or spray system: First coat ≥ 1.5 gal/100 sq ft; second coat ≥ 1.0 gal/100 sq ft.

b. Single fibered brush or spray coat: ≥ 3.0 gal/100 sq ft.

c. Single trowel coat: ≥ 4.0 gal/100 sq ft.
d. Use primer where required by manufacturer; ensure full coverage at mortar joints and block faces.

C. Apply per manufacturer's written instructions for cure time between coats; achieve a continuous, pinhole-free film.

3.5 PROTECTION

A. Protect installed insulation drainage panels from damage due to UV light, harmful weather exposures, physical abuse, and other causes. Provide temporary coverings where panels are subject to abuse and cannot be concealed and protected by permanent construction immediately after installation.

B. Correct dampproofing that does not comply with requirements; repair substrates, and reapply dampproofing.

C. Protection Prior to Backfill: Where dampproofed surfaces contact backfill, install protection/drainage board (Section 2.5) over fully cured dampproofing.

D. Backfilling: Do not backfill with **frozen** or debris-laden materials; place backfill carefully to avoid damaging dampproofing and protection boards.

E. Repairs: Repair damaged dampproofing and re-protect before resuming backfill.

END OF SECTION 071113

SECTION 072100 - THERMAL INSULATION

PART 1 - GENERAL

1.1 RELATED DOCUMENTS

A. Drawings and general provisions of the Contract, including General and Supplementary Conditions and Division 01 Specification Sections, apply to this Section.

1.2 SUMMARY

A. Section Includes:

1. Extruded polystyrene foam-plastic board insulation.
2. Polyisocyanurate foam-plastic board insulation.
3. Glass-fiber blanket insulation.
4. Mineral-wool blanket insulation.
5. Mineral-wool board insulation.
6. Closed-cell spray polyurethane foam insulation.

1.3 ACTION SUBMITTALS

A. Product Data: For each of the following:

1. For each insulation product and accessory indicated. Include manufacturer's written data for material type, thickness, R-value, compressive strength, facing, flame-spread and smoke-developed ratings, recycled content where applicable, and recommended installation methods.

2. For adhesives, fasteners, washers, spray foam, and other insulation accessories. Include documentation of compatibility with adjacent substrates, air barriers, water-resistive barriers, dampproofing, waterproofing, and other materials in contact with insulation.

1.4 INFORMATIONAL SUBMITTALS

A. Product Test Reports: For each product, for tests performed by a qualified testing agency.

B. Research Reports: Current ICC-ES Evaluation Reports verifying compliance of foam-plastic insulation with the applicable building code and state and local amendments.

C. Fire Propagation Compliance Documentation: For foam-plastic insulation used in exterior wall assemblies, submit documentation demonstrating compliance with NFPA 285 where required by the applicable building code and indicated exterior wall assembly.

1.5 DELIVERY, STORAGE, AND HANDLING

A. Protect insulation materials from physical damage and from deterioration due to moisture, soiling, and other sources. Store inside and in a dry location. Comply with manufacturer's written instructions for handling, storing, and protecting during installation.

B. Protect foam-plastic board insulation as follows:

1. Do not expose to sunlight except to necessary extent for period of installation and concealment.
2. Protect against ignition at all times. Do not deliver foam-plastic board materials to Project site until just before installation time.
3. Quickly complete installation and concealment of foam-plastic board insulation in each area of construction.

PART 2 - PRODUCTS

2.1 EXTRUDED POLYSTYRENE FOAM-PLASTIC BOARD INSULATION

A. Extruded Polystyrene Board Insulation, Type IV : ASTM C578, Type IV, 25-psi minimum compressive strength; unfaced.

1. Manufacturers: Subject to compliance with requirements, provide products by the following:
   a. Owens Corning - FOAMULAR NGX 250 (25 psi).
   b. Or Approved equal.
2. Flame-Spread Index: Not more than 25 when tested in accordance with ASTM E84.
3. Smoke-Developed Index: Not more than 450 when tested in accordance with ASTM E84.
4. Fire Propagation Characteristics: Passes NFPA 285 testing as part of an approved assembly.
5. Labeling: Provide identification of mark indicating R-value of each piece of insulation 12 inches and wider in width.

2.2 POLYISOCYANURATE FOAM-PLASTIC BOARD INSULATION

A. Polyisocyanurate Board Insulation, Glass-Fiber-Mat Faced : ASTM C1289, glass-fiber-mat faced, Type II, Class 2.

1. Manufacturers: Subject to compliance with requirements, provide products by the following:
   a. Johns Manville – CI MAX.
   b. Or Approved equal.
2. Fire Propagation Characteristics: Passes NFPA 285 testing as part of an approved assembly.
3. Labeling: Provide identification of mark indicating R-value of each piece of insulation 12 inches and wider in width.

2.3 GLASS-FIBER BLANKET INSULATION

A. Glass-Fiber Blanket Insulation, Unfaced : ASTM C665, Type I; passing ASTM E136 for combustion characteristics.

1. Manufacturers: Subject to compliance with requirements, provide products by the following:
   a. Owens Corning.
   b. Or Approved equal.
2. Flame-Spread Index: Not more than 25 when tested in accordance with ASTM E84.
3. Smoke-Developed Index: Not more than 50 when tested in accordance with ASTM E84.
4. Labeling: Provide identification of mark indicating R-value of each piece of insulation 12 inches and wider in width.

2.4 MINERAL-WOOL BLANKET INSULATION

A. Mineral-Wool Blanket Insulation, Unfaced : ASTM C665, Type I (blankets without membrane facing); consisting of fibers; passing ASTM E136 for combustion characteristics.

1. Manufacturers: Subject to compliance with requirements, provide products by the following:
   a. ROCKWOOL.
   b. Or Approved equal.
2. Flame-Spread Index: Not more than 25 when tested in accordance with ASTM E84.
3. Smoke-Developed Index: Not more than 50 when tested in accordance with ASTM E84.
4. Labeling: Provide identification of mark indicating R-value of each piece of insulation 12 inches and wider in width.

2.5 MINERAL-WOOL BOARD INSULATION

A. Mineral-Wool Board Insulation, Type II, Unfaced : ASTM C612, Type II; passing ASTM E136 for combustion characteristics.

1. Manufacturers: Subject to compliance with requirements, provide products by the following:
   a. ROCKWOOL.
   b. Or Approved equal.
2. Nominal Density: 8 lb/cu. ft..
3. Flame-Spread Index: Not more than 15 when tested in accordance with ASTM E84.
4. Smoke-Developed Index: Not more than zero when tested in accordance with ASTM E84.
5. Labeling: Provide identification of mark indicating R-value of each piece of insulation 12 inches and wider in width.

2.6 INSULATION FASTENERS

A. Insulation-Retaining Washers: Self-locking washers formed from 0.016-inch- thick galvanized-steel sheet, with beveled edge for increased stiffness, sized as required to hold insulation securely in place, but not less than 1-1/2 inches square or in diameter.

1. Manufacturers: Subject to compliance with requirements, provide products by the following:
   a. Gemco.
   b. Or Approved equal.
2. Protect ends with capped self-locking washers incorporating a spring steel insert to ensure permanent retention of cap in the following locations:
   a. Ceiling plenums.

B. Anchor Adhesive: Product with demonstrated capability to bond insulation anchors securely to substrates without damaging insulation, fasteners, or substrates.

2.7 ACCESSORIES

A. Insulation for Miscellaneous Voids:

1. Spray Polyurethane Foam Insulation: ASTM C1029, Type II, closed cell, with maximum flame-spread and smoke-developed indexes of 75 and 450, respectively, per ASTM E84.

B. Adhesive for Bonding Insulation: Product compatible with insulation and air and water barrier materials, and with demonstrated capability to bond insulation securely to substrates without damaging insulation and substrates.

C. Compatibility: Adhesives, foams, and insulation boards in contact with air and water barrier materials shall be certified by manufacturer as chemically compatible and shall not compromise adhesion or long-term performance

PART 3 - EXECUTION

3.1 PREPARATION

A. Clean substrates of substances that are harmful to insulation, including removing projections capable of puncturing insulation or vapor retarders, or that interfere with insulation attachment.

3.2 INSTALLATION, GENERAL

A. Comply with insulation manufacturer's written instructions applicable to products and applications.

B. At existing building elements, verify substrate conditions and remove residual materials, fasteners, or adhesives from previous finishes that could interfere with adhesion or insulation placement.

C. Install insulation that is undamaged, dry, and unsoiled and that has not been left exposed to ice, rain, or snow at any time.

D. Install insulation with manufacturer's R-value label exposed after insulation is installed.

E. Ensure continuous insulation coverage at floor lines, parapets, columns, and around fenestrations. Avoid thermal bridging at framing and structure

F. Extend insulation to envelop entire area to be insulated. Fit tightly around obstructions and fill voids with insulation. Remove projections that interfere with placement.

G. Provide sizes to fit applications and selected from manufacturer's standard thicknesses, widths, and lengths. Apply single layer of insulation units unless multiple layers are otherwise shown or required to make up total thickness or to achieve R-value.

3.3 INSTALLATION OF SLAB INSULATION

A. On vertical slab edge and foundation surfaces, set insulation units using manufacturer's recommended adhesive according to manufacturer's written instructions.

1. If not otherwise indicated, extend insulation a minimum of 24 inches below exterior grade line.

3.4 INSTALLATION OF FOUNDATION WALL INSULATION

A. Butt panels together for tight fit.

B. Anchor Installation: Install board insulation on concrete substrates by adhesively attached, spindle-type insulation anchors as follows:

1. Fasten insulation anchors to concrete substrates with insulation anchor adhesive according to anchor manufacturer's written instructions.
2. Space anchors according to insulation manufacturer's written instructions for insulation type, thickness, and application.
3. Apply insulation standoffs to each spindle to create cavity width indicated on Drawings between concrete substrate and insulation.
4. After adhesive has dried, install board insulation by pressing insulation into position over spindles and securing it tightly in place with insulation-retaining washers, taking care not to compress insulation.
5. Where insulation will not be covered by other building materials, apply capped washers to tips of spindles.

C. Adhesive Installation: Install with adhesive or press into tacky waterproofing or dampproofing according to manufacturer's written instructions.

3.5 INSTALLATION OF INSULATION IN FRAMED CONSTRUCTION

A. Blanket Insulation: Install in cavities formed by framing members according to the following requirements:

1. Use insulation widths and lengths that fill the cavities formed by framing members. If more than one length is required to fill the cavities, provide lengths that will produce a snug fit between ends.
2. Place insulation in cavities formed by framing members to produce a friction fit between edges of insulation and adjoining framing members.
3. Maintain 3-inch clearance of insulation around recessed lighting fixtures not rated for or protected from contact with insulation.
4. Attics: Install eave ventilation troughs between roof framing members in insulated attic spaces at vented eaves.
5. For metal-framed wall cavities where cavity heights exceed 96 inches, support unfaced blankets mechanically and support faced blankets by taping flanges of insulation to flanges of metal studs.

B. Miscellaneous Voids: Install insulation in miscellaneous voids and cavity spaces where required to prevent gaps in insulation using the following materials:

1. Glass-Fiber Insulation: Compact to approximately 40 percent of normal maximum volume equaling a density of approximately 2.5 lb/cu. ft..

2. Spray Polyurethane Insulation: Apply according to manufacturer's written instructions.
3. Where indicated on drawings, apply closed-cell spray polyurethane foam to interior side of walls to form continuous insulation and air barrier. Coordinate with furring depth to avoid compression and maintain full insulation thickness behind studs.

3.6 PROTECTION

A. Protect installed insulation from damage due to harmful weather exposures, physical abuse, and other causes.

B. Provide temporary coverings or enclosures where insulation is subject to abuse and cannot be concealed and protected by permanent construction immediately after installation.

C. Do not leave exposed foam-plastic insulation overnight in occupied areas. Protect with fire-retardant covering or gypsum board immediately after installation.

3.7 COORDINATION

A. Coordinate insulation R-values and thicknesses with energy code compliance documentation and drawings.

END OF SECTION 072100

SECTION 072726 - FLUID-APPLIED MEMBRANE AIR BARRIERS

PART 1: GENERAL

1.01. GENERAL REQUIREMENTS

A. The General Conditions, Supplementary Conditions, Instructions to Bidders, and Division 01- General Requirements shall be read in conjunction with and govern this section.

B. All parties concerned shall read this Specification as a whole. Each Section may contain more or less than the complete Work of any trade. The General Contractor is solely responsible to make clear to the installing Subcontractor(s) the extent of their Work.

1.02. SUMMARY

A. This Section includes requirements for supplying labor, materials, tools, and equipment to complete the Work as shown on the Drawings Architectural Division as specified herein including, but not limited to, the following:

1. Fluid Applied Air and Vapor Barrier
2. Flashings
3. Flashing Primer
4. Sealant
5. Thru-wall Flashing

B. Air barrier transitions to roofing are limited to wall-to-roof interfaces at eaves, rakes, and parapets where applicable. This Section does not require air barrier application beneath steep-slope asphalt shingle roofing.

1.03. RELATED REQUIREMENTS

A. Section 033000 - Cast In Place Concrete

B. Section 042000 – Unit Masonry

C. Section 061600 - Sheathing

D. Section 071000 – Bituminous Damp-proofing

E. Section 072100 - Thermal Insulation

F. Section 076200 - Sheet Metal Flashing and Trim

G. Section 075216 - SBS Modified Bituminous Roofing

H. Section 079200 - Joint Sealants

I. Division 08 - Entrances, Storefronts, and Curtain Walls

1.04. REFERENCES

A. American Architectural Manufacturers Association (AAMA):
1. AAMA /FGIA 2400, Standard Practice for Installation of Windows with a Mounting Flange in Stud Frame Construction (latest edition).

B. American Society for Testing and Materials (ASTM):
1. ASTM D412, Standard Test Method for Vulcanized Rubber and Thermoplastic Elastomers - Tension
2. ASTM D2243, Standard Test Method for Freeze-Thaw Resistance of Water-Borne Coatings
3. ASTM D5590, Standard Test Method for Determining the Resistance of Paint Films and Related Coatings to Fungal Defacement by Accelerated Four-Week Agar Plate Assay
4. ASTM E84, Standard Test Method for Surface Burning Characteristics of Building Materials
5. ASTM E96, Standard Test Methods for Water Vapor Transmission of Materials
6. ASTM E1677, Standard Specification for Air Barrier (AB) Material or System for Low-Rise Framed Building Walls
7. ASTM E2112, Standard Practice for Installation of Exterior Windows, Doors and Skylights
8. ASTM E2178, Standard Test Method for Air Permeance of Building Materials
9. ASTM E2357, Standard Test Method for Determining Air Leakage of Air Barrier Assemblies
10. ASTM D4541, Standard Test Method for Pull-Off Strength of Coatings Using Portable Adhesion Testers.
11. ASTM E1186, Standard Practices for Air Leakage Site Detection in Building Envelopes and Air Barrier Systems.
12. ASTM E779, Standard Test Method for Determining Air Leakage Rate by Fan Pressurization (optional whole-building test, see 3.04.C).

C. National Fire Protection Agency (NFPA):
1. NFPA 285, Standard Fire Test Method for Evaluation of Fire Propagation Characteristics of Exterior Non-Load-Bearing Wall Assemblies Containing Combustible Components - Where required by code for the proposed wall assembly.

1.05. ADMINISTRATIVE REQUIREMENTS

A. Pre-installation meetings:
1. When required, and with prior notice, an Air Barrier Manufacturer representative will meet with the necessary parties at the jobsite to review and discuss project conditions as it relates to the integrity of the assembly.

1.06. SUBMITTALS

A. Action Submittals:
1. Product Data:
   a. Air Barrier Manufacturer’s guide specification.
   b. Air Barrier Manufacturer’s technical data sheets.
   c. Air Barrier Manufacturer’s details.
2. Certificates:
   a. Product certification that the assembly components are supplied and warranted by single source Air Barrier Manufacturer.
3. Tests and Evaluation Reports:
   a. NFPA 285 wall assembly compliance (Where required by code for the proposed wall assembly):
      1. Air Barrier Manufacturer statement that anticipated wall assembly complies with NFPA 285 where required by code for the proposed wall assembly.
   b. ASTM E2357 assembly test report for a substantially similar wall build-up or an ABAA Evaluation listing.

c. Compatibility letters for sealants, membranes, and primers used in the assembly (single-source preferred).

4. Sample warranty as specified.

1.07. QUALITY ASSURANCE

A. Single Source Responsibility:

1. Obtain air barrier, flashings, sealants and primers from a single Air Barrier Manufacturer regularly engaged in the manufacturing and supply of the specified products.
2. Verify product compliance with federal, state, and local regulations.

B. Manufacturer Qualifications:

1. Air Barrier Manufacturer must not issue warranties for terms longer than they have been manufacturing and supplying specified products for similar scope of Work.

C. Installer Qualifications:

1. Perform Work in accordance with Air Barrier Manufacturer published literature and as specified in this section.
2. Maintain one (1) copy of Air Barrier Manufacturer's installation instructions on site.
3. Allow the Air Barrier Manufacturer representative site access during installation.
4. Contact the Air Barrier Manufacturer a minimum of two weeks prior to scheduling a meeting.

D. ABAA Credentials: Air barrier installer shall be ABAA certified (or equivalent training acceptable to Architect) for the proposed fluid-applied system; provide current accreditation letter. Use an ABAA-evaluated product/system where available.

E. Third-Party Quality Assurance (When Required):

1. The Owner or Architect may, at their discretion, engage a third-party air barrier consultant or auditor to perform periodic site observations of air barrier installation for general conformance with the Contract Documents and the Air Barrier Manufacturer's published requirements.
2. The installing subcontractor shall provide reasonable access to Work areas and shall cooperate with site observations and requested documentation.
3. If observed deficiencies or non-conforming Work are documented by the Architect or third-party auditor, correct such deficiencies and re-perform Work as necessary to achieve compliance with the Contract Documents and manufacturer's requirements. Corrective Work shall be limited to documented non-conformance and shall be performed in accordance with Contract requirements.
4. Third-party observations do not relieve the Contractor of responsibility for proper installation, nor do they constitute acceptance of the Work.

1.08. MOCK-UPS

A. Mock-ups:

1. Where indicated on Drawings, construct mock-ups to verify selections made under submittals and to set quality standards for materials and execution.

1.9. DELIVERY, STORAGE, AND HANDLING

A. Delivery of Materials:

1. Deliver materials to the jobsite in undamaged and clearly marked containers and/or wrapping indicating the name of the Air Barrier Manufacturer and product.

B. Storage of Materials:

1. Store materials as recommended by the Air Barrier Manufacturer and conform to applicable safety regulatory agencies. Refer to all applicable data including, but not limited to, Safety Data Sheets, Product Data sheets, product labels, and specific instructions for personal protection.
2. Keep solvents away from open flame or excessive heat.
3. Store rolled materials on end.

C. Handling:
1. Product requirements may vary. Refer to product specific Safety Data Sheet.

1.10. SITE CONDITIONS

A. Environmental Requirements:
1. Do not perform Work during rain.
2. Do not perform Work on frost covered or wet substrates.
3. Product requirements may vary. Refer to product specific Technical Data Sheet.
4. Substrate Moisture: Do not apply over sheathing or CMU/concrete exceeding manufacturer's maximum moisture content; verify with moisture meter per manufacturer's TDS.
5. Dew Point: Substrate temperature shall be at least 5°F (3°C) above dew point during application and cure.
6. UV Exposure Limit: Do not leave exposed to sunlight longer than 180 days (or manufacturer's stated limit), whichever is less.

B. Protection:
1. It is the responsibility of the installing Subcontractor to protect all surfaces not included in scope of Work from damage.
2. Protect top and backside of substrate walls against bulk water during and after application of air barrier.

C. Complete preparation Work prior to installing the air barrier assembly.

1.11. WARRANTY

A. Manufacturer System Warranty: Provide 10-year system warranty covering the fluid-applied membrane and manufacturer-supplied transition flashings, primers, and sealants, including air/water leakage through the warranted system.

B. Installer Warranty: Provide 2-year workmanship warranty covering defects in installation and resulting leaks/air leakage.

PART 2: PRODUCTS

2.01. MANUFACTURER

A. Basis of Design: Henry Company

B. Or Approved Equal.

2.02. MATERIALS

A. Obtain air barrier and auxiliary materials as a single-source system from the Air Barrier Manufacturer to ensure compatibility and compliance with the following requirements:
1. Minimum Application Temperature: +20 °F (-6 °C)
2. Service Temperature: -40 °F to +180 °F (-40 °C to +82 °C)

3. Water Vapor Permeance (ASTM E96): Match selected membrane type: vapor-impermeable ~0.03 perms (Procedure A) or vapor-permeable 10–15 perms (typ.).
4. Water Absorption (ASTM D570): 4.6%
5. Surface Burning Characteristics (ASTM E84):
   a. Flame Spread Index: 20, Class A
   b. Smoke developed: 85, Class A
6. VOC Content: Adhesives and primers shall comply with EPA Method 24 VOC limits for their application type: ≤450 g/L for exterior use; ≤50 g/L for interior or enclosed spaces. Provide manufacturer-recommended compatible adhesives and primers meeting these limits.
7. Assembly Air Leakage (ASTM E2357): Proposed wall assembly with the specified air barrier shall have air leakage ≤0.04 cfm/ft² @ 1.57 psf (0.2 L/s·m² @ 75 Pa).
8. Material Air Permeance (ASTM E2178): ≤0.004 cfm/ft² @ 1.57 psf (0.02 L/s·m² @ 75 Pa).
9. NFPA 285 Compliance (Where required by code for the proposed wall assembly): Submit tested assembly reports or an engineered analysis letter confirming proposed wall build-up (including insulation, claddings, WRB, flashings, and combustible components) complies. “Complies in various assemblies” is not sufficient without submittal matching.

B. Fluid Applied Air and Vapor Barrier (Basis of Design):
1. Single-component, water-based, water-resistive air barrier designed to provide a vapor impermeable air and water barrier when applied on above-grade wall assemblies, having the following typical properties:
   a. Basis of Design: Henry Company
      1. Air-Bloc 16MR (vapor-impermeable); use at CMU and concrete backup walls.
      2. Air-Bloc 33MR or equal (vapor-permeable, Class III); use at light-gauge framed wall assemblies with exterior sheathing and cavity insulation.
      3. Coordinate transition between vapor-permeable and vapor-impermeable air barriers per manufacturer’s published details to maintain continuity of the air barrier plane.
   b. Color: Gray
   c. Solids Content:
      1. Weight: 69%
      2. Volume: 60%
   d. Minimum Application Temperature: +20 °F (-6 °C)
   e. Service Temperature: -40 °F to +180 °F (-40 °C to +82 °C)
   f. Water Vapor Permeance (ASTM E96):
      1. Air-Bloc 16MR – 0.03 perms (vapor-impermeable)
      2. Air-Bloc 33MR – 10 to 15 perms (vapor-permeable)
   g. Air Permeance (ASTM E2178): 0.0013 L/s·m² @ 75 Pa
   h. Elongation (ASTM D412): 270% minimum
   i. Tensile Strength (ASTM D412): 100 psi minimum
   j. Water Absorption (ASTM D570): 4.6% maximum
   k. Surface Burning Characteristics (ASTM E84): Flame Spread 20, Smoke Developed 85 (maximum), Class A
   l. Fire Testing (NFPA 285): Complies in tested wall assemblies; provide specific report for each wall type used. Applies only where required by code for the proposed wall assembly.
   m. VOC Content, max (EPA Method 24): ≤50 g/L Method 24

C. Auxiliary Materials:
   1. Self-Adhered Flashings:

a. Install at rough openings, sheathing joints (if specified), and other discontinuities prior to field membrane application.
b. Coordinate flashing vapor control and primer with adjacent air-barrier type:
1. At CMU and concrete walls using Air-Bloc 16MR (vapor-impermeable): use Henry Blueskin® SA or equal (vapor-impermeable flashing) with Blueskin® Adhesive, LVC Adhesive, or Aquatac™ Primer as recommended for temperature and exposure conditions.
2. At framed wall assemblies using Air-Bloc 33MR (vapor-permeable): use Henry Blueskin® VP160 or equal (vapor-permeable flashing) with Aquatac™ Primer or other manufacturer-approved water-based primer.
3. Use low-VOC primers (≤ 50 g/L) in interior or enclosed conditions; higher-VOC primers permitted exterior-only. Do not use solvent-borne primers within enclosed, occupied interiors.

2. Sealants:
a. Moisture-Cure, medium-modulus, polymer-modified sealant compatible with the selected air-barrier system.
b. Basis of Design: Henry 925 BES Sealant, complying with ASTM C920, Type S, Grade NS, Class 35 and Fed. Spec. TT-S-00230C, Type II, Class A.

3. Thru-Wall Flashing:
a. Self-adhered, SBS-modified bituminous thru-wall flashing, minimum 40 mils, laminated to a polymeric film facer, vapor-impermeable.
b. Coordinate with masonry and air-barrier system to maintain continuity and compatibility.

PART 3: EXECUTION

3.01. EXAMINATION

A. It is the installing Subcontractor's responsibility to verify the substrate is in accordance with Air Barrier Manufacturer requirements and as specified in this Section prior to installation of air barrier. Commencement of the Work or any parts thereof, indicates installer acceptance of the substrate.

1. Acceptable substrates include exterior-grade gypsum sheathing, plywood, OSB, precast or cast-in-place concrete, CMU, primed steel, aluminum mill finish, anodized aluminum, and galvanized metal.
2. Verify surfaces are sound, clean and free of frost, oil, grease, dirt, excess mortar or other contaminants.
3. Substrate must be continuous and secure.
4. Sheathing fasteners must be installed into solid backing and set flush with sheathing.
5. CMU: Tool mortar joints flush or concave; allow to cure **minimum 3 days** (or per manufacturer) before application; remove laitance and bond breakers.
6. Concrete: Remove formwork; allow minimum 7 days cure or as required by manufacturer; fill bugholes and tie-holes flush; grind fins; surface shall be SSPC-SP13/NACE 6 concrete surface prep level CSP-2 to CSP-4 equivalent where required for adhesion.
7. Top and backside of substrate walls must be protected against bulk water during and after application of air barrier.

8. If curing compounds are present, they shall be non-resin, non-wax, non-oil bond-breaking agents; remove bond breakers prior to application Substrates must be free of form release agents.

B. Notify contractor in writing of any conditions that are not acceptable.

C. Do not apply air barrier assembly components until substrate and environmental conditions are in accordance with Air Barrier Manufacturer's published literature.

3.02. PREPARATION

A. Verify surfaces are in accordance with the product specific technical data sheet and as stated in this specification.

B. Protection:
1. Protect top and backside of substrate walls against bulk water during and after application of air barrier.

3.03. INSTALLATION

A. Environmental Requirements:
1. Do not perform Work during rain or inclement weather.
2. Do not perform Work on frost covered or wet substrates; may be applied to sound, surface-dry substrates in accordance with manufacturer's TDS.
3. Do not perform Work when ambient (air) and substrate temperatures are below 20 °F (-6 °C).

B. Refer to Air Barrier Manufacturer detail drawings for installation procedures including, but not limited to, the following:
1. Changes in substrate
2. Control joints
3. Crack treatment
4. Inside corners
5. Outside corners
6. Penetrations
7. Rough openings
8. Sheathing Joints

C. Moving Joints:
1. Contact Air Barrier Manufacturer.

D. Contact Air Barrier Manufacturer to coordinate transition of air barrier to adjacent areas including, but not limited to, the following:
1. Roofing
2. Waterproofing
3. Fastener penetrations

E. Thru-Wall Flashing:
1. Coordinate with Division 04 Specification Sections.

F. Primary Air Barrier
1. Install air barrier assembly in accordance with Air Barrier Manufacturer product specific TDS, details, guide specification, and technical bulletins to create a monolithic air and watertight application without sags, runs or voids.
2. Lap air barrier onto flashing minimum 2 inches (51 mm)
3. Application Rate:
a. Application rates and cured dry film thickness are approximate and may vary

depending on texture and porosity of surface.

b. Smooth surfaces:
   1. Wet film thickness (WFT): 60 mils
   2. Dry film thickness (DFT): 36 mils

c. Rough surfaces:
   1. Wet film thickness (WFT): 90 mils
   2. Dry film thickness (DFT): 54 mils

G. Transitions: Tie air barrier to roofing, waterproofing, and fenestration per manufacturer's published transition details; lap shingle-fashion, minimum 2″ (51 mm), unless otherwise detailed.

H. Sealant Compatibility: Sealants in contact with the air barrier shall be manufacturer-approved for chemical compatibility and long-term adhesion.

I. Fasteners & Penetrations: Seal all through-fasteners and penetrations **at time of installation** with manufacturer-approved detailing sealant or liquid flashing.

J. Movement Joints: At building seismic/expansion joints, use manufacturer's tested movement detail; do not bridge joints rigidly.

K. Product Selection by Substrate: Apply vapor-impermeable membrane (Air-Bloc 16MR) at CMU and concrete back-up walls; apply vapor-permeable membrane (Air-Bloc 33MR or equal) at light-gauge framed wall assemblies with exterior sheathing and cavity insulation.

3.04. FIELD QUALITY CONTROL

A. Contractor Quality Control: Maintain a daily QC log with substrate conditions (including moisture), ambient/substrate temps, dew point, WFT readings, locations, and photos.

B. Adhesion Testing: Perform ASTM D4541 (pull-off) or manufacturer's field adhesion procedure at start of work and one per elevation per 10,000 SF; minimum adhesion per manufacturer (typically ≥10–15 psi for fluid membranes). Repair test areas.

C. Optional Whole-Building Test: Perform ASTM E779 blower-door test when directed by Owner or Architect. Target ≤0.40 cfm/ft² @ 75 Pa for the building enclosure unless otherwise specified.

D. Final Observation: Architect/GC/Manufacturer to observe representative areas prior to cladding. Manufacturer to provide written installation letter (pass/fail with punch-list if applicable).

3.05. CLEANING

A. As the Work proceeds, and upon completion, promptly clean up and remove from the premises all rubbish and surplus materials resulting from the foregoing Work.

B. Clean soiled surfaces, spatters, and damage to adjacent areas caused by Work of this Section.

C. Check area to ensure cleanliness and remove debris, equipment, and excess material from the site.

END OF SECTION 072726

SECTION 07 42 14.001 - METAL WALL PANELS

PART 1 – GENERAL

1.1 RELATED DOCUMENTS

A. Drawings and general provisions of the Contract, including General Supplementary Conditions and Division 1 Specification Sections apply to this section.

1.2 SUMMARY

A. This section includes pre-formed, concealed standing seam wall panel system complete with anchor clips, fasteners, flashing, and trim.

B. Related Sections:
1. Section 07 05 00 – Common Work Results for Thermal and Moisture Protection

C. Related Work Specified Elsewhere:
1. Division 06 Section – Rough Carpentry
2. Division 07 Section – Sheet Metal Flashing and Trim

1.3 REFERENCES

A. American Iron and Steel Institute (AISI)
1. AISI S100 Specification for Design of Cold Formed Steel Structural Members

B. American Society for Testing and Materials (ASTM)
2. ASTM A240 Specification for Heat Resisting Chromium and Chromium-Nickel Stainless Steel Plate, Sheet, and Strip for Pressure Vessels
3. ASTM B209 Specification for Aluminum and Aluminum-Alloy Sheet and Plate
4. ASTM E283 Standard Test Method for Determining Rate of Air Leakage Through Exterior Windows, Curtain Walls, and Doors Under Specified Pressure Differences Across the Specimen.
5. ASTM E331 Standard Test Method for Water Penetration of Exterior Windows, Skylights, Doors, and Curtain Walls by Uniform Air Pressure Differences
6. ASTM E331 Standard Test Method for Structural Performance of Exterior Windows, Doors, Skylights, and Curtain Walls by Uniform Static Air Pressure Difference

C. Sheet Metal and Air Conditioning Contractors National Association (SMACNA):
1. Architectural Sheet Metal Manual

1.4 SUBMITTALS FOR REVIEW

A. Shop Drawings: Show wall panels (and roofing system, if applicable) with flashings and accessories in elevations, sections and details. Include metal thickness and finishes, panel lengths, joining details, anchorage details, flashings and special fabrication provisions for termination and penetrations. Indicate relationships with adjacent and interfacing work. Indicate fastener types and spacing; and provide fastener pullout values. Shop drawings must be completed by the wall panel manufacturer's engineering department. Any and/or all changes recommended by the successful bidder must be approved by the manufacturer in writing prior to submittal.

B. Product Data: Include manufacturer's detailed material and system description, concealed anchor clips, sealant and closure installation instructions, and finish specifications. Indicate fastener types and spacing; and required fastener pullout values.

C. Samples: Upon request, provide full-size samples of the following materials and system components. Samples shall be of identical material type, thickness, panel width, and material grade/alloy as the system specified for this project.
   1. Submit sample of panel section, at least 12" long x full panel width showing panel profile and also a sample of color selected.
   2. Submit sample of panel fasteners.

D. Specimen Warranty: Provide an unexecuted copy of the warranty specified for this Project, identifying the terms and conditions required of the Manufacturer and the Owner.

E. Any material submitted as equal to the specified material must be accompanied by a report signed and sealed by a professional engineer licensed in the state in which the installation is to take place. This report shall show that the submitted equal meets the Design and Performance criteria in this specification. Substitution requests submitted without licensed engineer approval will be rejected for non-conformance.

1.5 SUBMITTALS FOR INFORMATION

A. Design and Test Reports: Provide the following certified test reports from an independent testing laboratory:
   1. Independent laboratory testing report for system design load and seam integrity.
   2. A letter from an officer of the manufacturing company certifying that the materials furnished for this project are the same as represented in tests and supporting data.
   3. Manufacturer's verifications that the panels are factory roll formed.
   4. ASTM E283 Test results must clearly demonstrate compliance with the performance requirements specified in article 1.11 ASTM E331 Test Report.
   5. ASTM E330 Test results must clearly demonstrate compliance with the performance requirements specified in article 1.11.
   6. ASTM E331 Test results must clearly demonstrate compliance with the performance requirements specified in article 1.11.

B. Mill production reports certifying that the metal thicknesses are within allowable tolerances of the nominal or minimum thickness or gauge specified.

C. Design Loads: Submit copy of manufacturer's minimum design load calculations according to ASCE 7, Method 2 for Components and Cladding. In no case shall the design loads be taken to be less than those detailed in Design and Performance Criteria article.

D. Qualification Data for Wall System Installer: Refer to Quality Assurance Article below.

E. Certification of work progress inspection frequency: Refer to Quality Assurance Article below.

F. Pre-installation Conference Proceedings: Refer to Quality Assurance Article below.

G. Test Reports: Submit third party validation of environmental claims, prepared by UL Environment, for all metal wall panels containing recycled content and/or bio based content.

1.6 CONTRACT CLOSEOUT SUBMITTALS

A. General: Comply with Requirements of Division 01 Section Closeout Submittals.

B. Special Project Warranty: Provide specified warranty for the Project, executed by the authorized agent of the Manufacturer.

C. Wall Panel Maintenance Instructions: Provide a manual of manufacturer's recommendations for maintenance of installed systems.

D. Insurance Certification: Assist Owner in preparation and submittal of wall installation acceptance certification as may be necessary in connection with fire and extended coverage insurance on wall panel system installation and associated work.

E. Demonstration and Training Schedule: Provide a schedule of proposed dates and times for instruction of Owner's personnel in the maintenance requirements for completed wall panel system installation work. Refer to Part 3 for additional requirements.

1.7 QUALITY ASSURANCE

A. Installer Qualifications: Engage an Installer who has completed the Manufacturer's Approved Contractor course and is currently certified for the installation of the specified system.

B. If required, fabricator/installer shall submit work experience and evidence of adequate financial Responsibility. The Owner's representative reserves the right to inspect fabrication facilities in determining qualifications.

C. Source Limitations: Obtain all components of the wall panel system from the metal roof system manufacturer. Secondary products that are required shall be recommended and approved in writing by the Manufacturer.
   1. Upon request of the Architect or Owner, submit Manufacturer's written approval of secondary components in list form, signed by an authorized agent of the Manufacturer.
   2. Manufacturer shall have direct authority and control over all fabrication of steel components as well as the raw materials used in their fabrication.

D. Source Quality Control: Manufacturer shall have in place a documented, standardized quality control program such as ISO-9001 approval.

1.8 PRE-INSTALLATION CONFERENCE

A. Convene a pre-installation conference approximately two (2) weeks before scheduled commencement of system installation and associated work.

B. Require attendance of installer of each component of associated work which must precede or follow wall panel work (including mechanical or electrical work if any), Architect, Owner, system manufacturer's representative, and other representatives directly concerned with performance of the Work, including (where applicable) Owner's insurers, testing agencies and governing authorities.

C. Objectives of conference to include:

1. Review foreseeable methods and procedures related to work, including set up and mobilization areas for stored material and work area.
2. Tour representative areas of building, inspect and discuss condition of substrates, penetrations and other preparatory work performed by others.
3. Review structural loading limitations of wall framing and inspect for unacceptable variations in planarity.
4. Review system requirements (drawings, specifications and other contract documents).
5. Review required submittals both completed and yet to be completed.
6. Review and finalize construction schedule related to work and verify availability of materials, installer's personnel, equipment and facilities needed to make progress and avoid delays.
7. Review required inspection, testing, certifying and material usage accounting procedures.
8. Review weather and forecasted weather conditions and procedures for unfavorable conditions, including possibility of temporary wall protection (if not mandatory requirement).
9. Record discussion of conference including decisions and agreements (or disagreements) reached. Furnish copy of record to each party attending. If substantial disagreements exist at conclusion of conference, determine how disagreements will be resolved and set date for reconvening conference.
10. Review notification procedures for weather or non-working days.

D. The Owner's Representative will designate one of the conference participants to record the proceedings and promptly distribute them to the participants for record.

E. The intent of the conference is to resolve issues affecting the installation and performance of wall panel work. Do not proceed with work until such issues are resolved the satisfaction of the Owner and Engineer of Record. This shall not be construed as interference with the progress of Work on the part of the Owner or Engineer of Record.

1.9 DELIVERY, STORAGE, AND HANDLING

A. Manufacturer's Responsibilities:
1. All panels shall be shipped from the manufacturer with a strippable film or similar packaging material separating the individual panels to minimize flexing, stressing, scratching or otherwise damaging the material during transit to the job.
2. Fully cover steel with tarpaulins or similar protective cover during transit to prevent dirt and debris from coming in contact with the finished goods.

B. Installer's Responsibilities:
1. Stack pre-finished materials to prevent twisting, bending, abrasion and denting and elevate one end to facilitate moisture run-off.
2. Unload wall panels using a boom or crane, supporting the panels in at least two locations during lifting, and never lift more than three panels at a time.
3. Protect moisture-sensitive materials and water-based from the weather.
4. Inspect materials upon delivery. Reject and remove physically damaged or marred material from project site.

1.10 PROJECT CONDITIONS

A. Determine that work of other trades will not hamper or conflict with necessary fabrication and storage and protection requirements for wall panel system.
1. Protection:

a. Protect completed work from subsequent construction operations. Comply with Manufacturer's recommendations.
b. Do not encumber the site with stored materials or equipment.
c. Do not support wall-mounted equipment directly on the wall panel system.

B. Ascertain that work of other trades which penetrates the wall or is to be made watertight by the wall is in place and approved prior to installation.

1.11 DESIGN AND PERFORMANCE CRITERIA

A. Thermal Expansion and Contraction:
1. Completed metal wall panel and flashing system shall be capable of withstanding expansion and contraction of components caused by changes in temperature without buckling, producing excess stress on structure, anchors or fasteners, or reducing performance ability.
2. The design temperature differential shall be not less than 200 °F.
3. Interface between panel and clip shall provide for unlimited thermal movement in each direction along the longitudinal direction.

B. Uniform wind load capacity:
1. Installed wall panel system shall withstand negative design wind loading pressures complying with the following criteria. Anchor clips shall be installed exactly as specified in article 3.
a. Design Code: ASCE 7, Method 2 for Components and Cladding.
b. Safety Factor: 1.67 after any load reduction or material stress increase.
c. Category IV Building with an Importance Factor of 1.00
d. Wind Speed: 128 mph
e. Ultimate Pullout Value: 360 pounds per each of the two fasteners holding the panel anchor to the wall substrate or framing system.
f. Exposure Category: C
g. Wall Height: 27 feet
h. Minimum Building Width: 340 feet
i. Wall Area Design Wind Pressure:
i. Zone 4 – 28.0 psf.
ii. Zone 5 – 33.0 psf.
2. Capacity shall be determined using uniform static air pressure method in accordance with ASTM E330. Allowable safe working loads shall be determined by dividing the ultimate test load by the safety factor specified above.

C. ASTM E283: Static pressure air infiltration (doors, windows, curtain walls):
1. Pressure Leakage Rate
a. 1.57 PSF 0.0033 cfm/sq. ft.
b. 6.24 PSF 0.0056 cfm/sq. ft.
c. 12.0 PSF 0.062 cfm/sq. ft.
d. 15.0 PSF 0.064 cfm/sq. ft
e. 20.0 PSF 0.074 cfm/sq. ft.

D. ASTM E330: Uniform static load test for structural performance for 1 ½" panel profile: Test results must provide an allowable pressure of no less than:
1. 42 lbs/sqft. For 3'-0" spans
2. 52 lbs/sqft for 1'-0" span

E. ASTM E331: Static pressure water infiltration (doors, windows, curtain walls):

1. Pressure Result:
    a. 5 Gal./Hr. per S.F. and Static No Leakage
    b. Pressure of 20.0 Psf. For 15 minutes.

1.12 WARRANTIES

A. Manufacturer shall execute a single warranty covering of the following criteria. Multiple-source warranties are not acceptable.
1. Metal wall panels will be an integral part of the overall new roof system design and shall be incorporated within roof system manufacturer's 30-year Edge to Edge warranty.
2. Manufacturer's standard thirty (30) year finish warranty covering checking, crazing, peeling, chalking, fading, or adhesion.
3. Installer's five (5) year warranty covering wall panel system installation.
4. Warranties shall commence on date of Substantial Completion.
5. Provide a watertight warranty by a single approved manufacturer for roof areas, wall areas, and transitions between systems.

1.13 MANUFACTURER'S INSPECTIONS

A. When the project is in progress, the wall panel system manufacturer will inspect the work not less than 3 days per week. In addition, the manufacturer will:
1. Keep the Architect or Owner informed as to the progress and quality of the work as observed.
2. Report to the Architect in writing any failure or refusal of the Contractor to correct unacceptable practices called to the Contractor's attention.
3. Confirm after completion that manufacturer has observed no applications procedures in conflict with the specifications other than those that may have been previously reported and corrected.

PART 2 – PRODUCTS

2.1 PRODUCTS, GENERAL

A. Refer to Division 01 Section "Common Product Requirements."

B. Basis of Design: Materials, manufacturer's product designations, and/or manufacturer's names specified here in shall be regarded as the minimum standard of quality required for work of this Section. Comply with all manufacturer and contractor/fabricator quality and performance criteria specified in Part 1.

C. Substitutions: Products proposed as equal to the products specified in this Section shall be submitted in accordance with Bidding Requirements and Division 01 provisions.
1. Proposals shall be accompanied by a copy of the manufacturer's standard specification section. That specification section shall be signed and sealed by a professional engineer licensed in the state in which the installation is to take place. Substitution requests containing specifications without licensed engineer certification shall be rejected for non-conformance.
2. Include a list of three (3) projects of similar type and extent, located within a one hundred mile radius from the location of the project. In addition, the three projects must be at least five (5) years old and be available for inspection by the Architect, Owner or Owner's Representative.
3. Equivalency of performance criteria, warranty terms, submittal procedures, and contractual terms will constitute the basis of acceptance.

4. The Owner's decision regarding substitutions will be considered final. Unauthorized substitutions will be rejected.

2.2 ACCEPTABLE MANUFACTURERS

A. Provide wall panels manufactured by roof system manufacturer.

B. Site Formed Panels: Bidder will not be allowed to supply panels formed at the job-site on portable roll formers; metal panels must be factory pre-manufactured and engineered for this project.

2.3 METAL WALL PANEL SYSTEM

A. General
1. The products, quality, and performance criteria specified shall be regarded as the minimum standard of quality required for the project.
2. Basis of Design: Garland R-MER Wall Pan System manufactured by The Garland Company, Cleveland, OH or approved equal.

B. Materials
1. Panel material: 24 gauge galvanized steel.
2. Flashing and flat stock material: Fabricate in profiles indicated on drawings of same material, thickness, and finish as wall panel system, unless indicated otherwise.

C. Finish on surfaces:
1. Exposed surfaces for coated panels:
a. Two coat coil applied, baked-on full-strength (70% resin) fluorocarbon coating system (polyvinylidene fluoride, PVF2), applied by manufacturer's approved applicator.
b. Coating system shall provide nominal 1.0 mil dry film thickness, consisting of primer and color coat.
c. Color shall be selected from manufacturer's standard color selection.
2. Unexposed surfaces for coated panels shall be baked-on polyester coating with .20 - .30 dry film thickness (TDF).
3. Exposed and unexposed surfaces for uncoated panels shall be as shipped from the mill.

D. Characteristics:
1. Fabrication: Panels shall be factory roll-formed from the specified metal. Field rolled panels will not be allowed.
2. Configuration: Interlocking flush/flat seams incorporating concealed anchor clips. Through fastened or exposed fastener systems are not acceptable.
3. Panel seam legs shall be one and one half (1 ½) inch nominal concealed depth behind the panel face. Seam shall allow for expansion and contraction of panels due to thermal changes.
4. Anchor clips: Clips shall be 22 stainless steel designed to allow thermal movement of the panel in each direction along the longitudinal dimension.
5. Panel Width (Seam Spacing): 12" nominal.
6. Panel lengths: Full length without joints to the extent as is practical.
7. Profile of panel face shall have mesas continuous throughout panel which are a minimum of one and one half (1 ½) inches wide. These will absorb thermal stresses, reduce oil canning, and provide aesthetic appeal.

E. Accessories:

1. Fasteners:
    a. Concealed fasteners: Corrosion resistant steel screws, #10 x 1" long, pancake head, Phillips drive. Use self-drilling, self-tapping for metal substrate or A-point for plywood substrate.
    b. Exposed fasteners: Series 410 stainless steel screws or one eighth (1/8) inch diameter stainless steel waterproof rivets. All exposed fasteners shall be factory painted to match the color of the wall panels.
2. Provide all miscellaneous accessories for complete installation.

2.4 ACCESSORY PRODUCTS

A. Sealant:
1. Acceptable product:
    a. Concealed Application: Non-curing butyl sealant or equal.
    b. Exposed Application: Garland SS sealant or equal.
2. Colors: As selected by architect from sealant manufacturer's standard selection.

B. Wall Substrate:
1. Install ¾" or 7/8" high x 22 gauge (minimum) galvanized steel hat sections to wall structural substrate. Hat sections shall be installed perpendicular to panel seams, and shall be spaced twenty-four (24) inches on center maximum.

C. Underlayment:
1. Underlayment shall be applied to all solid substrates before installation of metal panels.
2. Underlayment shall be one layer of 25 mil vapor permeable air barrier membrane: Intelliwrap SA or approved equal.
3. Seams shall be lapped in accordance with manufacturer's recommendations.

2.5 FABRICATION

A. Shop fabricate flashing components to the maximum extent possible, forming metal work with clear, sharp, straight, and uniform bends and rises. Hem exposed edges of flashings.

B. Form flashing components from full single width sheet in minimum ten (10'-0") feet sections. Provide shop fabricated, mitered corners, joined using closed end pop rivets and joint sealant.

C. Fabricate panels and related sheet metal work in accordance with approved shop drawings and applicable standards.

PART 3 – EXECUTION

3.1 EXECUTION, GENERAL

A. Comply with requirements of Division 01 Section "Common Execution Requirements."

3.2 PREPARATION

A. Inspection: Examine the alignment and placement of the building structure and substrate. Correct any objectionable warp, waves or buckles in the substrate before proceeding with installation of the pre-formed metal panels.

B. Pre-installation conference: Prior to beginning metal wall panel work, convene a pre-installation conference as specified in Part 1 of this Specification.

C. It is understood that the ongoing operations of the Owner area of a critical nature as to leak sensitivity. Do not work on more wall area than can be restored completely watertight in one day.

3.3 INSTALLATION, GENERAL

A. Install wall system when the atmospheric dry bulb temperature is minimum forty (40) degrees Fahrenheit and rising.

B. Install all components of the wall system in exact accordance with the manufacturer's standard published procedures as applicable to these project conditions and substrates.

3.4 PREPARATION

A. Remove loose coatings, counterflashings, and equipment attached/mounted to wall.

B. Prime substrate with manufactuere's recommended primer.

C. Install all subframing components (steel hat sections) according to manufacturer's recommendations. Hat sections shall be oriented in horizontal rows and spaced 2' on center between rows.

3.5 UNDERLAYMENT INSTALLATION

A. Install continuous underlayment membrane required by roofing and wall system manufacturer to prepared wall surface. Install zee purlins or hat sections in horizontal rows no more than 24" on center.
   1. Apply SA Primer to wall surface at 1/3 to ½ gallon per 100 sq. ft., allow minimum 2 hours to dry tack free. Surface must be covered within 48 hours or re-primed.
   2. Seal openings or cracks greater than ¼" with Intelliwrap Multiband adhesive tape.
   3. Install Intelliwrap SA membrane over substrate. Position membrane on wall and remove split-release liner to adhere to substrate. Ensure full contact of membrane on wall surface and seal laps between course of membrane.

B. Install purlins no more than 24" on center. Attach purlins with expanding masonry anchors, 12" on center minimum, to masonry substrates or with Tek screws or approved equal for attachment to steel substrates.

C. Install insulation, when required, in conjunction with and nested between framing. Protect insulation from weather according to manufacturer's instructions until covered by wall panels.

3.6 WALL PANEL INSTALLATION

A. Comply with all details and install wall panel materials and flashings in accordance with approved Manufacturer's shop drawings and manufacturer's product data within specified erection tolerances.

B. Isolate dissimilar metals and masonry or concrete from metals with bituminous coating. Use gasketed fasteners where required to prevent corrosive action between fastener, substrate, and panels.

C. Limit exposed fasteners to extent indicated on shop drawings.

D. Seal laps and joints in accordance with system manufacturer's product data.

E. Installed system shall be true to line and plane and free of dents, and physical defects. In light gauge panels with wide flat surfaces, some oil canning may be present. Oil canning does not affect the finish or structural integrity of the panel and is therefore not cause for rejection.

F. Form joints in linear sheet metal to allow for one fourth (1/4) inch minimum expansion at twenty (20'-0") feet on center maximum and eight (8'-0") feet from corners.

G. At joints in linear sheet metal items, set sheet metal items in two (2) one fourth (1/4) inch beads of butyl sealant. Extend sealant over all metal surfaces. Mate components for positive seal. Allow no sealant to migrate onto exposed surfaces.

3.7 CLEANING

A. Clean installed work in accordance with the manufacturer's instructions.

B. Replace damaged work than cannot be restored by normal cleaning methods.

3.8 CONSTRUCTION WASTE MANAGEMENT

A. Remove and properly dispose of waste products generated during construction. Comply with requirements of authorities having jurisdiction.

3.9 FINAL INSPECTION

A. At completion of installation and associated work, meet with Contractor, Architect/Engineer, installer, installer of associated work, Owner, system manufacturer's representative, and other representatives directly concerned with performance of system.

B. Inspect work and flashing of penetrations, walls, curbs and other equipment. List all items requiring correction or completion and furnish copy of list to each party in attendance.

C. Repair or replace deteriorated or defective work found at time above inspection as required to a produce an installation which is free of damage and deterioration at time of Substantial Completion and according to warranty requirements.

D. Notify the Architect/Engineer upon completion of corrections.

E. Following the final inspection, provide written notice of acceptance of the installation from the system manufacturer.

F. Immediately correct leakage during construction. If the Contractor does not respond within twenty four (24) hours, the Owner will exercise rights to correct the Work under the terms of the Conditions of the Contract.

3.10 DEMONSTRATION AND TRAINING

A. At a time and date agreed to by the Owner, instruct the Owner's facility manager, or other representative designated by the Owner, on the following procedures:
   1. Troubleshooting procedures

2. Notification procedures for reporting leaks or other problems
3. Maintenance
4. The Owner's obligations for maintaining the warranty in effect and force
5. The Manufacturer's obligations for maintaining the warranty in effect and force

END OF SECTION 074214

SECTION 074646 - FIBER-CEMENT SIDING

PART 1 - GENERAL

1.1 SUMMARY

A. Section Includes:

1. Fiber-cement siding.
2. Fiber-cement soffit.
3. Associated trim and accessory components required for a complete weather-resistant installation.

B. Related Requirements:

1. Section 061000 "Rough Carpentry" for wood furring, grounds, nailers, and blocking.
2. Section 062013 "Exterior Finish Carpentry" for PVC trim.
3. Section 072500 "Weather Barriers" for weather-resistive barriers.
4. Section 076200 ‘Sheet Metal Flashing and Trim’ for flashing adjacent to siding and soffit.
5. Section 099600 “Exterior Painting” for finish requirements and color coordination of exposed fiber cement siding and soffit.

1.2 COORDINATION

A. Coordinate siding installation with flashings and other adjoining construction to ensure proper sequencing.

B. Coordinate installation with window, door, and roof-edge flashings to ensure shingle-style water shedding and continuous drainage plane.

1.3 PREINSTALLATION MEETINGS

A. Preinstallation Conference: Conduct conference at Project site. Conference shall include siding installer, general contractor, roofing contractor, and flashing installer.

1.4 ACTION SUBMITTALS

A. Product Data Submittals: For each type of fiber-cement siding and soffit. Include construction details, material descriptions, dimensions of individual components and profiles, and finishes.

B. Samples for Initial Selection: For fiber-cement siding and soffit including related accessories.

C. Samples for Verification: For each type, color, texture, and pattern required.

1. 12 inch by 12 inch sample panel of siding assembled on plywood backing.

2. 12-inch- by 12 inch sample of soffit assembled on plywood backing.
3. 12-inch- long samples of trim and accessories.

D. Submit manufacturer's current ICC-ES evaluation report demonstrating compliance with IBC and ASTM C1186.

1.5 INFORMATIONAL SUBMITTALS

A. Product Certificates: For each type of fiber-cement siding and soffit.

B. Product Test Reports: Based on evaluation of comprehensive tests performed by a qualified testing agency, for fiber-cement siding.

C. Research/Evaluation Reports: For each type of fiber-cement siding required, from ICC-ES.

D. Sample Warranty: For special warranty.

E. Installer Qualifications: Submit documentation verifying minimum 3 years' experience installing fiber-cement cladding on occupied educational or institutional buildings

1.6 CLOSEOUT SUBMITTALS

A. Maintenance Data: For each type of fiber-cement siding and soffit, including related accessories, to include in maintenance manuals.

B. Warranty Documentation: Include executed manufacturer's 10-year warranty for inclusion in Project closeout package.

1.7 MAINTENANCE MATERIAL SUBMITTALS

A. Furnish extra materials that match products installed and that are packaged with protective covering for storage and identified with labels describing contents.

1. Furnish full lengths of fiber-cement siding and soffit including related accessories, in a quantity equal to 2 percent of amount installed.

1.8 MOCKUPS

A. Build mockups to verify selections made under Sample submittals and to demonstrate aesthetic effects and to set quality standards for fabrication and installation.

1. Build mockup of typical wall area as shown on Drawings.

2. Build mockups for fiber-cement siding and soffit including accessories.

a. Size: 48 inches long by 60 inches high.
b. Include outside corner on one end of mockup.

3. Approval of mockups does not constitute approval of deviations from the Contract Documents contained in mockups unless Architect specifically approves such deviations in writing.

4. Subject to compliance with requirements, approved mockups may become part of the completed Work if undisturbed at time of Substantial Completion.

1.9 DELIVERY, STORAGE, AND HANDLING

A. Deliver and store packaged materials in original containers with labels intact until time of use.

B. Store materials on elevated platforms, under cover, and in a dry location.

C. Store boards flat on pallets; do not store directly on ground or expose to moisture prior to installation

1.10 WARRANTY

A. Special Warranty: Manufacturer agrees to repair or replace products that fail in materials or workmanship within specified warranty period. Warranty shall cover manufacturer's standard finish system against peeling, flaking, and excessive fading in addition to substrate defects.

1. Failures include, but are not limited to, the following:

a. Structural failures including cracking and deforming.
b. Deterioration of materials beyond normal weathering.

2. Warranty Period: 10 years from date of Substantial Completion.

PART 2 - PRODUCTS

2.1 SOURCE LIMITATIONS

A. Obtain products, including related accessories, from single manufacturer to ensure color and texture consistency.

2.2 FIBER-CEMENT SIDING

A. Fiber-Cement Siding: ASTM C1186, Type A, Grade II, fiber-cement board, noncombustible when tested in accordance with ASTM E136; with a flame-spread index of 25 or less when tested in accordance with ASTM E84. Comply with ASTM E330 for structural performance under wind loads as required by state and local building codes.

1. Manufacturers: Subject to compliance with requirements, provide products by the following:

a. James Hardie
b. Allura
c. Nichiha
d. Approved Equal.

B. Labeling: Provide fiber-cement siding that is tested and labeled in accordance with ASTM C1186 by a qualified testing agency acceptable to authorities having jurisdiction.

C. Nominal Thickness: Not less than 5/16 inch.

D. Panel Texture: Smooth finish vertical siding.

E. Factory Priming: Manufacturer's standard acrylic primer. Field paint finish per Section 099600

using manufacturer-approved acrylic topcoat.

2.3 FIBER-CEMENT SOFFIT

A. Fiber-Cement Soffit: ASTM C1186, Type A, Grade II, fiber-cement board, noncombustible when tested in accordance with ASTM E136; with a flame-spread index of 25 or less when tested in accordance with ASTM E84.

1. Manufacturers: Subject to compliance with requirements, provide products by the following:

a. James Hardie
b. Allura
c. Nichiha
d. Approved equal.

B. Nominal Thickness: Not less than 5/16 inch.

C. Pattern: 4-inch wide boards.

D. Ventilation: Provide unperforated soffit.

E. Factory Priming: Manufacturer's standard acrylic primer.

2.4 ACCESSORIES

A. Siding Accessories, General: Provide starter strips, edge trim, outside and inside corner caps, and other items as recommended by siding manufacturer for building configuration.

1. Provide accessories matching color and texture of adjacent siding unless otherwise indicated.
2. Provide metal drip edge at bottom course of siding and above horizontal trim elements to deflect water.

B. Decorative Accessories: Provide the following fiber-cement decorative accessories as indicated:

1. Corner posts.
2. Door and window casings.
3. Fasciae.
4. Moldings and trim.

C. Flashing: Provide aluminum flashing complying with Section 076200 "Sheet Metal Flashing and Trim" at window and door heads and where indicated.

1. Finish for Aluminum Flashing: Factory-applied Kynar 500/Hylar 5000 high-performance organic finish, color as selected by Architect.

D. Fasteners:

1. For fastening to wood, use manufacturer-approved screws of sufficient length to penetrate a minimum of 1 inch into substrate.
2. For fastening to metal, use ribbed bugle-head screws of sufficient length to penetrate a minimum of 1/4 inch, or three screw-threads, into substrate.
3. For fastening fiber cement, use stainless steel fasteners.

4. Install fasteners at 16 in. o.c. maximum unless otherwise recommended by manufacturer for project wind load conditions.

PART 3 - EXECUTION

3.1 EXAMINATION

A. Examine substrates for compliance with requirements for installation tolerances and other conditions affecting performance of fiber-cement siding and soffit and related accessories.

B. Verify sheathing is sound, flat within 1/8 in. in 10 ft, and WRB is installed continuously with overlaps shingled downward.

C. Proceed with installation only after unsatisfactory conditions have been corrected.

3.2 PREPARATION

A. Clean substrates of projections and substances detrimental to application.

B. Ensure flashings, WRB laps, and penetration boots are complete prior to starting siding installation.

3.3 INSTALLATION

A. General: Comply with manufacturer's written installation instructions applicable to products and applications indicated unless more stringent requirements apply.

1. Do not install damaged components.
2. Maintain minimum 6 inches clearance above finished grade and 2 inches above horizontal surfaces such as roofs and flashing.
3. Install fasteners no more than 16 inches o.c.

B. Install joint sealants as specified in Section 079200 "Joint Sealants" and to produce a weathertight installation.
1. Stagger end joints on adjacent courses a minimum of 24 inches. Seal or flash all butt joints per manufacturer requirements

3.4 ADJUSTING AND CLEANING

A. Remove damaged, improperly installed, or otherwise defective materials and replace with new materials complying with specified requirements.

B. Clean finished surfaces according to manufacturer's written instructions and maintain in a clean condition during construction.

C. Touch up field paint as required and remove construction residue using non-abrasive cleaners approved by manufacturer.

END OF SECTION 074646

SECTION 075323 - EPDM MEMBRANE ROOFING

PART 1 - GENERAL

1.1 RELATED DOCUMENTS

A. Drawings and general provisions of the Contract, including General and Supplementary Conditions and Division 1.

1.2 SUMMARY

A. This Section includes the following:

1. Adhered membrane roofing system.
2. Roof insulation.

B. Related Sections include the following:
1. Division 7 Section 076200 "Edge Metal Flashing and Trim" for metal roof penetration flashings, flashings, and counter flashings.
2. Division 7 Section 079200 "Joint Sealants."

1.3 DEFINITIONS

A. Roofing Terminology: Refer to ASTM D 1079 and glossary of NRCA's "The NRCA Roofing and Waterproofing Manual" for definition of terms related to roofing work in this Section.

B. Design Uplift Pressure: The uplift pressure, calculated according to procedures in SPRI's "Wind Load Design Guide for Fully Adhered and Mechanically Fastened Roofing Systems," before multiplication by a safety factor.

C. Factored Design Uplift Pressure: The uplift pressure, calculated according to procedures in SPRI's "Wind Load Design Guide for Fully Adhered and Mechanically Fastened Roofing Systems," after multiplication by a safety factor.

1.4 PERFORMANCE REQUIREMENTS

A. General: Provide installed roofing membrane and base flashings that remain watertight; do not permit the passage of water; and resist specified uplift pressures, thermally induced movement, and exposure to weather without failure.

B. Material Compatibility: Provide roofing materials that are compatible with one another under conditions of service and application required, as demonstrated by roofing membrane manufacturer based on testing and field experience.

C. Roofing System Design: Provide a membrane roofing system that is identical to systems that have been successfully tested by a qualified testing and inspecting agency to resist uplift pressure calculated according to ASCE 7.

D. FMG Listing: Provide roofing membrane, base flashings, and component materials that comply with requirements in FMG 4450 and FMG 4470 as part of a membrane roofing system and that are listed in FMG's "Approval Guide" for Class 1 or noncombustible construction, as applicable. Identify materials with FMG markings.

1. Fire/Windstorm Classification: Class 1A.
2. Hail Resistance: SH.

1.5 SUBMITTALS

A. Product Data: For each type of product indicated.

B. Shop Drawings: For roofing system. Include plans, elevations, sections, details, and attachments to other Work.

1. Base flashings and membrane terminations.
2. Tapered insulation, including slopes.
3. Insulation fastening patterns.

C. Samples for Verification: For the following products:

1. 24-by-24-inch square of sheet roofing of color specified, including T-shaped side and end lap seam.
2. 12-by-12-inch square of roof insulation and roof cover board.
3. 12-by-12-inch square of walkway pads or rolls.
4. 12-inch length of metal termination bars.
5. Six insulation fasteners of each type, length, and finish.
6. Six roof cover fasteners of each type, length, and finish.

D. Installer Certificates: Signed by roofing system manufacturer certifying that Installer is approved, authorized, or licensed by manufacturer to install roofing system.

E. Manufacturer Certificates: Signed by roofing manufacturer certifying that roofing system complies with requirements specified in "Performance Requirements" Article.

1. Submit evidence of meeting performance requirements.

F. Qualification Data: For Installer and manufacturer.

G. Product Test Reports: Based on evaluation of comprehensive tests performed by manufacturer and witnessed by a qualified testing agency, for components of roofing system.

H. Research/Evaluation Reports: For components of membrane roofing system.

I. Maintenance Data: For roofing system to include in maintenance manuals.

J. Warranties: Special warranties specified in this Section.

K. Inspection Report: Copy of roofing system manufacturer's inspection report of completed roofing installation.

1.6 QUALITY ASSURANCE

A. Installer Qualifications: A qualified firm that is approved, authorized, or licensed by roofing system manufacturer to install manufacturer's product and that is eligible to receive manufacturer's warranty.

B. Manufacturer Qualifications: A qualified manufacturer that has UL listing and/or FMG approval for membrane roofing system identical to that used for this Project.

C. Testing Agency Qualifications: An independent testing agency with the experience and capability to conduct the testing indicated, as documented according to ASTM E 548.

D. Source Limitations: Obtain components for membrane roofing system from same manufacturer as roofing membrane.

E. Fire-Test-Response Characteristics: Provide membrane roofing materials with the fire-test-response characteristics indicated as determined by testing identical products per test method below by UL, FMG, or another testing and inspecting agency acceptable to authorities having jurisdiction. Materials shall be identified with appropriate markings of applicable testing and inspecting agency.

1. Exterior Fire-Test Exposure: Class A; ASTM E 108, for application and roof slopes indicated.
2. Fire-Resistance Ratings: ASTM E 119, for fire-resistance-rated roof assemblies of which roofing system is a part.

F. Preinstallation Conference: Conduct conference at Project site. Comply with requirements in Division 1. Review methods and procedures related to roofing system including, but not limited to, the following:

1. Meet with Owner; Architect; Owner's insurer if applicable; testing and inspecting agency representative; roofing Installer; roofing system manufacturer's representative; and installers whose work interfaces with or affects roofing, including installers of roof accessories and roof-mounted equipment.
2. Review methods and procedures related to roofing installation, including manufacturer's written instructions.
3. Review and finalize construction schedule and verify availability of materials, Installer's personnel, equipment, and facilities needed to make progress and avoid delays.
4. Examine deck substrate conditions and finishes for compliance with requirements, including flatness and fastening.
5. Review structural loading limitations of roof deck during and after roofing.
6. Review base flashings, special roofing details, roof drainage, roof penetrations, equipment curbs, and condition of other construction that will affect roofing system.
7. Review governing regulations and requirements for insurance and certificates if applicable.
8. Review temporary protection requirements for roofing system during and after installation.
9. Review roof observation and repair procedures after roofing installation.

1.7 DELIVERY, STORAGE, AND HANDLING

A. Deliver roofing materials to Project site in original containers with seals unbroken and labeled with manufacturer's name, product brand name and type, date of manufacture, and directions for storing and mixing with other components.

B. Store liquid materials in their original undamaged containers in a clean, dry, protected location and within the temperature range required by roofing system manufacturer. Protect stored liquid material from direct sunlight.

1. Discard and legally dispose of liquid material that cannot be applied within its stated shelf life.

C. Protect roof insulation materials from physical damage and from deterioration by sunlight, moisture, soiling, and other sources. Store in a dry location. Comply with insulation manufacturer's written instructions for handling, storing, and protecting during installation.

D. Handle and store roofing materials and place equipment in a manner to avoid permanent deflection of deck.

1.8 PROJECT CONDITIONS

A. Weather Limitations: Proceed with installation only when existing and forecasted weather conditions permit roofing system to be installed according to manufacturer's written instructions and warranty requirements.

1.9 WARRANTY

A. Special Warranty: Manufacturer's standard form, without monetary limitation, in which manufacturer agrees to repair or replace components of membrane roofing system that fail in materials or workmanship within specified warranty period. Failure includes roof leaks.
1. Special warranty includes all components of the manufacturer's fully warranted EPDM membrane roofing system, including vapor retarder, roof insulation, cover board, roofing membrane, membrane adhesives, flashing materials, base flashings, edge metal and termination accessories, fasteners, plates, walkway products, and other accessories required for a complete watertight installation.
2. Warranty Period: 25 years from date of Substantial Completion.

B. Special Project Warranty: Submit roofing Installer's warranty, on warranty form at end of this Section, signed by Installer, covering Work of this Section, including all components of membrane roofing system such as roofing membrane, base flashing, roof insulation, fasteners, cover boards, substrate boards, vapor retarders, roof pavers, and walkway products, for the following warranty period:

1. Warranty Period: Two (2) years from date of Substantial Completion.

PART 2 - PRODUCTS

2.1 MANUFACTURERS

A. In other Part 2 articles where subparagraph titles below introduce lists, the following requirements apply for product selection:

1. Available Products: Subject to compliance with requirements, products that may be incorporated into the Work include, but are not limited to, the products specified.
2. Available Manufacturers: Subject to compliance with requirements, manufacturers offering products that may be incorporated into the Work include but are not limited to, the manufacturers specified.

2.2 EPDM ROOFING MEMBRANE

A. EPDM Roofing Membrane: ASTM D 4637, Type I, nonreinforced, scrim or fabric internally reinforced uniform, flexible sheet made from EPDM, and as follows:

1. Available Manufacturers:
   a. Elevate Commercial Roofing Systems; RubberGard EPDM Adhered Membrane Steel Deck Red Shield Warranty system.
   b. Carlisle SynTec Incorporated.
   c. Tremco.
   d. Johns Manville International, Inc.
   e. Or Approved Equal.
2. Thickness: 60 mils minimum.
3. Exposed Face Color: Black.

2.3 AUXILIARY MATERIALS

A. General: Auxiliary materials recommended by roofing system manufacturer for intended use and compatible with membrane roofing.

1. Liquid-type auxiliary materials shall meet VOC limits of authorities having jurisdiction.

B. Sheet Flashing: 60-mil- thick EPDM, partially cured or cured, according to application.

C. Bonding Adhesive: Manufacturer's standard bonding adhesive.

A. Bonding Adhesive: Manufacturer's standard membrane adhesive compatible with EPDM membrane and substrate and approved for inclusion in the specified 25-year warranted adhered membrane roofing system. Basis of design: Elevate Jet Bond Spray Adhesive, Single-Ply LVOC Bonding Adhesive, Single-Ply LVOC Bonding Adhesive-1168, EPDM Bonding Adhesive BA-2004(T), or other Elevate adhesive approved by manufacturer for the warranted assembly.

B. Seaming Material: Manufacturer's standard synthetic-rubber polymer primer and 3-inch- wide minimum, butyl splice tape with release film.

C. Lap Sealant: Manufacturer's standard single-component sealant, color to match roofing membrane.

D. Water Cutoff Mastic: Manufacturer's standard butyl mastic sealant.

E. Metal Termination Bars: Manufacturer's standard predrilled stainless-steel or aluminum bars, approximately 1 by 1/8 inch thick; with anchors.

F. Metal Battens: Manufacturer's standard aluminum-zinc-alloy-coated or zinc-coated steel sheet, approximately 1 inch wide by 0.05 inch thick, prepunched.

G. Fasteners: Factory-coated steel fasteners and metal or plastic plates meeting corrosion-resistance provisions in FMG 4470, designed for fastening membrane to substrate, and acceptable to membrane roofing system manufacturer.

H. Miscellaneous Accessories: Provide manufacturer's accessory products required for a complete 25-year warranted EPDM roofing system, including QuickSeam splice tape, primers, joint covers, T-joint covers, pourable sealers, preformed cone and vent flashings, inside and outside corner flashings, in-seam sealants, termination bars, drain bars, cover strips, water cutoff mastic, lap sealant, fasteners, plates, and other accessories required by roofing system manufacturer.

2.4 SUBSTRATE BOARDS

A. Substrate Board: Where substrate board is required by the roof assembly, provide substrate board acceptable to roofing membrane manufacturer and included in the tested and warranted roofing assembly.

B. Fasteners: Factory-coated steel fasteners and metal or plastic plates meeting corrosion-resistance provisions in FMG 4470, designed for fastening substrate board to roof deck.

2.5 COVER BOARD

A. Glass-Mat Gypsum Cover Board: ASTM C1177/C1177M glass-mat gypsum roof board acceptable to roofing membrane manufacturer and included in the tested and warranted roofing assembly. Basis of design: 1/2-inch SECUROCK UltraLight Coated Glass-Mat Roof Board, 1/2-inch DensDeck Prime Roof Board, or other gypsum cover board approved by roofing system manufacturer for the specified 25-year warranty.
   1. Thickness: 1/2 inch.
   2. R-value: 2.5.
   3. Cover board shall be compatible with EPDM roofing membrane, adhesives, insulation, substrate, and other roofing system components, and shall be acceptable to roofing membrane manufacturer for inclusion in specified 25-year roofing system warranty.

1. VAPOR RETARDER

A. Vapor Retarder: Manufacturer's self-adhered vapor retarder or vapor barrier system acceptable to roofing membrane manufacturer and approved for the specified 25-year warranted assembly. Basis of design: Elevate V-Force Vapor Barrier Membrane with thermal barrier where required by code, FM-insured requirements, or roofing system manufacturer.

2.6 ROOF INSULATION

A. General: Provide preformed roof insulation boards that comply with requirements and referenced standards, selected from manufacturer's standard sizes and of thicknesses indicated.

B. Polyisocyanurate Board Insulation: ASTM C1289, Type II, glass-fiber mat facer on both major surfaces; provide Elevate ISOGARD GL, ISO 95+ GL, or other polyisocyanurate insulation approved by roofing system manufacturer for the specified 25-year warranted EPDM assembly.

1. Available Manufacturers:

a. AlliedSignal Inc.; Commercial Roofing Systems.
b. Apache Products Company.
c. Atlas Roofing Corporation.
d. Carlisle SynTec Incorporated.
e. Celotex Corporation.
f. GAF Materials Corp.
g. GenFlex Roofing Systems.
h. Hunter Panels, LLC.
i. Johns Manville International, Inc.
j. Or equal.

C. Tapered Insulation: Provide factory-tapered insulation boards fabricated to slope of 1/4 inch per 12 inches, unless otherwise indicated.

D. Provide preformed saddles, crickets, tapered edge strips, and other insulation shapes where indicated for sloping to drain. Fabricate to slopes indicated.

2.7 INSULATION ACCESSORIES

A. General: Furnish roof insulation accessories recommended by insulation manufacturer for intended use and compatible with membrane roofing.

B. Fasteners: Factory-coated steel fasteners and metal or plastic plates meeting corrosion-resistance provisions in FMG 4470, designed for fastening roof insulation to substrate, and acceptable to roofing system manufacturer.

C. Insulation Adhesive: Manufacturer's insulation adhesive approved for polyisocyanurate insulation and cover board attachment in the specified 25-year warranted EPDM assembly. Basis of design: Elevate I.S.O. Twin Pack, I.S.O. Spray R, I.S.O. Stick, Twin Jet, Twin Jet Y, or other manufacturer-approved adhesive; use board sizes, bead spacing, and attachment rates required by manufacturer for warranty and wind-uplift requirements.

D. Protection Mat: Woven or nonwoven polypropylene, polyolefin, or polyester fabric mat, water permeable and resistant to ultraviolet degradation, type and weight as recommended by roofing system manufacturer for application.

E. Metal Securement System: Perimeter securement flashing and strapping fabricated from stainless steel, a minimum of 0.031 inch thick. Provide fasteners as recommended by insulation manufacturer.

2.8 WALKWAYS

A. Flexible Walkways: Factory-formed, nonporous, heavy-duty, solid-rubber, slip-resisting, surface-textured roof walking pads, 30 by 30 inches minimum, approximately 3/16 inch thick, and compatible with and acceptable to membrane roofing system manufacturer for installation over specified EPDM roofing system.

PART 3 - EXECUTION

3.1 EXAMINATION

A. Examine substrates, areas, and conditions, with Installer present, for compliance with the following requirements and other conditions affecting performance of roofing system:

1. Verify that roof openings and penetrations are in place and set and braced and that roof drains are securely clamped in place.
2. Verify that wood blocking, curbs, and nailers are securely anchored to roof deck at penetrations and terminations and that nailers match thicknesses of insulation.
3. Verify that concrete substrate is visibly dry and free of moisture. Test for capillary moisture by plastic sheet method according to ASTM D 4263.
4. Proceed with installation only after unsatisfactory conditions have been corrected.
5. Steel Decks:
   a. Verify that surface plane flatness and fastening of steel roof deck complies with requirements in Division 05 Section "Steel Decking."

3.2 PREPARATION

A. Clean substrate of dust, debris, moisture, and other substances detrimental to roofing installation according to roofing system manufacturer's written instructions. Remove sharp projections.

B. Prevent materials from entering and clogging roof drains and conductors and from spilling or migrating onto surfaces of other construction. Remove roof-drain plugs when no work is taking place or when rain is forecast.

C. Complete terminations and base flashings and provide temporary seals to prevent water from entering completed sections of roofing system at the end of the workday or when rain is forecast. Remove and discard temporary seals before beginning work on adjoining roofing.

3.3 SUBSTRATE BOARD INSTALLATION (IF REQUIRED)

A. Install substrate board with long joints in continuous straight lines, perpendicular to roof slopes with end joints staggered between rows. Tightly butt substrate boards together.
   1. Fasten substrate board to top flanges of steel deck to resist uplift pressure at corners, perimeter, and field of roof per roofing system manufacturer's written instructions.

3.4 INSULATION INSTALLATION

A. Coordinate installing membrane roofing system components, so insulation is not exposed to precipitation or left exposed at the end of the workday.

B. Comply with membrane roofing system manufacturer's written instructions for installing roof insulation.

C. Install tapered insulation under area of roofing to conform to slopes indicated.

D. Install one or more layers of insulation under area of roofing to achieve the required thickness. Where overall insulation thickness is 2 inches or greater, install 2 or more layers with joints of each succeeding layer staggered from joints of previous layer a minimum of 6 inches in each direction.

E. Trim surface of insulation where necessary at roof drains so completed surface is flush and does not restrict flow of water.

F. Install insulation with long joints of insulation in a continuous straight line with end joints staggered between rows, abutting edges and ends between boards. Fill gaps exceeding 1/4 inch with insulation.

   1. Cut and fit insulation within 1/4 inch of nailers, projections, and penetrations.

G. For Substrate Board, Adhered Insulation: Install each layer of insulation and adhere to substrate as follows:

   1. Set each layer of insulation in a cold fluid-applied adhesive.

H. Without Substrate Board, Mechanically Fastened with Subsequent Layers Adhered Insulation: Secure first layer of insulation to deck using mechanical fasteners designed and sized for fastening specified board-type to deck type.
   1. Fasten first layer to resist uplift pressure at corners, perimeter, and field of roof.
   2. Install subsequent layers in a two-part urethane adhesive according to roofing system manufacturer’s instruction.
   3. Install each layer to resist uplift pressure at corners, perimeter, and field of roof.

3.5 COVER BOARD INSTALLATION

A. Coordinate installing membrane roofing system components so cover board is not exposed to precipitation or left exposed at the end of the workday.

B. Comply with membrane roofing system manufacturer’s written instructions for installing high-density polyisocyanurate cover board.

C. Install cover board with long joints in a continuous straight line. Joints should be staggered between rows, abutting edges and ends per manufacturer’s written instructions. Fill gaps exceeding 1/4 inch (6 mm) with cover board.
   1. Cut and fit cover board within 1/4 inch (6 mm) of nailers, projections, and penetrations.

D. Trim surface of cover board where necessary at roof drains so completed surface is flush and does not restrict flow of water.

1. Install tapered edge strips at perimeter edges of roof that do not terminate at vertical surfaces.

E. Adhered Cover Board: Adhere cover board to substrate as follows:
1. Install in a two-part urethane adhesive according to roofing system manufacturer's instruction.
2. Install to resist uplift pressure at corners, perimeter, and field of roof.

3.6 ADHERED ROOFING MEMBRANE INSTALLATION

A. Install roofing membrane over area to receive roofing according to membrane roofing system manufacturer's written instructions. Unroll roofing membrane and allow to relax before installing.

B. Start installation of roofing membrane in presence of membrane roofing system manufacturer's technical personnel.

C. Accurately align roofing membrane and maintain uniform side and end laps of minimum dimensions required by manufacturer. Stagger end laps.

D. Bonding Adhesive: Apply bonding adhesive to substrate and underside of roofing membrane at rate required by manufacturer and allow to partially dry before installing roofing membrane. Do not apply bonding adhesive to splice area of roofing membrane.

E. Cold Fluid-Applied Adhesive: Apply cold fluid-applied adhesive to substrate at rate required by manufacturer and install fleece-backed roofing membrane.

F. Mechanically and/or adhesively fasten roofing membrane securely at terminations, penetrations, and perimeter of roofing as indicated on drawings.

G. Apply roofing membrane with side laps shingled with slope of roof deck where possible.

H. Tape Seam Installation: Clean and prime both faces of splice areas, apply splice tape, and firmly roll side and end laps of overlapping roofing membranes according to manufacturer's written instructions to ensure a watertight seam installation. Apply lap sealant and seal exposed edges of roofing membrane terminations.

I. Repair tears, voids, and lapped seams in roofing that does not meet requirements.

J. Spread sealant or mastic bed over deck drain flange at deck drains and securely seal roofing membrane in place with clamping ring.

K. Install roofing membrane and auxiliary materials to tie into existing roofing.

3.7 BASE FLASHING INSTALLATION

A. Install sheet flashings and preformed flashing accessories and adhere to substrates according to membrane roofing system manufacturer's written instructions.

B. Apply bonding adhesive to substrate and underside of sheet flashing at required rate and allow to partially dry. Do not apply bonding adhesive to seam area of flashing.

C. Flash penetrations and field-formed inside and outside corners with cured or uncured sheet flashing.

D. Clean-splice areas, apply splicing cement, and firmly roll side and end laps of overlapping sheets to ensure a watertight seam installation. Apply lap sealant and seal exposed edges of sheet flashing terminations.

E. Terminate and seal top of sheet flashings.

3.8 WALKWAY INSTALLATION

A. Flexible Walkways: Install 30-by-30-inch roof walking pads in locations indicated and at access points, service routes, and around rooftop equipment as required. Adhere or secure walkway pads with materials compatible with the EPDM roofing membrane and according to membrane roofing system manufacturer's written instructions and warranty requirements.

3.9 FIELD QUALITY CONTROL

A. Final Roof Inspection: Arrange for roofing system manufacturer's technical personnel to inspect roofing installation on completion and submit report to Architect.

1. Notify Architect and Owner 48 hours in advance of date and time of inspection.

B. Repair or remove and replace components of membrane roofing system where test results or inspections indicate that they do not comply with specified requirements.

C. Additional testing and inspecting, at Contractor's expense, will be performed to determine compliance of replaced or additional work with specified requirements.

3.10 PROTECTING AND CLEANING

A. Protect membrane roofing system from damage and wear during remainder of construction period. When remaining construction will not affect or endanger roofing, inspect roofing for deterioration and damage, describing its nature and extent in a written report, with copies to Architect and Owner.

B. Correct deficiencies in or remove membrane roofing system that does not comply with requirements, repair substrates and repair or reinstall membrane roofing system to a condition free of damage and deterioration at time of Substantial Completion and according to warranty requirements.

C. Clean overspray and spillage from adjacent construction using cleaning agents and procedures recommended by manufacturer of affected construction.

END OF SECTION 075323

SECTION 076200 - SHEET METAL FLASHING AND TRIM

PART 1 - GENERAL

1.1 SUMMARY

A. Section Includes: Custom flashing and trim fabrications, made from the following:

1. Sheet metal materials.
2. Underlayment.
3. Miscellaneous materials.

B. Related Documents:

1. Drawings and general provisions of the Contract, including General and Supplementary Conditions and Division 01 Specification Sections, apply to this Section.
2. Related Requirements:

a. Section 061000 "Rough Carpentry" for wood nailers, curbs, and blocking.
b. Section 072100 "Thermal Insulation" for insulation associated with sheet metal assemblies.
c. Section 072726 "Air Barriers" for continuity of air barrier at flashing interfaces.
d. Section 075216 "Modified Bituminous Membrane Roofing" for roofing system interfaces and edge conditions.
e. Section 076100 "Metal Roof Panels" and Section 074216 "Metal Wall Panel Rainscreen System" for coordination of sheet metal flashings with panel systems.
f. Section 077100 "Roof Specialties" for manufactured edge metal and copings.
g. Section 077200 "Roof Accessories" for set-on-type curbs, equipment supports, roof hatches, vents, and other manufactured roof accessory units.
h. Section 079200 "Joint Sealants" for joint sealant requirements.

1.2 ACTION SUBMITTALS

A. Product Data: For each type of product.

B. Shop Drawings: For sheet metal flashing and trim.

1. Plans, elevations, sections, and attachment details.
2. Fabrication and installation layouts, expansion-joint locations, and keyed details. Distinguish between shop- and field-assembled Work.
3. Identification of material, thickness, weight, and finish for each item and location in Project.
4. Details for forming, including profiles, shapes, seams, and dimensions.
5. Details for joining, supporting, and securing, including layout and spacing of fasteners, cleats, clips, and other attachments. Include pattern of seams.
6. Details of termination points and assemblies.
7. Details of expansion joints and expansion-joint covers, including showing direction of expansion and contraction from fixed points.
8. Details of roof-penetration flashing.
9. Details of edge conditions, including eaves, ridges, valleys, rakes, crickets, flashings, and counterflashings.

10. Details of special conditions.
11. Details of connections to adjoining work.
12. Formed flashing and trim at scale of not less than 1-1/2 inches per 12 inches.

PART 2 - PRODUCTS

2.1 PERFORMANCE REQUIREMENTS

A. Sheet metal flashing and trim assemblies, including cleats, anchors, and fasteners, are to withstand wind loads, structural movement, thermally induced movement, and exposure to weather without failure due to defective manufacture, fabrication, installation, or other defects in construction. Completed sheet metal flashing and trim are not to rattle, leak, or loosen, and are to remain watertight.

B. Sheet Metal Standard for Flashing and Trim: Comply with SMACNA's "Architectural Sheet Metal Manual" requirements for dimensions and profiles shown unless more stringent requirements are indicated.

C. Thermal Movements: Allow for thermal movements from ambient and surface temperature changes.

1. Temperature Change: 120 deg F, ambient; 180 deg F, material surfaces.

2.2 SHEET METAL MATERIALS

A. Protect mechanical and other finishes on exposed surfaces from damage by applying strippable, temporary protective film before shipping.

B. Metallic-Coated Steel Sheet: Zinc-coated (galvanized) steel sheet complying with minimum ASTM A653/A653M, G90 coating designation, or aluminum-zinc alloy-coated steel sheet complying with minimum ASTM A792/A792M, Class AZ50 coating designation; structural quality. Prepainted by the coil-coating process to comply with ASTM A755/A755M.

1. Nominal Thickness: 0.052 inch.
2. Surface: Smooth, flat.
3. Exposed Coil-Coated Finish:

a. Two-Coat Fluoropolymer: Fluoropolymer finish containing not less than 70 percent PVDF resin by weight in color coat. Prepare, pretreat, and apply coating to exposed metal surfaces to comply with coating and resin manufacturers' written instructions.

4. Color: Match existing.

C. Aluminum Sheet: Coil-coated sheet, ASTM B209/B209M, alloy as standard with manufacturer, with temper as required to suit forming operations and structural performance required.

1. Thickness: 0.063 inch.
2. Surface: Smooth, flat.
3. Exposed Coil-Coated Finish:

a. Two-Coat Fluoropolymer: AAMA 2605. Fluoropolymer finish containing not less

than 70 percent PVDF resin by weight in color coat. Prepare, pretreat, and apply coating to exposed metal surfaces to comply with coating and resin manufacturers' written instructions.

4. Color: to match existing.

D. Stainless Steel Sheet: ASTM A240/A240M, Type 304, dead soft, fully annealed.

1. Nominal Thickness: 0.0313 inch.
2. Surface: Smooth, flat.
3. Exterior Finish: ASTM A480/A480M, No. 2B (bright, cold rolled).

a. Surface Preparation: Remove tool and die marks and stretch lines, or blend into finish.
b. Polished Finishes: Grind and polish surfaces to produce uniform finish, free of cross scratches.

1) When polishing is completed, passivate and rinse surfaces. Remove embedded foreign matter and leave surfaces chemically clean.

2.3 MISCELLANEOUS MATERIALS

A. Provide materials and types of fasteners, protective coatings, sealants, and other miscellaneous items as required for complete sheet metal flashing and trim installation and as recommended by manufacturer of primary sheet metal or manufactured item unless otherwise indicated.

B. Fasteners: Wood screws, annular threaded nails, self-tapping screws, self-locking rivets and bolts, and other suitable fasteners designed to withstand design loads and recommended by manufacturer of primary sheet metal or manufactured item.

1. General: Blind fasteners or self-drilling screws, gasketed, with hex-washer head.

a. Exposed Fasteners: Heads matching color of sheet metal using plastic caps or factory-applied coating. Provide metal-backed EPDM or PVC sealing washers under heads of exposed fasteners bearing on weather side of metal.
b. Blind Fasteners: High-strength aluminum or stainless steel rivets suitable for metal being fastened.
c. Spikes and Ferrules: Same material as gutter; with spike with ferrule matching internal gutter width.

2. Fasteners for Zinc-Coated (Galvanized) or Aluminum-Zinc Alloy-Coated Steel Sheet: Series 300 stainless steel or hot-dip galvanized steel in accordance with ASTM A153/A153M or ASTM F2329/F2329M.
3. Fasteners for Aluminum Sheet: Aluminum or Series 300 stainless steel.
4. Fasteners for Stainless Steel Sheet: Series 300 stainless steel.
5. Fasteners for Copper, Zinc-Tin Alloy-Coated Copper, or Copper-Clad Stainless Steel Sheet: Copper, hardware bronze or passivated Series 300 stainless steel.
6. Fasteners for Zinc Sheet: Series 300 stainless steel or hot-dip galvanized steel in accordance with ASTM A153/A153M or ASTM F2329/F2329M.

C. Sealant Tape: Pressure-sensitive, 100 percent solids, polyisobutylene compound sealant tape with release-paper backing. Provide permanently elastic, nonsag, nontoxic, nonstaining tape 1/2 inch wide and 1/8 inch thick.

D. Elastomeric Sealant: ASTM C920, elastomeric silicone polymer sealant; of type, grade, class, and use classifications required to seal joints in sheet metal flashing and trim and remain watertight.

E. Butyl Sealant: ASTM C1311, single-component, solvent-release butyl rubber sealant; polyisobutylene plasticized; heavy bodied for hooked-type expansion joints with limited movement.

F. Bituminous Coating: Cold-applied asphalt emulsion in accordance with ASTM D1187/D1187M.

G. Asphalt Roofing Cement: ASTM D4586/D4586M, asbestos free, of consistency required for application.

2.4 UNDERLAYMENT

A. Underlayment Sheet: One of the following:

1. ASTM D226/D226M, Type II (No. 30) asphalt-saturated organic felt.
2. Synthetic roofing underlayment specifically intended for use beneath sheet metal flashings, compatible with adjacent roofing materials, and recommended by roofing manufacturer.

B. Slip Sheet: Rosin-sized building paper or uncreped, asphalt-saturated felt as recommended by sheet metal and roofing manufacturers to prevent adhesion between metal and substrate.

2.5 FABRICATION, GENERAL

A. Custom fabricate sheet metal flashing and trim to comply with details indicated and recommendations in cited sheet metal standard that apply to design, dimensions, geometry, metal thickness, and other characteristics of item required.

1. Fabricate sheet metal flashing and trim in shop to greatest extent possible.
2. Fabricate sheet metal flashing and trim in thickness or weight needed to comply with performance requirements, but not less than that specified for each application and metal.
3. Verify shapes and dimensions of surfaces to be covered and obtain field measurements for accurate fit before shop fabrication.
4. Form sheet metal flashing and trim to fit substrates without excessive oil-canning, buckling, and tool marks; true to line, levels, and slopes; and with exposed edges folded back to form hems.
5. Conceal fasteners and expansion provisions where possible. Do not use exposed fasteners on faces exposed to view.

B. Fabrication Tolerances:

1. Fabricate sheet metal flashing and trim that is capable of installation to a tolerance of 1/4 inch in 20 ft. on slope and location lines indicated on Drawings and within 1/8-inch offset of adjoining faces and of alignment of matching profiles.
2. Fabricate sheet metal flashing and trim that is capable of installation to tolerances specified.

C. Expansion Provisions: Form metal for thermal expansion of exposed flashing and trim.

1. Form expansion joints of intermeshing hooked flanges, not less than 1 inch deep, filled with butyl sealant concealed within joints.
2. Use lapped expansion joints only where indicated on Drawings.

D. Sealant Joints: Where movable, nonexpansion-type joints are required, form metal in accordance with cited sheet metal standard to provide for proper installation of elastomeric sealant.

E. Fabricate cleats and attachment devices from same material as accessory being anchored or from compatible, noncorrosive metal.

F. Seams:

1. Fabricate nonmoving seams with flat-lock seams. Form seams and seal with elastomeric sealant unless otherwise recommended by sealant manufacturer for intended use. Rivet joints where necessary for strength.

G. Do not use graphite pencils to mark metal surfaces.

2.6 WALL SHEET METAL FABRICATIONS

A. Through-Wall Flashing: Fabricate continuous flashings in minimum 96-inch- long, but not exceeding 12 ft. long, sections, under copings, and at shelf angles. Fabricate discontinuous lintel, sill, and similar flashings to extend 6 inches beyond each side of wall openings; and form with 2-inch- high, end dams. Fabricate from the following materials:

1. Stainless Steel: 0.0156 inch thick.

2.7 MISCELLANEOUS SHEET METAL FABRICATIONS

A. Equipment Support Flashing: Fabricate from the following materials:

1. Galvanized Steel: 0.028 inch thick.
2. Stainless Steel: 0.0188 inch thick.

PART 3 - EXECUTION

3.1 EXAMINATION

A. Examine substrates, areas, and conditions, with Installer present, for compliance with requirements for installation tolerances, substrates, and other conditions affecting performance of the Work.

1. Verify compliance with requirements for installation tolerances of substrates.
2. Verify that substrate is sound, dry, smooth, clean, sloped for drainage, and securely anchored.

3.2 INSTALLATION OF SHEET METAL FLASHING AND TRIM, GENERAL

A. Install sheet metal flashing and trim to comply with details indicated and recommendations of cited sheet metal standard that apply to installation characteristics required unless otherwise indicated on Drawings.

1. Install fasteners protective coatings, separators, sealants, and other miscellaneous items as required to complete sheet metal flashing and trim system.
2. Install sheet metal flashing and trim true to line, levels, and slopes. Provide uniform, neat seams with minimum exposure of sealant.
3. Anchor sheet metal flashing and trim and other components of the Work securely in place, with provisions for thermal and structural movement.
4. Install sheet metal flashing and trim to fit substrates and to result in watertight performance.
5. Install exposed sheet metal flashing and trim with limited oil-canning, and free of buckling and tool marks.
6. Do not field cut sheet metal flashing and trim by torch.
7. Do not use graphite pencils to mark metal surfaces.

B. Metal Protection: Where dissimilar metals contact each other, or where metal contacts pressure-treated wood or other corrosive substrates, protect against galvanic action or corrosion by painting contact surfaces with bituminous coating or by other permanent separation as recommended by sheet metal manufacturer or cited sheet metal standard.

1. Coat concealed side of uncoated-aluminum and stainless steel sheet metal flashing and trim with bituminous coating where flashing and trim contact wood, ferrous metal, or cementitious construction.
2. Underlayment: Where installing sheet metal flashing and trim directly on cementitious or wood substrates, install underlayment and cover with slip sheet.

C. Expansion Provisions: Provide for thermal expansion of exposed flashing and trim.

1. Space movement joints at maximum of 10 ft. with no joints within 24 inches of corner or intersection.
2. Form expansion joints of intermeshing hooked flanges, not less than 1 inch deep, filled with sealant concealed within joints.
3. Use lapped expansion joints only where indicated on Drawings.

D. Fasteners: Use fastener sizes that penetrate wood blocking or sheathing not less than 1-1/4 inches for nails and not less than 3/4 inch for wood screws.

E. Conceal fasteners and expansion provisions where possible in exposed work and locate to minimize possibility of leakage. Cover and seal fasteners and anchors as required for a tight installation.

F. Seal joints as required for watertight construction.

1. Use sealant-filled joints unless otherwise indicated.

a. Embed hooked flanges of joint members not less than 1 inch into sealant.
b. Form joints to completely conceal sealant.
c. When ambient temperature at time of installation is between 40 and 70 deg F, set joint members for 50 percent movement each way.
d. Adjust setting proportionately for installation at higher ambient temperatures.

1) Do not install sealant-type joints at temperatures below 40 deg F.

2. Prepare joints and apply sealants to comply with requirements in Section 079200 "Joint Sealants."

3.3 INSTALLATION OF WALL SHEET METAL FABRICATIONS

A. Install sheet metal wall flashing to intercept and exclude penetrating moisture in accordance with cited sheet metal standard unless otherwise indicated. Coordinate installation of wall flashing with installation of wall-opening components such as windows, doors, and louvers.

3.4 INSTALLATION OF MISCELLANEOUS SHEET METAL FABRICATIONS

A. Equipment Support Flashing:

1. Coordinate installation of equipment support flashing with installation of roofing and equipment.
2. Weld or seal flashing with elastomeric sealant to equipment support member.

3.5 CLEANING

A. Clean and neutralize flux materials. Clean off excess solder.

B. Clean off excess sealants.

3.6 PROTECTION

A. Remove temporary protective coverings and strippable films as sheet metal flashing and trim are installed unless otherwise indicated in manufacturer's written installation instructions.

B. On completion of sheet metal flashing and trim installation, remove unused materials and clean finished surfaces as recommended in writing by sheet metal flashing and trim manufacturer.

C. Maintain sheet metal flashing and trim in clean condition during construction.

D. Replace sheet metal flashing and trim that have been damaged or that have deteriorated beyond successful repair by finish touchup or similar minor repair procedures, as determined by Architect.

END OF SECTION 076200

SECTION 077100 - ROOF SPECIALTIES

PART 1 - GENERAL

1.1 RELATED DOCUMENTS

A. Drawings and general provisions of the Contract, including General and Supplementary Conditions and Division 01 Specification Sections, apply to this Section.

1.2 SUMMARY

A. Section Includes:

1. Reglets and counterflashings.
2. Self-healing, -temperature polymer-modified underlayment sheet at copings and other roof-edge conditions.
3. Painted aluminum gutters and downspouts.

B. Related Requirements:

1. Section 061000 " Rough Carpentry"
2. Section 076200 "Sheet Metal Flashing and Trim" for custom- and site-fabricated sheet metal flashing and trim.
3. Section 077200 "Roof Accessories" for set-on-type curbs, equipment supports, roof hatches, vents, and other manufactured roof accessory units.
4. Section 079200 "Joint Sealants" for field-applied sealants between roof specialties and adjacent materials.

C. Coordinate installation of roof specialties with sequencing of roof membrane, parapet blocking, and metal edge systems to maintain continuous weather protection.

D. Coordinate gutters and downspouts with applicable Civil Drawings and sections for connections to cast iron boots and underground stormwater-management systems.

1.3 ACTION SUBMITTALS

A. Product Data: For each type of product.

1. Include construction details, material descriptions, dimensions of individual components and profiles, and finishes.

B. Shop Drawings: For roof specialties.

1. Include plans, elevations, expansion-joint locations, keyed details, and attachments to other work. Distinguish between plant- and field-assembled work.
2. Include details for expansion and contraction; locations of expansion joints, including direction of expansion and contraction.

3. Indicate profile and pattern of seams and layout of fasteners, cleats, clips, and other attachments.
4. Detail termination points and assemblies, including fixed points.
5. Include details of special conditions.

C. Samples for Initial Selection: For each type of roof specialty indicated with factory-applied color finishes.

D. Samples for Verification:

1. Include Samples of each type of roof specialty to verify finish and color selection, in manufacturer's standard sizes.
2. Include reglets and counterflashings made from 12-inch lengths of full-size components in specified material, and including fasteners, cover joints, accessories, and attachments.

E. Color Charts: Provide manufacturer’s full range of standard fluoropolymer colors for selection.

1.4 INFORMATIONAL SUBMITTALS

A. Qualification Data: For Manufacturer.

B. Product Certificates: For each type of roof specialty.

C. Product Test Reports: For copings for tests performed by a qualified testing agency.

D. Sample Warranty: For manufacturer's special warranty.

1.5 QUALITY ASSURANCE

A. Manufacturer Qualifications: Company regularly engaged in fabrication of roof-edge and reglet systems tested to ANSI/SPRI ES-1 and having a minimum of five (5) years documented experience producing similar work.

B. Source Limitations: Obtain roof specialties approved by manufacturer providing roofing-system warranty specified in Section 075216 - Styrene Butadiene Styrene (SBS) Modified Bituminous Membrane Roofing.

C. Coordination with Roofing Manufacturer: Roof specialties shall be approved by the roof membrane manufacturer for inclusion within its total roof system warranty.

1.6 DELIVERY, STORAGE, AND HANDLING

A. Do not store roof specialties in contact with other materials that might cause staining, denting, or other surface damage. Store roof specialties away from uncured concrete and masonry.

B. Protect strippable protective covering on roof specialties from exposure to sunlight and high humidity, except to extent necessary for the period of roof-specialty installation.

1.7 FIELD CONDITIONS

A. Field Measurements: Verify profiles and tolerances of roof-specialty substrates by field measurements before fabrication and indicate measurements on Shop Drawings.

B. Coordination: Coordinate roof specialties with flashing, trim, and construction of parapets, roof deck, roof and wall panels, and other adjoining work to provide a leakproof, secure, and noncorrosive installation.

1.8 WARRANTY

A. Roofing-System Warranty: Roof specialties shall be included within the 30-year system warranty provided under Section 075216 “Modified Bituminous Membrane Roofing.”

B. Special Warranty on Painted Finishes: Manufacturer agrees to repair finish or replace roof specialties that show evidence of deterioration of factory-applied finishes within specified warranty period.

1. Fluoropolymer Finish: Deterioration includes, but is not limited to, the following:
   a. Color fading more than 5 Delta E units when tested according to ASTM D2244.
   b. Chalking in excess of a No. 8 rating when tested according to ASTM D4214.
   c. Cracking, checking, peeling, or failure of paint to adhere to bare metal.
2. Finish Warranty Period: Twenty (20) years from date of Substantial Completion.

PART 2 - PRODUCTS

2.1 PERFORMANCE REQUIREMENTS

A. General Performance: Roof specialties shall withstand exposure to weather and resist thermally induced movement without failure, rattling, leaking, or fastener disengagement due to defective manufacture, fabrication, installation, or other defects in construction.

B. ANSI/SPRI ES-1 Compliance: Roof-edge and coping systems shall be tested in accordance with ANSI/SPRI ES-1 and rated to meet or exceed design pressures established in Section 075216.

C. Thermal Movements: Allow for thermal movements from ambient and surface temperature changes to prevent buckling, opening of joints, hole elongation, overstressing of components, failure of joint sealants, failure of connections, and other detrimental effects. Provide clips that resist rotation and avoid shear stress as a result of thermal movements. Base calculations on surface temperatures of materials due to both solar heat gain and nighttime-sky heat loss.

1. Temperature Change (Range): 120 deg F, ambient; 180 deg F, material surfaces.

2.2 REGLETS AND COUNTERFLASHINGS

A. Reglets: Manufactured units formed to provide secure interlocking of separate reglet and counterflashing pieces, from the following exposed metal:

1. Stainless Steel: 0.020 inch (0.5 mm) thick minimum.

2. Corners: Factory mitered and continuously welded.
3. Surface-Mounted Type: Provide reglets with slotted holes for fastening to substrate, with neoprene or other suitable weatherproofing washers, and with channel for sealant at top edge.

B. Counterflashings: Manufactured units of heights to overlap top edges of base flashings by 4 inches and in lengths not exceeding 12 feet designed to snap into reglets or through-wall-flashing receiver and compress against base flashings with joints lapped, from the following exposed metal:

1. Stainless Steel: 0.020 inch thick minimum.

C. Accessories:

1. Counterflashing Wind-Restraint Clips: Provide clips to be installed before counterflashing to prevent wind uplift of counterflashing lower edge.

D. Exposed Metal Finish: Match adjacent sheet metal flashing finish for color and sheen unless otherwise indicated.

E. Painted Aluminum Gutters and Downspouts: Fabricate gutters and downspouts from aluminum sheet with factory-applied PVDF fluoropolymer coating, Kynar 500 or similar, on exposed surfaces. Provide box gutter configuration for gutters and square configuration for downspouts unless otherwise indicated. Sizes, locations, and profiles shall be as indicated on Drawings.

2.3 MATERIALS

A. Zinc-Coated (Galvanized) Steel Sheet: ASTM A653/A653M, G90 coating designation.

B. Aluminum Sheet: ASTM B209, alloy as standard with manufacturer for finish required, with temper to suit forming operations and performance required.

C. Aluminum Extrusions: ASTM B221, alloy and temper recommended by manufacturer for type of use and finish indicated, finished as follows:

D. Stainless Steel Sheet: ASTM A240/A240M or ASTM A666, Type 304.

2.4 UNDERLAYMENT MATERIALS

A. Self-Adhering, High-Temperature Sheet: Minimum 40 mils thick, consisting of slip-resisting polyethylene-film top surface laminated to layer of butyl or SBS-modified asphalt adhesive, with release-paper backing; cold applied. Provide primer when recommended by underlayment manufacturer.

1. Thermal Stability: ASTM D1970/D1970M; stable after testing at 240 deg F.
2. Low-Temperature Flexibility: ASTM D1970/D1970M; passes after testing at minus 20 deg F.
3. Manufacturers:
   a. Henry; Blueskin PE 200 HT.
   b. Grace; Bituthene 4000
   c. Or Approved Equal.

B. Apply underlayment only where shown under copings or at reglet transitions; coordinate with roof membrane manufacturer to maintain continuity of air and vapor barriers.

2.5 MISCELLANEOUS MATERIALS

A. Fasteners: Manufacturer's recommended fasteners, suitable for application and designed to meet performance requirements. Furnish the following unless otherwise indicated:

1. Exposed Penetrating Fasteners: Gasketed screws with hex washer heads matching the color and finish of adjacent metal surfaces.
2. Fasteners for Stainless Steel Sheet: Series 300 stainless steel.

B. Butyl Sealant: ASTM C1311, single-component, solvent-release butyl rubber sealant; polyisobutylene plasticized; heavy bodied for hooked-type joints with limited movement.

2.6 FINISHES

A. Comply with NAAMM's "Metal Finishes Manual for Architectural and Metal Products" for recommendations for applying and designating finishes.

B. Protect mechanical and painted finishes on exposed surfaces from damage by applying a strippable, temporary protective covering before shipping.

C. Appearance of Finished Work: Noticeable variations in same piece are unacceptable. Variations in appearance of adjoining components are acceptable if they are within the range of approved Samples and are assembled or installed to minimize contrast.

D. Coil-Coated Aluminum Sheet Finishes:

1. High-Performance Organic Finish: Prepare, pretreat, and apply coating to exposed metal surfaces to comply with coating and resin manufacturers' written instructions.
   a. Two-Coat Fluoropolymer: AAMA 2605. Fluoropolymer finish containing not less than 70 percent polyvinylidene fluoride (PVDF) resin by weight in color coat. Prepare, pretreat, and apply coating to exposed metal surfaces to comply with coating and resin manufacturers' written instructions.

E. Aluminum Extrusion Finishes:

1. High-Performance Organic Finish: Prepare, pretreat, and apply coating to exposed metal surfaces to comply with coating and resin manufacturers' written instructions.
   a. Two-Coat Fluoropolymer: AAMA 2605. Fluoropolymer finish containing not less than 70 percent polyvinylidene fluoride (PVDF) resin by weight in color coat. Prepare, pretreat, and apply coating to exposed metal surfaces to comply with coating and resin manufacturers' written instructions.
   b. Visual Quality: Finish shall be uniform in color and gloss across adjoining components when viewed from 10 feet under diffuse daylight.

PART 3 - EXECUTION

3.1 EXAMINATION

A. Examine substrates, areas, and conditions, with Installer present, to verify actual locations, dimensions, and other conditions affecting performance of the Work.

B. Examine walls, roof edges, and parapets for suitable conditions for roof specialties.

C. Verify that substrate is sound, dry, smooth, clean, sloped for drainage where applicable, and securely anchored.

D. Proceed with installation only after unsatisfactory conditions have been corrected.

3.2 INSTALLATION OF UNDERLAYMENT

A. Self-Adhering Sheet Underlayment: Apply self-adhering sheet underlayment on clean, dry substrates in accordance with manufacturer’s written instructions and within temperature limits recommended. Install smooth, wrinkle-free, and fully adhered, with end laps of not less than 6 inches staggered 24 inches between courses. Overlap side edges not less than 3-1/2 inches. Roll laps with roller. Cover underlayment within 14 days.

1. Apply continuously under copings.
2. Coordinate application of self-adhering sheet underlayment under roof specialties with requirements for continuity with adjacent air barrier materials.

3.3 INSTALLATION, GENERAL

A. Install roof specialties according to manufacturer's written instructions. Anchor roof specialties securely in place, with provisions for thermal and structural movement. Use fasteners, solder, protective coatings, separators, underlayments, sealants, and other miscellaneous items as required to complete roof-specialty systems.

1. Install roof specialties level, plumb, true to line and elevation; with limited oil-canning and without warping, jogs in alignment, buckling, or tool marks.
2. Provide uniform, neat seams with minimum exposure of solder and sealant.
3. Install roof specialties to fit substrates and to result in weathertight performance. Verify shapes and dimensions of surfaces to be covered before manufacture.
4. Torch cutting of roof specialties is not permitted.
5. Do not use graphite pencils to mark metal surfaces.

B. Metal Protection: Protect metals against galvanic action by separating dissimilar metals from contact with each other or with corrosive substrates by painting contact surfaces with bituminous coating or by other permanent separation as recommended by manufacturer.

1. Coat concealed side of uncoated aluminum roof specialties with bituminous coating where in contact with wood, ferrous metal, or cementitious construction.
2. Bed flanges in thick coat of asphalt roofing cement where required by manufacturers of roof specialties for waterproof performance.

C. Expansion Provisions: Allow for thermal expansion of exposed roof specialties.

1. Space movement joints at a maximum of 12 feet with no joints within 18 inches of corners or intersections unless otherwise indicated on Drawings.
2. When ambient temperature at time of installation is between 40 and 70 deg F, set joint members for 50 percent movement each way. Adjust setting proportionately for installation at higher ambient temperatures.

D. Fastener Sizes: Use fasteners of sizes that penetrate wood blocking or sheathing not less than 3/4 inch for wood screws and not less than recommended by fastener manufacturer to achieve maximum pull-out resistance.

E. Seal concealed joints with butyl sealant as required by roofing-specialty manufacturer.

F. Seal joints as required for weathertight construction. Place sealant to be completely concealed in joint. Do not install sealants at temperatures below 40 deg F.

G. Field Quality Control: Final installation shall be inspected jointly by roofing and sheet-metal installers to verify proper lapping, fastening, and integration with roofing membranes prior to requesting manufacturer inspection.

3.4 INSTALLATION OF GUTTERS AND DOWNSPOUTS

A. Install painted aluminum gutters and downspouts where indicated on Drawings, securely anchored, aligned, and sloped to drain. Provide box gutter profiles and square downspout profiles unless otherwise indicated; defer to Drawings for sizes and locations.

B. Coordinate downspout terminations with cast iron boots and underground stormwater-management systems shown on applicable Civil Drawings and specified in applicable civil sections.

C. Provide matching PVDF-coated accessories, straps, brackets, elbows, offsets, end caps, miters, outlets, and fasteners required for complete gutter and downspout systems.

3.5 INSTALLATION OF REGLETS AND COUNTERFLASHINGS

A. Coordinate installation of reglets and counterflashings with installation of base flashings.

B. Embedded Reglets: See Section 042000 "Unit Masonry" for installation of reglets.

C. Surface-Mounted Reglets: Install reglets to receive flashings where flashing without embedded reglets is indicated on Drawings. Install at height so that inserted counterflashings overlap 4 inches minimum over top edge of base flashings.

D. Counterflashings: Insert counterflashings into reglets or other indicated receivers; ensure that counterflashings overlap 4 inches minimum over top edge of base flashings. Lap counterflashing joints a minimum of 4 inches and bed with butyl sealant. Fit counterflashings tightly to base flashings.

E. Coordinate counterflashing terminations with roof and wall sealant joints; provide sealant per Section 079200 “Joint Sealants.”

3.6 CLEANING AND PROTECTION

A. Clean exposed metal surfaces of substances that interfere with uniform oxidation and weathering.

B. Clean and neutralize flux materials. Clean off excess solder and sealants.

C. Remove temporary protective coverings and strippable films as roof specialties are installed. On completion of installation, clean finished surfaces, including removing unused fasteners, metal filings, pop rivet stems, and pieces of flashing. Maintain roof specialties in a clean condition during construction.

D. Replace roof specialties that have been damaged or that cannot be successfully repaired by finish touchup or similar minor repair procedures.

END OF SECTION 077100

SECTION 077113 – MANUFACTURED COPINGS AND FASCIA

PART 1 – GENERAL

1.1 RELATED DOCUMENTS

A. Drawings and general provisions of the Contract, including the Conditions of the Contract and Division 01 Specification Sections apply to this section.

1.2 SUMMARY

A. Provide all labor, equipment, and materials to fabricate and install the following.
1. Coping cap at parapets
2. Fascia and edge material and trims
3. Roof-edge–adjacent expansion joint covers integral with coping and fascia systems.

B. Related Sections:
1. Division 07 Section Common Work Results for Thermal and Moisture Protection

C. Related Work Specified Elsewhere:
1. Section 061000 - Rough Carpentry.
2. Section 075516 - Modified Bituminous Membrane Roofing
3. Section 077200 - Roof Accessories
4. Section 079200 - Joint Sealants
5. Section 074216 - Metal Wall Panel Rainscreen
6. Section 079513.13 –Interior expansion joint cover assemblies.

1.3 REFERENCES

A. American Society for Testing and Materials (ASTM)
1. ASTM A653 Standard Specification for Steel Sheet, Zinc-Coated (galvanized) or Zinc-Iron Alloy-Coated (galvannealed) by the Hot-Dip Process.
2. ASTM A792 Standard Specification for Steel Sheet, 55% Aluminum-Zinc Alloy Coated by the Hot-Dip Process.
3. ASTM B209 Standard Specification for Aluminum and Aluminum-Alloy Sheet and Plate.
4. ASTM B221 Standard Specification for Aluminum and Aluminum-Alloy Extruded Bars, Rods, Wire, Profiles, and Tubes.

B. American National Standards Institute and Single Ply Roofing Institute (ANSI/SPRI), “Wind Design Standard for Edge Systems Used with Low-Slope Roofing Systems.”

C. UL (Underwriters Laboratories) – General Listings as applicable.

D. Sheet Metal and Air Conditioning Contractors National Association (SMACNA) - “Architectural Sheet Metal Manual,” latest edition.

E. National Roofing Contractors Association (NRCA), “Roofing Manual,” latest edition.

F. American Society of Civil Engineers (ASCE), ASCE 7 Minimum Design Loads for Buildings and Other Structures.

G. AAMA 2605, “Voluntary Specification, Performance Requirements and Test Procedures for High-Performance Organic Coatings on Architectural Aluminum Extrusions and Panels.”

1.4 SUBMITTALS FOR REVIEW

A. Product Data:
   1. Provide manufacturer's specification data sheets for each product.
   2. Metal material characteristics and installation recommendations.
   3. Submit color chart prior to material ordering and/or fabrication so that equivalent colors to those specified can be approved.

B. Samples: Upon request, submit two (2) samples, illustrating typical metal edge, coping, gutters, fascia extenders for material and finish.

C. Shop Drawings
   1. For manufactured and ANSI/SPRI ES-1 compliant shop fabricated gravel stops, fascia, scuppers, and all other sheet metal fabrications.
   2. Indicate material profile, jointing details, fastening methods, flashing, terminations, and installation details.
   3. Indicate type, gauge and finish of metal.
   4. Indicate ES-1 tested profile(s) and attachment for each edge condition; show cleat/base anchor gauge, fastener type/spacing, splice/joint treatment, and thermal-movement provisions.

D. Specimen Warranty: Provide an unexecuted copy of the warranty specified for this Project, identifying the terms and conditions required of the Manufacturer and the Owner.

E. ES-1 Certification: Manufacturer letter identifying the specific tested assembly/profile numbers proposed for each edge/coping condition and the allowable RE-1, RE-2, and RE-3 pressures.

1.5 SUBMITTALS FOR INFORMATION

A. Design Loads: PE-sealed statement that submitted edge systems meet or exceed project ASCE 7 design pressures in the applicable roof zones and comply with ANSI/SPRI ES-1 (RE-1, RE-2, RE-3 as applicable).

B. Manufacturer Certification: Letter confirming proposed components match those used in ES-1 testing for the listed assemblies.

C. A letter from the manufacturing company certifying that the materials furnished for this project are the same as represented in tests and supporting data.

D. Mill production reports certifying that the steel thicknesses are within allowable tolerances of the nominal or minimum thickness or gauge specified.

E. Certification of work progress inspection. Refer to Quality Assurance Article below.

F. Certifications.
   1. Submit roof manufacturer's certification that metal fasteners furnished are acceptable to roof manufacturer.
   2. Submit roof manufacturer's certification that metal furnished is acceptable to roofing manufacturer as a component of roofing system and is eligible for roof manufacturer's system warranty.

1.6 CONTRACT CLOSEOUT SUBMITTALS

A. General: Comply with Requirements of Section 01 78 00 – Closeout Submittals

B. Special Project Warranty: Provide specified warranty for the Project, executed by the authorized agent of the Manufacturer.

C. Roofing Maintenance Instructions. Provide a manual of manufacturer's recommendations for maintenance of installed roof-edge systems.

1.7 QUALITY ASSURANCE

A. Engage an experienced roofing contractor specializing in sheet metal flashing work with a minimum of five (5) years experience.

B. Maintain a full-time supervisor/foreman who is on the job-site at all times during installation. Foreman must have a minimum of five (5) years experience with the installation of similar system to that specified.

C. Source Limitation: Provide copings, fasciae, cleats/base anchors, splice plates, and accessories from a single edge-metal manufacturer listed by the roofing manufacturer as compatible.

D. Upon request fabricator/installer shall submit work experience and evidence of financial responsibility. The Owner's representative reserves the right to inspect fabrication facilities in determining qualifications.

1.8 DELIVERY, STORAGE, AND HANDLING

A. Deliver materials in manufacturer's original, unopened containers or packages with labels intact and legible.

B. Stack pre-formed and pre-finished material to prevent twisting, bending, or abrasion, and to provide ventilation. Slope metal sheets to ensure drainage.

C. Prevent contact with materials which may cause discoloration or staining.

1.9 PROJECT CONDITIONS

A. Determine that work of other trades will not hamper or conflict with necessary fabrication and storage requirements for pre-formed metal edge system.

B. Coordinate edge-metal blocking heights with roof insulation/cover board thickness so top of blocking is flush with roof system for continuous support.

1.10 DESIGN AND PERFORMANCE CRITERIA

A. Thermal expansion and contraction:
   1. Completed metal edge flashing system, shall be capable of withstanding expansion and contraction of components caused by changes in temperature without buckling, producing excess stress on structure, anchors or fasteners, or reducing performance ability.

B. Design Uplift Pressure (ASCE 7-22 ASD)
   1. Main Roof Areas:
      a. Basic Velocity Pressure: 15.18 psf
      b. Horizontal Design Pressure: 21.86 psf
      c. Vertical Design Pressure: 51.31 psf

C. ES-1 Compliance: Provide perimeter edge and coping systems tested and certified to ANSI/SPRI ES-1. Submit allowable RE-1 (horizontal), RE-2/RE-3 (vertical) values that meet or exceed calculated ASCE 7 pressures for each condition.

1.11 WARRANTIES

A. Owner shall receive one (1) warranty from manufacturer of roofing materials covering all of the following criteria. Multiple-source warranties are not acceptable.
   1. Finish Warranty: 30-year, non-prorated PVDF finish warranty per AAMA 2605 covering color fade (≤5 ΔE Hunter), chalk (≤8), and film integrity.
   2. Changes: Changes or alterations in the edge metal system without prior written consent from the manufacturer shall render the system unacceptable for a warranty.
   3. Warranty shall commence on date of substantial completion or final payment, whichever is agreed by contract.
   4. Installer Warranty: Two (2) years, labor and materials, watertightness and attachment integrity of edge systems.
   5. Installing roofing contractor shall be responsible for the installation of the edge metal system in general accordance with the membrane manufacturer's recommendations.
   6. Installing contractor shall certify that the edge metal system has been installed per the manufacturer's printed details and specifications.
   7. Manufacturer Edge-Metal System Warranty: 20-year edge-system warranty covering wind performance when installed per tested ES-1 assembly.

PART 2 – PRODUCTS

2.1 PRODUCTS, GENERAL

A. Refer to Division 01 Section "Common Product Requirements."

B. Basis of Design: The Garland Company – "R-Mer" edge systems, or approved equal.

C. Substitutions: Products proposed as equal to the products specified in this Section shall be submitted in accordance with Bidding Requirements and Division 01 provisions.
   1. Proposals shall be accompanied by a copy of the manufacturer's standard specification section.
   2. Include a list of three (3) projects of similar type and extent, located within a one hundred mile radius from the location of the project. In addition, the three projects must be at least five (5) years old and be available for inspection by the Architect, Owner or Owner's Representative.
   3. Equivalency of performance criteria, warranty terms, submittal procedures, and contractual terms will constitute the basis of acceptance.
   4. The Owner's decision regarding substitutions will be considered final. Unauthorized substitutions will be rejected.

2.2 ACCEPTABLE MANUFACTURERS

A. Provide metal roof edge systems manufactured by the roof membrane manufacturer.or approved equal.

2.3 MATERIALS

A. General: Product designations for the materials used in this section shall be based on performance characteristics of the "R-Mer" metal edge system manufactured by The Garland Company, Cleveland, OH, and shall form the basis of the contract documents. Or approved equal

B. Materials: Minimum gauge of steel or thickness of Aluminum to be specified in accordance with Architectural Sheet Metal Manual, Sheet Metal and Air Conditioning Contractor's National Association, Inc. recommendations.

C. Flash-less Snap-On Fascia Cover and Splice Plate

1. Aluminum, ASTM B209, alloy 3105-H14, in thickness of .050" nom.

D. Flash-less Snap-On Fascia Extruded Base Anchor

1. Base Anchor and Anchor Splice Plates: 6005A-T61 extruded aluminum

2. Compression Seal for top of anchor: TPE thermoplastic elastomer.

3. Sealant at Base Anchor/Flanges: Single-component, high-performance, moisture-cure polyether, non-staining, compatible with substrates; as recommended by edge-metal manufacturer.

E. Coping Cap Cover and Splice Plate (R-Mer Edge Coping)

1. Aluminum, ASTM B209, alloy 3105-H14, in thickness of.050" nom.

F. Coping Chairs

1. Zinc-coated steel, ASTM A653, coating designation G-90, in thickness of 0.0635 nom./ 16 gauge, 36" to 48" by coil length, chemically treated, commercial or lock-forming quality.

G. Finishes

1. Aluminum: 70% PVDF coil-coated system meeting AAMA 2605; primer ≥0.2 mil; color coat ≥0.7 mil; gloss 25 ± 5 at 60°. Color as selected from manufacturer's standard range.
2. Steel (if used for exposed covers): 70% PVDF over G-90 or AZ50 substrate meeting AAMA 2605.
3. Mill Finish (concealed components only): as furnished by mill/manufacturer.

2.4 RELATED MATERIALS AND ACCESSORIES

A. Sheet Metal Flat Stock for Fabricated Flashing and Trim Pieces: Sheet stock for fabricated metal components, extenders, and trims shall be same material, gauge, and color as coping and fascia.

B. Metal Primer: Zinc chromate type.

C. Plastic Cement: ASTM D 4586

D. Sealant: Specified in Section 079200 or on drawings.

E. Self-Adhering Underlayment, one of the following:

1. 60 mil minimum transition strip

2. 45 mil high temperature underlayment with cross laminated polymer surface

F. Slip Sheet: Rosin building paper.

G. Fasteners:

1. Corrosion resistant screw fastener as recommended by metal manufacturer. Finish exposed fasteners same as flashing metal.

2. Fastening shall conform to the tested ES-1 assembly and project ASCE 7 design pressures; use stainless steel fasteners at exposed conditions unless otherwise recommended by manufacturer.

H. Gutter and Downspout Anchorage Devices: Material as specified for system

PART 3 – EXECUTION

1. EXECUTION, GENERAL

A. Refer to Division 07 Section Common Work Results for Thermal and Moisture Protection.

B. Coordinate edge-metal installation with roofing to ensure continuous waterproofing, proper sequencing of cleats/base anchors, and correct membrane terminations.

2. PROTECTION

A. Isolate metal products from dissimilar metals, masonry or concrete with bituminous paint, tape, or slip sheet. Use gasketed fasteners where required to prevent corrosive reactions.

3. GENERAL

A. Provide continuous cleats/base anchors where required by the tested ES-1 assembly; do not face-fasten exposed covers.Fastening of metal to walls and wood blocking shall comply with building code standards.

B. Install maximum 10-0" lengths; provide 3/8-inch expansion joint at each splice (or as required by manufacturer) with internal splice/backup plates.

C. Lap and seal splices per manufacturer; maintain positive drainage on horizontal elements.

D. Fasten to wood blocking or substrate with fasteners and spacing shown in the ES-1 submittal; do not reduce tested fastener schedules.

4. INSPECTION

A. Verify that curbs are solidly set and nailing strips located.

B. Perform field measurements prior to fabrication.

C. Coordinate work with work of other trades.

D. Verify that substrate is dry, clean and free of foreign matter.

E. Commencement of installation shall be considered acceptance of existing conditions.

5. MANUFACTURED SHEET METAL SYSTEMS

A. Furnish and install manufactured fascia and coping cap systems in strict accordance with manufacturer's printed instructions. Install only the ES-1 tested combination of cover, cleat/base anchor, fasteners, splice plates, and joint treatment submitted for this project. Install only the ES-1 tested combination of cover, cleat/base anchor, fasteners, splice plates, and joint treatment submitted for this project.

B. Provide factory-fabricated accessories including, but not limited to, fascia extenders, miters, scuppers, joint covers, etc. refer to Source limitation provision in Part 1.

6. SHOP-FABRICATED SHEET METAL

A. Metal work shall be shop fabricated to configurations and forms in accordance with recognized sheet metal practices.

B. Hem exposed edges.

C. Angle bottom edges of exposed vertical surfaces to form drip.

D. Lap corners with adjoining pieces fastened and set in sealant.

E. Form joints for gravel stop fascia system, coping cap with a 3/8" opening between sections. Back the opening with an internal drainage plate formed to the profile of fascia piece.

F. Install sheet metal to comply with ANSI/SPRI ES-1, SMACNA, and NRCA standards.

7. FLASHING INSTALLATION

A. Flash-less Snap-On Fascia Detail with Extruded Aluminum Base Anchor
1. Extend roof membrane to edge per roofing section; terminate on wood nailer/edge blocking as detailed (do not wrap over outside edge unless required by system)
2. Shim as needed to establish true plane.
3. Set continuous base anchor/cleat; apply manufacturer-recommended sealant bead(s) at flange as required.
4. Fasten base anchor/cleat through pre-punched slots at spacing indicated in ES-1 submittal; start fasteners 6 inches from ends.
5. Install compression seals or gaskets where part of the tested assembly.
6. Install fascia covers by "snap-on" engagement without rotation; provide splice plates at each joint.
7. Seal ends/joints per manufacturer to prevent water migration behind anchors.

B. Snap-On Coping Cap Detail
1. Install Miters first.
2. Position base flashing of the Built-Up and/or Modified Roofing membrane over the wall edge covering nailers completely, fastening eight (8) inches on center. Install membrane and cap sheet with proper material and procedure according to manufacturer's recommendations.
3. Install anchor chairs/continuous cleats at spacing required by ES-1 submittal, typically 48 inches o.c. maximum unless closer spacing is indicated.
4. Provide 6-inch wide internal splice plates and sealant beads as recommended by manufacturer; hook exterior hem over outside chair/cleat and snap interior hem to engage.

C. Expansion Joint Covers Expansion Joint Covers – Curb-to-Wall

1. This Article applies only to roof expansion joints occurring at parapets, curbs, or perimeter conditions where metal coping or fascia systems are present.
2. Fabricate expansion joint covers from .050 mill finish aluminum in profiles as detailed on the drawings and according to field-measured conditions.
3. Maintain minimum curb height of 8". Raise curbs where final height above finished roof does not meet required minimums. Mechanically attach wood

cant to expansion joint nailers. Run all field plies over cant a minimum of 2 inches (50 mm).

4. Install compressible insulation within joint in minimum 20 mil vinyl vapor barrier cradle.
5. Install base flashing ply covering curb set in bitumen with 6 inches (152 mm) on to field of the roof.
6. Install a second ply of modified flashing ply in bitumen over the base flashing ply, 9 inches (228 mm) on to the field of the roof. Attach top of membrane to top of curb and nail at 8 inches (203 mm) o.c. Apply a three-course application of mastic and mesh at all vertical seams and allow to cure and aluminize.
7. Install self-adhering high-temperature underlayment across joint, lapping onto vertical and horizontal substrates per manufacturer (minimum 3 inches).
8. Fabricate and install counterflashing cleat to curb. Fasten 8" on center.
9. Fabricate and install metal expansion joint cover and splice plates. Cover shall be formed so that when installed, positive slope towards the roof is maintained. Roof-to-wall expansion joint covers that hold any water will be rejected and replaced. Install cover, hooking onto cleat and attaching to wall with clips. Maintain clearances for expansion and contraction as shown on detail drawings.
10. Where no through-wall flashing exists, install surface-mounted counterflashing with sealant reglet; seal top with silicone-modified urethane.

8. CLEANING

A. Clean installed work in accordance with the manufacturer's instructions.

B. Replace damaged work than cannot be restored by normal cleaning methods.

9. CONSTRUCTION WASTE MANAGEMENT

A. Remove and properly dispose of waste products generated. Comply with requirements of authorities having jurisdiction.

10. FINAL INSPECTION

A. At completion of installation and associated work, meet with Contractor, Architect, installer, installer of associated work, Owner, roofing system manufacturer's representative, and other representatives directly concerned with performance of roofing system.

B. Inspect work and flashing of roof penetrations, walls, curbs, and other equipment. List all items requiring correction or completion and furnish copy of list to each party in attendance.

C. Repair or replace deteriorated or defective work found at time above inspection as required to a produce an installation which is free of damage and deterioration at time of Substantial Completion and according to warranty requirements.

D. Notify the Architect upon completion of corrections.

E. Following the final inspection, provide written notice of acceptance of the installation from the roofing system manufacturer.

F. Correct any leakage observed during construction promptly upon notification by Owner.

11. DEMONSTRATION AND TRAINING

A. At a time and date agreed to by the Owner, instruct the Owner's facility manager, or other representative designated by the Owner, on the following procedures:
   1. Troubleshooting procedures
   2. Notification procedures for reporting leaks or other apparent roofing problems
   3. Maintenance
   4. The Owner's obligations for maintaining the warranty in effect and force
   5. The Manufacturer's obligations for maintaining the warranty in effect and force.

END OF SECTION 077113

SECTION 077200 - ROOF ACCESSORIES

PART 1 - GENERAL

1.1 RELATED DOCUMENTS

A. Drawings and general provisions of the Contract, including General and Supplementary Conditions and Division 01 Specification Sections, apply to this Section.

1.2 SUMMARY

A. Section Includes:

1. Roof curbs.
2. Equipment supports.
3. Sound and vibration isolation provisions for rooftop equipment mounted on roof curbs and equipment supports.
4. Roof hatches.
5. Pipe supports.
6. Pipe portals.

B. Related Requirements:

1. Section 055000 "Metal Fabrications" for metal vertical ladders, ships' ladders, and stairs for access to roof hatches.
2. Section 076200 "Sheet Metal Flashing and Trim" for shop- and field-formed metal flashing, roof-drainage systems, roof expansion-joint covers, and miscellaneous sheet metal trim and accessories.
3. Section 077100 "Roof Specialties" for manufactured fasciae, copings, gravel stops, gutters and downspouts, and counterflashing.
4. Division 23 - Mechanical.

1.3 COORDINATION

A. Coordinate layout and installation of roof accessories with roofing membrane and base flashing and interfacing and adjoining construction to provide a leakproof, weathertight, secure, and noncorrosive installation.

B. Coordinate dimensions with rough-in information or Shop Drawings of equipment to be supported.

1.4 ACTION SUBMITTALS

A. Product Data: For each type of roof accessory.

1. Include construction details, material descriptions, dimensions of individual components and profiles, and finishes.

B. Shop Drawings: For roof accessories.

1. Include plans, elevations, keyed details, and attachments to other work. Indicate dimensions, loadings, and special conditions. Distinguish between plant- and field-assembled work.

PART 2 - PRODUCTS

2.1 PERFORMANCE REQUIREMENTS

A. General Performance: Roof accessories shall withstand exposure to weather and resist thermally induced movement without failure, rattling, leaking, or fastener disengagement due to defective manufacture, fabrication, installation, or other defects in construction.

2.2 MATERIALS, GENERAL

A. Aluminum Sheet: ASTM B 209 (ASTM B 209M) for alclad alloy 3005H25 or alloy and temper required to suit forming operations, with mill finish, unless otherwise indicated.

B. Galvanized Steel Sheet: ASTM A 653/A 653M with G90 (Z275) coating designation; commercial quality, unless otherwise indicated.

1. Structural Quality: Grade 40 (Grade 275), where indicated or as required for strength.

C. Insulation: Manufacturer's standard rigid or semirigid glass-fiber board of thickness indicated.

D. Wood Nailers: Softwood lumber, pressure treated with waterborne preservatives for aboveground use, complying with AWPA C2; not less than 1-1/2 inches (38 mm) thick.

E. Fasteners: Same metal as metals being fastened, or nonmagnetic stainless steel or other noncorrosive metal as recommended by manufacturer. Match finish of exposed fasteners with finish of material being fastened.

1. Where removing exterior exposed fasteners affords access to building, provide nonremovable fastener heads.

F. Bituminous Coating: SSPC-Paint 12, solvent-type bituminous mastic, nominally free of sulfur and containing no asbestos fibers, compounded for 15-mil (0.4-mm) dry film thickness per coating.

G. Mastic Sealant: Polyisobutylene; nonhardening, nonskinning, nondrying, nonmigrating sealant.

H. Elastomeric Sealant: Generic type recommended by unit manufacturer that is compatible with joint surfaces; ASTM C 920, Type S, Grade NS, Class 25, and Uses NT, G, A, and, as applicable to joint substrates indicated, O.

I. Roofing Cement: ASTM D 4586, nonasbestos, fibrated asphalt cement designed for trowel application or other adhesive compatible with roofing system.

2.3 ROOF CURBS

A. Manufacturers: Subject to compliance with requirements, manufacturers offering products that may be incorporated into the Work include, but are not limited to, the following:

1. Pate Co. (The).
2. AES Industries.

3. Or approved equal.

B. Roof Curbs: Internally reinforced roof-curb units capable of supporting superimposed live and dead loads, including equipment loads and other construction indicated on Drawings, bearing continuously on roof structure, and capable of meeting performance requirements; with welded or mechanically fastened and sealed corner joints, straight sides, and integrally formed deck-mounting flange at perimeter bottom.

C. Size: Coordinate dimensions with roughing-in information or Shop Drawings of equipment to be supported.

D. Supported Load Capacity: Coordinate load capacity with information on Shop Drawings of equipment to be supported.

E. Where rooftop mechanical or electrical equipment is mounted on roof curbs, provide sound- and vibration-isolated attachment using manufacturer’s standard isolation rails, pads, or curb-mounted isolation assemblies coordinated with equipment loads and attachment requirements.

F. Material: 18 Gauge minimum, galvanized steel sheet with welded and mitered corners.

1. Finish: Manufacturer's standard finish.

G. Construction:

1. Curb Profile: Profile as indicated on Drawings compatible with roofing system.
2. Fabricate curbs to minimum height of 12 inches above roofing surface unless otherwise indicated.
3. Top Surface: Level top of curb, with roof slope accommodated by sloping deck-mounting flange.
4. Insulation: Factory insulated with 1-1/2-inch thick glass-fiber board insulation.
5. Liner: Same material as curb, of manufacturer's standard thickness and finish.
6. Nailer: Factory-installed preservative treated wood nailer along top flange of curb, continuous around curb perimeter.
7. Metal Counterflashing: Manufacturer's standard, removable, fabricated of same metal and finish as curb.

2.4 EQUIPMENT SUPPORTS

A. Equipment Supports: Rail-type metal equipment supports capable of supporting superimposed live and dead loads between structural supports, including equipment loads and other construction indicated on Drawings, spanning between structural supports; capable of meeting performance requirements; with welded corner joints, and integrally formed structure-mounting flange at bottom.

B. Size: Coordinate dimensions with roughing-in information or Shop Drawings of equipment to be supported.

C. Supported Load Capacity: Coordinate load capacity with information on Shop Drawings of equipment to be supported.

D. Material: Galvanized steel sheet, 18 gauge minimum.

1. Finish: Manufacturer's standard finish.

E. Construction:

1. Curb Profile: Profile as indicated on Drawings compatible with roofing system.
2. Insulation: Factory insulated with 1-1/2-inch thick glass-fiber board insulation.
3. Liner: Same material as equipment support, of manufacturer's standard thickness and finish.
4. Nailer: Factory-installed continuous wood nailers on top flange of equipment supports, continuous around support perimeter.
5. Metal Counterflashing: Manufacturer's standard, removable, fabricated of same metal and finish as equipment support.
6. On ribbed or fluted metal roofs, form deck-mounting flange at perimeter bottom to conform to roof profile.
7. Fabricate equipment supports to minimum height of 12 inches above roofing surface unless otherwise indicated.

2.5 VIBRATION AND SOUND ISOLATION

A. Provide manufacturer’s standard vibration- and sound-isolation components integral with or installed at rooftop equipment supports and roof curbs, including neoprene, elastomeric, or composite isolation pads, rails, or curb-mounted isolation systems compatible with supported equipment and roofing system.

B. Isolation components shall be designed to reduce structure-borne noise and vibration transmission into the building and shall not compromise roof curb structural performance, weather tightness, or roofing manufacturer’s warranty.

C. Rigid metal-to-metal attachment of rooftop equipment directly to roof curbs or equipment supports is not permitted without resilient isolation elements.

2.6 ROOF HATCHES

A. Roof Hatches: Metal roof-hatch units with lids and insulated double-walled curbs, welded or mechanically fastened and sealed corner joints, continuous lid-to-curb counterflashing, weathertight perimeter gasketing, straight sides, and integrally formed deck-mounting flange at perimeter bottom.

1. Manufacturer / Basis of Design: The BILCO Company, Type L roof hatch, or approved equal.

B. Type and Size: Single-leaf lid; size as indicated on Drawings.

C. Provide thermally broken, insulated roof hatch assembly suitable for installation in the indicated roof assembly.

D. Performance Requirements:

1. Cover shall be reinforced to support applicable live loads and wind loads required by code and authorities having jurisdiction.
2. Operation of cover shall be smooth and controlled throughout the full range of opening and closing.
3. Entire hatch assembly shall be weathertight.

E. Cover, curb, hardware, lifting mechanisms, gasketing, insulation, and finish shall be manufacturer's standard for specified roof hatch type, unless otherwise indicated.

F. Provide curb height coordinated with roof insulation thickness, flashing height, and roofing manufacturer's requirements. Minimum curb height shall be 12 inches above finished roof surface unless otherwise indicated.

G. Provide safety railing system and ladder-assist post where indicated on Drawings or required by authorities having jurisdiction.

H. Safety Railing System: Provide roof-hatch manufacturer's standard safety railing system where indicated on Drawings or required by authorities having jurisdiction. System shall comply with applicable OSHA requirements and authorities having jurisdiction.

I. Ladder-Assist Post: Provide roof-hatch manufacturer's standard ladder-assist post where indicated on Drawings or required by authorities having jurisdiction.

2.7 PIPE AND DUCT SUPPORTS

A. Adjustable-Height Roller-Bearing Pipe Supports: Polycarbonate pipe stand base, pipe support, and roller housing, with stainless steel threaded rod designed for adjusting support height, accommodating up to 18-inch diameter pipe or conduit; with provision for pipe retainer and with manufacturer's support pad or deck plate as recommended for penetration-free installation over roof membrane type; as required for quantity of pipe runs and sizes.

2.8 PIPE PORTALS

A. Construction:

1. Curb-Mounted Pipe Portal: Insulated roof-curb units with welded or mechanically fastened and sealed corner joints, straight sides, and integrally formed deck-mounting flange at perimeter bottom; with weathertight curb cover with single or multiple collared openings and pressure-sealed conically shaped EPDM protective rubber caps sized for piping indicated, with stainless steel snaplock swivel clamps.
2. Curbs shall be minimum of 14" high and have full thermal break.
3. Pipe chase housing shall be .080 aluminum with UV resistant powder coasted finish.
4. Lid of housing shall be insulated.

B. Manufacturers: Subject to compliance with performance requirements:

1. Basis of Design: ALTA Products - Small Pipe Chase Housing.
2. Or approved equal.

2.9 PREFORMED FLASHING SLEEVES

A. Vent Stack Flashing: Metal flashing sleeve, uninsulated, with integral deck flange, and storm collar.

1. Manufacturers: Subject to compliance with performance requirements:
   a. Basis of Design: Custom Solution Roof and Metal Products
   b. Or approved equal.
2. Metal: Galvanized steel, 16 gauge.
3. Height: As indicated on Drawings.

4. Diameter: As indicated on Drawings.
5. Finish: Manufacturer's standard.

2.10 METAL MATERIALS

A. Zinc-Coated (Galvanized) Steel Sheet: ASTM A653/A653M, G90 coating designation and mill phosphatized for field painting where indicated.

1. Mill-Phosphatized Finish: Manufacturer's standard for field painting.
2. Factory Prime Coating: Where field painting is indicated, apply pretreatment and white or light-colored, factory-applied, baked-on epoxy primer coat, with a minimum dry film thickness of 0.2 mil.
3. Exposed Coil-Coated Finish: Prepainted by the coil-coating process to comply with ASTM A755/A755M. Prepare, pretreat, and apply coating to exposed metal surfaces to comply with coating and resin manufacturers' written instructions.
   a. Two-Coat Fluoropolymer Finish: AAMA 621. System consisting of primer and fluoropolymer color topcoat containing not less than 70 percent polyvinylidene fluoride (PVDF) resin by weight.
4. Baked-Enamel or Powder-Coat Finish: After cleaning and pretreating, apply manufacturer's standard two-coat, baked-on finish consisting of prime coat and thermosetting topcoat to a minimum dry film thickness of 2 mils.
5. Concealed Finish: Pretreat with manufacturer's standard white or light-colored acrylic or polyester-backer finish consisting of prime coat and wash coat, with a minimum total dry film thickness of 0.5 mil.

B. Stainless Steel Sheet and Shapes: ASTM A240/A240M or ASTM A666, Type 304.

C. Steel Shapes: ASTM A36/A36M, hot-dip galvanized according to ASTM A123/A123M unless otherwise indicated.

D. Steel Tube: ASTM A500/A500M, round tube.

E. Galvanized-Steel Tube: ASTM A500/A500M, round tube, hot-dip galvanized according to ASTM A123/A123M.

2.11 MISCELLANEOUS MATERIALS

A. Provide materials and types of fasteners, protective coatings, sealants, and other miscellaneous items required by manufacturer for a complete installation.

B. Glass-Fiber Board Insulation: ASTM C726, nominal density of 3 lb/cu. ft., thermal resistivity of 4.3 deg F x h x sq. ft./Btu x in. at 75 deg F, thickness as indicated.

C. Polyisocyanurate Board Insulation: ASTM C1289, thickness and thermal resistivity as indicated.

D. Wood Nailers: Softwood lumber, pressure treated with waterborne preservatives for aboveground use, acceptable to authorities having jurisdiction, containing no arsenic or chromium, and complying with AWPA C2; not less than 1-1/2 inches thick.

E. Bituminous Coating: Cold-applied asphalt emulsion complying with ASTM D1187/D1187M.

F. Underlayment:

1. Polyethylene Sheet: 6-mil- thick polyethylene sheet complying with ASTM D4397.
2. Self-Adhering, High-Temperature Sheet: Minimum 30 to 40 mils thick, consisting of slip-resisting polyethylene-film top surface laminated to layer of butyl or SBS-modified asphalt adhesive, with release-paper backing; cold applied. Provide primer when recommended by underlayment manufacturer.

G. Fasteners: Roof accessory manufacturer's recommended fasteners suitable for application and metals being fastened. Match finish of exposed fasteners with finish of material being fastened. Provide nonremovable fastener heads to exterior exposed fasteners. Furnish the following unless otherwise indicated:

1. Fasteners for Zinc-Coated or Aluminum-Zinc Alloy-Coated Steel: Series 300 stainless steel or hot-dip zinc-coated steel according to ASTM A153/A153M or ASTM F2329.
2. Fasteners for Aluminum Sheet: Series 300 stainless steel.
3. Fasteners for Stainless Steel Sheet: Series 300 stainless steel.

H. Gaskets: Manufacturer's standard tubular or fingered design of neoprene, EPDM, PVC, or silicone or a flat design of foam rubber, sponge neoprene, or cork.

I. Elastomeric Sealant: ASTM C920, elastomeric polyurethane sealant as recommended by roof accessory manufacturer for installation indicated; low modulus; of type, grade, class, and use classifications required to seal joints and remain watertight.

J. Butyl Sealant: ASTM C1311, single-component, solvent-release butyl rubber sealant; polyisobutylene plasticized; heavy bodied for expansion joints with limited movement.

K. Asphalt Roofing Cement: ASTM D4586/D4586M, asbestos free, of consistency required for application.

2.12 GENERAL FINISH REQUIREMENTS

A. Comply with NAAMM's "Metal Finishes Manual for Architectural and Metal Products" for recommendations for applying and designating finishes.

B. Appearance of Finished Work: Noticeable variations in same piece are not acceptable. Variations in appearance of adjoining components are acceptable if they are within the range of approved Samples and are assembled or installed to minimize contrast.

PART 3 - EXECUTION

3.1 EXAMINATION

A. Examine substrates, areas, and conditions, with Installer present, to verify actual locations, dimensions, and other conditions affecting performance of the Work.

B. Verify that substrate is sound, dry, smooth, clean, sloped for drainage, and securely anchored.

C. Verify dimensions of roof openings for roof accessories.

D. Proceed with installation only after unsatisfactory conditions have been corrected.

3.2 INSTALLATION

A. Install roof accessories according to manufacturer's written instructions.

1. Install roof accessories level; plumb; true to line and elevation; and without warping, jogs in alignment, buckling, or tool marks.
2. Anchor roof accessories securely in place so they are capable of resisting indicated loads.
3. Use fasteners, separators, sealants, and other miscellaneous items as required to complete installation of roof accessories and fit them to substrates.
4. Install roof accessories to resist exposure to weather without failing, rattling, leaking, or loosening of fasteners and seals, and in full coordination with roofing manufacturer’s requirements to maintain system warranty.

B. Metal Protection: Protect that substrate is sound, dry, smooth, clean, sloped for drainage, and securely anchored. Substrates supporting roof accessories shall not vary more than 1/4 inch in 10 feet from plane of installation.

1. Coat concealed side of uncoated aluminum roof accessories with bituminous coating where in contact with wood, ferrous metal, or cementitious construction.
2. Underlayment: Where installing roof accessories directly on cementitious or wood substrates, install a course of underlayment and cover with manufacturer's recommended slip sheet.
3. Bed flanges in thick coat of asphalt roofing cement where required by manufacturers of roof accessories for waterproof performance.

C. Roof Curb Installation: Install each roof curb so top surface is level.

D. Equipment Support Installation: Install equipment supports so top surfaces are level with each other.

E. Install rooftop equipment on roof curbs and equipment supports using resilient isolation components as specified, in accordance with equipment manufacturer’s requirements and roof curb manufacturer’s written instructions.

F. Do not rigidly fasten equipment to roof curbs without isolation elements. Verify isolation components are continuous, properly seated, and do not create gaps or conditions that could compromise weather tightness.

G. Roof-Hatch Installation:

1. Verify that roof hatch operates properly. Clean, lubricate, and adjust operating mechanism and hardware.
2. Attach safety railing system to roof-hatch curb.
3. Attach ladder-assist post according to manufacturer's written instructions.

H. Pipe Support Installation: Comply with MSS SP-58 and MSS SP-89. Install supports and attachments as required to properly support piping. Arrange for grouping of parallel runs of horizontal piping, and support together.

1. Pipes of Various Sizes: Space supports for smallest pipe size or install intermediate supports for smaller diameter pipes as specified for individual pipe hangers.

I. Preformed Flashing-Sleeve and Flashing Pipe Portal Installation: Secure flashing sleeve to roof membrane according to flashing-sleeve manufacturer's written instructions; flash sleeve flange to surrounding roof membrane according to roof membrane manufacturer's instructions.

J. Seal joints with elastomeric or butyl sealant as required by roof accessory manufacturer.

3.3 REPAIR AND CLEANING

A. Galvanized Surfaces: Clean field welds, bolted connections, and abraded areas and repair galvanizing according to ASTM A780/A780M.

B. Touch up factory-primed surfaces with compatible primer ready for field painting according to Section 099113 "Exterior Painting."

C. Clean exposed surfaces according to manufacturer's written instructions.

D. Clean off excess sealants.

E. Replace roof accessories that have been damaged or that cannot be successfully repaired by finish touchup or similar minor repair procedures.

END OF SECTION 077200

SECTION 078100 - APPLIED FIREPROOFING

PART 1 - GENERAL

1.1 RELATED DOCUMENTS

A. Drawings and general provisions of the Contract, including General and Supplementary Conditions and Division 01 Specification Sections, apply to this Section.

1.2 SUMMARY

A. This Section includes the following:

1. Concealed SFRM.
2. Exposed SFRM.

B. Related Sections include the following:

1. Division 05 Section "Structural Steel Framing" for surface conditions required for structural steel receiving SFRM.
2. Division 07 Section "Thermal Insulation" for fire-safing insulation.
3. Division 07 Section "Board Fireproofing" for mineral-fiber-board fire protection.
4. Division 07 Section "Penetration Firestopping" for fire-resistance-rated firestopping systems.
5. Division 07 Section "Fire-Resistive Joint Systems" for fire-resistance-rated joint systems.

1.3 DEFINITIONS

A. SFRM: Sprayed fire-resistive material.

B. Concealed: Fire-resistive materials applied to surfaces that are concealed from view behind other construction when the Work is complete and have not been defined as exposed.

C. Exposed: Fire-resistive materials applied to surfaces that are exposed to view when the Work is completed.

1.4 SUBMITTALS

A. Product Data: For each type of product indicated.

B. Shop Drawings: Structural framing plans indicating the following:

1. Locations and types of surface preparations required before applying SFRM.
2. Extent of SFRM for each construction and fire-resistance rating, including the following:

    a. Applicable fire-resistance design designations of a qualified testing and inspecting agency acceptable to authorities having jurisdiction.

b. Minimum thicknesses needed to achieve required fire-resistance ratings of structural components and assemblies.

3. Treatment of SFRM after application.

C. Product Certificates: For each type of SFRM, signed by product manufacturer.

D. Qualification Data: For Installer, manufacturer, and testing agency.

E. Compatibility and Adhesion Test Reports: From SFRM manufacturer indicating the following:

1. Materials have been tested for bond with substrates.
2. Materials have been verified by SFRM manufacturer to be compatible with substrate primers and coatings.
3. Interpretation of test results and written recommendations for primers and substrate preparation needed for adhesion.

F. Product Test Reports: Based on evaluation of comprehensive tests performed by a qualified testing agency, for proposed SFRM.

G. Research/Evaluation Reports: For SFRM.

H. Field quality-control test reports.

I. Warranties: Special warranties specified in this Section.

1.5 QUALITY ASSURANCE

A. Installer Qualifications: A qualified installer approved by SFRM manufacturer to install manufacturer's products. A manufacturer's willingness to sell its SFRM to Contractor or to an installer engaged by Contractor does not in itself confer qualification on the buyer.

B. SFRM Testing: By a qualified testing and inspecting agency engaged by Contractor or manufacturer to test for compliance with specified requirements for performance and test methods.

1. SFRMs are randomly selected for testing from bags bearing the applicable classification marking of UL or another testing and inspecting agency acceptable to authorities having jurisdiction.
2. Testing is performed on specimens of SFRMs that comply with laboratory testing requirements specified in Part 2 and are otherwise identical to installed fire-resistive materials, including application of accelerant, sealers, topcoats, tamping, troweling, rolling, and water overspray, if any of these are used in final application.
3. Testing is performed on specimens whose application the independent testing and inspecting agency witnessed during preparation and conditioning. Include in test reports a full description of preparation and conditioning of laboratory test specimens.

C. Compatibility and Adhesion Testing: Engage a qualified testing and inspecting agency to test for compliance with requirements for specified performance and test methods.

1. Test for bond per ASTM E 736 and requirements in UL's "Fire Resistance Directory" for coating materials. Provide bond strength indicated in referenced fire-resistance design, but not less than minimum specified in Part 2.

2. Verify that manufacturer, through its own laboratory testing or field experience, has not found primers or coatings to be incompatible with SFRM.

D. Fire-Test-Response Characteristics: Where indicated, provide products identical to those tested for fire resistance per ASTM E 119 by a testing agency acceptable to authorities having jurisdiction.

1. Fire-Resistance Ratings: Indicated by design designations from UL's "Fire Resistance Directory" or from the listings of another testing and inspecting agency.
2. Identify products with appropriate markings of applicable testing and inspecting agency.

E. Provide products containing no detectable asbestos as determined according to the method specified in 40 CFR 763, Subpart E, Appendix E, Section 1, "Polarized Light Microscopy."

F. Preinstallation Conference: Conduct conference at Project site.

1.6 DELIVERY, STORAGE, AND HANDLING

A. Deliver products to Project site in original, unopened packages with intact and legible manufacturers' labels identifying product and manufacturer, date of manufacture, shelf life if applicable, and fire-resistance ratings applicable to Project.

B. Use materials with limited shelf life within period indicated. Remove from Project site and discard materials whose shelf life has expired.

C. Store materials inside, under cover, and aboveground; keep dry until ready for use. Remove from Project site and discard wet or deteriorated materials.

1.7 PROJECT CONDITIONS

A. Environmental Limitations: Do not apply SFRM when ambient or substrate temperature is 40 deg F (4 deg C) or lower unless temporary protection and heat are provided to maintain temperature at or above this level for 24 hours before, during, and for 24 hours after product application.

B. Ventilation: Ventilate building spaces during and after application of SFRM. Use natural means or, if they are inadequate, forced-air circulation until fire-resistive material dries thoroughly.

1.8 COORDINATION

A. Sequence and coordinate application of SFRM with other related work specified in other Sections to comply with the following requirements:

1. Provide temporary enclosure as required to confine spraying operations and protect the environment.
2. Provide temporary enclosures for applications to prevent deterioration of fire-resistive material due to exposure to weather and to unfavorable ambient conditions for humidity, temperature, and ventilation.
3. Avoid unnecessary exposure of fire-resistive material to abrasion and other damage likely to occur during construction operations subsequent to its application.
4. Do not apply fire-resistive material to metal roof deck substrates until concrete topping, if any, has been completed. For metal roof decks without concrete topping, do not apply

fire-resistive material to metal roof deck substrates until roofing has been completed; prohibit roof traffic during application and drying of fire-resistive material.

5. Do not apply fire-resistive material to metal floor deck substrates until concrete topping has been completed.
6. Do not begin applying fire-resistive material until clips, hangers, supports, sleeves, and other items penetrating fire protection are in place.
7. Defer installing ducts, piping, and other items that would interfere with applying fire-resistive material until application of fire protection is completed.
8. Do not install enclosing or concealing construction until after fire-resistive material has been applied, inspected, and tested and corrections have been made to defective applications.

1.9 WARRANTY

A. Special Warranty: Manufacturer's standard form, signed by Contractor and by Installer, in which manufacturer agrees to repair or replace SFRMs that fail in materials or workmanship within specified warranty period.

1. Failures include, but are not limited to, the following:

a. Cracking, flaking, spalling, or eroding in excess of specified requirements; peeling; or delaminating of SFRM from substrates.
b. Not covered under the warranty are failures due to damage by occupants and Owner's maintenance personnel, exposure to environmental conditions other than those investigated and approved during fire-response testing, and other causes not reasonably foreseeable under conditions of normal use.

2. Warranty Period: Two years from date of Substantial Completion.

PART 2 - PRODUCTS

2.1 CONCEALED SFRM

A. Available Products: Subject to compliance with requirements, products that may be incorporated into the Work include, but are not limited to, the following:

B. Products: Subject to compliance with requirements, provide one of the following:

1. Concealed Cementitious SFRM:

a. Carboline Co., Fireproofing Products Div.; Pyrolite 15 High Yield.
b. Grace, W. R. & Co. - Conn., Construction Products Div.; Monokote TypeMK-6
c. Southwest Vermiculite Co., Inc.; Type 5GP.

C. Material Composition: Manufacturer's standard product, as follows:

1. Concealed Cementitious SFRM: Factory-mixed, dry formulation of gypsum or portland cement binders, additives, and lightweight mineral or synthetic aggregates mixed with water at Project site to form a slurry or mortar for conveyance and application.

D. Physical Properties: Minimum values, unless otherwise indicated, or higher values required to attain designated fire-resistance ratings, measured per standard test methods referenced with each property as follows:

1. Dry Density: 15 lb/cu. ft. (240 kg/cu. m for average and individual densities, or greater if required to attain fire-resistance ratings indicated, per ASTM E 605 or AWCI Technical Manual 12-A, Section 5.4.5, "Displacement Method."
2. Thickness: Minimum average thickness required for fire-resistance design indicated according to the following criteria, but not less than 0.375 inch (9 mm), per ASTM E 605:

   a. Where the referenced fire-resistance design lists a thickness of 1 inch (25 mm) or more, the minimum allowable individual thickness of SFRM is the design thickness minus 0.25 inch (6 mm).
   b. Where the referenced fire-resistance design lists a thickness of less than 1 inch (25 mm) but more than 0.375 inch (9 mm), the minimum allowable individual thickness of SFRM is the greater of 0.375 inch (9 mm) or 75 percent of the design thickness.
   c. No reduction in average thickness is permitted for those fire-resistance designs whose fire-resistance ratings were established at densities of less than 15 lb/cu. ft. (240 kg/cu. m).

3. Bond Strength: 150 lbf/sq. ft. (7.2 kPa minimum per ASTM E 736 based on laboratory testing of 0.75-inch (19-mm) minimum thickness of SFRM.
4. Compressive Strength: 5.21 lbf/sq. in. (35.9 kPa minimum per ASTM E 761. Minimum thickness of SFRM tested shall be 0.75 inch (19 mm) and minimum dry density shall be as specified but not less than 15 lb/cu. ft. (240 kg/cu. m).
5. Corrosion Resistance: No evidence of corrosion per ASTM E 937.
6. Deflection: No cracking, spalling, or delamination per ASTM E 759.
7. Effect of Impact on Bonding: No cracking, spalling, or delamination per ASTM E 760.
8. Air Erosion: Maximum weight loss of 0.025 g/sq. ft. (0.270 g/sq. m in 24 hours per ASTM E 859. For laboratory tests, minimum thickness of SFRM is 0.75 inch (19 mm), maximum dry density is 15 lb/cu. ft. (240 kg/cu. m), test specimens are not prepurged by mechanically induced air velocities, and tests are terminated after 24 hours.
9. Fire-Test-Response Characteristics: Provide SFRM with the following surface-burning characteristics as determined by testing identical products per ASTM E 84 by UL or another testing and inspecting agency acceptable to authorities having jurisdiction:

   a. Flame-Spread Index: 10 or less.
   b. Smoke-Developed Index: 0.

10. Fungal Resistance: No observed growth on specimens per ASTM G 21.

2.2 EXPOSED SFRM

A. Available Products: Subject to compliance with requirements, products that may be incorporated into the Work include, but are not limited to, the following:

B. Products: Subject to compliance with requirements, provide one of the following:

1. Exposed Cementitious SFRM:

   a. Carboline Co., Fireproofing Products Div.; Pyrolite 22.
   b. Carboline Co., Fireproofing Products Div.; Pyrocrete 239.
   c. Carboline Co., Fireproofing Products Div.; Pyrocrete 40.

d. Carboline Co., Fireproofing Products Div.; Pyrocrete 240 High Yield.
e. Carboline Co., Fireproofing Products Div.; Pyrocrete 241.
f. Grace, W.R. & Co. - Conn., Construction Products Div.; Monokote Type Z106G.
g. Grace, W.R. & Co. - Conn., Construction Products Div.; Monokote Type Z106.
h. Grace, W.R. & Co. - Conn., Construction Products Div.; Monokote Type Z106/HY.
i. Grace, W.R. & Co. - Conn., Construction Products Div.; Monokote Type Z146.
j. Isolatek International Corp.; Cafco 400.
k. Isolatek International Corp.; Fendolite M-II.
l. Pyrok, Inc.; Pyrok-HD.
m. Pyrok, Inc.; Pyrok-MD.
n. Southwest Vermiculite Co., Inc.; 5MD.
o. Southwest Vermiculite Co., Inc.; 7GP.
p. Southwest Vermiculite Co., Inc.; 1XR.

C. Material Composition: Manufacturer's standard product, as follows:

1. Exposed Cementitious SFRM: Factory-mixed, dry, cement aggregate formulation; or chloride-free formulation of gypsum or portland cement binders, additives, and inorganic aggregates mixed with water at Project site to form a slurry or mortar for conveyance and application.

D. Physical Properties: Minimum values, unless otherwise indicated, or higher values required to attain designated fire-resistance ratings, measured per standard test methods referenced with each property as follows:

1. Dry Density: Values for average and individual densities as required for fire-resistance ratings indicated, per ASTM E 605 or AWCI Technical Manual 12-A, Section 5.4.5, "Displacement Method," but with an average density of not less than 22 lb/cu. ft. (352 kg/cu. m).
2. Bond Strength: 434 lbf/sq. ft. (21 kPa) minimum per ASTM E 736.
3. Compressive Strength: 51 lbf/sq. in. (351 kPa) <Dry Density: Values for average and individual densities as required for fire-resistance ratings indicated, per ASTM E 605 or AWCI Technical Manual 12-A, Section 5.4.5, "Displacement Method," but with an average density of not less than 39 lb/cu. ft. (625 kg/cu. m).
5. Bond Strength: 1000 lbf/sq. ft. (48 kPa)] minimum per ASTM E 736.
6. Compressive Strength: 300 lbf/sq. in. (2067 kPa) minimum per ASTM E 761.
7. Corrosion Resistance: No evidence of corrosion per ASTM E 937.
8. Deflection: No cracking, spalling, or delamination per ASTM E 759.
9. Effect of Impact on Bonding: No cracking, spalling, or delamination per ASTM E 760.
10. Air Erosion: Maximum weight loss of 0.025 g/sq. ft. (0.270 g/sq. m per ASTM E 859.
11. Combustion Characteristics: Passes ASTM E 136.
12. Fire-Test-Response Characteristics: Provide SFRM with the following surface-burning characteristics as determined by testing identical products per ASTM E 84 by UL or another testing and inspecting agency acceptable to authorities having jurisdiction:

    a. Flame-Spread Index: 10 or less
    b. Smoke-Developed Index: [0]

13. Fungal Resistance: No observed growth on specimens per ASTM G 21.
14. For exterior applications of SFRM, provide formulation listed and labeled by testing and inspecting agency acceptable to authorities having jurisdiction for surfaces exposed to exterior.

2.3 AUXILIARY FIRE-RESISTIVE MATERIALS

A. General: Provide auxiliary fire-resistive materials that are compatible with SFRM and substrates and are approved by UL or another testing and inspecting agency acceptable to authorities having jurisdiction for use in fire-resistance designs indicated.

B. Substrate Primers: For use on each substrate and with each sprayed fire-resistive product, provide primer that complies with one or more of the following requirements:

1. Primer's bond strength complies with requirements specified in UL's "Fire Resistance Directory" for coating materials based on a series of bond tests per ASTM E 736.
2. Primer is identical to those used in assemblies tested for fire-test-response characteristics of SFRM per ASTM E 119 by UL or another testing and inspecting agency acceptable to authorities having jurisdiction.

C. Adhesive for Bonding Fire-Resistive Material: Product approved by manufacturer of SFRM.

D. Metal Lath: Expanded metal lath fabricated from material of weight, configuration, and finish required to comply with fire-resistance designs indicated and fire-resistive material manufacturer's written recommendations. Include clips, lathing accessories, corner beads, and other anchorage devices required to attach lath to substrates and to receive SFRM.

E. Reinforcing Fabric: Glass- or carbon-fiber fabric of type, weight, and form required to comply with fire-resistance designs indicated; approved and provided by manufacturer of SFRM.

F. Reinforcing Mesh: Metallic mesh reinforcement of type, weight, and form required to comply with fire-resistance designs indicated; approved and provided by manufacturer of intumescent mastic coating fire-resistive material. Include pins and attachment.

G. Sealer for Sprayed-Fiber Fire-Resistive Material: Transparent-drying, water-dispersible, tinted protective coating recommended in writing by manufacturer of sprayed-fiber fire-resistive material.

1. Product: Subject to compliance with requirements, provide "Cafco Bond-Seal" by Isolatek International Corp.

H. Topcoat: Type recommended in writing by manufacturer of each SFRM for application over concealed] and exposed SFRM.

I. Cement-Based Topcoat: Factory-mixed, cementitious hard coat formulation recommended in writing by manufacturer of SFRM for trowel or spray application over concealed and exposed SFRM.

1. Product: Subject to compliance with requirements, provide "Hardcoat 4500" by Carboline Co.; Fireproofing Products Div. OR "Cafco 800" by Isolatek International Corp. or equal.

J. Veneer-Plaster Topcoat: Factory-mixed formulation of a latex-modified, portland cement-based veneer plaster recommended in writing by manufacturer of SFRM for trowel or spray application over concealed and exposed SFRM.

1. Product: Subject to compliance with requirements, provide "Topkrete Type TK-610L" by Grace, W. R. & Co.--Conn.; Construction Products Div.

K. Water-Based Permeable Topcoat: Factory-mixed formulation recommended in writing by manufacturer of SFRM for brush, roller, or spray application over concealed and exposed SFRM. Provide application at a rate of mfg. standard.

1. Product: Subject to compliance with requirements, provide "Cafco Topcoat" by Isolatek International Corp.

PART 3 - EXECUTION

3.1 EXAMINATION

A. Examine substrates, areas, and conditions, with Installer present, for compliance with requirements for substrates and other conditions affecting performance of work. A substrate is in satisfactory condition if it complies with the following:

1. Substrates comply with requirements in the Section where the substrate and related materials and construction are specified.
2. Substrates are free of dirt, oil, grease, release agents, rolling compounds, mill scale, loose scale, incompatible primers, incompatible paints, incompatible encapsulants, or other foreign substances capable of impairing bond of fire-resistive materials with substrates under conditions of normal use or fire exposure.
3. Objects penetrating fire-resistive material, including clips, hangers, support sleeves, and similar items, are securely attached to substrates.
4. Substrates are not obstructed by ducts, piping, equipment, and other suspended construction that will interfere with applying fire-resistive material.

B. Verify that concrete work on steel deck has been completed.

C. Verify that roof construction, installation of roof-top HVAC equipment, and other related work are completed.

D. Conduct tests according to fire-resistive material manufacturer's written recommendations to verify that substrates are free of substances capable of interfering with bond.

E. Proceed with installation only after unsatisfactory conditions have been corrected.

3.2 PREPARATION

A. Cover other work subject to damage from fallout or overspray of fire-resistive materials during application.

B. Clean substrates of substances that could impair bond of fire-resistive material, including dirt, oil, grease, release agents, rolling compounds, mill scale, loose scale, and incompatible primers, paints, and encapsulants.

C. Prime substrates where recommended in writing by SFRM manufacturer unless compatible shop primer has been applied and is in satisfactory condition to receive SFRM.

D. For exposed applications, repair substrates to remove surface imperfections that could affect uniformity of texture and thickness in finished surface of SFRM. Remove minor projections and fill voids that would telegraph through fire-resistive products after application.

3.3 APPLICATION, GENERAL

A. Comply with fire-resistive material manufacturer's written instructions for mixing materials, application procedures, and types of equipment used to mix, convey, and spray on fire-resistive material, as applicable to particular conditions of installation and as required to achieve fire-resistance ratings indicated.

B. Apply SFRM that is identical to products tested as specified in Part 1 "Quality Assurance" Article and substantiated by test reports, with respect to rate of application, accelerator use, sealers, topcoats, tamping, troweling, water overspray, or other materials and procedures affecting test results.

C. Install reinforcing fabric, as required, to comply with fire-resistance ratings and fire-resistive material manufacturer's written recommendations for conditions of exposure and intended use. Securely attach fabric to substrate in position required for support and reinforcement of fire-resistive material. Use anchorage devices of type recommended in writing by SFRM manufacturer. Attach accessories where indicated or required for secure attachment of fabric to substrate.

D. Coat substrates with bonding adhesive before applying fire-resistive material where required to achieve fire-resistance rating or as recommended in writing by SFRM manufacturer for material and application indicated.

E. Extend fire-resistive material in full thickness over entire area of each substrate to be protected. Unless otherwise recommended in writing by SFRM manufacturer, install body of fire-resistive covering in a single course.

F. Spray apply fire-resistive materials to maximum extent possible. Following the spraying operation in each area, complete the coverage by trowel application or other placement method recommended in writing by SFRM manufacturer.

G. For applications over encapsulant materials, including lockdown (post-removal) encapsulants, apply SFRM that differs in color from that of encapsulant over which it is applied.

H. Where sealers are used, apply products that are tinted to differentiate them from SFRM over which they are applied.

3.4 APPLICATION, CONCEALED SFRM

A. Apply concealed SFRM in thicknesses and densities not less than those required to achieve fire-resistance ratings designated for each condition, but apply in greater thicknesses and densities if specified in Part 2 "Concealed SFRM" Article.

B. Apply water overspray to concealed sprayed-fiber fire-resistive material as required to obtain designated fire-resistance rating and where indicated.

C. Cure concealed SFRM according to product manufacturer's written recommendations.

3.5 APPLICATION, EXPOSED SFRM

A. Apply exposed SFRM in thicknesses and densities not less than those required to achieve fire-resistance ratings designated for each condition, but apply in greater thicknesses and densities if indicated.

1. For steel beams and bracing, provide a thickness of not less than 1 inch (25 mm).
2. For metal floor or roof decks, provide a thickness of not less than 1/2 inch (13 mm).

B. Provide a uniform finish complying with description indicated for each type of material and matching Architect's sample or, if none, finish approved for field-erected mockup.

C. Apply exposed cementitious SFRM to produce the following finish:

1. Spray-textured finish with no further treatment.
2. Even, spray-textured finish, produced by rolling flat surfaces of fire-protected members with a damp paint roller to remove drippings and excessive roughness.
3. Skip-troweled finish with leveled surface, smoothed-out texture, and neat edges.
4. Smooth, troweled finish with surface markings eliminated and edges squared.

D. Apply exposed sprayed-fiber fire-resistive material to produce the following finish:

1. Spray-textured finish.

E. Cure exposed SFRM according to product manufacturer's written recommendations.

3.6 FIELD QUALITY CONTROL

A. Testing Agency: Owner will engage a qualified testing agency to perform tests and inspections and prepare test reports.

1. Testing and inspecting agency will interpret tests and state in each report whether tested work complies with or deviates from requirements.

B. Tests and Inspections: Testing and inspecting of completed applications of SFRM shall take place in successive stages, in areas of extent and using methods as follows. Do not proceed with application of SFRM for the next area until test results for previously completed applications of SFRM show compliance with requirements. Tested values must equal or exceed values indicated and required for approved fire-resistance design.

1. Thickness for Floor, Roof, and Wall Assemblies: For each 1000-sq. ft. (93-sq. m) area, or partial area, on each floor, from the average of 4 measurements from a 144-sq. in. (0.093-sq. m) sample area, with sample width of not less than 6 inches (152 mm) per ASTM E 605.
2. Thickness for Structural Frame Members: From a sample of 25 percent of structural members per floor, taking 9 measurements at a single cross section for structural frame beams or girders, 7 measurements of a single cross section for joists and trusses, and 12 measurements of a single cross section for columns per ASTM E 605.
3. Density for Floors, Roofs, Walls, and Structural Frame Members: At frequency and from sample size indicated for determining thickness of each type of construction and structural framing member, per ASTM E 605 or AWCI Technical Manual 12-A, Section 5.4.5, "Displacement Method."
4. Bond Strength for Floors, Roofs, Walls, and Structural Framing Members: For each 10,000-sq. ft. (929 sq. m) area, or partial area, on each floor, cohesion and adhesion from one sample of size indicated for determining thickness of each type of construction and structural framing member, per ASTM E 736.

    a. Field test SFRM that is applied to flanges of wide-flange, structural-steel members on surfaces matching those that will exist for remainder of steel receiving fire-resistive material.

b. If surfaces of structural steel receiving SFRM are primed or otherwise painted for coating materials, perform series of bond tests specified in UL's "Fire Resistance Directory." Provide bond strength indicated in referenced UL fire-resistance criteria, but not less than 150 lbf/sq. ft. (7.2 kPa) minimum per ASTM E 736.

5. If testing finds applications of SFRM are not in compliance with requirements, testing and inspecting agency will perform additional random testing to determine extent of noncompliance.

C. Remove and replace applications of SFRM that do not pass tests and inspections for cohesion and adhesion, for density, or for both and retest as specified above.

D. Apply additional SFRM, per manufacturer's written instructions, where test results indicate that thickness does not comply with specified requirements, and retest as specified above.

3.7 CLEANING, PROTECTING, AND REPAIR

A. Cleaning: Immediately after completing spraying operations in each containable area of Project, remove material overspray and fallout from surfaces of other construction and clean exposed surfaces to remove evidence of soiling.

B. Protect SFRM, according to advice of product manufacturer and Installer, from damage resulting from construction operations or other causes so fire protection will be without damage or deterioration at time of Substantial Completion.

C. Coordinate application of SFRM with other construction to minimize need to cut or remove fire protection. As installation of other construction proceeds, inspect SFRM and patch any damaged or removed areas.

D. Repair or replace work that has not successfully protected steel.

END OF SECTION 078100

SECTION 078413 - PENETRATION FIRESTOPPING

PART 1 - GENERAL

1.01 SUMMARY

A. This Section includes through-penetration firestop systems for the following types of fire-resistance-rated assemblies:

1. Floors
2. Walls

B. Related Requirements:
1. Section 017300 – Execution: Requirements for cutting, patching, and restoring fire-rated assemblies.
2. Section 019900 – Closeout Requirements (or 017800 if applicable): Record documentation for fire-resistance-rated assemblies.
3. Section 033000 – Cast-in-Place Concrete: For concrete substrates receiving firestopping.
4. Section 042000 – Unit Masonry: Masonry wall assemblies requiring firestop penetrations.
5. Section 051200 – Structural Steel Framing: Conditions affecting penetrations through steel-frame fire-rated assemblies.
6. Section 061000 – Rough Carpentry: Wood framing interfaces at fire-resistance-rated wall penetrations.
7. Section 072100 – Thermal Insulation: Fire-safing insulation used as backing materials where part of tested systems.
8. Section 078100 – Applied Fireproofing: Coordination at locations where penetrations pass through fireproofed steel.
9. Section 078400 – Fire-Resistive Joint Systems (if used on this project): Perimeter joints and head-of-wall systems adjacent to penetrations.
10. Section 079200 – Joint Sealants: Non-fire-resistance-rated sealants in visible locations, distinguished from firestopping.
11. Divisions 21, 22, 23 – Fire Protection, Plumbing, and HVAC: Penetrations created by mechanical, plumbing, and fire suppression systems.
12. Division 26 – Electrical: Conduit, cable tray, and communication system penetrations requiring firestopping.

1.02 PERFORMANCE REQUIREMENTS

A. F-Ratings: Provide through-penetration firestop systems with F-ratings equaling or exceeding the fire-resistance rating of the construction penetrated, when tested in accordance with ASTM E814 / UL 1479 (and CAN/ULC-S115 where applicable).

B. T-Ratings: Where required by code or indicated on Drawings, provide through-penetration firestop systems with T-ratings, in addition to F-ratings, determined in accordance with ASTM E814 / UL 1479, for penetrations with potential for heat transfer to adjacent materials in occupiable areas, including but not limited to:

1. Penetrations located outside wall cavities or fire-resistance-rated shaft enclosures.
2. Penetrations located in construction containing fire-protection-rated openings..

3. Penetrating items larger than 4-inch diameter nominal pipe or 16 sq. in. in overall cross-sectional area.
4. Penetrating items larger than 4-inch- diameter nominal pipe or 16 sq. in. in overall cross-sectional area.

C. For firestop systems exposed to view, traffic, moisture, and physical damage, provide products that after curing do not deteriorate when exposed to these conditions both during and after construction.

1. For floor penetrations with annular spaces exceeding 4 inches in width and exposed to possible loading and traffic, provide firestop systems capable of supporting floor loads involved either by installing floor plates or by other means.
2. For penetrations involving insulated piping, provide firestop systems not requiring removal of insulation.

D. For through-penetration firestop systems exposed to view, provide products with flame-spread indices of less than 25 and smoke-developed indices of less than 450, when tested per ASTM E 84.

1.03 SUBMITTALS

A. Product Data: For each product indicated.

B. Shop Drawings: Include details of each proposed firestop condition and the design designation of the testing and inspecting agency (e.g., UL system number) evidencing compliance with requirements for each condition indicated. Identify construction type, hourly rating, penetrating item, annular space, and all related components (sleeves, insulation, collars, and sealants).

C. Product certificates.

1.04 QUALITY ASSURANCE

A. Fire-Test-Response Characteristics: Provide rated systems identical to those tested per ASTM E 814 and with products bearing the classification marking of a qualified testing and inspecting agency acceptable to authorities having jurisdiction.

B. Coordinate sizing of sleeves, openings, core-drilled holes, or cut openings to accommodate firestop systems.

C. Installer Qualifications: Firm experienced in installing through-penetration firestop systems similar in material, design, and extent to those required for this Project, and approved in writing by firestop system manufacturer as an authorized installer.

D. D. Listed Systems: Provide through-penetration firestop systems that are UL-classified or listed by another qualified testing and inspecting agency acceptable to authorities having jurisdiction, and installed to match the tested assembly, including annular space, penetrating item type and size, insulation type and thickness, and sleeve or raceway configuration.

PART 2 - PRODUCTS

2.01 MANUFACTURERS

A. Compatibility and Single Source: Provide complete, tested through-penetration firestop systems from a single manufacturer for each penetration type, including fill materials and required accessories. Systems shall be compatible with substrates forming openings and with penetrating items under conditions of service and application, as demonstrated by manufacturer testing and field experience.

2.02 FIRESTOP SYSTEMS

A. Compatibility: Provide firestop systems that are compatible with the substrates forming openings, and with the items, if any, penetrating firestop systems, under conditions of service and application, as demonstrated by manufacturer based on testing and field experience.

B. Accessories: Provide accessories required to install fill materials that comply with requirements of tested assemblies, are approved by qualified testing and inspecting agency that performed testing, and are specified by manufacturer of tested assemblies. Accessories include, but are not limited to, the following:
1. Permanent forming/damming/backing materials.
   a. Slag- or rock-wool-fiber insulation.
   b. Sealants used in combination with other forming/damming/backing materials to prevent leakage of fill materials in liquid state.
   c. Fire-rated form board.
   d. Fillers for sealants.
2. Temporary forming materials.
3. Substrate primers.
4. Collars.
5. Steel sleeves.

PART 3 - EXECUTION

3.01 INSTALLATION

A. General: Install through-penetration firestop systems to comply with Article "Performance Requirements" and with firestop system manufacturer's written installation instructions and published drawings for the specific tested system design indicated (including construction type, hourly rating, annular space, sleeve condition, insulation, and penetrating item type and size).

B. Clean openings immediately before installing firestop systems.

1. Remove foreign materials that could interfere with adhesion of firestop systems.
2. Remove laitance and form-release agents from concrete.
3. Produce clean, sound surfaces capable of developing optimum bond with firestop systems. Remove loose particles remaining from cleaning operation.

C. Priming: Prime substrates when recommended in writing by firestop system manufacturer using that manufacturer's recommended products and methods. Confine primers to areas of bond; do not spill primers or allow them to migrate onto adjoining surfaces.

D. Masking Tape: Use masking tape where required to prevent contact of firestopping with adjoining surfaces that otherwise would be permanently stained or damaged by such contact or by cleaning methods required to remove firestopping smears. Remove tape immediately after installation without disturbing firestopping seal.

E. Accessories: Install accessories of types required to support fill materials during their application and in the position necessary to produce cross-sectional shapes and depths required to achieve fire ratings indicated.

1. After installing fill materials, remove combustible forming materials and other accessories that are not permanent components of firestop systems.

F. Install fill materials for firestop systems by proven techniques.

1. Fill voids and cavities formed by openings, forming materials, accessories, and penetrating items as required to achieve fire-resistance ratings indicated.
2. Apply materials so they contact and adhere to substrates formed by openings and penetrating items.
3. For fill materials that will remain exposed after completing Work, finish to produce smooth, uniform surfaces that are flush with adjoining finishes.

G. Clean excess fill materials adjacent to openings as installation progresses by methods and with cleaning materials that are approved in writing by manufacturers and that do not damage materials in which openings occur.

H. Do not mix firestop system components from different manufacturers in the same penetration unless specifically tested and listed for use together.

3.02 THROUGH-PENETRATION FIRESTOP SYSTEM SCHEDULE

A. Firestop Systems for Metallic Pipes, Conduit, or Tubing:

1. Provide complete through-penetration firestop systems and devices with F- and, where required, T-ratings not less than the fire-resistance rating of the assembly being penetrated, tested in accordance with ASTM E814 / UL 1479.

B. Firestop Systems for Nonmetallic Pipes and Conduit:
1. Provide complete through-penetration firestop systems and devices tested in accordance with ASTM E814 / UL 1479 for the specific nonmetallic material, pipe size, and schedule, with F- and T-ratings as required to match the assembly.

C. Firestop Systems for Electrical Cable, Cable Trays, and Raceway Penetrations:
1. Provide complete through-penetration firestop systems tested in accordance with ASTM E814 / UL 1479 for grouped cables, cable trays, or raceways, including provisions for future cable additions where required.

END OF SECTION 078413

SECTION 079010 - PRE-COMPRESSED SEAL EXPANSION JOINT

PART 1 - GENERAL

1.1 Work Included

A. The work shall consist of furnishing and installing waterproof expansion joints in accordance with the details shown on the plans and the requirements of the specifications. Preformed sealant shall be silicone pre-coated, preformed, pre-compressed, self-expanding, sealant system.

1.2 Submittals

A. General – Submit the following according to Division 1.

B. Standard Submittal Package – Submit typical expansion joint drawing(s) indicating pertinent dimensions, general construction, expansion joint opening dimensions and product information.

C. Sample of material is required at time of submittal.

D. All products must be certified by independent laboratory test report to exceed the requirements of curtain wall performance tests ASTM E330, E283-04, and E331. Product must meet or exceed hurricane-force wind loading with no deflection at both positive and negative pressures up to 4954 Pascals - equal to 200 mph winds (ASTM E330-02-procedure A).

E. All products must be certified by independent laboratory test report to ASTM E90-09 and to meet or exceed an STC 52 in STC 56 wall and OITC 38 rating in an OITC 38 wall.

F. All products must be certified by independent laboratory test report to be free in composition of any waxes or wax compounds using FTIR and DSC testing.

G. All products shall be certified in writing to be: a) capable of withstanding 150°F (65°C) for 3 hours while compressed down to the minimum of movement capability dimension of the basis of design product (-50% of nominal material size) without evidence of any bleeding of impregnation medium from the material; and b) that the same material after the heat stability test and after first being cooled to room temperature will subsequently self-expand to the maximum of movement capability dimension of the basis-of-design product (+50% of nominal material size) within 24 hours at room temperature 68°F (20°C).

H. Quality and Environmental control: Manufacturer shall be certified to both ISO-9001:2015 (quality management) and ISO-14001:2015 (environmental management), and shall provide written confirmation that formal Quality and Environmental management systems and processes have been adopted.

I. Product Delivery, Storage and Handling:

1. Deliver products to site in Manufacturer's original, intact, labeled containers. Handle and protect as necessary to prevent damage or deterioration during shipment, handling and storage. Store in accordance with manufacturer's installation instructions.

1.3 Manufacturers: Subject to compliance with all requirements, provide products by one of the following:

A. Interior and Exterior, Thermal, Waterproof, Weather Resistant, Fire Rated:

1. Basis of Design: InPro Corp. - 1100 Series Foam Seals
2. EMSEAL Joint Systems, LTD
3. Or Approved Equal.

1.4 Quality Assurance

A. The General Contractor will conduct a pre-construction meeting with all parties and trades involved in the treatment of work at and around expansion joints including, but not limited to, concrete, mechanical, electrical, HVAC, landscaping, masonry, curtain wall, waterproofing, fire-stopping, caulking, flooring and other finish trade subcontractors. All superintendents and foremen with responsibility for oversight and setting of the joint gap must attend this meeting. The General Contractor is responsible to coordinate and schedule all trades and ensure that all subcontractors understand their responsibilities in relation to expansion joints and that their work cannot impede anticipated structural movement at the expansion joints, or compromise the achievement of watertighness or life safety at expansion joints in any way.

B. Warranty – Manufacturer's standard warranty shall apply.

PART 2 - PRODUCT

2.1 General

A. Provide watertight, energy-efficient exterior joints in vertical-plane walls (above-grade). Typical locations include but are not limited to the following: applications in window perimeters, other façade penetrations such as doors, store fronts, vents, HVAC units, panel to panel joints, curtain walls, control joints, between dissimilar materials, high-movement and seismic structural expansion joints, acoustic partition barriers, and new-to-existing connections.

B. Provide foam seals as indicated on drawings for interior and exterior vertical expansion joint locations.

C. Preformed sealant shall be silicone pre-coated, preformed, pre-compressed, self-expanding, sealant system. Expanding foam to be cellular foam impregnated with a water-based, non-drying, 100% acrylic dispersion. Seal shall combine factory-applied, low-modulus silicone and a backing of acrylic-impregnated expanding foam into a unified hybrid sealant system.

D. Material shall be capable of movements of +50%, -50% (100% total) of nominal material size.

E. Silicone external color facing to be factory-applied to the foam while it is partially pre-compressed to a width greater than maximum joint extension and cured before final compression. When compressed to final supplied dimension, a bellow(s) to handle movement must be created in the silicone coating. Silicone coating to be available in a range of not less than 26 standard colors for coordination with typical building materials.

F. Select the sealant system model appropriate to the movement and design requirements at each joint location that meet the project specification or as defined by the Design Consultant.

G. Manufacturer's Checklist must be completed by expansion joint subcontractor and returned to manufacturer at time of ordering material.

2.2 Performance Characteristics

A. Horizontal or Vertical Closed Cell Waterproof Foam:
1. Standard Joint range applications 2-18.
2. Joint operating range 50%+- of total nominal joint width.
3. Pre-formed, closed cell, crosslinked EVA copolymer polyethylene material. Low density, impermeable, ethylene vinyl acetate or nitrogen blown polyethylene foam installed in compression. Fastened with 2 part epoxy.
4. Tensile Strength: ASTM D3575 - 120 PSI
5. Resistance to UV & Moisture: DIN 18 542 - Meets
6. Density: ASTM D3575 - 3.0 PCF
7. Compressive Strength: ASTM D3575 - 15 pdf @ 50%
8. Compression Set: ASTM D3575 - <.03 PSF
9. Heat welded miters and seams required for monolithic water protection.

2.3 Fabrication

A. Foam seals must be supplied precompressed to less than the joint size, packaged in shrink-wrapped lengths (sticks) with a mounting adhesive on one face.

B. Directional changes and terminations into horizontal plane surfaces to be provided by factory-manufactured universal-90-degree single units containing minimum 12-inch long leg and 6-inch long leg or custom leg on each side of the direction change or through field fabrication in strict accordance with installation instructions.

PART 3 - EXECUTION

3.1 Installation

A. Preparation of the Work Area

1. The contractor shall provide a properly formed and prepared expansion joint openings constructed to the exact dimensions and elevations shown on manufacturer's standard system drawings or as shown on the contract drawings. Deviations from these dimensions will not be allowed without the written consent of the Design Consultant.
2. The contractor shall clean the joint opening of all contaminants immediately prior to installation of expansion joint system. Repair spalled, irregular or unsound joint surfaces using accepted industry practices for repair of the substrates in question. Remove protruding roughness to ensure joint sides are smooth. Ensure that there is sufficient depth to receive the full depth of the size of the seal being installed plus at least ¼-inch (6mm) for the application of corner beads. Refer to Manufacturers Installation Guide for detailed step-by-step instructions.
3. No drilling, or screwing, or fasteners of any type are permitted to anchor the sealant system into the substrate.

B. Pre-compressed seal/expansion joint shall be installed continuous within the vertical joint between the new addition and the face of the existing masonry building. The expansion joint material shall expand and follow the profile of the existing masonry on both sides of the addition (see elevations and plans). The expansion joint material shall also be installed between the two (2) new valleys of the proposed shingle roof and the decking of the existing roof.

3.2 Clean and Protect

A. Protect the system and its components during construction. Subsequent damage to the expansion joint system will be repaired at the general contractor's expense. After work is complete, clean exposed surfaces with a suitable cleaner that will not harm or attack the finish.

END OF SECTION 079010

SECTION 079200 - JOINT SEALANTS

PART 1 - GENERAL

1.1 SUMMARY

A. Section Includes:

1. Silicone joint sealants (exterior).
2. Latex joint sealants (interiors).

B. Related Requirements:

1. Section 079219 "Acoustical Joint Sealants" for sealing joints in sound-rated construction.

1.2 REFERENCES

A. ASTM C920 – Elastomeric Joint Sealants

B. ASTM C834 – Latex Sealants

C. ASTM C1193 – Guide for Use of Joint Sealants

D. ASTM C1248 – Staining of Porous Substrates by Sealants

E. ASTM C1521 – Adhesion of Sealants Using Field-Applied Materials

F. SWRI Sealant and Waterproofing Manual

1.3 SUBMITTALS

A. Product Data

1. Submit manufacturer's technical data for each joint sealant, primer, backing, and accessory, including performance characteristics and installation instructions.

B. Samples

1. Submit color samples for each exposed sealant for Architect's selection.

C. Compatibility and Adhesion Testing

1. Submit written documentation from sealant manufacturer indicating compatibility of sealant with adjacent materials and substrates.
2. Submit adhesion test reports where required.

D. Qualification Data

1. Submit documentation demonstrating installer qualifications and manufacturer qualifications.

E. Warranty

1. Submit manufacturer's standard warranty and installer warranty.

1.4 QUALITY ASSURANCE

A. Installer Qualifications

1. Installer shall have minimum 5 years documented experience installing joint sealants of similar scope and complexity.

B. Manufacturer Qualifications

1. Sealant manufacturer shall have minimum 10 years experience producing specified products.

C. Mockups

1. Provide sealant mockups as part of adjacent construction mockups where sealants are visible or critical to performance, as directed by Architect.

D. Preinstallation Meeting

1. Conduct meeting with Architect, Construction Manager, and Installer to review joint preparation, substrate conditions, sealant types, and installation procedures.

E. Field Adhesion Testing

1. Perform field adhesion testing in accordance with ASTM C1521 at locations selected by Architect.
2. Remove and replace sealant that does not meet adhesion requirements.

1.5 DELIVERY, STORAGE, AND HANDLING

A. Deliver materials in original, unopened containers with manufacturer's labels intact.

B. Store materials in a clean, dry location in accordance with manufacturer's instructions.

C. Protect materials from freezing, overheating, and contamination.

1.6 PROJECT CONDITIONS

A. Environmental Conditions

1. Do not install sealants when ambient or substrate temperatures are outside manufacturer's recommended limits.

B. Substrate Conditions

1. Do not proceed with sealant installation until unsatisfactory conditions have been corrected.

C. Coordination

1. Coordinate sealant installation with adjacent work to ensure proper sequencing and joint accessibility.

1.7 WARRANTY

A. Manufacturer's Warranty

1. Provide manufacturer's standard warranty for sealant materials.

B. Installer Warranty

1. Installer shall warrant sealant installation against failure including loss of adhesion, cohesion, and watertightness for a period of not less than 2 years from Substantial Completion.

PART 2 - PRODUCTS

2.1 JOINT SEALANTS, GENERAL

A. Compatibility

1. Provide sealants, primers, backings, and accessories that are compatible with one another and with substrates under conditions of service and application, as demonstrated by manufacturer testing and field experience.

B. Colors

1. Color of exposed sealants as selected by Architect from manufacturer's full range.

C. Performance Requirements

1. Sealants shall be capable of withstanding movement, weather exposure, and service conditions without loss of adhesion or cohesion.

D. VOC Content

1. Sealants shall comply with applicable local and regional VOC regulations.

2.2 SILICONE JOINT SEALANTS

A. General

1. Single-component, nonsag, neutral-curing silicone sealant complying with ASTM C920, Type S, Grade NS.

B. Movement Capability

1. Class 50 minimum unless otherwise required by joint conditions.

C. Use

1. Exterior joints and interior joints where high movement, moisture resistance, or durability is required.

D. Manufacturers

1. Subject to compliance with requirements, provide products by one of the following:

a. GE Construction Sealants (Momentive)
b. Dow
c. Sika
d. Tremco
e. Pecora
f. Or approved equal

2.3 LATEX JOINT SEALANTS

A. General

1. Acrylic latex or siliconized acrylic latex sealant complying with ASTM C834.

B. Use

1. Interior joints not subject to significant movement or moisture exposure.

2.4 JOINT-SEALANT BACKING

A. Backer Rod

1. Closed-cell or open-cell polyethylene foam as recommended by sealant manufacturer.

B. Bond Breaker

1. Polyethylene tape or other suitable material where backer rod cannot be used.

C. Requirements

1. Backing materials shall be nonstaining, nonabsorptive, and compatible with sealant and substrates.

2.5 PRIMERS

A. Provide primers where recommended in writing by sealant manufacturer for substrates and conditions indicated.

2.6 ACCESSORIES

A. Masking Tape

1. Nonstaining, nonabsorbent type compatible with substrates.

B. Cleaning Materials

1. As recommended by sealant manufacturer.

PART 3 - EXECUTION

3.1 EXAMINATION

A. Verify that joint substrates are sound, clean, dry, and properly prepared to receive sealants.

B. Do not proceed with installation until unsatisfactory conditions have been corrected.

3.2 PREPARATION

A. Clean joint surfaces of all contaminants including dust, laitance, oil, grease, old sealants, and other materials that could impair adhesion.

B. Prepare porous substrates by grinding, sandblasting, or other methods as required to achieve sound surface.

C. Install primers where required by manufacturer.

D. Protect adjacent surfaces from staining or damage.

3.3 INSTALLATION OF BACKING MATERIALS

A. Install backer rod to achieve proper joint depth and profile.

B. Install bond breaker where backer rod is not feasible.

C. Do not puncture, stretch, or otherwise damage backing materials.

3.4 INSTALLATION OF JOINT SEALANTS

A. General

1. Install sealants in accordance with manufacturer's written instructions and ASTM C1193.

B. Application

1. Place sealant to ensure full contact with joint sides.
2. Completely fill joints without voids or air pockets.
3. Maintain proper width-to-depth ratios as recommended by manufacturer.

C. Tooling

1. Tool sealant immediately after placement.
2. Provide smooth, uniform, concave profile unless otherwise required.

3. Use tooling agents approved by manufacturer.

3.5 FIELD QUALITY CONTROL

A. Perform field adhesion testing in accordance with ASTM C1521 where directed by Architect.

B. Remove and replace sealant that fails adhesion testing.

3.6 3.6 CLEANING

A. Remove excess sealant from adjacent surfaces as work progresses.

B. Clean in accordance with manufacturer's written instructions.

3.7 3.7 PROTECTION

A. Protect installed sealants from damage and contamination during construction.

B. Do not allow sealants to be disturbed until cured.

END OF SECTION 079200

SECTION 079219 - ACOUSTICAL JOINT SEALANTS

PART 1 - GENERAL

1.1 SUMMARY

A. Section Includes:

1. Acoustical joint sealants used to maintain airborne sound isolation at perimeters of partitions, ceiling interfaces, and penetrations.

B. Related Requirements:

1. Section 07 92 00 “Joint Sealants” – Elastomeric and latex sealants for non-acoustical and exterior joints.
2. Section 09 29 00 “Gypsum Board” – For coordination of acoustical sealant at head-of-wall joints and penetrations.
3. Division 23 Sections – For penetrations of acoustically rated partitions by ductwork or piping.

1.2 REFERENCE STANDARDS

A. ASTM C834 – Standard Specification for Latex Sealants.
B. ASTM C919 – Standard Practice for Use of Sealants in Acoustical Applications.
C. ASTM C1193 – Standard Guide for Use of Joint Sealants.
D. ASTM E90 – Standard Test Method for Laboratory Measurement of Airborne Sound Transmission Loss.
E. ASTM E413 – Classification for Rating Sound Insulation.
F. CDPH Standard Method V1.2 – VOC Emissions Testing.
G. SCAQMD Rule 1168 – VOC Limits for Sealants and Caulks.

1.3 ADMINISTRATIVE REQUIREMENTS

A. Coordination: Coordinate locations of acoustical sealant application with gypsum board, ceiling, and door frame installation to ensure continuous sound control.
B. Pre-Installation Meeting: If requested by Architect, conduct a coordination meeting prior to installation to review acoustical sealing details and sequencing.

1.4 SUBMITTALS

A. Product Data:

1. Manufacturer’s technical data, installation instructions, and limitations.
2. VOC content and emissions documentation in compliance with CDPH V1.2.
3. Sound-isolation performance data for representative tested assemblies per ASTM E90/E413.

B. Samples: One color sample for each exposed sealant type.
C. Installer Qualifications: If sealant is installed by a subcontractor, submit documentation of minimum three (3) completed acoustical sealant projects of similar scope.
D. Sustainability Submittals: Manufacturer certification of VOC content ≤ 250 g/L and compliance with CDPH emission limits.

1.5 DELIVERY, STORAGE, AND HANDLING

A. Deliver materials in unopened original containers bearing manufacturer’s label and batch number.
B. Store sealants in a clean, dry, well-ventilated space with temperatures maintained between 40 °F and 95 °F (4 °C and 35 °C).
C. Protect materials from freezing, direct sunlight, and contamination.
D. Remove rags and waste daily; comply with local fire and environmental regulations.

1.6 FIELD CONDITIONS

A. Do not apply sealant to damp, frosted, or contaminated substrates.
B. Maintain ambient temperature and humidity within manufacturer's recommended limits before, during, and after application.
C. Provide adequate ventilation until curing is complete.

1.7 QUALITY ASSURANCE

A. Manufacturer Qualifications: Minimum five (5) years' experience producing acoustical joint sealants of the specified type.
B. Installer Qualifications: Minimum three (3) years' experience with acoustical sealant installations for sound-rated assemblies.
C. Regulatory Requirements: Comply with VOC regulations of jurisdiction where project is located.

1.8 WARRANTY

A. Provide manufacturer's standard one-year warranty for materials and workmanship.
B. Warranty shall cover sealant adhesion, cohesion, and sound-blocking performance under normal building conditions.

PART 2 - PRODUCTS

2.1 MANUFACTURERS

A. Subject to compliance with requirements, acceptable manufacturers include:
1. DAP Products Inc. – "Acrylic Latex Acoustical Sealant."
2. Hilti, Inc. – "CP 506 Smoke and Sound Sealant."
3. Pecora Corporation – "AC-20 FTR Acoustical and Insulation Sealant."
4. Or approved equal in accordance with Section 01 60 00 "Product Requirements."

2.2 PERFORMANCE REQUIREMENTS

A. Airborne Sound Transmission: Sealant shall maintain STC rating of tested assembly per ASTM E90/E413; loss of not more than 1 STC point when installed.
B. VOC Content: Maximum 250 g/L per SCAQMD Rule 1168.
C. Emissions: Comply with CDPH Standard Method V1.2; formaldehyde ≤ 9 µg/m³ or 7 ppb.
D. Service Temperature Range: -20 °F to +180 °F (-29 °C to 82 °C).
E. Movement Capability: ± 12 percent minimum per ASTM C834.
F. Paintability: Compatible with standard latex paints.

2.3 MATERIALS

A. Acoustical Sealant for Exposed and Concealed Joints:
1. Type: Single-component, nonsag, paintable latex sealant meeting ASTM C834 and ASTM C919.
2. Color: As selected by Architect for exposed applications; gray or off-white for concealed applications.
3. Tooling Life: 10 to 20 minutes typical.
4. Cure Time: Skin within 60 minutes; full cure within 7 days at 77 °F and 50 % RH.
B. Primers: As recommended by sealant manufacturer for substrate conditions.
C. Backing Materials (if used): Non-gassing, non-staining polyethylene or polyurethane foam rope complying with ASTM C1330 Type O.
D. Accessories: Cleaners, masking tape, and tools recommended by manufacturer for proper installation.

PART 3 - EXECUTION

3.1 EXAMINATION

A. Examine joints indicated to receive acoustical joint sealants, with Installer present, for compliance with requirements for joint configuration, installation tolerances, and other conditions affecting performance.

B. Verify that substrates are sound, dry, clean, and free of frost, dust, oil, and other contaminants that could affect adhesion.

C. Do not begin sealant application until unsatisfactory conditions have been corrected.

D. Confirm that wall, ceiling, and floor assemblies to receive sealant have been constructed in accordance with sound-rated design details.

3.2 PREPARATION

A. Clean joints immediately before installing acoustical sealants in accordance with manufacturer's written instructions.

B. Prime joint substrates where recommended by manufacturer. Apply primer only within joint areas; prevent migration onto adjacent finished surfaces.

C. Use masking tape where required to prevent contact of sealant or primer with adjoining surfaces that otherwise would be stained or damaged; remove tape promptly after tooling.

D. Remove dirt, loose materials, and other debris; ensure joint faces are completely dry before application.

3.3 INSTALLATION OF ACOUSTICAL JOINT SEALANTS

A. Comply with ASTM C919, ASTM C1193, and manufacturer's written installation instructions unless more stringent requirements apply.

B. Apply sealant using techniques necessary to completely fill joints and voids, ensuring continuous contact with joint sides and substrates. Tool to achieve complete wetting of surfaces.

C. STC-Rated Assemblies:

1. Install continuous beads of acoustical sealant at perimeters, control joints, and penetrations to prevent flanking paths.
2. Seal partitions to floor slabs, deck assemblies, curtain wall anchors, window and door frames, and other dissimilar materials as indicated.
3. Apply sealant on both sides of partitions at head, base, and intersecting walls where required for sound isolation.

D. Acoustical Ceiling Areas:

1. Apply continuous ribbons of acoustical sealant at perimeter edge moldings and intersections with partitions before installing ceiling grid or molding.

E. Apply sealant generously at back of electrical boxes, plumbing penetrations, and other openings in acoustically rated assemblies.

F. Do not overfill or smear beyond intended joint boundaries. Remove excess immediately after tooling.

3.4 CLEANING

A. Clean off excess sealant or smears from adjacent surfaces as the Work progresses, using materials approved by sealant and substrate manufacturers.

B. Remove masking tape immediately after tooling without disturbing finished joints.

3.5 PROTECTION

A. Protect acoustical joint sealants during and after curing from contact with dust, dirt, and other contaminants, and from damage due to subsequent construction operations.

B. Replace or repair any damaged, deteriorated, or improperly installed sealant so that repaired areas are visually and acoustically consistent with adjacent work.

C. Do not apply paint or finishes until sealant has fully cured and installation has been approved.

END OF SECTION 079219

SECTION 079513 – EXPANSION JOINT COVER ASSEMBLIES

PART 1 – GENERAL

1.1 RELATED DOCUMENTS

A. Drawings and general provisions of the Contract, including General and Supplementary Conditions and Division 01 Specification Sections, apply to this Section.

1.2 SUMMARY

A. Section Includes:
1. Interior floor expansion joint cover assemblies.
2. Interior wall and ceiling expansion joint cover assemblies.
3. Exterior wall and soffit expansion joint cover assemblies.
4. Fire-resistance-rated expansion joint systems.
5. Moisture barrier and insulated thermal barrier assemblies associated with expansion joints.

B. Related Requirements:
1. Section 033000 “Cast-In-Place Concrete” – substrates at floor and wall joints.
2. Section 042200 “Unit Masonry” – substrates at wall joints.
3. Section 051200 “Structural Steel Framing” – structure supporting joint assemblies.
4. Section 075323 “EPDM Membrane Roofing” – roof expansion joints and membrane tie-ins.
5. Section 076200 “Sheet Metal Flashing and Trim” – sheet metal flashings coordinated with joint covers.
6. Section 078413 “Penetration Firestopping” – firestopping at other penetrations.
7. Section 079200 “Joint Sealants” – sealants at perimeters of joint cover assemblies.

1.3 REFERENCES

A. ASTM B209 – Standard Specification for Aluminum and Aluminum-Alloy Sheet and Plate.

B. ASTM B221 – Standard Specification for Aluminum and Aluminum-Alloy Extruded Bars, Rods, Wire, Profiles, and Tubes.

C. ASTM E1399 – Standard Test Method for Cyclic Movement and Measuring the Minimum and Maximum Joint Widths of Architectural Joint Systems.

D. ASTM E1612 – Standard Specification for Preformed Architectural Compression Seals for Buildings and Parking Structures.

E. ANSI A137.1 / A326.3 – Standard Test Method for Measuring Dynamic Coefficient of Friction on Hard Surface Flooring Materials.

F. UL 2079 – Tests for Fire Resistance of Building Joint Systems.

G. ULC S115 – Fire Tests of Firestop Systems.

1.4 DEFINITIONS

A. Movement Capability: Total amount of joint width change, expressed as a percentage of nominal joint width, that a system can accommodate while maintaining required performance.

1. Thermal Movement: Minimum ±25 percent of nominal joint width, unless otherwise indicated.
2. Seismic/Wind-Sway Movement: Minimum ±50 percent of nominal joint width where indicated on Drawings.

B. Load Classifications (for floor systems):

1. Standard Loads: Typical pedestrian traffic with occasional light rubber-tired carts; up to 500 lb concentrated load.
2. Moderate Loads: Pedestrian traffic plus occasional heavier equipment (gurneys, small lifts, scrubbers); up to 1000 lb concentrated load.
3. Heavy Duty Loads: Frequent heavy wheeled traffic or equipment; up to 2000 lb concentrated load (higher where specifically indicated).

1.5 PERFORMANCE REQUIREMENTS

A. Joint coverplate systems shall accommodate building movements including thermal movement, minor settlement, and wind-sway without disengagement, binding, or damage to adjacent finishes.

B. Movement: Provide assemblies with movement capability equal to or greater than the movements indicated on Drawings and in structural documents, tested in accordance with ASTM E1399 where applicable.

C. Fire-Resistance Ratings: Where fire-rated expansion joint systems are indicated, provide assemblies tested as a complete system in accordance with UL 2079 or ULC S115, with ratings matching or exceeding the rating of the adjoining construction.

D. Load Capacity: Floor joint cover systems shall accommodate anticipated traffic loads without permanent deformation or damage, consistent with load classifications indicated above and as scheduled on Drawings.

E. Moisture and Air Infiltration: Exterior and roof-related systems shall include moisture barriers and accessories to prevent water intrusion into building envelope assemblies.

1.6 QUALITY ASSURANCE

A. Manufacturer Qualifications:

1. Manufacturer regularly engaged in the design and fabrication of architectural expansion joint systems for not less than ten (10) years.
2. Capable of providing interior and exterior joint systems, fire-rated systems, moisture barriers, and accessories from a single coordinated product line.

B. Installer Qualifications:

1. Company with not less than three (3) years of experience installing architectural joint cover assemblies similar in type and complexity to those required for this Project.

C. Single Source: Provide joint covers, fire barrier assemblies, moisture barrier systems, and accessories for each joint condition from one manufacturer to ensure compatibility.

1.7 ACTION SUBMITTALS

A. Product Data: For each type of expansion joint cover system, fire barrier, and moisture barrier, including:

1. Materials, profiles, movement capability, load ratings, and fire-resistance ratings.
2. Installation instructions and substrate preparation requirements.

B. Shop Drawings: Show joint locations, widths, movement requirements, profiles, anchorage, transitions, intersections, and terminations. Coordinate with structural and architectural joint layouts.

C. Samples:

1. Minimum 4-inch long sample of each exposed joint cover type and exposed seal, showing finish, color, and configuration.

D. Fire-Resistance-Rated Assemblies:

1. UL or ULC design numbers and listing information documenting compliance for each fire-rated joint system.

E. Environmental Certifications:

1. For synthetic rubber or thermoplastic seals within occupied areas, provide documentation of GREENGUARD Gold or equivalent low-VOC certification, where available from manufacturer.

1.8 INFORMATIONAL SUBMITTALS

A. Manufacturer's Qualification Data.

B. Installer's Qualification Data.

C. Field Test Reports (if performed).

1.9 DELIVERY, STORAGE, AND HANDLING

A. Deliver products in manufacturer's original, unopened packaging, labeled with manufacturer's name, product identification, and lot numbers.

B. Store materials indoors, off the ground, in a dry, clean, well-ventilated area, protected from damage, dirt, moisture, and direct sunlight.

C. Protect finished surfaces of exposed components with factory-applied strippable films; remove films after installation and prior to substantial completion.

1.10 FIELD CONDITIONS

A. Do not install joint cover assemblies until ambient temperature and humidity are within manufacturer's recommended limits.

B. Do not install joint cover assemblies over wet, frozen, or contaminated substrates.

1.11 WARRANTY

A. Manufacturer Warranty: Provide manufacturer's standard written warranty for a period of not less than five (5) years from date of Substantial Completion, covering defects in materials and manufacturing.

B. Installer Warranty: Provide installer's warranty for a period of two (2) years from date of Substantial Completion, covering defects in installation.

PART 2 – PRODUCTS

2.1 MANUFACTURERS

A. Basis of Design: JointMaster (Inpro Corporation), or comparable system by one of the following:

1. Balco, Inc.
2. MM Systems Corporation.
3. Or approved equal.

B. Substitutions: Under provisions of Division 01.

2.2 MATERIALS

A. Aluminum: ASTM B221 or ASTM B209, alloy 6063-T5, 6063-T6, 6005A, or 5052-H32, as recommended by manufacturer for profiles and loads required.

1. Floor Systems: Mill finish unless otherwise indicated.
2. Wall and Ceiling Systems: Clear anodized Class II finish unless otherwise indicated.

B. Elastomeric Seals:

1. Manufacturer's standard extruded thermoplastic elastomer (Santoprene or similar) compatible with adjacent materials and suitable for heat-welded transitions where applicable.
2. Provide dual-durometer seals where required to achieve durability and load resistance.
3. VOC/Emissions: GREENGUARD Gold or equivalent where available.

C. Precompressed Foam Seals (Silicone-Faced):

1. Open-cell polyurethane foam, factory impregnated and silicone-faced, precompressed for installation, compliant with ASTM E1612.
2. Movement: Capable of ±50 percent movement of nominal joint size unless otherwise
3. Weather-Resistant and UV-stable for interior or exterior use as scheduled.

D. Moisture Barriers:

1. Reinforced EPDM membrane, minimum 45 mil thick, compatible with joint system and roofing/waterproofing assemblies.
2. Provide factory- or field-fabricated transitions, outlets, and drains where required.

E. Insulated Thermal Moisture Barriers (Where Indicated):

1. Reinforced EPDM membrane sandwiching insulation to achieve minimum R-value indicated on Drawings and maintaining joint movement capacity equal to joint cover assembly.

F. Fasteners: Stainless-steel or corrosion-resistant fasteners as recommended by manufacturer, compatible with substrates and metals in contact.

G. Sealants and Adhesives: As recommended by expansion joint manufacturer for specific substrates and joint system types; coordinate with Section 079200.

2.3 INTERIOR FLOOR JOINT COVER ASSEMBLIES

A. General: Recessed or surface-mounted aluminum frame and cover, with elastomeric or metal cover plates and/or seals, suitable for joint widths and movement indicated.

B. Performance:

1. Movement: Minimum ±25 percent thermal unless otherwise indicated.

2. Load Rating: As indicated on Drawings (Standard, Moderate, or Heavy Duty).

C. Features:

1. Flush or nearly flush walking surface.
2. Profiles capable of receiving adjacent floor finishes where indicated (resilient, tile, carpet).
3. Slip-resistance suitable for flooring type; coordinate with ANSI A326.3 where required.

2.4 INTERIOR WALL AND CEILING JOINT COVER ASSEMBLIES

A. General: Aluminum or aluminum/foam systems designed for joint widths and movements indicated; surface-mounted or recessed as detailed.

B. Movement: Minimum ±25 percent thermal; increase to ±50 percent for seismic joints where indicated.

C. Fire-Rated Assemblies: Provide listed systems where indicated, matching fire-resistance rating of adjacent rated wall/ceiling assembly.

2.5 EXTERIOR WALL AND SOFFIT JOINT COVER ASSEMBLIES

A. General: Weather-resistant joint cover systems with metal covers, elastomeric or foam seals, and continuous moisture barriers.

B. Movement: Minimum ±25 percent; ±50 percent where joints are designated as seismic.

C. Moisture Management: Provide integral or associated moisture barriers, end dams, and weeps to direct water to exterior.

2.6 FIRE-RATED EXPANSION JOINT ASSEMBLIES

A. Provide tested, listed fire-resistance-rated expansion joint assemblies, including fire barrier, joint cover, and accessories, as a complete system.

B. Fire Resistance: As indicated on Drawings, but not less than rating of adjoining construction.

C. Testing: UL 2079 or ULC S115. Provide assemblies tested for movement equal to or greater than required for project.

2.7 FABRICATION

A. Provide joint covers in standard lengths with factory-fabricated corners, transitions, and intersections to greatest extent possible.

B. Pre-weld or pre-form elastomeric seals and foam seals at corners and transitions where feasible to minimize field splicing.

PART 3 – EXECUTION

3.1 EXAMINATION

A. Verify locations and widths of structural expansion and control joints before installation.

B. Verify that substrates are sound, clean, level, and properly prepared to receive joint cover assemblies.

C. Do not begin installation until unsatisfactory conditions have been corrected.

3.2 PREPARATION

A. Clean joint openings of dust, dirt, laitance, curing compounds, sealers, coatings, or other contaminants that might affect adhesion or anchorage.

B. Coordinate and verify compatibility of joint covers with adjacent waterproofing and roofing membranes. Install moisture barriers and fire barriers before joint covers where required.

3.3 INSTALLATION

A. Install expansion joint cover assemblies in accordance with manufacturer's written instructions and approved Shop Drawings.

B. Set assemblies true to line and grade, plumb, and flush with adjacent finishes unless otherwise detailed.

C. Provide allowances and adjustments to accommodate actual joint width at time of installation within manufacturer's tolerances; do not shim structural frames in a manner not approved by manufacturer.

D. Anchor assemblies securely and in a manner that allows for designed thermal and seismic movement without damage.

E. Fire-Rated Systems: Install fire barrier and joint cover assemblies as a complete, listed system, including all required accessories, in strict accordance with tested assembly and manufacturer's written instructions.

F. Moisture Barriers: Install membranes continuous across joint opening, properly lapped and sealed to adjacent waterproofing and roofing systems, with positive drainage to exterior.

3.4 FIELD QUALITY CONTROL

A. Allow access for inspection of fire-rated joint systems and moisture barriers prior to concealment where required by code or Authorities Having Jurisdiction.

B. Repair or replace joint assemblies that do not comply with specified requirements or that are damaged during construction.

3.5 CLEANING AND PROTECTION

A. Clean exposed metal and seal surfaces of joint cover assemblies of soil, sealant smears, and other foreign materials in accordance with manufacturer's recommendations.

B. Protect installed assemblies from damage due to subsequent construction operations. Remove and replace assemblies that are deformed, scratched through finish, or otherwise damaged so that they cannot be restored to like-new condition.

END OF SECTION 079513

SECTION 080671 (NHG) – DOOR HARDWARE SCHEDULE

PART 1 - GENERAL

1.1 RELATED DOCUMENTS

A. Drawings and general provisions of the Contract, including General and Supplementary Conditions and Division 1 Specification Sections, apply to this Section.

1.2 SUMMARY

A. This Section references specification sections relating to commercial door hardware for the following:

1. Swinging doors.
2. Sliding Doors.
3. Other doors to the extent indicated.

B. Commercial door hardware includes, but is not necessarily limited to, the following:

1. Mechanical door hardware.
2. Electromechanical and access control door hardware.
3. Electromechanical and access control door hardware power supplies, back-ups and surge protection.
4. Automatic operators.
5. Cylinders specified for doors in other sections.

C. Related Sections:

1. Division 08 Section “Door Hardware”.
2. Division 26 Section “Electrical”.

D. Codes and References: Comply with the version adopted by the Authority Having Jurisdiction.

1. ANSI A117.1 - Accessible and Usable Buildings and Facilities.
2. ICC/IBC - International Building Code.
3. NFPA 70 - National Electrical Code.
4. NFPA 80 - Fire Doors and Windows.
5. NFPA 101 - Life Safety Code.
6. NFPA 105 - Installation of Smoke Door Assemblies.
7. State Building Codes, Local Amendments.

E. Standards: Reference Related Sections for requirements regarding compliance with applicable industry standards.

1.3 SUBMITTALS

A. Product Data: Manufacturer's product data sheets including installation details, material descriptions, dimensions of individual components and profiles, operational descriptions and finishes.

B. Door Hardware Schedule: Prepared by or under the supervision of supplier, detailing fabrication and assembly of door hardware, as well as procedures and diagrams. Coordinate the final Door Hardware Schedule with doors, frames, and related work to ensure proper size, thickness, hand, function, and finish of door hardware.

1. Format: Comply with scheduling sequence and vertical format in DHI's "Sequence and Format for the Hardware Schedule."

2. Organization: Organize the Door Hardware Schedule into door hardware sets indicating complete designations of every item required for each door or opening. Organize door hardware sets in same order as in the Door Hardware Sets at the end of Part 3. Submittals that do not follow the same format and order as the Door Hardware Sets will be rejected and subject to resubmission.

3. Content: Include the following information:

a. Type, style, function, size, label, hand, and finish of each door hardware item.
b. Manufacturer of each item.
c. Fastenings and other pertinent information.
d. Location of door hardware set, cross-referenced to Drawings, both on floor plans and in door and frame schedule.
e. Explanation of abbreviations, symbols, and codes contained in schedule.
f. Mounting locations for door hardware.
g. Door and frame sizes and materials.

4. Submittal Sequence: Submit the final Door Hardware Schedule at earliest possible date, particularly where approval of the Door Hardware Schedule must precede fabrication of other work that is critical in the Project construction schedule. Include Product Data, Samples, Shop Drawings of other work affected by door hardware, and other information essential to the coordinated review of the Door Hardware Schedule.

C. Keying Schedule: Prepared under the supervision of the Owner, separate schedule detailing final keying instructions for locksets and cylinders in writing. Include keying system explanation, door numbers, key set symbols, hardware set numbers and special instructions. Owner to approve submitted keying schedule prior to the ordering of permanent cylinders.

D. Product Test Reports: Indicating compliance with cycle testing requirements, based on evaluation of comprehensive tests performed by manufacturer and witnessed by a qualified independent testing agency.

E. Operating and Maintenance Manuals: Provide manufacturers operating and maintenance manuals for each item comprising the complete door hardware installation in quantity as required in Division 01, Closeout Submittals. The manual to include the name, address, and contact information of the manufacturers providing the hardware and their nearest service representatives. The final copies delivered after completion of the installation test to include "as built" modifications made during installation, checkout, and acceptance.

F. Warranties and Maintenance: Special warranties and maintenance agreements specified in the Related Sections.

1.4 QUALITY ASSURANCE

A. Manufacturers Qualifications: Engage qualified manufacturers with a minimum [5] years of documented experience in producing hardware and equipment similar to that indicated for this Project and that have a proven record of successful in-service performance.

B. Installer Qualifications: Installers, trained by the primary product manufacturers, with a minimum [3] years documented experience installing both standard and electrified builders hardware similar in material, design, and extent to that indicated for this Project and whose work has resulted in construction with a record of successful in-service performance.

C. Door Hardware Supplier Qualifications: Experienced commercial door hardware distributors with a minimum [5] years documented experience supplying both mechanical and electromechanical hardware installations comparable in material, design, and extent to that indicated for this Project. Supplier recognized as a factory direct distributor in good standing by the manufacturers of the primary materials with a warehousing facility in Project's vicinity. Supplier to have on staff a certified Architectural Hardware Consultant (AHC) available during the course of the Work to consult with Contractor, Architect, and Owner concerning both standard and electromechanical door hardware and keying.

D. Source Limitations: Obtain each type and variety of Door Hardware specified in the Related Sections from a single source, qualified supplier unless otherwise indicated.

E. Regulatory Requirements: Comply with NFPA 70, NFPA 80, NFPA 101 and ANSI A117.1 requirements and guidelines as directed in the applicable model building code.

F. Pre-Submittal Conference: Conduct coordination conference in compliance with requirements in Division 01 Section "Project Meetings" with attendance by representatives of Supplier(s), Installer(s), and Contractor(s) to review proper methods and the procedures for receiving, handling, and installing door hardware.

1.5 DELIVERY, STORAGE, AND HANDLING

A. Inventory door hardware on receipt and provide secure lock-up and shelving for door hardware delivered to Project site. Do not store electronic access control hardware, software or accessories at Project site without prior authorization.

B. Tag each item or package separately with identification related to the final Door Hardware Schedule, and include basic installation instructions with each item or package.

C. Deliver, as applicable, permanent keys, cylinders, cores, access control credentials, software and related accessories directly to Owner via registered mail or overnight package service. Instructions for delivery to the Owner shall be established at the "Keying Conference".

1.6 COORDINATION

A. Templates: Obtain and distribute to the parties involved templates for doors, frames, and other work specified to be factory prepared for installing standard and electrified hardware. Check

Shop Drawings of other work to confirm that adequate provisions are made for locating and installing hardware to comply with indicated requirements.

B. Door and Frame Preparation: Division 08 Sections (Steel, Aluminum and Wood) doors and corresponding frames are to be prepared, reinforced and pre-wired (if applicable) to receive the installation of the specified electrified, monitoring, signaling and access control system hardware without additional in-field modifications.

1.7 WARRANTY

A. General Warranty: Reference Division 01, General Requirements. Special warranties specified in this Article shall not deprive Owner of other rights Owner may have under other provisions of the Contract Documents and shall be in addition to, and run concurrent with, other warranties made by Contractor under requirements of the Contract Documents.

1.8 MAINTENANCE SERVICE

A. Maintenance Tools and Instructions: Furnish a complete set of specialized tools and maintenance instructions as needed for Owner's continued adjustment, maintenance, and removal and replacement of door hardware.

PART 2 - PRODUCTS

2.1 SCHEDULED DOOR HARDWARE

A. Refer to “PART 3 – EXECUTION” for required specification sections.

PART 3 - EXECUTION

3.1 DOOR HARDWARE SETS

A. The door hardware sets represent the design intent and direction of the owner and architect. They are a guideline only and should not be considered a detailed hardware schedule. Discrepancies, conflicting hardware and missing items should be brought to the attention of the architect with corrections made prior to the bidding process. Omitted items not included in a hardware set should be scheduled with the appropriate additional hardware required for proper application and functionality.

1. Quantities listed are for each pair of doors, or for each single door.

2. The supplier is responsible for handing and sizing all products.

3. Where multiple options for a piece of hardware are given in a single line item, the supplier shall provide the appropriate application for the opening.

4. At existing openings with new hardware the supplier shall field inspect existing conditions prior to the submittal stage to verify the specified hardware will work as required. Provide alternate solutions and proposals as needed.

B. Products listed in the hardware sets shall be supplied by and in accordance with the requirements described in the specification section as noted for each item.

1. Section 08 71 00 – Door Hardware.

C. Manufacturer's Abbreviations:

1. MK - McKinney
2. PE - Pemko
3. SU - Securitron
4. RO - Rockwood
5. RU - Corbin Russwin
6. MC - Medeco
7. NO - Norton Rixson
8. OT - Other

Hardware Sets

Set: 1.0

Doors: 06A, 17C

2	Continuous Hinge	CFM_SLF-HD1 PT x Length Required		PE	087100	
2	Electric Power Transfer	EL-CEPT	630	SU	087100	⚡
1	CVR Exit, Nightlatch	PED5850T MELR PED159 AD M92 CT6SB	630	RU	087100	
1	CVR Exit, Exit Only	PED5801 MELR EO AD M92	630	RU	087100	
1	Cylinder/Core	Match Existing; Field Verify	26	MC	087100	
2	Pull	RM5277-36 Mtg-Type 12XHD	US32D	RO	087100	
2	Concealed Overhead Stop	6-X36	630	NO	087100	
2	Surface Closer	PR7500	689	NO	087100	
1	Rain Guard	346C (Omit at overhangs)		PE	087100	
2	Sweep	3452CNB x Length Required		PE	087100	
1	Threshold	273x224AFGT x Length Required x MSES25SS		PE	087100	
2	ElectroLynx Harness - Frame	QC-C1500P		MK	087100	⚡
2	ElectroLynx Harness - Door	QC-CXXX (Size as required)		MK	087100	⚡
1	Card Reader	By Security Supplier				
2	Position Switch	DPS - M/W		SU	087100	⚡
1	Power Supply	AQL4-R8E1 x Relays as Required		SU	087100	⚡
1	Wiring Diagram	Elevation and Point to Point as Specified		OT		

Notes: Perimeter and meeting stile gasket by door / frame manufacturer.
Operational narrative: Door normally closed and secure. Access by valid credential. Free egress always. Door remains latched and secure upon power loss or fire alarm activation. Access control system monitors door position and verifies valid egress via REX. Keyed cylinder for emergency access.

Set: 2.0

Doors: 02A, 12A

1	Continuous Hinge	CFM_SLF-HD1 PT x Length Required		PE	087100	
1	Electric Power Transfer	EL-CEPT	630	SU	087100	⚡
1	Rim Exit, Fail Secure	PED52905 N9905PT M92 CT6SB	630	RU	087100	⚡
1	Cylinder/Core	Match Existing; Field Verify	26	MC	087100	
1	Concealed Overhead Stop	6-X36	630	NO	087100	
1	Surface Closer	PR7500	689	NO	087100	
1	Rain Guard	346C (Omit at overhangs)		PE	087100	
1	Sweep	3452CNB x Length Required		PE	087100	
1	Threshold	273x224AFGT x Length Required x MSES25SS		PE	087100	
1	ElectroLynx Harness - Frame	QC-C1500P		MK	087100	⚡
1	ElectroLynx Harness - Door	QC-CXXX (Size as required)		MK	087100	⚡
1	Card Reader	By Security Supplier				
1	Position Switch	DPS - M/W		SU	087100	⚡
1	Power Supply	AQL4-R8E1 x Relays as Required		SU	087100	⚡
1	Wiring Diagram	Elevation and Point to Point as Specified		OT		

Notes: Perimeter and meeting stile gasket by door / frame manufacturer.
Operational narrative: Door normally closed and secure. Access by valid credential. Free egress always. Door remains latched and secure upon power loss or fire alarm activation. Access control system monitors door position and verifies valid egress via REX. Keyed cylinder for emergency access.

Set: 3.0

Doors: 13A, 13B, 13C, 13D

1	Continuous Hinge	CFM_SLF-HD1-M x Length Required		PE	087100
1	Rim Exit, Nightlatch	PED5257 K157ET CT6SB	630	RU	087100
1	Cylinder/Core	Match Existing; Field Verify	26	MC	087100
1	Pull	RM5277-36 Mtg-Type 12XHD	US32D	RO	087100
1	Concealed Overhead Stop	6-X36	630	NO	087100
1	Surface Closer	PR7500	689	NO	087100
1	Rain Guard	346C (Omit at overhangs)		PE	087100
1	Sweep	3452CNB x Length Required		PE	087100
1	Threshold	273x224AFGT x Length Required x MSES25SS		PE	087100

Set: 4.0

Doors: 06B

2	Continuous Hinge	CFM_SLF-HD1 PT x Length Required		PE	087100
2	Electric Power Transfer	EL-CEPT	630	SU	087100
1	CVR Exit, Nightlatch	PED5850T MELR PED159 AD M92 CT6SB	630	RU	087100
1	CVR Exit, Exit Only	PED5801 MELR EO AD M92	630	RU	087100
1	Cylinder/Core	Match Existing; Field Verify	26	MC	087100
2	Pull	RM5277-36 Mtg-Type 12XHD	US32D	RO	087100
2	Concealed Overhead Stop	6-X36	630	NO	087100
2	Surface Closer	PR7500	689	NO	087100
2	ElectroLynx Harness - Frame	QC-C1500P		MK	087100
2	ElectroLynx Harness - Door	QC-CXXX (Size as required)		MK	087100
1	Card Reader	By Security Supplier			
2	Position Switch	DPS - M/W		SU	087100
1	Power Supply	AQL4-R8E1 x Relays as Required		SU	087100
1	Wiring Diagram	Elevation and Point to Point as Specified		OT	

Notes: Perimeter and meeting stile gasket by door / frame manufacturer.
Operational narrative: Door normally closed and secure. Access by valid credential. Free egress always. Door remains latched and secure upon power loss or fire alarm activation. Access control system monitors door position and verifies valid egress via REX. Keyed cylinder for emergency access.

Set: 5.0

Doors: 17A, 17B

6	Hinge, Full Mortise, Hvy Wt	T4A3786-MCK [NRP-HVY] FT	US26D	MK	087100
2	SVR Exit, Passage	PED5410 N9M10PT M55	630	RU	087100
2	Surface Closer	CPS7500	689	NO	087100
2	Kick Plate	K1050 10" high BEV CSK	US32D	RO	087100
2	Silencer	608		RO	087100

Set: 6.0

Doors: 14

6	Hinge, Full Mortise	TA2714-MCK FT [NRP-STD]	US26D	MK	087100
1	Dust Proof Strike	570	US26D	RO	087100
2	Flush Bolt	557 (12"/72" AFF)	US26D	RO	087100
1	Storeroom Lock	ML2057 NSA CT6SB	626	RU	087100

1	Cylinder/Core	Match Existing; Field Verify	26	MC	087100
1	Surface Overhead Stop	10-X36	689	NO	087100
1	Surface Closer	CPS7500	689	NO	087100
2	Silencer	608		RO	087100

Set: 7.0

Doors: 01, 05, 09, 16

3	Hinge, Full Mortise	TA2714-MCK FT [NRP-STD]	US26D	MK	087100
1	Storeroom Lock	ML2057 NSA CT6SB	626	RU	087100
1	Cylinder/Core	Match Existing; Field Verify	26	MC	087100
1	Surface Closer	7500	689	NO	087100
1	Kick Plate	K1050 10" high BEV CSK	US32D	RO	087100
1	Wall Stop	RM860 (or) RM861 (As Required)	US26D	RO	087100
3	Silencer	608		RO	087100

Set: 8.0

Doors: 15

3	Hinge, Full Mortise	TA2714-MCK FT [NRP-STD]	US26D	MK	087100
1	Classroom Intruder Lock	ML2052 NSA CT6SB	626	RU	087100
2	Cylinder/Core	Match Existing; Field Verify	26	MC	087100
1	Wall Stop	RM860 (or) RM861 (As Required)	US26D	RO	087100
3	Silencer	608		RO	087100

Set: 9.0

Doors: 10, 11

3	Hinge, Full Mortise	TA2714-MCK FT [NRP-STD]	US26D	MK	087100
1	Classroom Intruder Lock	ML2052 NSA CT6SB	626	RU	087100
2	Cylinder/Core	Match Existing; Field Verify	26	MC	087100
1	Surface Closer	7500	689	NO	087100
1	Kick Plate	K1050 10" high BEV CSK	US32D	RO	087100
1	Wall Stop	RM860 (or) RM861 (As Required)	US26D	RO	087100
3	Silencer	608		RO	087100

Set: 10.0

Doors: 03

3	Hinge, Full Mortise	TA2714-MCK FT [NRP-STD]	US26D	MK	087100
1	Classroom Intruder Lock	ML2052 NSA CT6SB	626	RU	087100
2	Cylinder/Core	Match Existing; Field Verify	26	MC	087100
1	Kick Plate	K1050 10" high BEV CSK	US32D	RO	087100

1 Wall Stop	RM860 (or) RM861 (As Required)	US26D	RO	087100
3 Silencer	608		RO	087100

Set: 11.0

Doors: 08

3 Hinge, Full Mortise	TA2714-MCK FT [NRP-STD]	US26D	MK	087100
1 Institutional Privacy Lock	ML2069 NSA M34 V21 CT6SB	626	RU	087100
1 Cylinder/Core	Match Existing; Field Verify	26	MC	087100
1 Surface Closer	CPS7500	689	NO	087100
1 Kick Plate	K1050 10" high BEV CSK	US32D	RO	087100
1 Gasketing	S88BL (Head & Jambs)		PE	087100
1 Coat Hook	RM801	US26D	RO	087100

Set: 12.0

Doors: 02B, 12B

3 Hinge, Full Mortise	TA2714-MCK FT [NRP-STD]	US26D	MK	087100
1 Passage Latch	ML2010 NSA	626	RU	087100
1 Surface Closer	CPS7500	689	NO	087100
1 Kick Plate	K1050 10" high BEV CSK	US32D	RO	087100
3 Silencer	608		RO	087100

Set: 13.0

Doors: 04, 07

3 Hinge, Full Mortise, Hvy Wt	T4A3786-MCK [NRP-HVY] FT	US26D	MK	087100
1 Deadbolt	DL4117 CT6SB	626	RU	087100
1 Cylinder/Core	Match Existing; Field Verify	26	MC	087100
1 Push Pull	111x73C/73CL	US32D	RO	087100
1 Surface Closer	CPS7500	689	NO	087100
1 Kick Plate	K1050 10" high BEV CSK	US32D	RO	087100
3 Silencer	608		RO	087100

END OF SECTION 080671

SECTION 080671 (TES) – DOOR HARDWARE SCHEDULE

PART 1 - GENERAL

1.1 RELATED DOCUMENTS

A. Drawings and general provisions of the Contract, including General and Supplementary Conditions and Division 1 Specification Sections, apply to this Section.

1.2 SUMMARY

A. This Section references specification sections relating to commercial door hardware for the following:

1. Swinging doors.
2. Sliding Doors.
3. Other doors to the extent indicated.

B. Commercial door hardware includes, but is not necessarily limited to, the following:

1. Mechanical door hardware.
2. Electromechanical and access control door hardware.
3. Electromechanical and access control door hardware power supplies, back-ups and surge protection.
4. Automatic operators.
5. Cylinders specified for doors in other sections.

C. Related Sections:

1. Division 08 Section “All-Glass Entrances”.
2. Division 08 Section “Door Hardware”.

D. Codes and References: Comply with the version adopted by the Authority Having Jurisdiction.

1. ANSI A117.1 - Accessible and Usable Buildings and Facilities.
2. ICC/IBC - International Building Code.
3. NFPA 70 - National Electrical Code.
4. NFPA 80 - Fire Doors and Windows.
5. NFPA 101 - Life Safety Code.
6. NFPA 105 - Installation of Smoke Door Assemblies.
7. State Building Codes, Local Amendments.

E. Standards: Reference Related Sections for requirements regarding compliance with applicable industry standards.

1.3 SUBMITTALS

A. Product Data: Manufacturer's product data sheets including installation details, material descriptions, dimensions of individual components and profiles, operational descriptions and finishes.

B. Door Hardware Schedule: Prepared by or under the supervision of supplier, detailing fabrication and assembly of door hardware, as well as procedures and diagrams. Coordinate the final Door Hardware Schedule with doors, frames, and related work to ensure proper size, thickness, hand, function, and finish of door hardware.

1. Format: Comply with scheduling sequence and vertical format in DHI's "Sequence and Format for the Hardware Schedule."

2. Organization: Organize the Door Hardware Schedule into door hardware sets indicating complete designations of every item required for each door or opening. Organize door hardware sets in same order as in the Door Hardware Sets at the end of Part 3. Submittals that do not follow the same format and order as the Door Hardware Sets will be rejected and subject to resubmission.

3. Content: Include the following information:

a. Type, style, function, size, label, hand, and finish of each door hardware item.
b. Manufacturer of each item.
c. Fastenings and other pertinent information.
d. Location of door hardware set, cross-referenced to Drawings, both on floor plans and in door and frame schedule.
e. Explanation of abbreviations, symbols, and codes contained in schedule.
f. Mounting locations for door hardware.
g. Door and frame sizes and materials.

4. Submittal Sequence: Submit the final Door Hardware Schedule at earliest possible date, particularly where approval of the Door Hardware Schedule must precede fabrication of other work that is critical in the Project construction schedule. Include Product Data, Samples, Shop Drawings of other work affected by door hardware, and other information essential to the coordinated review of the Door Hardware Schedule.

C. Keying Schedule: Prepared under the supervision of the Owner, separate schedule detailing final keying instructions for locksets and cylinders in writing. Include keying system explanation, door numbers, key set symbols, hardware set numbers and special instructions. Owner to approve submitted keying schedule prior to the ordering of permanent cylinders.

D. Product Test Reports: Indicating compliance with cycle testing requirements, based on evaluation of comprehensive tests performed by manufacturer and witnessed by a qualified independent testing agency.

E. Operating and Maintenance Manuals: Provide manufacturers operating and maintenance manuals for each item comprising the complete door hardware installation in quantity as required in Division 01, Closeout Submittals. The manual to include the name, address, and contact information of the manufacturers providing the hardware and their nearest service representatives. The final copies delivered after completion of the installation test to include "as built" modifications made during installation, checkout, and acceptance.

F. Warranties and Maintenance: Special warranties and maintenance agreements specified in the Related Sections.

1.4 DELIVERY, STORAGE, AND HANDLING

A. Inventory door hardware on receipt and provide secure lock-up and shelving for door hardware delivered to Project site. Do not store electronic access control hardware, software or accessories at Project site without prior authorization.

B. Tag each item or package separately with identification related to the final Door Hardware Schedule, and include basic installation instructions with each item or package.

C. Deliver, as applicable, permanent keys, cylinders, cores, access control credentials, software and related accessories directly to Owner via registered mail or overnight package service. Instructions for delivery to the Owner shall be established at the "Keying Conference".

1.5 WARRANTY

A. General Warranty: Reference Division 01, General Requirements. Special warranties specified in this Article shall not deprive Owner of other rights Owner may have under other provisions of the Contract Documents and shall be in addition to, and run concurrent with, other warranties made by Contractor under requirements of the Contract Documents.

1.6 MAINTENANCE SERVICE

A. Maintenance Tools and Instructions: Furnish a complete set of specialized tools and maintenance instructions as needed for Owner's continued adjustment, maintenance, and removal and replacement of door hardware.

PART 2 - PRODUCTS

2.1 SCHEDULED DOOR HARDWARE

A. Refer to “PART 3 – EXECUTION” for required specification sections.

PART 3 - EXECUTION

3.1 DOOR HARDWARE SETS

A. The door hardware sets represent the design intent and direction of the owner and architect. They are a guideline only and should not be considered a detailed hardware schedule. Discrepancies, conflicting hardware and missing items should be brought to the attention of the architect with corrections made prior to the bidding process. Omitted items not included in a hardware set should be scheduled with the appropriate additional hardware required for proper application and functionality.

1. Quantities listed are for each pair of doors, or for each single door.

2. The supplier is responsible for handing and sizing all products.

3. Where multiple options for a piece of hardware are given in a single line item, the supplier shall provide the appropriate application for the opening.

4. At existing openings with new hardware the supplier shall field inspect existing conditions prior to the submittal stage to verify the specified hardware will work as required. Provide alternate solutions and proposals as needed.

B. Products listed in the hardware sets shall be supplied by and in accordance with the requirements described in the specification section as noted for each item.

1. Section 08 71 00 – Door Hardware.

C. Manufacturer's Abbreviations:

1. MK - McKinney
2. PE - Pemko
3. SU - Securitron
4. RO - Rockwood
5. RU - Corbin Russwin
6. MC - Medeco
7. NO - Norton Rixson
8. OT - Other

Hardware Sets

Set: 1.0

Doors: 116.01, 206.03

1	Continuous Hinge	CFM-SLF-HD1 PT X Length required		PE	087100	
1	Electric Power Transfer	EL-CEPT	630	SU	087100	ϟ

1	Rim Exit Device, Nightlatch	PED5247 MELR K157ET M92	630	RU	087100	
1	Rim Cylinder	- match Owner's Medeco X4 Key System	19	MC	087100	
1	Door Pull	RM5277	US32D	RO	087100	
1	Surface Closer	UNI7500	689	NO	087100	
1	Kick Plate	K1050 10" high CSK BEV	US32D	RO	087100	
1	Door Sweep	3452CNB x Length required		PE	087100	
1	Threshold	279x224AFGT x Length required		PE	087100	
1	ElectroLynx Harness	QC-C1500P (power transfer or electric strike to junction box above)		MK	087100	ϟ
1	ElectroLynx Harness	QC-C (power transfer to exit device rail)		MK	087100	ϟ
1	Card Reader	- Provided by Security Contractor		OT	281300	ϟ
1	Door Position Switch	DPS-M-BK		SU	087100	ϟ
1	Power Supply	AQL4-R8E1		SU	087100	ϟ
1	Wiring Diagram	- Elevation and Point to Point as Specified		OT		

Notes: Perimeter gasketing provided with aluminum / FRP assembly

Door normally closed and locked.
Presentation of valid credential at card reader retracts exit device latch bolt allowing ingress.
Door position switch to monitor and report open / closed status of opening to buildings access control system.
Exit device equipped with request to exit switch at rail to shunt door monitoring upon egress.
Free egress at all times.
Fail-secure.

Set: 2.0

Doors: 116K, 116R

1	Continuous Hinge	CFM__HD1 x Length required		PE	087100
1	Storeroom Lock	ML2057 NSA LC	626	RU	087100
1	Mort. Cylinder	- match Owner's Medeco X4 Key System	19	MC	087100
1	Surface Closer (w/Hold Open)	CPS7500T	689	NO	087100
1	Kick Plate	K1050 10" high CSK BEV	US32D	RO	087100
1	Gasketing	303AV TKSP x Head & Jambs		PE	087100
1	Rain Guard	346C TKSP x Lenth required		PE	087100
1	Door Sweep	3452CNB x Length required		PE	087100

1	Threshold	279x224AFGT x Length required		PE	087100	

Set: 3.0

Doors: 206.02

1	Continuous Hinge	CFM__HD1 x Length required		PE	087100	
1	Rim Exit Device	PED5257 N957PT	630C	RU	087100	
1	Rim Cylinder	- match Owner's Medeco X4 Key System	19	MC	087100	
1	Surface Closer	CPS7500	689	NO	087100	
1	Kick Plate	K1050 10" high CSK BEV	US32D	RO	087100	
1	Gasketing	303AV TKSP x Head & Jambs		PE	087100	
1	Rain Guard	346C TKSP x Lenth required		PE	087100	
1	Door Sweep	3452CNB x Length required		PE	087100	
1	Threshold	279x224AFGT x Length required		PE	087100	

Set: 4.0

Doors: 113.15, 206C

6	Hinge (heavy weight)	T4A3786 (NRP)	US26D	MK	087100	
2	Surface Vert Rod Exit, Exit Only	PED5401 A EO M55	630	RU	087100	
2	Concealed Overhead Stop	2-X36	652	NO	087100	
2	E/M Surface Closer / Holder	7705PTO	689	NO	087100	ϟ
4	Kick Plate	K1050 10" high CSK BEV	US32D	RO	087100	
1	Meeting Edge Seal	S772C x height of door		PE	087100	
1	Smoke / Sound Seal	S88BL - head and jambs		PE	087100	

Notes:

Doors held open by electromagnetic door closer / holder.. Power for electromagnetic holders shall be connected to fire alarm system in order that doors close immediately upon activation of fire alarm.

(Electromagnetic closer / holder has tri-volt coils for field selectable power: 120VAC, 24VAC/DC, 12VDC)

Set: 5.0

Doors: 121D.1

3	Hinge, Full Mortise	TA2714-MCK (NRP)	US26D	MK	087100	
1	Electric Power Transfer	EL-CEPT	630	SU	087100	ϟ
1	Fail Secure Lock	ML20906-SEC NSA M92 LC	626	RU	087100	ϟ
1	Mort. Cylinder	- match Owner's Medeco X4 Key System	19	MC	087100	
1	Surface Closer	7500 (PA or RA as required)	689	NO	087100	
1	Kick Plate	K1050 10" high CSK BEV	US32D	RO	087100	
1	Wall Stop	RM860	US32D	RO	087100	
1	Smoke / Sound Seal	S88BL - head and jambs		PE	087100	
1	ElectroLynx Harness	QC-C1500P (power transfer or electric strike to junction box above)		MK	087100	ϟ
1	ElectroLynx Harness	QC-C (power transfer to lock or electric strike location)		MK	087100	ϟ
1	Card Reader	- Provided by Security Contractor		OT	281300	ϟ
1	Door Position Switch	DPS-M-BK		SU	087100	ϟ
1	Power Supply	AQL4-R8E1		SU	087100	ϟ
1	Wiring Diagram	- Elevation and Point to Point as Specified		OT		

Notes:

Door normally closed and locked.
Presentation of valid credential at card reader unlocks electric lock allowing ingress.
Door position switch to monitor / report open closed status of opening to security system.
Electric lock equipped with request to exit switch at interior lever to shunt door monitoring at egress.
Free egress at all times.
Fail-secure.

Set: 6.0

Doors: 104, 104A, 107, 107A

3	Hinge (heavy weight)	T4A3786 (NRP)	US26D	MK	087100
1	Classroom Intruder Lock (w/ inside indicator)	ML2052 VNN V01 LC	626	RU	087100
2	Mort. Cylinder	- match Owner's Medeco X4 Key System	19	MC	087100
1	Surface Closer	7500 (PA or RA as required)	689	NO	087100
1	Kick Plate	K1050 10" high CSK BEV	US32D	RO	087100
1	Wall Stop	RM860	US32D	RO	087100
1	Acoustic Seal Set	PEMKOSTCSET-1A	BL	PE	087100

Notes:

Set: 7.0

Doors: 106A

3	Hinge, Full Mortise	TA2714-MCK (NRP)	US26D	MK	087100
1	Entrance Lock	ML2054 NSA LC	626	RU	087100
1	Mort. Cylinder	- match Owner's Medeco X4 Key System	19	MC	087100
1	Concealed Overhead Stop	2-X36	652	NO	087100
3	Silencer	608 / 609		RO	087100

Notes:

Set: 8.0

Doors: 107B

3	Hinge (heavy weight)	T4A3786 (NRP)	US26D	MK	087100
1	Classroom Intruder Lock (w/ inside indicator)	ML2052 VNN V01 LC	626	RU	087100
2	Mort. Cylinder	- match Owner's Medeco X4 Key System	19	MC	087100
1	Concealed Overhead Stop	2-X36	652	NO	087100
1	Surface Closer	7500 (PA or RA as required)	689	NO	087100
1	Mounting Plate	7786OH	689	NO	087100
1	Kick Plate	K1050 10" high CSK BEV	US32D	RO	087100
3	Silencer	608 / 609		RO	087100

Set: 9.0

Doors: 112.2

3	Hinge, Full Mortise	TA2714-MCK (NRP)	US26D	MK	087100
1	Storeroom Lock	ML2057 NSA LC	626	RU	087100
1	Mort. Cylinder	- match Owner's Medeco X4 Key System	19	MC	087100
1	Wall Stop	RM860	US32D	RO	087100
3	Silencer	608 / 609		RO	087100

Set: 10.0

Doors: 113.3, 113.4

3	Hinge (heavy weight)	T4A3786 (NRP)	US26D	MK	087100
1	Classroom Lock	ML2055 NSA LC	626	RU	087100

1	Mort. Cylinder	- match Owner's Medeco X4 Key System	19	MC	087100
1	Surface Closer (w/Hold Open)	7500H	689	NO	087100
1	Armor Plate	K1050 36" high CSK BEV	US32D	RO	087100
1	Wall Stop	RM860	US32D	RO	087100
3	Silencer	608 / 609		RO	087100

Notes:

Set: 11.0

Doors: 116J, 116M

3	Hinge (heavy weight)	T4A3786 (NRP)	US26D	MK	087100
1	Classroom Intruder Lock (w/ inside indicator)	ML2052 VNN V01 LC	626	RU	087100
2	Mort. Cylinder	- match Owner's Medeco X4 Key System	19	MC	087100
1	Surface Closer (w/Hold Open)	CPS7500T	689	NO	087100
1	Kick Plate	K1050 10" high CSK BEV	US32D	RO	087100
3	Silencer	608 / 609		RO	087100

Set: 12.0

Doors: 113Q

3	Hinge (heavy weight)	T4A3786 (NRP)	US26D	MK	087100
1	Classroom Intruder Lock (w/ inside indicator)	ML2052 VNN V01 LC	626	RU	087100
2	Mort. Cylinder	- match Owner's Medeco X4 Key System	19	MC	087100
1	Surface Closer (w/Hold Open)	7500H	689	NO	087100
1	Kick Plate	K1050 10" high CSK BEV	US32D	RO	087100
1	Wall Stop	RM860	US32D	RO	087100
3	Silencer	608 / 609		RO	087100

Set: 13.0

Doors: 206B, 206G

3	Hinge, Full Mortise	TA2714-MCK (NRP)	US26D	MK	087100
1	Institutional Privacy Lock (w/ outside indicator)	ML2069 NSA M34 V20 LC	626	RU	087100
1	Mort. Cylinder	- match Owner's Medeco X4 Key System	19	MC	087100

1	Surface Closer	7500 (PA or RA as required)	689	NO	087100
1	Kick Plate	K1050 10" high CSK BEV	US32D	RO	087100
1	Wall Stop	RM860	US32D	RO	087100
3	Silencer	608 / 609		RO	087100

Notes:

Set: 14.0

Doors: 206

6	Hinge (heavy weight)	T4A3786 (NRP)	US26D	MK	087100
2	Flush Bolt	555	US26D	RO	087100
1	Dust Proof Strike	570	US26D	RO	087100
1	Classroom Lock	ML2055 NSA LC	626	RU	087100
1	Mort. Cylinder	- match Owner's Medeco X4 Key System	19	MC	087100
2	Concealed Overhead Stop	2-X36	652	NO	087100
2	Surface Closer	7500 (PA or RA as required)	689	NO	087100
2	Mounting Plate	7786OH	689	NO	087100

Notes:

Set: 15.0

Doors: 121D.2

3	Hinge (heavy weight)	T4A3786 (NRP)	US26D	MK	087100
1	Classroom Intruder Lock (w/ inside indicator)	ML2052 VNN V01 LC	626	RU	087100
2	Mort. Cylinder	- match Owner's Medeco X4 Key System	19	MC	087100
1	Surface Closer	7500 (PA or RA as required)	689	NO	087100
1	Kick Plate	K1050 10" high CSK BEV	US32D	RO	087100
1	Wall Stop	RM860	US32D	RO	087100
1	Smoke / Sound Seal	S88BL - head and jambs		PE	087100

Notes:

Set: 16.0

Doors: 121F.1

3	Hinge (heavy weight)	T4A3786 (NRP)	US26D	MK	087100
1	Storeroom Lock	ML2057 NSA LC	626	RU	087100
1	Mort. Cylinder	- match Owner's Medeco X4 Key System	19	MC	087100
1	Surface Closer	7500 (PA or RA as required)	689	NO	087100
1	Kick Plate	K1050 10" high CSK BEV	US32D	RO	087100
1	Wall Stop	RM860	US32D	RO	087100
1	Smoke / Sound Seal	S88BL - head and jambs		PE	087100

Set: 17.0

Doors: 206S

3	Hinge, Full Mortise	TA2714-MCK (NRP)	US26D	MK	087100
1	Classroom Lock	ML2055 NSA LC	626	RU	087100
1	Mort. Cylinder	- match Owner's Medeco X4 Key System	19	MC	087100
1	Concealed Overhead Stop	2-X36	652	NO	087100
3	Silencer	608 / 609		RO	087100

END OF SECTION 080671

SECTION 081113 - HOLLOW METAL DOORS AND FRAMES

PART 1 - GENERAL

1.1 RELATED DOCUMENTS

A. Drawings and general provisions of the Contract, including General and Supplementary Conditions and Division 01 Specification Sections, apply to this Section.

1.2 SUMMARY

A. Section Includes:

1. Standard and custom hollow metal doors and frames.
2. Steel sidelight, borrowed lite and transom frames.
3. Louvers installed in hollow metal doors.
4. Light frames and glazing installed in hollow metal doors.

B. Related Sections:

1. Division 01 Section "Sustainable Design Requirements".
2. Division 01 Section "General Conditions".
3. Division 04 Section "Masonry".
4. Division 06 Section "Rough Carpentry".
5. Division 06 Section "Finish Carpentry".
6. Division 08 Section "Operations and Maintenance".
7. Division 08 Section "Door Hardware Schedule".
8. Division 08 Section "Aluminum-Framed Entrances and Storefronts".
9. Division 08 Section "Glazing".
10. Division 08 Section "Door Hardware".
11. Division 09 Sections "Painting".
12. Division 26 Section "Electrical"

C. Codes and References: Comply with the version year adopted by the Authority Having Jurisdiction.

1. ANSI/SDI A250.8 - Recommended Specifications for Standard Steel Doors and Frames.
2. ANSI/SDI A250.4 - Test Procedure and Acceptance Criteria for Physical Endurance for Steel Doors, Frames, Frames Anchors and Hardware Reinforcing.
3. ANSI/SDI A250.6 - Recommended Practice for Hardware Reinforcing on Standard Steel Doors and Frames.
4. ANSI/SDI A250.10 - Test Procedure and Acceptance Criteria for Prime Painted Steel Surfaces for Steel Doors and Frames.
5. ANSI/SDI A250.11 - Recommended Erection Instructions for Steel Frames.
6. ASTM A1008 - Standard Specification for Steel Sheet, Cold-Rolled, Carbon, Structural, High-Strength Low-Alloy and High-Strength Low-Alloy with Improved Formability.
7. ASTM A653 - Standard Specification for Steel Sheet, Zinc-Coated (Galvanized) or Zinc-Iron Alloy-Coated (Galvannealed) by the Hot-Dip Process.
8. ASTM A924 - Standard Specification for General Requirements for Steel Sheet, Metallic-Coated by the Hot-Dip Process.

9. SDI-113 Standard Practice for Determining the Steady-State Thermal Transmittance of Steel Door & Frame Assemblies.
10. ASTM C 1363 - Standard Test Method for Thermal Performance of Building Assemblies by Means of a Hot Box Apparatus.
11. ASTM C1199 - Standard Test Method for Measuring the Steady-State Thermal Transmittance of Fenestration Systems Using Hot Box Methods
12. ASTM E1423 - Practice for Determining Steady State Thermal Transmittance of Fenestration Systems.
13. ANSI/BHMA A156.115 - Hardware Preparation in Steel Doors and Frames.
14. ANSI/SDI 122 - Installation and Troubleshooting Guide for Standard Steel Doors and Frames.
15. ANSI/NFPA 80 - Standard for Fire Doors and Fire Windows; National Fire Protection Association.
16. ANSI/NFPA 105: Standard for the Installation of Smoke Door Assemblies.
17. NFPA 252 - Standard Methods of Fire Tests of Door Assemblies; National Fire Protection Association.
18. UL 10C - Positive Pressure Fire Tests of Door Assemblies.
19. UL 1784 - Standard for Air Leakage Tests of Door Assemblies.

1.3 SUBMITTALS

A. Product Data: For each type of product indicated. Include construction details, material descriptions, core descriptions, hardware reinforcements, profiles, anchors, fire-resistance rating, and finishes.

B. Door hardware supplier is to furnish templates, template reference number and/or physical hardware to the steel door and frame supplier in order to prepare the doors and frames to receive the finish hardware items.

C. Shop Drawings: Include the following:

1. Elevations of each door design.
2. Details of doors, including vertical and horizontal edge details and metal thicknesses.
3. Frame details for each frame type, including dimensioned profiles and metal thicknesses.
4. Locations of reinforcement and preparations for hardware.
5. Details of anchorages, joints, field splices, and connections.
6. Details of accessories.
7. Details of moldings, removable stops, and glazing.
8. Details of conduit and preparations for power, signal, and control systems.

D. Samples for Verification:

1. Samples are only required by request of the architect and for manufacturers that are not current members of the Steel Door Institute.

E. Informational Submittals:

1.4 QUALITY ASSURANCE

A. Source Limitations: Obtain hollow metal doors and frames through one source from a single manufacturer wherever possible.

B. Quality Standard: In addition to requirements specified, furnish SDI-Certified manufacturer products that comply with ANSI/SDI A250.8, latest edition, "Recommended Specifications for Standard Steel Doors and Frames".

C. Fire-Rated Door Assemblies: Assemblies complying with NFPA 80 that are listed and labeled by a qualified testing agency, for fire-protection ratings indicated, based on testing at positive pressure according to UL10C (neutral pressure at 40” above sill) or UL 10C.

1. Oversize Fire-Rated Door Assemblies Construction: For units exceeding sizes of tested assemblies, attach construction label certifying doors are built to standard construction requirements for tested and labeled fire rated door assemblies except for size.
2. Temperature-Rise Limit: Where indicated and at vertical exit enclosures (stairwell openings) and exit passageways, provide doors that have a maximum transmitted temperature end point of not more than 450 deg F (250 deg C) above ambient after 30 minutes of standard fire-test exposure.
3. Smoke Control Door Assemblies: Comply with NFPA 105.

a. Smoke "S" Label: Doors to bear “S” label and include smoke and draft control gasketing applied to frame and on meeting stiles of pair doors.

D. Fire-Rated, Borrowed-Light Frame Assemblies: Assemblies complying with NFPA 80 that are listed and labeled, by a testing and inspecting agency acceptable to authorities having jurisdiction, for fire-protection ratings indicated, based on testing according to NFPA 257. Provide labeled glazing material.

E. Pre-Submittal Conference: Conduct conference in compliance with requirements in Division 01 Section "Project Meetings" with attendance by representatives of Supplier, Installer, and Contractor to review proper methods and procedures for installing hollow metal doors and frames and to verify installation of electrical knockout boxes and conduit at frames with electrified or access control hardware.

1.5 DELIVERY, STORAGE, AND HANDLING

A. Deliver hollow metal work palletized, wrapped, or crated to provide protection during transit and Project site storage. Do not use non-vented plastic.

B. Deliver welded frames with two removable spreader bars across bottom of frames, tack welded to jambs and mullions.

C. Store hollow metal work under cover at Project site. Place in stacks of five units maximum in a vertical position with heads up, spaced by blocking, on minimum 4-inch high wood blocking. Do not store in a manner that traps excess humidity.

1. Provide minimum 1/4-inch space between each stacked door to permit air circulation. Door and frames to be stacked in a vertical upright position.

1.6 PROJECT CONDITIONS

A. Field Measurements: Verify actual dimensions of openings by field measurements before fabrication.

1.7 COORDINATION

A. Coordinate installation of anchorages for hollow metal frames. Furnish setting drawings, templates, and directions for installing anchorages, including sleeves, concrete inserts, anchor bolts, and items with integral anchors. Deliver such items to Project site in time for installation.

B. Building Information Modeling (BIM) Support: Utilize designated BIM software tools and obtain training needed to successfully participate in the Project BIM processes. All technical disciplines are responsible for the product data integration and data reliability of their Work into the coordinated BIM applications.

1.8 WARRANTY

A. Special Warranty: Manufacturer's standard form in which manufacturer agrees to repair or replace doors that fail in materials or workmanship within specified warranty period.

B. Warranty includes installation and finishing that may be required due to repair or replacement of defective doors.

PART 2 - PRODUCTS

2.1 MANUFACTURERS

A. Manufacturers: Subject to compliance with requirements, provide steel doors and frames from a SDI Certified manufacturer:

1. CECO Door Products (C).
2. Curries Company (CU).
3. Steelcraft (S).

2.2 MATERIALS

A. Cold-Rolled Steel Sheet: ASTM A 1008/A 1008M, Commercial Steel (CS), Type B; suitable for exposed applications.

B. Metallic-Coated Steel Sheet: ASTM A 653/A 653M, Commercial Steel (CS), Type B; with minimum G60 (Z180) or A60 (ZF180) metallic coating.

C. Frame Anchors: ASTM A 653/A 653M, Commercial Steel (CS), Commercial Steel (CS), Type B; with minimum G60 (Z180) or A60 (ZF180) metallic coating.

2.3 HOLLOW METAL DOORS

A. General: Provide 1-3/4 inch doors of design indicated, not less than thickness indicated; fabricated with smooth surfaces, without visible joints or seams on exposed faces unless otherwise indicated. Comply with ANSI/SDI A250.8 and ANSI/NAAMM HMMA 867.

B. Exterior Doors: Face sheets fabricated of commercial quality hot-dipped zinc coated steel that complies with ASTM A 653/A 653M, Coating Designation A60. Provide doors complying with requirements indicated below by referencing ANSI/SDI A250.8 for level and model and ANSI/SDI A250.4 for physical performance level:

1. Design: Flush panel.
2. Core Construction: Manufacturer's thermally enhanced QMax core. Where indicated provide doors fabricated as thermal-rated assemblies with a minimum operable thermal rating of 0.35 BTU/hr-ft2-F.
3. Level/Model: Level 3 and Physical Performance Level A (Extra Heavy Duty), Minimum 16 gauge (0.053-inch - 1.3-mm) thick steel, Model 2.
4. Vertical Edges: Vertical edges to have the face sheets joined by a continuous weld extending the full height of the door. Welds are to be ground, filled and dressed smooth. Beveled Lock Edge, 1/8 inch in 2 inches (3 mm in 50 mm).
5. Top and Bottom Edges: Reinforce tops and bottoms of doors with a continuous steel channel not less than 16 gauge, extending the full width of the door and welded to the face sheet. Doors with an inverted top channel to include a steel closure channel, screw attached, with the web of the channel flush with the face sheets of the door. Plastic or composite channel fillers are not acceptable.
6. Hinge Reinforcement: Minimum 7 gauge (3/16") plate 1-1/4" x 9" or minimum 14 gauge continuous channel with pierced holes, drilled and tapped.
7. Hardware Reinforcements: Fabricate according to ANSI/SDI A250.6 with reinforcing plates from same material as door face sheets.

C. Interior Doors: Face sheets fabricated of commercial quality cold rolled steel that complies with ASTM A 1008/A 1008M. Provide doors complying with requirements indicated below by referencing ANSI/SDI A250.8 for level and model and ANSI/SDI A250.4 for physical performance level:

1. Design: Flush panel.

   a. Fire Door Core: As required to provide fire-protection and temperature-rise ratings indicated.

2. Level/Model: Level 2 and Physical Performance Level B (Heavy Duty), Minimum 18 gauge (0.042-inch - 1.0-mm) thick steel, Model 2.
3. Vertical Edges: Vertical edges to have the face sheets spot welded and filled full height with an epoxy filler. Welds are to be ground, filled and dressed smooth. Beveled Lock Edge, 1/8 inch in 2 inches (3 mm in 50 mm).
4. Top and Bottom Edges: Reinforce tops and bottoms of doors with a continuous steel channel not less than 16 gauge, extending the full width of the door and welded to the face sheet.
5. Hinge Reinforcement: Minimum 7 gauge (3/16") plate 1-1/4" x 9" or minimum 14 gauge continuous channel with pierced holes, drilled and tapped.
6. Hardware Reinforcements: Fabricate according to ANSI/SDI A250.6 with reinforcing plates from same material as door face sheets.

D. Manufacturers Basis of Design:

1. Curries Company (CU) - Polystyrene Core - 707 Series.
2. Curries Company (CU) - QMax Core - 707 Series.

2.4 HOLLOW METAL FRAMES

A. General: Comply with ANSI/SDI A250.8 and with details indicated for type and profile.

B. Thermal Break Frames: Subject to the same compliance standards and requirements as standard hollow metal frames. Tested for thermal performance in accordance with SDI-113, ASTM C1363, ASTM C1119, ASTM E1423, NFRC 102 and resistance to air infiltration in

accordance with ASTM-E283. Where indicated provide thermally broken frame profiles available for use in both masonry and drywall construction. Fabricate with 1/16" positive thermal break and integral vinyl weatherstripping.

C. Exterior Frames: Fabricated of hot-dipped zinc coated steel that complies with ASTM A 653/A 653M, Coating Designation A60.

1. Fabricate frames with mitered or coped corners. Profile as indicated on drawings.
2. Frames: Minimum 14 gauge (0.067-inch -1.7-mm) thick steel sheet.
3. Manufacturers Basis of Design:

a. Curries Company (CU) - Mercury 3 Thermal Break TQ Series.

D. Interior Frames: Fabricated from cold-rolled steel sheet that complies with ASTM A 1008/A 1008M.

1. Fabricate frames with mitered or coped corners. Profile as indicated on drawings.
2. Frames: Minimum 16 gauge (0.053-inch -1.3-mm) thick steel sheet.
3. Manufacturers Basis of Design:

a. Curries Company (CU) - C Series.
b. Curries Company (CU) - M Series.

E. Fire rated frames: Fabricate frames in accordance with NFPA 80, listed and labeled by a qualified testing agency, for fire-protection ratings indicated.

F. Hardware Reinforcement: Fabricate according to ANSI/SDI A250.6 Table 4 with reinforcement plates from same material as frames.

2.5 FRAME ANCHORS

A. Jamb Anchors:

1. Masonry Type: Adjustable strap-and-stirrup or T-shaped anchors to suit frame size, formed from A60 metallic coated material, not less than 0.042 inch thick, with corrugated or perforated straps not less than 2 inches wide by 10 inches long; or wire anchors not less than 0.177 inch thick.
2. Stud Wall Type: Designed to engage stud and not less than 0.042 inch thick.
3. Compression Type for Drywall Slip-on (Knock-Down) Frames: Adjustable compression anchors.

B. Floor Anchors: Floor anchors to be provided at each jamb, formed from A60 metallic coated material, not less than 0.042 inches thick.

C. Mortar Guards: Formed from same material as frames, not less than 0.016 inches thick.

2.6 LIGHT OPENINGS AND GLAZING

A. Stops and Moldings: Provide stops and moldings around glazed lites where indicated. Form corners of stops and moldings with butted or mitered hairline joints at fabricator's shop. Fixed and removable stops to allow multiple glazed lites each to be removed independently. Coordinate frame rabbet widths between fixed and removable stops with the type of glazing and installation indicated.

B. Moldings for Glazed Lites in Doors and Loose Stops for Glazed Lites in Frames: Minimum 20 gauge thick, fabricated from same material as door face sheet in which they are installed.

C. Fixed Frame Moldings: Formed integral with hollow metal frames, a minimum of 5/8 inch (16 mm) high unless otherwise indicated. Provide fixed frame moldings and stops on outside of exterior and on secure side of interior doors and frames.

D. Preformed Metal Frames for Light Openings: Manufacturer's standard frame formed of 0.048-inch-thick, cold rolled steel sheet; with baked enamel or powder coated finish; and approved for use in doors of fire protection rating indicated. Match pre-finished door paint color where applicable.

2.7 ACCESSORIES

A. Mullions and Transom Bars: Join to adjacent members by welding or rigid mechanical anchors.

B. Grout Guards: Formed from same material as frames, not less than 0.016 inches thick.

2.8 FABRICATION

A. Fabricate hollow metal work to be rigid and free of defects, warp, or buckle. Accurately form metal to required sizes and profiles, with minimum radius for thickness of metal. Where practical, fit and assemble units in manufacturer's plant. When shipping limitations so dictate, frames for large openings are to be fabricated in sections for splicing or splining in the field by others.

B. Tolerances: Fabricate hollow metal work to tolerances indicated in ANSI/SDI A250.8.

C. Hollow Metal Doors:

1. Exterior Doors: Provide optional weep-hole openings in bottom of exterior doors to permit moisture to escape where specified.
2. Glazed Lites: Factory cut openings in doors with applied trim or kits to fit. Factory install glazing where indicated.
3. Astragals: Provide overlapping astragals as noted in door hardware sets in Division 08 Section "Door Hardware" on one leaf of pairs of doors where required by NFPA 80 for fire-performance rating or where indicated. Extend minimum 3/4 inch beyond edge of door on which astragal is mounted.
4. Continuous Hinge Reinforcement: Provide welded continuous 12 gauge strap for continuous hinges specified in hardware sets in Division 08 Section "Door Hardware".

D. Hollow Metal Frames:

1. Shipping Limitations: Where frames are fabricated in sections due to shipping or handling limitations, provide alignment plates or angles at each joint, fabricated of same thickness metal as frames.
2. Welded Frames: Weld flush face joints continuously; grind, fill, dress, and make smooth, flush, and invisible.

   a. Welded frames are to be provided with two steel spreaders temporarily attached to the bottom of both jambs to serve as a brace during shipping and handling. Spreader bars are for bracing only and are not to be used to size the frame opening.

3. Sidelight and Transom Bar Frames: Provide closed tubular members with no visible face seams or joints, fabricated from same material as door frame. Fasten members at crossings and to jambs by butt welding.
4. High Frequency Hinge Reinforcement: Provide high frequency hinge reinforcements at door openings 48-inches and wider with mortise butt type hinges at top hinge locations.
5. Continuous Hinge Reinforcement: Provide welded continuous 12 gauge straps for continuous hinges specified in hardware sets in Division 08 Section "Door Hardware".
6. Provide countersunk, flat- or oval-head exposed screws and bolts for exposed fasteners unless otherwise indicated for removable stops, provide security screws at exterior locations.
7. Mortar Guards: Provide guard boxes at back of hardware mortises in frames at all hinges and strike preps regardless of grouting requirements.
8. Floor Anchors: Weld anchors to bottom of jambs and mullions with at least four spot welds per anchor.
9. Jamb Anchors: Provide number and spacing of anchors as follows:

    a. Masonry Type: Locate anchors not more than 18 inches from top and bottom of frame. Space anchors not more than 32 inches on-center and as follows:

        1) Two anchors per jamb up to 60 inches high.
        2) Three anchors per jamb from 60 to 90 inches high.
        3) Four anchors per jamb from 90 to 120 inches high.
        4) Four anchors per jamb plus 1 additional anchor per jamb for each 24 inches or fraction thereof above 120 inches high.

    b. Stud Wall Type: Locate anchors not more than 18 inches from top and bottom of frame. Space anchors not more than 32 inches o.c. and as follows:

        1) Three anchors per jamb up to 60 inches high.
        2) Four anchors per jamb from 60 to 90 inches high.
        3) Five anchors per jamb from 90 to 96 inches high.
        4) Five anchors per jamb plus 1 additional anchor per jamb for each 24 inches or fraction thereof above 96 inches high.
        5) Two anchors per head for frames above 42 inches wide and mounted in metal stud partitions.
10. Door Silencers: Except on weatherstripped or gasketed doors, drill stops to receive door silencers. Silencers to be supplied by frame manufacturer regardless if specified in Division 08 Section "Door Hardware".
11. Bituminous Coating: Where frames are fully grouted with an approved Portland Cement based grout or mortar, coat inside of frame throat with a water based bituminous or asphaltic emulsion coating to a minimum thickness of 3 mils DFT, tested in accordance with UL 10C and applied to the frame under a 3rd party independent follow-up service procedure.

E. Hardware Preparation: Factory prepare hollow metal work to receive template mortised hardware; include cutouts, reinforcement, mortising, drilling, and tapping according to the Door Hardware Schedule and templates furnished as specified in Division 08 Section "Door Hardware."

1. Locate hardware as indicated, or if not indicated, according to ANSI/SDI A250.8.
2. Reinforce doors and frames to receive non-template, mortised and surface mounted door hardware.
3. Comply with applicable requirements in ANSI/SDI A250.6 and ANSI/DHI A115 Series specifications for preparation of hollow metal work for hardware.
4. Coordinate locations of conduit and wiring boxes for electrical connections with Division 26 Sections.

2.9 STEEL FINISHES

A. Prime Finishes: Doors and frames to be cleaned, and chemically treated to insure maximum finish paint adhesion. Surfaces of the door and frame exposed to view to receive a factory applied coat of rust inhibiting shop primer.

1. Shop Primer: Manufacturer's standard, fast-curing, lead and chromate free primer complying with ANSI/SDI A250.10 acceptance criteria; recommended by primer manufacturer for substrate; and compatible with substrate and field-applied coatings.

PART 3 - EXECUTION

3.1 EXAMINATION

A. Examine substrates, areas, and conditions, with Installer present, for compliance with requirements for installation tolerances and other conditions affecting performance of the Work.

B. General Contractor to verify the accuracy of dimensions given to the steel door and frame manufacturer for existing openings or existing frames (strike height, hinge spacing, hinge back set, etc.).

C. Proceed with installation only after unsatisfactory conditions have been corrected.

3.2 PREPARATION

A. Remove welded in shipping spreaders installed at factory. Restore exposed finish by grinding, filling, and dressing, as required to make repaired area smooth, flush, and invisible on exposed faces.

B. Prior to installation, adjust and securely brace welded hollow metal frames for square, level, twist, and plumb condition.

C. Tolerances shall comply with SDI-117 "Manufacturing Tolerances Standard Steel Doors and Frames."

D. Drill and tap doors and frames to receive non-template, mortised, and surface-mounted door hardware.

E. Verify tolerances against manufacturers installations instructions for tornado and hurricane storm shelter openings.

3.3 INSTALLATION

A. General: Install hollow metal work plumb, rigid, properly aligned, and securely fastened in place; comply with Drawings and manufacturer's written instructions.

B. Hollow Metal Frames: Install hollow metal frames of size and profile indicated. Comply with ANSI/SDI A250.11 and NFPA 80 at fire rated openings.

1. Set frames accurately in position, plumbed, leveled, aligned, and braced securely until permanent anchors are set. After wall construction is complete and frames properly set and

secured, remove temporary braces, leaving surfaces smooth and undamaged. Shim as necessary to comply with installation tolerances.

2. Floor Anchors: Provide floor anchors for each jamb and mullion that extends to floor, and secure with post-installed expansion anchors.
3. Masonry Walls: Coordinate installation of frames to allow for solidly filling space between frames and masonry with mortar.
4. Grout Requirements: Do not grout head of frames unless reinforcing has been installed in head of frame. Do not grout vertical or horizontal closed mullion members.

C. Hollow Metal Doors: Fit hollow metal doors accurately in frames, within clearances specified below. Shim as necessary.

1. Non-Fire-Rated Standard Steel Doors:

a. Jambs and Head: 1/8 inch plus or minus 1/16 inch.
b. Between Edges of Pairs of Doors: 1/8 inch plus or minus 1/16 inch.
c. Between Bottom of Door and Top of Threshold: Maximum 3/8 inch.
d. Between Bottom of Door and Top of Finish Floor (No Threshold): Maximum 3/4 inch.

2. Fire-Rated Doors: Install doors with clearances according to NFPA 80.

D. Field Glazing: Comply with installation requirements in Division 08 Section "Glazing" and with hollow metal manufacturer's written instructions.

3.4 ADJUSTING AND CLEANING

A. Final Adjustments: Check and readjust operating hardware items immediately before final inspection. Leave work in complete and proper operating condition. Remove and replace defective work, including hollow metal work that is warped, bowed, or otherwise unacceptable.

B. Remove grout and other bonding material from hollow metal work immediately after installation.

C. Prime-Coat and Painted Finish Touchup: Immediately after erection, sand smooth rusted or damaged areas of prime coat, or painted finishes, and apply touchup of compatible air drying, rust-inhibitive primer, zinc rich primer (exterior and galvanized openings) or finish paint.

3.5 FIELD QUALITY CONTROL

A. Field Inspection (Punch Report): Reference Division 01 Sections “Closeout Procedures”. Produce project punch report for each installed door opening indicating compliance with approved submittals and verification hardware is properly installed, operating and adjusted. Include list of items to be completed and corrected, indicating the reasons or deficiencies causing the Work to be incomplete or rejected.

1. Organization of List: Include separate Door Opening and Deficiencies and Corrective Action Lists organized by Mark, Opening Remarks and Comments, and related Opening Images and Video Recordings.

END OF SECTION 081113

SECTION 081416 - FLUSH WOOD DOORS

PART 1 - GENERAL

1.1 RELATED DOCUMENTS

A. Drawings and general provisions of the Contract, including General and Supplementary Conditions and Division 01 Specification Sections, apply to this Section.

1.2 SUMMARY

A. Section Includes:

1. Five-ply flush wood veneer-faced doors for transparent finish.
2. Factory finishing flush wood doors.
3. Factory fitting flush wood doors to frames and factory machining for hardware.

B. Related Sections:

1. Section 088000 “Glazing.”
2. Section 087100 “Door Hardware.”
3. Section 081113 “Hollow Metal Doors and Frames” (if applicable).

1.3 ACTION SUBMITTALS

A. Product Data: For each type of product, including the following:

1. Door core materials and construction.
2. Door edge construction
3. Door face type and characteristics.
4. Door trim for openings.
5. Factory-machining criteria.
6. Factory- finishing specifications.

B. Shop Drawings: Indicate location, size, and hand of each door; elevation of each type of door; construction details not covered in Product Data; and the following:

1. Door schedule indicating door and frame location, type, size, fire protection rating, and swing.
2. Door elevations, dimension and locations of hardware, lite and louver cutouts, and glazing thicknesses.
3. Details of frame for each frame type, including dimensions and profile.
4. Dimensions and locations of blocking for hardware attachment.
5. Dimensions and locations of mortises and holes for hardware.
6. Clearances and undercuts.
7. Requirements for veneer matching.
8. Doors to be factory finished and application requirements.
9. Apply AWI Quality Certification Program label to Shop Drawings.

10. Indicate glazing type designation consistent with Section 088000 “Glazing.”

C. Samples for Initial Selection: For factory-finished doors.

1.4 INFORMATIONAL SUBMITTALS

A. Sample Warranty: For special warranty.

1.5 CLOSEOUT SUBMITTALS

A. Special warranties.

B. Quality Standard Compliance Certificates: AWI Quality Certification Program certificates.

1.6 QUALITY ASSURANCE

A. Manufacturer's Certification: Licensed participant in AWI's Quality Certification Program .

1.7 DELIVERY, STORAGE, AND HANDLING

A. Comply with requirements of referenced standard and manufacturer's written instructions.

B. Package doors individually in plastic bags or cardboard cartons .

C. Mark each door on top and bottom rail with opening number used on Shop Drawings.

1.8 FIELD CONDITIONS

A. Environmental Limitations: Do not deliver or install doors until spaces are enclosed and weathertight, wet-work in spaces is complete and dry, and HVAC system is operating and maintaining temperature and relative humidity at levels designed for building occupants for the remainder of construction period.

1.9 WARRANTY

A. Special Warranty: Manufacturer agrees to repair or replace doors that fail in materials or workmanship within specified warranty period.

1. Failures include, but are not limited to, the following:
   a. Delamination of veneer.
   b. Warping (bow, cup, or twist) more than 1/4 inch in a 42-by-84-inch section.
   c. Telegraphing of core construction in face veneers exceeding 0.01 inch in a 3-inch span.
2. Warranty shall also include installation and finishing that may be required due to repair or replacement of defective doors.
3. Warranty Period for Solid-Core Interior Doors: Life of installation.

PART 2 - PRODUCTS

2.1 MANUFACTURERS

A. Source Limitations: Obtain flush wood doors from single manufacturer.

2.2 PERFORMANCE REQUIREMENTS

A. Fire-Rated Wood Door Assemblies: Assemblies complying with NFPA 80 that are listed and labeled by a qualified testing agency acceptable to authorities having jurisdiction, for fire-protection ratings indicated on Drawings, based on testing at positive pressure in accordance with NFPA 252.

2.3 FLUSH WOOD DOORS, GENERAL

A. Quality Standard: In addition to requirements specified, comply with AWI/AWMAC/WI's "Architectural Woodwork Standards."

1. Provide labels and certificates from AWI certification program indicating that doors comply with requirements of grades specified.
2. The Contract Documents contain requirements that are more stringent than the referenced quality standard. Comply with the Contract Documents in addition to those of the referenced quality standard.

2.4 SOLID-CORE FIVE-PLY FLUSH WOOD VENEER-FACED DOORS FOR TRANSPARENT FINISH

A. Interior Doors :

1. Manufacturers: Subject to compliance with requirements, provide products by one of the following:
   a. Eggers Industries.
   b. Masonite Architectural.
   c. VT Industries Inc.
   d. Or Approved Equal.
2. Performance Grade: ANSI/WDMA I.S. 1A Heavy Duty .
3. Performance Grade:
   a. ANSI/WDMA I.S. 1A Heavy Duty unless otherwise indicated on Drawings.
4. Architectural Woodwork Standards Grade: Premium .
5. Faces: Single-ply wood veneer not less than 1/50 inch thick.
   a. Species: Red oak .
   b. Cut: Plain sliced (flat sliced) .
   c. Match between Veneer Leaves: Book match.
   d. Assembly of Veneer Leaves on Door Faces: Running match.
   e. Pair and Set Match: Provide for doors hung in same opening.
   f. Room Match: Provide door faces of compatible color and grain within each separate room or area of building.
6. Core for Fire-Rated Doors: As required to achieve fire-protection rating indicated on Drawings.

a. Blocking for Mineral-Core Doors: Provide composite blocking with improved screw-holding capability approved for use in doors of fire-protection ratings indicated on Drawings as follows:
   1) 5-inch top-rail blocking.
   2) 5-inch bottom-rail blocking, in doors indicated to have protection plates.
   3) 5-inch midrail blocking, in doors indicated to have armor plates.
   4) 5-inch midrail blocking, in doors indicated to have exit devices.

7. Construction: Five plies, hot-pressed bonded (vertical and horizontal edging is bonded to core), with entire unit abrasive planed before veneering.

2.5 LIGHT FRAMES AND LOUVERS

A. Metal Frames for Light Openings in Fire-Rated Doors: Manufacturer's standard frame formed of 0.048-inch- thick, cold-rolled steel sheet; factory primed for paint finish; and approved for use in doors of fire-protection rating indicated on Drawings.

B. Glazing materials used in fire-rated door assemblies shall have a fire-protection rating equal to or greater than that required for the door vision panel as indicated on the Drawings.

C. Wood Beads for Light Openings in Wood Doors: Provide manufacturer's standard wood beads unless otherwise indicated.

   1. Wood Species: Same species as door faces .
   2. Profile: Flush rectangular beads .
   3. At wood-core doors with 20-minute fire-protection ratings, provide wood beads and metal glazing clips approved for such use.

2.6 FABRICATION

A. Factory fit doors to suit frame-opening sizes indicated.

   1. Comply with clearance requirements of referenced quality standard for fitting unless otherwise indicated.
   2. Comply with NFPA 80 requirements for fire-rated doors.

B. Factory machine doors for hardware that is not surface applied.

   1. Locate hardware to comply with DHI-WDHS-3.
   2. Comply with final hardware schedules, door frame Shop Drawings, ANSI/BHMA-156.115-W, and hardware templates.
   3. Coordinate with hardware mortises in metal frames, to verify dimensions and alignment before factory machining.
   4. For doors scheduled to receive electrified locksets, provide factory-installed raceway and wiring to accommodate specified hardware.

C. Transom and Side Panels:

   1. Fabricate matching panels with same construction, exposed surfaces, and finish as specified for associated doors.
   2. Finish bottom edges of transoms and top edges of rabbeted doors same as door stiles.
   3. Fabricate door and transom panels with full-width, solid-lumber meeting rails.

4. Provide factory-installed spring bolts for concealed attachment into jambs of metal door frames.

D. Openings: Factory cut and trim openings through doors.

1. Light Openings: Trim openings with moldings of material and profile indicated.
2. Glazing: Comply with Section 088000 “Glazing” for glass materials and installation requirements, except that glazing used in fire-rated door assemblies shall be limited to products specifically listed in the door manufacturer’s NFPA 80–compliant fire-rated assembly. Glazing materials, beads, and clips shall be compatible with door finish and shall not discolor, stain, or chemically react with adjoining materials.

2.7 FACTORY FINISHING

A. Comply with referenced quality standard for factory finishing.

1. Complete fabrication, including fitting doors for openings and machining for hardware that is not surface applied, before finishing.
2. Finish faces, all four edges, edges of cutouts, and mortises.

B. Factory finish doors.

C. Transparent Finish:

1. Architectural Woodwork Standards Grade: Premium.
2. Finish: Architectural Woodwork Standards System-9, UV Curable, Acrylated Epoxy, Polyester or Urethane.
3. Staining: As selected by Architect from manufacturer's full range.
4. Effect: Open-grain finish.
5. Sheen: Satin.

PART 3 - EXECUTION

3.1 EXAMINATION

A. Examine doors and installed door frames, with Installer present, before hanging doors.

1. Verify that installed frames comply with indicated requirements for type, size, location, and swing characteristics and have been installed with level heads and plumb jambs.
2. Reject doors with defects.

B. Proceed with installation only after unsatisfactory conditions have been corrected.

3.2 INSTALLATION

A. Hardware: For installation, see Section 087100 "Door Hardware."

B. Install doors to comply with manufacturer's written instructions and referenced quality standard, and as indicated.

C. Install frames level, plumb, true, and straight.

1. Shim as required with concealed shims. Install level and plumb to a tolerance of 1/8 inch in 96 inches.
2. Anchor frames to anchors or blocking built in or directly attached to substrates.
   a. Secure with countersunk, concealed fasteners and blind nailing.
   b. Use fine finishing nails or finishing screws for exposed fastening, countersunk and filled flush with woodwork.
      1) For factory-finished items, use filler matching finish of items being installed.

D. Factory-Fitted Doors: Align in frames for uniform clearance at each edge.

E. Factory-Finished Doors: Restore finish before installation if fitting or machining is required at Project site.

3.3 ADJUSTING

A. Operation: Rehang or replace doors that do not swing or operate freely.

B. Finished Doors: Replace doors that are damaged or that do not comply with requirements. Doors may be repaired or refinished if Work complies with requirements and shows no evidence of repair or refinishing.

END OF SECTION 081416

SECTION 083400 (TES) - SPECIAL FUNCTION DOORS

PART 1 - GENERAL

1.01 RELATED DOCUMENTS

A. Drawings and general provisions of the Contract, including General and Supplementary Conditions and Division 01 Specification Sections, apply to this Section.

1.02 SUMMARY

A. Section includes:

1. Interior Aluminum-Framed Top-Hung Sliding Doors

1.03 REFERENCES

A. ANSI – American National Standards Institute

1. ANSI 156.18 Materials and Finishes
2. ANSI A117.1 Specifications for making buildings and facilities usable by physically handicapped people.

B. BHMA – Builders Hardware Manufacturers Association

C. DHI – Door and Hardware Institute

D. NFPA – National Fire Protection Association

1. NFPA 80 – Fire Doors and Windows
2. NFPA 101 – Life Safety code
3. NFPA 105 – Smoke and Draft Control Door Assemblies
4. NFPA 252 – Fire Tests of Doors Assemblies

E. AWS – Architectural Woodwork Standards

1.04 SUBMITTALS

A. Comply with Section 01 33 00 – Submittal Procedures

B. Product Data: Submit manufacturer's product data, including installation instructions.

C. Shop Drawings: Submit manufacturer's shop drawings, including plans, elevations, sections, and details, indicating dimensions, tolerances, materials, components, hardware, finish, options, and accessories. Shop Drawings to show required blocking by others.

D. Samples: Submit manufacturer's samples of the following sliding door components:

1. Door veneer or laminate sample.
2. Aluminum Frame finish sample.

E. Manufacturer’s Certification: Submit manufacturer’s certification that materials comply with specified requirements and are suitable for intended application.

F. Warranty Documentation: Submit manufacturer’s standard warranty.

G. Test Reports: Submit acoustical reports or UL1784 as applicable.

1.05 QUALITY ASSURANCE

A. Product Options: Drawings indicate size, profiles, and dimensional requirements of interior aluminum frames and doors.

B. Source: Obtain sliding aluminum framed doors and hardware from single source.

C. Manufacturer's Qualifications: Manufacturer regularly engaged for past 5 years in manufacture of sliding doors similar to that specified.

1.06 PERFORMANCE

A. Aluminum perimeter frames with integral acoustic seals at all door/frame interfaces

1. Architect to verify frame thickness suitable for required application

B. Soft-closing mechanism at both sides of door integrated with top track. Soft Closers tested to a minimum of 150,000 cycles.

C. Concealed door guide.

D. Manufacturer to 3rd party acoustical performance test data

E. Manufacturer to submit 3rd party test data on air infiltration and/or smoke ratings as applicable

1.07 DELIVERY, STORAGE, AND HANDLING

A. Delivery and Acceptance Requirements: Deliver materials to site in manufacturer’s original, unopened containers and packaging, with labels clearly identifying product name and manufacturer.

B. Notify manufacturer immediately of any shipping damage.

C. Storage and Handling Requirements:

1. Store and handle materials in accordance with manufacturer’s instructions.
2. Keep materials in manufacturer’s original, unopened containers and packaging until installation.
3. Store materials in clean, dry area indoors.
4. Protect materials and finish during storage, handling, and installation to prevent damage.

PART 2 - PRODUCTS

2.01 MANUFACTURERS

A. AD SYSTEMS 2201 100th St. SW, Everett, WA 98204 | Website: http://specADsystems.com | Phone: 425-740-6011 | ADSystems.Estimating@allegion.com

B. Or approved equal

2.02 INTERIOR SLIDING ALUMINUM-FRAMED DOORS AND PARTITIONS

A. Manufacturer:

1. Scheduled Manufacturer: OfficeSlide™ High Performance Barn (Sliding) Door System by AD Systems.
2. Or approved equal

B. Specified Wall Thickness 6”

C. Frame Profiles: Extruded aluminum frame “wrap” frame with integral vertical jamb (stile pocket).

D. Finish:

1. Standard: Painted Hardcoat (Kynar) Finish. Meets AAMA 2604 Standard Colors: Light Sequin 789G048

E. Frame Profiles: Extruded aluminum frame “wrap” frame with integral vertical jamb (stile pocket).

1. Profile Dimensions:

a. Standard Depth (IM-01) Mullion and Sill]

F. Door Leaves: all Doors to be factory machined for hardware including pilot and function holes.

1. Aluminum Stile & Rail Door: Manufacturer’s standard 1-3/4 inch thick glazed doors with extruded-aluminum tubular stile and rail members. Welded and bolted corner connections.

a. 3-1/2 inch vertical stiles plus 1/2 inch stop.
b. 10” bottom Rail.
c. Glazing: monolithic clear tempered

G. Door Components:

1. Single Top Track: AD Systems extruded aluminum track by AD Systems
2. Valances: Extruded aluminum with integral end caps. Slopped valance.
3. Top Rollers: tandem nylon roller sized to match door weight.
4. Concealed Floor Guide: Integral Jamb floor guide by AD Systems.

5. Soft-Closers: Soft-closing dampener mechanism at both sides of door leaf. Demonstrate closers as tested to 150k cycles.
6. Pull Handles:

    a. AD Systems Standard Ladder Pull: 16” long x 1” diameter. Finish: US32D Satin Stainless Steel.

H. Door Locks:

1. Deadbolt Lock including 16-inch Ladder Pull.
   Finish: US32D Standard, other finishes available

    a. AD5450 Office—Keyed lock deadbolt with cylinder and ADA compliant thumbturn

I. Synchronal Door Drive for bi-parting pairs of doors.

PART 3 - EXECUTION

3.01 EXAMINATION

A. Examine wall openings to receive sliding doors for plumb, level, and square. Note: Finish door operation will be affected by out of tolerance framing.

B. Verify dimensions of wall openings.

C. Examine surfaces to receive top and bottom guide.

D. Notify Architect of conditions that would adversely affect installation or subsequent use of sliding doors.

E. Do not begin installation until unacceptable conditions are corrected.

F. Base of door side to be flush or minimal. Rubber Base acceptable.

3.02 INSTALLATION

A. Install sliding doors in accordance with manufacturer’s instructions at locations indicated on the Drawings.

B. Install sliding doors plumb, level, square, and in proper alignment.

C. Install sliding doors to close against walls without gaps.

D. Install sliding doors to open and close smoothly.

E. Anchor sliding doors securely in place to supports. Required: Fire treated 2 x 6 blocking required full length of track.

3.03 ADJUSTING

A. Adjust sliding doors for proper operation in accordance with manufacturer’s instructions.

B. Adjust sliding doors to operate smoothly without binding.

C. Repair minor damages to finish in accordance with manufacturer's instructions and as approved by Architect.

3.04 CLEANING

A. Clean sliding doors promptly after installation in accordance with manufacturer's instructions.

B. Do not use harsh cleaning materials or methods that could damage materials or finish.

3.05 PROTECTION

A. Protect installed sliding doors from damage during construction.

END OF SECTION 083400 (TES)

SECTION 084313 - ALUMINUM-FRAMED STOREFRONTS

PART 1 - GENERAL

1.1 SUMMARY

A. Section Includes:

1. Aluminum-framed storefront systems.
2. Aluminum Entrance Door.

B. Related Requirements:

1. Division 08 Section 088000: Glazing.
2. Division 08 Sections 080671 & 087100: Door Hardware.
3. Section 084523 – Fiberglass Reinforced Plastic Doors.

1.2 ACTION SUBMITTALS

A. Product Data: For each type of product.

1. Include construction details, material descriptions, dimensions of individual components and profiles, and finishes.

B. Shop Drawings: For aluminum-framed storefronts. Include plans, elevations, sections, full-size details, and attachments to other work.

1. Include details of provisions for assembly expansion and contraction and for draining moisture occurring within the assembly to the exterior.
2. Include full-size isometric details of each type of vertical-to-horizontal intersection of aluminum-framed storefronts, showing the following:
   a. Joinery, including concealed welds.
   b. Anchorage.
   c. Expansion provisions.
   d. Glazing.
   e. Flashing and drainage.
3. Show connection to and continuity with adjacent thermal, weather, air, and vapor barriers.

1.3 QUALITY ASSURANCE

A. Product Options: Information on Drawings and in Specifications establishes requirements for aesthetic effects and performance characteristics of assemblies. Aesthetic effects are indicated by dimensions, arrangements, alignment, and profiles of components and assemblies as they relate to sightlines, to one another, and to adjoining construction.

1. Do not change intended aesthetic effects, as judged solely by Architect, except with Architect's approval. If changes are proposed, submit comprehensive explanatory data to Architect for review.

1.4 WARRANTY

A. Special Finish Warranty, Factory-Applied Finishes: Standard form in which manufacturer agrees to repair finishes or replace aluminum that shows evidence of deterioration of factory-applied finishes within specified warranty period.

1. Deterioration includes, but is not limited to, the following:
   a. Color fading more than 5 Delta E units when tested in accordance with ASTM D2244.
   b. Chalking in excess of a No. 8 rating when tested in accordance with ASTM D4214.
   c. Cracking, checking, peeling, or failure of paint to adhere to bare metal.
2. Warranty Period: 5 years from date of Substantial Completion.

PART 2 - PRODUCTS

2.1 MANUFACTURERS

A. Manufacturers: Subject to compliance with requirements, provide products by the following:

1. EFCO Corporation.
2. Or Approved Equal.

B. Source Limitations: Obtain all components of aluminum-framed storefront system, including framing and accessories, from single manufacturer.

2.2 PERFORMANCE REQUIREMENTS

A. General Performance: Comply with performance requirements specified, as determined by testing of aluminum-framed storefronts representing those indicated for this Project without failure due to defective manufacture, fabrication, installation, or other defects in construction.

1. Aluminum-framed storefronts shall withstand movements of supporting structure, including, but not limited to, twist, column shortening, long-term creep, and deflection from uniformly distributed and concentrated live loads.
2. Failure also includes the following:
   a. Thermal stresses transferring to building structure.
   b. Glass breakage.
   c. Noise or vibration created by wind and thermal and structural movements.
   d. Loosening or weakening of fasteners, attachments, and other components.
   e. Failure of operating units.

2.3 ALUMINUM-FRAMED STOREFRONT SYSTEMS

A. Framing Members: Manufacturer's extruded- or formed-aluminum framing members of thickness required and reinforced as required to support imposed loads.

1. Interior Vestibule Framing Construction: Nonthermal .
2. Glazing System: Retained mechanically with gaskets on four sides .
3. Glazing Plane: Front .
4. Finish: Clear anodic finish .
5. Fabrication Method: Field-fabricated stick system.

6. Aluminum: Alloy and temper recommended by manufacturer for type of use and finish indicated.
7. Steel Reinforcement: As required by manufacturer.

B. Backer Plates: Manufacturer's standard, continuous backer plates for framing members, if not integral, where framing abuts adjacent construction.

C. Brackets and Reinforcements: Manufacturer's standard high-strength aluminum with nonstaining, nonferrous shims for aligning system components.

2.4 GLAZING

A. Glazing: Comply with Section 088000 "Glazing."

2.5 MATERIALS

A. Sheet and Plate: ASTM B209.

B. Extruded Bars, Rods, Profiles, and Tubes: ASTM B221.

C. Structural Profiles: ASTM B308/B308M.

D. Steel Reinforcement:

1. Structural Shapes, Plates, and Bars: ASTM A36/A36M.
2. Cold-Rolled Sheet and Strip: ASTM A1008/A1008M.
3. Hot-Rolled Sheet and Strip: ASTM A1011/A1011M.

E. Steel Reinforcement Primer: Manufacturer's standard zinc-rich, corrosion-resistant primer complying with SSPC-PS Guide No. 12.00; applied immediately after surface preparation and pretreatment. Select surface preparation methods in accordance with recommendations in SSPC-SP COM, and prepare surfaces in accordance with applicable SSPC standard.

2.6 ENTRANCE DOOR SYSTEMS

A. Entrance Doors: Provide EFCO series D500 wide stile entrance door with 6.5” cross rail and 12” bottom rail.

B. Entrance Door Hardware: As specified in Division 8.

2.7 FABRICATION

A. Form or extrude aluminum shapes before finishing.

B. Weld in concealed locations to greatest extent possible to minimize distortion or discoloration of finish. Remove weld spatter and welding oxides from exposed surfaces by descaling or grinding.

C. Fabricate components that, when assembled, have the following characteristics:

1. Profiles that are sharp, straight, and free of defects or deformations.

2. Accurately fitted joints with ends coped or mitered.
3. Physical and thermal isolation of glazing from framing members.
4. Accommodations for thermal and mechanical movements of glazing and framing to maintain required glazing edge clearances.
5. Fasteners, anchors, and connection devices that are concealed from view to greatest extent possible.

D. Mechanically Glazed Framing Members: Fabricate for flush glazing without projecting stops.

E. After fabrication, clearly mark components to identify their locations in Project in accordance with Shop Drawings.

2.8 ALUMINUM FINISHES

A. Clear Anodic Finish: AAMA 611, AA-M12C22A41, Class I, 0.018 mm or thicker.

PART 3 - EXECUTION

3.1 EXAMINATION

A. Examine areas, with Installer present, for compliance with requirements for installation tolerances and other conditions affecting performance of the Work.

B. Proceed with installation only after unsatisfactory conditions have been corrected.

3.2 INSTALLATION, GENERAL

A. Comply with manufacturer's written instructions.

B. Do not install damaged components.

C. Fit joints to produce hairline joints free of burrs and distortion.

D. Rigidly secure nonmovement joints.

E. Install anchors with separators and isolators to prevent metal corrosion and electrolytic deterioration and to prevent impeding movement of moving joints.

F. Seal perimeter and other joints watertight unless otherwise indicated.

G. Metal Protection:

1. Where aluminum is in contact with dissimilar metals, protect against galvanic action by painting contact surfaces with materials recommended by manufacturer for this purpose or by installing nonconductive spacers.
2. Where aluminum is in contact with concrete or masonry, protect against corrosion by painting contact surfaces with bituminous paint.

H. Set continuous sill members and flashing in full sealant bed, as specified in Section 079200 "Joint Sealants," to produce weathertight installation.

I. Install joint filler behind sealant as recommended by sealant manufacturer.

J. Install components plumb and true in alignment with established lines and grades.

3.3 INSTALLATION OF OPERABLE UNITS

A. Install operable units level and plumb, securely anchored, and without distortion. Adjust weather-stripping contact and hardware movement to produce proper operation.

3.4 INSTALLATION OF GLAZING

A. Install glazing as specified in Section 088000 "Glazing."

3.5 ERECTION TOLERANCES

A. Install aluminum-framed storefronts to comply with the following maximum tolerances:

1. Plumb: 1/8 inch in 10 feet; 1/4 inch in 40 feet.
2. Level: 1/8 inch in 20 feet; 1/4 inch in 40 feet.
3. Alignment:
    a. Where surfaces abut in line or are separated by reveal or protruding element up to 1/2 inch wide, limit offset from true alignment to 1/16 inch.
    b. Where surfaces are separated by reveal or protruding element from 1/2 to 1 inch wide, limit offset from true alignment to 1/8 inch.
    c. Where surfaces are separated by reveal or protruding element of 1 inch wide or more, limit offset from true alignment to 1/4 inch.
4. Location: Limit variation from plane to 1/8 inch in 12 feet; 1/2 inch over total length.

END OF SECTION 084313

SECTION 084523 (NHG) - FIBERGLASS-SANDWICH-PANEL ASSEMBLIES

PART 1 - GENERAL

1.1 SUMMARY

A. Section includes the insulated, translucent sandwich panel system and accessories as shown and specified. Work includes providing and installing:

1. Flat insulated, translucent sandwich panels
2. Aluminum clamptite installation system
3. Aluminum sill flashing

B. Related Sections:

1. 033000 – Cast-in-Place Concrete — concrete substrates/support conditions where panels anchor or bear.

2. 042200 – Concrete Unit Masonry — masonry backup/substrates adjacent to panel openings.

3. 051200 – Structural Steel Framing — structural framing/supports for panel system.

4. 055000 – Metal Fabrications — miscellaneous steel/aluminum supports, brackets, and embeds not furnished by the panel manufacturer.

5. 061000 – Rough Carpentry — wood blocking, nailers, and concealed backing where applicable.

6. 061600 – Sheathing — wall sheathing/substrate at adjacent exterior wall assemblies.

7. 072100 – Thermal Insulation — insulation continuity at surrounding wall assemblies.

8. 072726 – Fluid-Applied Membrane Air Barrier — air/water barrier transitions at perimeter of panel system.

9. 076200 – Sheet Metal Flashing and Trim — perimeter flashings, sills, copings, and counterflashings not part of the panel system.

10. 079200 – Joint Sealants — perimeter sealants and sealants between panel system and adjacent construction.

11. 088000 – Glazing — if adjacent glass/glazing requirements need coordination, though this section likely should not specify the translucent sandwich panels themselves.

12. 099100 – Exterior Painting — field painting of adjacent exposed metals or substrates, if required.

1.2 SUBMTTALS

A. Submit manufacturer's product data. Include construction details, material descriptions, profiles, and finishes of components.

B. Submit shop drawings. Include plans, elevations, and details.

C. Submit manufacturer's color charts showing the full range of colors available for factory finished exposed aluminum.

1. When requested, submit samples for each exposed finish required, in same thickness and material indicated for the work and in size indicated below.
   a. Sandwich panels: 7" x 12" units

b. Factory finished aluminum: 3" long sections

D. Submit Installer Certificate, signed by installer, certifying compliance with project qualification requirements.

E. Submit product reports from a qualified independent testing agency indicating each type and class of panel system complies with the project performance requirements, based on comprehensive testing of current products. Previously completed reports will be acceptable for current manufacturer and indicative of products used on this project.

1. Reports required (if applicable) are:
   a. Flame Spread and Smoke Developed (UL 723) – Submit UL Card
   b. Burn Extent (ASTM D 635)
   c. Color Difference (ASTM D 2244)
   d. Impact Strength (UL 972)
   e. Bond Tensile Strength (ASTM C 297 after aging by ASTM D 1037)
   f. Bond Shear Strength (ASTM D 1002)
   g. Beam Bending Strength (ASTM E 72)
   h. Insulation U-Factor (NFRC 100)
   i. NFRC System U-Factor Certification (NFRC 700)
   j. NFRC Visible Light Transmittance (NFRC 202)
   k. Solar Heat Gain Coefficient (NFRC or Calculations)
   l. Condensation Resistance Factor (AAMA 1503) - Thermally Broken, insulated panels required.
   m. Air Leakage (ASTM E 283)
   n. Structural Performance (ASTM E 330)
   o. Water Penetration (ASTM E 331)
   p. Fire Penetration of Exterior Wall Assemblies Using a Direct Flame Impingement Exposure (ASTM E2707)

1.3 CLOSEOUT SUBMITTALS

A. Provide field maintenance manual to include in project maintenance manuals.

1.4 QUALITY ASSURANCE

A. Manufacturer's Qualifications:

1. Material and products shall be manufactured by a company continuously and regularly employed in the manufacture of specified materials for a period of at least ten consecutive years and which can show evidence of those materials being satisfactorily used on at

least six projects of similar size, scope, and location. At least three of the projects have been in successful use for ten years or longer.

2. Panel system must be listed by an ANSI accredited Evaluation Service, which requires quality control inspections and fire, structural, and water infiltration testing of sandwich panel systems by an accredited agency.
3. Quality control inspections shall be conducted at least once each year and shall include manufacturing facilities, sandwich panel components, and production sandwich panels for conformance with AC177 “Translucent Fiberglass Reinforced Plastic (FRP) Faced Panel Wall, Roof and Skylight Systems” as issued by the ICC-ES.

B. Installer’s Qualifications: Installation shall be by an experienced installer, which has been in the business of installing Kalwall panel systems for at least two consecutive years and can show evidence of satisfactory completion of projects of similar size, scope, and type.

1.5 PERFORMANCE REQUIREMENTS

A. The manufacturer shall be responsible for the configuration and fabrication of the complete panel system.

1. When requested, include span analysis data.
2. Standard panel system shall have less than 0.01 cfm/ft² air leakage by ASTM E 283 at 6.24 PSF (50 mph) and no water penetration by ASTM E 331 at 15 PSF; and structural testing by ASTM E 330.
3. Structural Loads. Provide system capable of withstanding positive and negative wind loads indicated on Structural Drawings for components and cladding, but not less than loads required by applicable building code. Design panel system, anchorage, and attachments in accordance with manufacturer’s written recommendations.

B. Deflection Limits:

1. Walls: Limited to L/120 of clear span for each assembly component.

C. Thermal Movements: Allow for thermal movements from ambient- and surface-temperature changes. Base calculations on surface temperatures of materials due to both solar heat gain and nighttime-sky heat loss.

1. Temperature Change (Range): 110 deg F (43 deg C), ambient; 150 deg F (66 deg C), material surfaces.

1.6 DELIVERY, STORAGE AND HANDLING

A. Deliver panel system, components, and materials in manufacturer’s standard protective packaging.

B. Store panels on the long edge; several inches above the ground, blocked and under cover in accordance with manufacturer’s storage and handling instructions.

1.7 WARRANTY

A. Provide manufacturer's and installer's written warranties agreeing to repair or replace panel system work, which fails in material or workmanship, within five years from the commencement date. The commencement date of the warranty shall be the date of substantial completion, but no more than six months from date of delivery. Failure of material or workmanship shall include deterioration of finish on metal in excess of normal weathering; and defects in accessories; insulated, translucent sandwich panels; and other components of the work

B. Extended Panel Warranty:
   1. Face Sheet Color Change: Ten years from the commencement date. The commencement date of the warranty shall be the date of substantial completion, but no more than six months from date of delivery.

C. Extended Manufacturer's factory applied Finish Warranty: Ten years from the commencement date. The commencement date of the warranty shall be the date of substantial completion, but no more than six months from date of delivery.

PART 2 - PRODUCTS

2.1 MANUFACTURER

A. The approved manufacturer and basis of design for this specification is for products manufactured by **KALWALL Corporation. Tel: (800) 258-9777 – Fax: (603) 627-7905 – Email: info@kalwall.com**. Other manufacturers may bid this project subject to compliance with the performance requirements of this specification and submission of evidence thereof. Listing other manufacturers' names in this specification does not constitute approval of their products or relieve them of compliance with all the performance requirements contained herein.
   1. KALWALL Corporation
   2. Structures Unlimited Inc.
   3. Distinctive Skylights Inc.
   4. Or Approved Equal.

2.2 PANEL COMPONENTS

A. Face Sheets:

   1. Translucent faces: Manufactured from glass fiber reinforced thermoset resins, formulated specifically for architectural use.
      a. Thermoplastic (e.g. polycarbonate, acrylic) faces are not acceptable.
      b. Face sheets shall not deform, deflect, or drip when subjected to fire or flame.
   2. Interior face sheets:
      a. Flame spread: Underwriters Laboratories (UL) listed, which requires periodic unannounced retesting, with flame spread rating no greater than 50 and smoke developed no greater than 450 when tested in accordance with UL 723.
      b. Burn extent by ASTM D 635 shall be no greater than 1".
      c. Class CCI
   3. Exterior face sheets:
      a. Color stability: Full thickness of the exterior face sheet shall not change color more than 3 CIE Units DELTA E by ASTM D 2244 after 5 years outdoor South Florida weathering at 5° facing south as measured on a white sample, with and without a protective film or coating to ensure long-term color stability. Color stability shall be unaffected by abrasion or scratching.
      b. Strength: Exterior face sheet shall be uniform in strength, impenetrable by hand- held pencil and repel an impact minimum of 70 ft. lbs**.** without fracture or tear when impacted by a 3-1/4" diameter, 5 lb. free-falling ball per UL 972.
      c. Erosion Protection: Integral, embedded-glass erosion barrier.
   4. Appearance:
      a. Exterior face sheet: Smooth, .070" thick and CRYSTAL in color.

b. Interior face sheet: Smooth, .045” thick and WHITE in color.
c. Face sheets shall not vary more than ± 10% in thickness and be uniform in color.

B. Grid Core:

1. Thermally Broken Composite I-beam grid core shall be of alloy and temper recommended by manufacturer with provisions for mechanical interlocking of muntin-mullion and perimeter. Width of I-beam shall be no less than 7/16”.
2. I-beam Thermal break: Minimum 1”, thermoset fiberglass composite. Poured and de-bridged thermal break is not acceptable.

C. Laminate Adhesive:

1. Heat and pressure resin type adhesive engineered for structural sandwich panel use, with minimum 25-years field use. Adhesive shall pass testing requirements specified by the International Code Council “Acceptance Criteria for Sandwich Panel Adhesives".
2. Minimum tensile strength of 750 PSI when the panel assembly is tested by ASTM C 297 after two exposures to six cycles each of the aging conditions prescribed by ASTM D 1037.
3. Minimum shear strength of the panel adhesive by ASTM D 1002 after exposure to four separate conditions:
   a. 50% Relative Humidity at 68° F: 540 PSI
   b. 182° F: 100 PSI
   c. Accelerated Aging by ASTM D 1037 at room temperature: 800 PSI
   d. Accelerated Aging by ASTM D 1037 at 182° F: 250 PSI

2.3 PANEL CONSTRUCTION

A. Provide sandwich panels of flat fiberglass reinforced translucent face sheets laminated to a grid core of mechanically interlocking I-beams. The adhesive bonding line shall be straight, cover the entire width of the I-beam and have a neat, sharp edge.

1. Thickness: 2-3/4 inches
2. Grid Core Insulation: Fill panel cores with fiberglass batt.
3. Panel U-factor by NFRC certified laboratory:
   a. 2-3/4” thermally broken grid 0.23 “U”.
4. Complete insulated panel system shall have NFRC certified U-factor of 0.23.
5. Visible Light Transmittance (VLT)
   a. Visible LT (NFRC 202) by NFRC certified laboratory: 26%.
6. Solar heat gain coefficient 0.21.
7. Grid pattern as viewed: Nominal size 12” x 12” Tuckerman grid pattern.

B. Standard panels shall deflect no more than 1.9” at 30 PSF in 10’-0” span without a supporting frame by ASTM E 72.

C. Panels shall meet the conditions of acceptance according to ASTM E2707 Fire Penetration of Exterior Wall Assemblies Using a Direct Flame Impingement Exposure:
1. Absence of flame penetration through the wall assembly at any time.
2. Absence of evidence of glowing combustion on the interior surface of the assembly at the end of the 60-min observation period.
3. Absence of evidence of flame, glow, and smoke if the test is terminated prior to the completion of the 60-min observation period.

D. Thermally broken, insulated panels: Minimum Condensation Resistance Factor of 80 by AAMA 1503 measured on the bond line.

2.4 ALUMINUM CLAMPTITE INSTALLATION SYSTEM

A. Aluminum clamptite installation system:

1. Thermally Broken-Flat clamp-tite screw type closure system shall be of extruded aluminum alloy and temper as recommended by manufacturer.

B. Sealing tape: Manufacturer's standard, pre-applied to aluminum clamptite installation system at the factory under controlled conditions.

C. Fasteners: 300 series stainless steel screws for aluminum clamptite installation system, excluding final fasteners to the building.

D. Finish:

1. Manufacturer's factory applied finish, which meets the performance requirements of AAMA 2604. Colors to be selected from manufacturer's custom KCRF color**.** Two color system to be provided.

PART 3 - EXECUTION

3.1 EXAMINATION

A. Installer shall examine substrates, supporting structure, and installation conditions.

B. Do not proceed with panel installation until unsatisfactory conditions have been corrected.

3.2 PREPARATION

A. Metal Protection:

1. Where aluminum will contact dissimilar metals, protect against galvanic action by painting contact surfaces with primer or by applying sealant or tape recommended by sealant manufacturer for this purpose.
2. Where aluminum will contact concrete, masonry, or pressure treated wood, protect against corrosion by painting contact surfaces with bituminous paint or method recommended by sealant manufacturer.

3.3 INSTALLATION

A. Install the panel system in accordance with the manufacturer's fabrication drawings and suggested installation instructions.

1. Anchor component parts securely in place by permanent mechanical attachment system.
2. Accommodate thermal and mechanical movements.
3. Seal aluminum clamptite installation system as shown on the manufacturer’s fabrication drawings and suggested installation instructions.

B. Install joint sealants at perimeter joints and within the panel system in accordance with manufacturers fabrication drawings and suggested installation instructions.

3.4 FIELD QUALITY CONTROL

A. Water Test: Installer to test a representative section of installed materials according to procedures in AAMA 501.2.

B. Repair or replace work that does not pass testing or that is damaged by testing and retest work.

3.5 CLEANING

A. Clean the panel system, interior and exterior, immediately after installation.

B. Refer to manufacturer's written recommendations.

END OF SECTION 084523

SECTION 084523- FIBERGLASS REINFORCED PLASTIC DOORS

PART 1 - GENERAL

1.1 SUMMARY

A. Section Includes:

1. Fiberglass-reinforced plastic doors installed in aluminum frames.
2. Door accessories furnished as part of the FRP door assembly

B. Related Sections:

1. Section 084313 – Aluminum-Framed Storefronts and Entrances: Aluminum door frames.
2. Section 087100 – Door Hardware.
3. Section 088000 – Glazing.

1.2 SUBMITTALS

A. Product Data: Submit manufacturer's product data for each door type, construction, finish, accessory, and option.

B. Shop Drawings: Indicate door sizes, elevations, glazing openings, hardware preparations, reinforcements, edge construction, and installation requirements.

C. Samples: Submit manufacturer's standard color samples for selection by Architect.

D. Closeout Submittals: Submit manufacturer's warranties and maintenance information.

1.3 QUALITY ASSURANCE

A. Manufacturer Qualifications: Manufacturer regularly engaged in manufacturing FRP doors of the type required for this Project.

B. Installer Qualifications: Installer experienced in installation of FRP doors in aluminum framing systems.

1.4 WARRANTY

A. Manufacturer's Warranty: Submit manufacturer's standard warranty for FRP doors.

PART 2 - PRODUCTS

2.1 MANUFACTURERS

1. Basis-of-Design Product: FRP Architectural Doors, Inc., FD55 Heavy Wall FRP Door
2. Acceptable Manufacturers:

a. FRP Architectural Doors, Inc.
b. Curries.
c. Special-Lite.
d. Approved equal.

2.2 FRP DOORS

A. General: Provide 1-3/4-inch-thick FRP doors of sizes and configurations indicated on Drawings.

B. Door Faces:

1. Fiberglass-reinforced polyester.

2. Minimum face thickness: 0.120 inch.

3. Textured finish suitable for institutional use and exterior exposure.

4. Fabricate exposed faces without visible joints or seams.

C. Core: Polyurethane foam core.

D. Stiles and Rails: Manufacturer's reinforced aluminum edge construction.

E. Hardware Reinforcement:

1. Factory reinforce doors for specified hardware.

2. Coordinate hardware locations and preparations with approved Door Hardware Schedule.

3. Provide internal reinforcement suitable for hinges, closers, exit devices, locks, pulls, and other hardware indicated.

F. Glazing Openings:

1. Provide factory-prepared openings where indicated.

2. Provide manufacturer's standard glazing moldings compatible with specified glazing.

3. Coordinate glazing thickness with Section 088000.

G. Louvers: Provide factory-prepared louver openings where indicated.

H. Finish: Manufacturer's standard textured FRP finish. Color as selected by Architect from manufacturer's full range of standard colors.

2.3 FABRICATION

A. Fabricate doors to fit aluminum frames furnished under Section 084313.

B. Fabricate doors square, rigid, and free from warp, twist, bow, and surface defects.

C. Factory machine doors for mortised hardware wherever possible.

D. Provide clearances recommended by door and frame manufacturers and required for proper operation.

E. Coordinate door fabrication with aluminum frames, hardware, glazing, access control, and electrical work before fabrication.

PART 3 - EXECUTION

3.1 FIELD DIMENSIONS & COORDINATION

A. Verify aluminum frame openings and field dimensions before fabrication.

B. Coordinate FRP door dimensions, clearances, hardware preparations, and attachment requirements with aluminum frame manufacturer.

3.2 EXAMINATION

A. Examine aluminum frames and adjacent construction for conditions affecting door installation and operation.

B. Verify that frames are installed plumb, level, square, securely anchored, and within required tolerances.

C. Proceed with installation only after unsatisfactory conditions have been corrected.

3.3 INSTALLATION

A. Install FRP doors in accordance with manufacturer's written instructions and approved Shop Drawings.

B. Install doors plumb, level, square, and properly aligned within aluminum frames.

C. Install doors with uniform clearances and without binding, warping, or interference with hardware operation.

D. Coordinate installation with door hardware, glazing, access control, and electrical work.

3.4 ADJUSTING AND CLEANING

A. Adjust doors and hardware for smooth, quiet, and proper operation.

B. Clean exposed FRP surfaces using methods recommended by manufacturer.

C. Repair or replace doors that are damaged, defective, or do not operate properly.

3.5 PROTECTION

A. Protect installed FRP doors from damage during the remainder of construction.

END OF SECTION 084523

SECTION 085113 (TES) - ALUMINUM WINDOWS

PART 1 - GENERAL

1. Section applies to Tatem Elementary (Contract #20277.25.10).

2. RELATED DOCUMENTS

   A. Drawings and general provisions of the Contract, including General and Supplementary Conditions and Division 01 Specification Sections, apply to this Section.

3. SUMMARY

   A. The Conditions of the Contract, and all Sections of Division 1, are hereby made a part of this Section.

   B. Section Includes: Factory-glazed, thermally broken aluminum double-hung windows, fixed companion windows where indicated, muntin systems, manufacturer-coordinated full-height exterior security screens, insect screens, reinforcing, mullions, receptors, trim, anchors, shims, attachment devices, hardware, and accessories.

   C. Related Sections:

      1. Section 079200 “Joint Sealants.”
      2. Section 084113 ”Aluminum Storefront”
      3. Section 088000 “Glazing.”

   D. Coordinate work with that of all construction contractors affecting or affected by work of this Contract. Cooperate with such contractors to assure the steady progress of the Work.

   E. Conduct field testing of windows when specified in Division 1 by an independent lab using AAMA field test procedures.

   F. Field Measurements: Verify actual measurements/openings by field measurements before fabrication; show recorded measurements on shop drawings. Coordinate field measurements, fabrication schedule with construction progress to avoid construction delays.

4. SYSTEM DESCRIPTION

   A. General: In addition to requirements shown or specified comply with sight lines and profiles indicated on contract documents.

   B. Window Work Requirements: Work Included: Provide labor, materials and equipment necessary to complete the work of the Window work and without limiting the generality thereof include:

      1. Work as required for the proper installation and operation of the new units.
      2. Removal of window packaging, banding and all other surplus materials and equipment.
      3. Provide new factory glazed, thermally broken, aluminum windows; types as specified herein, together with necessary mullions, subframe, panning, trim, and expanders, operating hardware, installation hardware and all other accessories as required.
      4. Treated wood blocking, fillers and nailers as required for secure installation.
      5. Fiberglass insulation between window frames and adjacent construction.
      6. Sealing of all joints within each window assembly.
      7. Sealing of entire exterior perimeter of window units after installation.

   C. Design Requirements:

1. Manufacturer/subcontractor is responsible for adhering to window system design, including installation instructions and necessary modifications to meet specified requirements and maintain visual design concepts.
2. Requirements shown by details are intended to establish basic dimension of unit, sight lines and profiles of members.
3. Provide assemblies free from rattles, wind whistles and noise due to thermal and structural movement and wind pressure.
4. Installation instructions are to take into account specified site peculiarities and expansion and contraction movements so there is no possibility of loosening, weakening or fracturing connection between units and building structure or between units themselves.
5. Provide for expansion and contraction, due to structural movement, without detriment to appearance or performance.
6. Evacuate water without infiltration to interior from exterior face of wall, water entering joints, and condensation occurring within windows, by drain holes and gutters of adequate size or other acceptable method.
7. Provide concealed fastening wherever possible.

D. Performance Requirements: Requirements for aluminum windows, terminology and standards of performance, and fabrication and workmanship are those specified and recommended in AAMA/WDMA/CSA 101/I.S.2/A440-17 and applicable general recommendations published by AAMA. Conform to more stringent of specified AAMA standards and following:

1. Performance Class and Grade: AAMA Grade AW.
2. Air Infiltration Test: Maximum 0.30 cfm per square foot when tested in accordance with ASTM E283 at the pressure prescribed by AAMA/WDMA/CSA 101/I.S.2/A440 for the specified performance class and grade.
3. Water Resistance Test: Subject window unit to a water resistance test in accordance with ASTM E 331 and E547 with no water passing the interior face of the window frame and no leakage as defined in the test method. Mount the glazed unit in its vertical position continuously supported around the perimeter and the sash placed in the fully closed and locked position. When a static pressure of 12 pounds per square foot has been stabilized, apply five gallons of water per square foot of window area to the exterior face of the unit for a period of 15 minutes.
4. Uniform Load: Provide windows meeting the positive and negative design pressures indicated by the structural wind-pressure criteria, but not less than the specified AAMA performance grade. Test in accordance with ASTM E330/E330M and AAMA/WDMA/CSA 101/I.S.2/A440.
5. Life Cycle Test: Per AAMA 101 and AAMA 910, provide proof that the product meets the criteria including passing air and water tests at the conclusion of the cycle tests.
6. “U” Factor: Perform computer simulation in accordance with NFRC 100-2004 on a 1500 mm (60") x 600 mm (24”) maximum size window resulting in a whole window U-Factor of no more than 0.45 using soft coat low-E insulating glass, argon and a warm edge spacer.
7. Solar Heat Gain Coefficient: Perform computer simulation in accordance with NFRC 200-2004 on a 1500 mm (60”) x 600 mm (24”) maximum size window resulting in a whole window SHGC of no more than 0.29 using soft coat low-E insulating glass, argon and a warm edge spacer.
8. Condensation Resistance Factor (CRF): Per AAMA 1503.1, the frame CRF shall not be less than 64 using soft coat low-E insulating glass, argon and a warm edge spacer.
9. Testing: Where manufacturer's standard window units comply with requirements and have been tested in accordance with specified AAMA/WDMA/CSA 101/I.S.2/ A440-17 and NFRC tests, provide certification by AAMA certified independent laboratory showing compliance with such tests. Submit copy of the test report signed by the independent laboratory.

5. SUBMITTALS

A. Product Data: Submit manufacturer's specifications, recommendations and standard details for aluminum window units and integrated Security / Vandal-Resistant Screens.

B. Shop Drawings: Submit shop drawings, including location floor plans or exterior wall elevations showing all window openings, typical unit elevations at 1/4-inch scale, and half size detail sections of every typical composite member. Show anchors, hardware, operators and other components as appropriate if not included in manufacturer's standard data. Include glazing details and standards for factory glazed units and the following:

1. Mullion details, including reinforcement and stiffeners.
2. Joinery details.
3. Weather-stripping details.
4. Thermal-break details.
5. Glazing details.
6. Security/Vandal-Resistant Screen locations and details, including frame and mesh/infill type, fastening details, and opening & locking method.

C. Samples:

1. Submit one sample of each required aluminum finish, on 3 x 3-inch-long sections of extrusion shapes or aluminum sheets as required for window units.
2. Submit additional samples, if and as directed by Architect, to show fabrication techniques, workmanship of component parts, and design of hardware and other exposed auxiliary items.

D. Certifications: Submit certified test laboratory reports by independent laboratory substantiating performance of system. Include other supportive data as required or as necessary.

E. Maintenance Data: For operable window sash, operating hardware and finishes to include in maintenance manuals.

F. Warranty: Special warranty specified in this Section.

6. PRODUCT DELIVERY, STORAGE AND HANDLING

A. Store and handle windows, mullions, glass, hardware and all pertinent items in strict compliance with the manufacturer's instructions.

B. Protect units adequately against damage from the elements, construction activities and other hazards before, during and after installation.

7. WARRANTY

A. Manufacturer's Warrantees: Manufacturer's standard form in which manufacturer agrees to repair or replace aluminum windows that fail in materials or workmanship within specified warranty period.

1. Failures include, but are not limited to, the following:

a. Failure to meet performance requirements.
b. Structural failures including excessive deflection, water leakage, or air infiltration.

c. Faulty operation of movable sash and hardware.
d. Deterioration of metals or other materials beyond that which is normal.
e. Failure of insulating glass.

B. Submit written warrantees from window manufacturer for the following:

1. Windows: Windows furnished are certified as fully warranted against any defects in material or workmanship under normal use and service for a period of ten (10) years from date of fabrication.
2. Finish: The pigmented organic finishes on exposed surfaces of windows and component parts (such as panning, trim, mullions and the like) are certified as complying fully with requirements of AAMA 2605 for pigmented organic coating and fully warranted against chipping, peeling, cracking, fading or blistering for a period of twenty (20) years from date of installation.
3. Insulated Glass: Warranted from visual obstruction due to internal moisture for a period of ten (10) years.

8. QUALITY ASSURANCE

A. Product Requirements: For maximum performance, windows for this project must meet both the testing requirements as contained herein and the minimum material requirements specified. Windows that carry the applicable AAMA rating but do not meet the material thicknesses, depths, etc. shall not be acceptable for use on this project.

B. Installer Qualifications: An installer acceptable to aluminum window manufacturer for installation of units required for this Project.

C. Source Limitations: Obtain aluminum windows & storefronts through one source from a single manufacturer.

D. Product Options: Drawings indicate size, profiles, and dimensional requirements of aluminum windows and are based on the specific system indicated. Do not modify size and dimensional requirements.

E. Fenestration Standard: Comply with AAMA/WDMA/CSA 101/I.S.2/A440-17, "Standard/ Specification for Windows, Doors, and Unit Skylights" for definitions and minimum standards of performance, materials, components, accessories, and fabrication. Comply with more stringent requirements if indicated.

1. Provide AAMA-certified aluminum windows.

F. Glazing Publications: Comply with published recommendations of glass manufacturers and with GANA's "Glazing Manual" unless more stringent requirements are indicated.

G. Preinstallation Conference: If requested, conduct conference at project site to review methods and procedures related to aluminum windows including, but not limited to, the following:

1. Review and finalize construction schedule and verify availability of materials, Installer's personnel, equipment, and facilities needed to make progress and avoid delays.
2. Review, discuss, and coordinate the interrelationship of aluminum windows with other exterior wall components.
3. Review and discuss the sequence of work required to construct a watertight and weathertight exterior building envelope.
4. Inspect and discuss the condition of substrate and other preparatory work performed by other trades.

9. PROJECT CONDITIONS

A. Field Measurements: For new construction installations, verify aluminum window openings by using established dimensions and provide written consent from General Contractor, before factory fabrication and indicate measurements on the Shop Drawings.

1. Established Dimensions: Where field measurements cannot be made without delaying the Work, establish opening dimensions and proceed with fabricating aluminum windows without field measurements. Coordinate wall construction to ensure that actual opening dimensions correspond to established dimensions.

PART 2 - PRODUCTS

1. MANUFACTURERS

A. Subject to compliance with requirements, provide products by one of the following:

1. Basis of Design: Graham Architectural Products, GT2200 Series Double-Hung Windows, with GT1400 Series fixed windows where indicated, and manufacturer's factory-integrated security/vandal-resistant screens at locations indicated.
2. Or pre-approved equal.

B. Thermal Barrier: Provide a continuously extruded, multi-directional 25% glass fiber reinforced 6/6 polyamide nylon (Strut) separating the exterior and interior aluminum window framing members shall be crimped in place with a locking mechanical connection to the Thermal Strut by properly knurling the aluminum cavity and crimping the Strut into place to create a composite thermal barrier assembly. Structural performance values of the Thermal Barrier assembly to meet specific product/project design criteria or at a minimum certified testing criteria and procedures as described by the AAMA TIR-A8 performance standards. Other thermal barrier assemblies such as pour-and-debridged polyurethane systems will not be accepted.

2. MATERIALS

A. Aluminum Extrusions: Extruded aluminum shall be 6063-T6 alloy and temper recommended by window manufacturer for strength, corrosion resistance and application of required finish, but not less than 0.125" thickness at any main frame and sash members.

B. Fasteners: Aluminum, stainless steel, or other materials warranted by manufacturer to be non-corrosive and compatible with aluminum window members, trim, hardware, anchors and other components of window units.

1. Do not use exposed fasteners on exterior except where unavoidable for application of hardware. Match finish of adjoining metal.
2. Provide non-magnetic stainless steel, tamper-proof screws for exposed fasteners, where required, or special tamper-proof fasteners.
3. Locate fasteners so as not to disturb the thermal barrier construction of windows.

C. Anchors, Clips and Window Accessories: Depending on strength and corrosion-inhibiting requirements, fabricate units of aluminum, non-magnetic stainless steel or hot-dip zinc coated steel or iron complying with ASTM A 123.

D. Compression Glazing Strips and Weatherstripping: At manufacturer's option, provide neoprene gaskets complying with ASTM D 2000 Designation 2BC415 to 3BC415, PVC gaskets complying with ASTM D2287, or expanded neoprene gaskets complying with ASTM C 509, Grade 4.

E. Sealant:

1. Unless otherwise indicated for sealants required within fabricated window units, provide elastomeric type as recommended by window manufacturer for joint size and movement, to remain permanently elastic, non-shrinking and non-migrating. Provide product complying with AAMA Specification 803 and 808.
2. Refer to Section 079200 for perimeter sealants between window units and surrounding construction.

F. Insect Screens:

1. Fabric: 18 x 16 aluminum with either “Brite Kote” (lighter) or “Gun Metal” (darker) mesh color selection retained in screen frames with vinyl splines that permit easy replacement.
2. Frames: Extruded aluminum sections with corners mitered and crimped with corner gussets. Provide Manufacturer’s standard finish.
3. Provide manufacturer’s standard insect screens at operable sash where compatible with the security-screen assembly. Coordinate insect screens and full-height security screens so both remain removable and serviceable.

3. WINDOW TYPES (OPERATION)

A. Double Hung Aluminum Windows:

1. Basis of Design: Graham GT2200 Series.
2. Frame Depth: 4 inches nominal.
3. Provide upper and lower operable sash where indicated.
4. Provide block-and-tackle balances, sash locks, lift handles, weatherstripping, and other manufacturer-standard operating hardware.
5. Limit sash openings where indicated or required by the Contract Documents.

B. Security Screens:

1. Provide full-height exterior security screen assemblies coordinated with the window system at locations indicated on the Drawings.
2. Basis of Design: Graham Architectural Products, 8800 Series Aegis Medium-Duty Security Screens.
3. Security screen assemblies shall cover the entire exterior face of the window assembly, including fixed and operable portions, to protect glazing and sash from impact by athletic balls and similar objects.
4. Provide extruded aluminum frames, heavy-duty steel mesh or perforated steel infill, concealed or tamper-resistant fasteners, reinforced members, locking devices, hinges, and mounting hardware as required for a complete assembly.
5. Provide hinged or removable access as required for window operation, cleaning, glazing replacement, and maintenance.
6. Screen finish shall match window frames unless otherwise selected by Architect.
7. Submit elevations and sections showing full window coverage, intermediate supports, attachment to window framing or surrounding construction, locking method, mesh or infill type, and coordination with muntins and sash operation.
8. Security screens shall be supported by the manufacturer’s independent subframe or other manufacturer-engineered support system and shall not be attached solely to removable sash, glazing beads, or muntins. Provide attachments capable of resisting anticipated service and impact loads.

C. Sight lines at all fixed to operable intermediate & perimeter conditions to match details illustrations

on architectural drawings.

D. Sight lines at window openings utilizing subframe / receptor systems are referenced on detail illustrations within architectural drawings.

4. FABRICATION AND ACCESSORIES

A. General: Provide manufacturer's standard fabrication and accessories which comply with specifications. Include complete system for assembly of components and anchorage of window units and provide complete pre-glazing at the factory.

B. Window Material:

1. Windows, true muntins, & meeting rails: Thermally broken aluminum materials.
2. Secondary Members (locking hardware, operating hardware, weatherstripping, gaskets, etc.): Aluminum or a material compatible with aluminum.
3. Main Frame: Nominal thickness of not less than 0.125 inches.
4. Sash Members: Nominal thickness of not less than 0.125 inches.
5. Grids: Provide exterior-applied aluminum muntins and aligned internal muntins within insulating glass to produce the pattern indicated. Muntin profiles, attachment, finish, and alignment shall be manufacturer's standard system approved by Architect.

Hardware:

6. Material: Aluminum, stainless steel or other non-corrosive materials compatible with aluminum for hardware having component parts which are exposed. Cadmium or zinc-plated steel where used must be in accordance with ASTM Specification B 766 or B 633. Hardware to be mounted in concealed extruded grooves to minimize penetrating frame or sash members with fasteners.
7. Sash Locks: Manufacturer's standard white-bronze sweep locks or other locking hardware furnished as part of the tested GT2200 assembly. Provide two locks where required by manufacturer for sash width.

C. Sash Opening Limit Devices: Provide manufacturer's standard tamper-resistant limit devices where indicated or required. Limit clear sash opening to 8" unless otherwise noted or directed. Devices shall not interfere with cleaning, maintenance, or operation of security screens.

D. Thermal Barrier: Provide continuous dual glass fiber reinforced 6/6 polyamide nylon struts around the entire perimeter of the frame and all sash. Thermal barrier shall not be bridged by metal conductors at any point.

E. Construction:

1. Frame Assembly: Mechanical fasteners, welded components, and hardware items shall not bridge thermal barriers. Thermal barriers shall align at all frame and vent corners.

2. Sash Assembly: Fabricate sash with mechanically joined, reinforced, and sealed corners in accordance with the window manufacturer's standard construction for the specified tested assembly. Coordinate sash construction with muntins, glazing, balances, hardware, and security screen.

F. Mullions - Other structural members: When mullion units occur, whether they are joined by integral mullions, independent mullions or by a combination of frame members, the resulting members must be capable of withstanding the load outlined under Uniform Load specified load requirements, without deflecting more than 1/175th of its span. When independent or integral mullions are used to join windows, the mullions shall contain a thermal barrier as specified. Evidence of compliance may be by mathematical calculations.

G. Weather Protection:

1. Provide means of drainage for water and condensation which may accumulate in members of window units by use of two weeps per main frame member.
2. Do not position other material in such a manner as to obstruct the weep holes function

5. GLAZING:

A. Provide factory-glazed window units complying with Section 088000 and the Contract Drawings.

6. SUBFRAME SYSTEM: (Receptors, Mullions, Sills etc.)

A. Subframe: Provide subframes with anchors for window units as illustrated on architectural drawings, of profile and dimensions indicated, but not less than 0.125" thick extruded aluminum. Miter or cope corners, weld and dress, or provide concealed mechanical joint fasteners. Finish to match window units. Provide subframe capable of withstanding design loads window units.

7. ALUMINUM WINDOW FINISHES

A. General:

1. Comply with NAAMM's "Metal Finishes Manual for Architectural and Metal Products" for recommendations for applying and designating finishes. Finish designations prefixed by AA comply with the system established by the Aluminum Association for designating aluminum finishes. Provide manufacturer's standard 2 coat thermocured system, composed specifically formulated inhibitive primer and fluorocarbon color topcoat containing not less than 70% PVDF resin by weight; comply with AAMA 2605.

a. Color: The color selected by Owner/Architect from manufacturer's standard color palette (non- metallic / non-exotic), which the window manufacturer will match. The architect will select the color during the shop drawing review process.

PART 3 - EXECUTION

1. PREPARATION

A. New Construction: Perform operations as necessary to prepare openings for proper installation and operation of new construction units.

B. Verify openings are in accordance with shop drawings and Architect's Drawings.

2. INSTALLATION

A. Comply with manufacturer's specifications and recommendations for installation of window units, hardware, operators and other components of work. In no case shall attachment to structure or to components of the window system be through or affect the thermal barriers of the window units.

B. Set units plumb, level and true to line, without warp or rack of frames or sash. Anchor securely in place. Separate aluminum and other corrodible surfaces from sources of corrosion or electrolytic action.

C. Wedge mineral wool insulation between frames of new windows and construction to remain, or between frames and new receptor as applicable. Compress insulation to no less than 50 percent of original thickness.

D. Set sill members and other members in bed of compound as shown, or with joint fillers or gaskets as shown, to provide weathertight construction. Seal units following installation and as required to provide weathertight system.

3. ADJUST AND CLEAN

A. Adjust operating vent and hardware to provide tight fit at contact points and at weatherstripping, for smooth operation and weathertight closure.

B. Clean aluminum surfaces promptly after installation of windows, exercising care to avoid damage to protective coatings and finishes. Remove excess glazing and sealant compounds, dirt, and other substances. Lubricate hardware and moving parts.

C. Clean glass promptly after installation of windows. Remove glazing and sealant compound, dirt and other substances.

D. Existing windows and other materials removed from site become property of the Contractor who shall promptly remove same and legally dispose of at no additional cost to the Owner.

E. Comply with all applicable laws, rules and regulations.

4. PROTECTION

A. Initiate all protection and other precautions required to ensure that window units will be without damage or deterioration (other than normal weathering) at time of acceptance.

B. Send to Architect, with copy to Owner, written recommendations for maintenance and protection of windows following Substantial Completion of Window Contract.

END OF SECTION 085113 (TES)

SECTION 087100 - DOOR HARDWARE

PART 1 - GENERAL

1.1 RELATED DOCUMENTS

A. Drawings and general provisions of the Contract, including General and Supplementary Conditions and Division 1 Specification Sections, apply to this Section.

1.2 SUMMARY

A. This Section includes commercial door hardware for the following:

1. Swinging doors.

B. Door hardware includes, but is not necessarily limited to, the following:

1. Mechanical door hardware.
2. Electromechanical door hardware.
3. Cylinders specified for doors in other sections.

C. Related Sections:

1. Division 01 Section "General Conditions".
2. Division 06 Section "Rough Carpentry".
3. Division 06 Section "Finish Carpentry".
4. Division 08 Section "Operations and Maintenance".
5. Division 08 Section "Hollow Metal Doors and Frames".
6. Division 08 Section "Flush Wood Doors".
7. Division 08 Section "Aluminum-Framed Entrances and Storefronts".
8. Division 26 Section "Electrical"

D. Codes and References: Comply with the version adopted by the Authority Having Jurisdiction.

1. ANSI A117.1 - Accessible and Usable Buildings and Facilities.
2. ICC/IBC - International Building Code.
3. NFPA 70 - National Electrical Code.
4. NFPA 80 - Fire Doors and Windows.
5. NFPA 101 - Life Safety Code.
6. NFPA 105 - Installation of Smoke Door Assemblies.
7. State Building Codes, Local Amendments.

E. Standards: All hardware specified herein shall comply with the following industry standards as applicable. Any undated reference to a standard shall be interpreted as referring to the latest edition of that standard:

1. ANSI/BHMA Certified Product Standards - A156 Series.
2. UL10C - Positive Pressure Fire Tests of Door Assemblies.
3. ANSI/UL 294 - Access Control System Units.
4. UL 305 - Panic Hardware.

5. ANSI/UL 437- Key Locks.

1.3 SUBMITTALS

A. Product Data: Manufacturer's product data sheets including installation details, material descriptions, dimensions of individual components and profiles, operational descriptions and finishes.

B. Door Hardware Schedule: Prepared by or under the supervision of supplier, detailing, fabrication and assembly of door hardware, as well as procedures and diagrams. Coordinate the final Door Hardware Schedule with doors, frames, and related work to ensure proper size, thickness, hand, function, and finish of door hardware.

1. Format: Comply with scheduling sequence and vertical format in DHI's "Sequence and Format for the Hardware Schedule."
2. Organization: Organize the Door Hardware Schedule into door hardware sets indicating complete designations of every item required for each door or opening. Organize door hardware sets in same order as in the Door Hardware Sets at the end of Part 3. Submittals that do not follow the same format and order as the Door Hardware Sets will be rejected and subject to resubmission.
3. Content: Include the following information:

a. Type, style, function, size, label, hand, and finish of each door hardware item.
b. Manufacturer of each item.
c. Fastenings and other pertinent information.
d. Location of door hardware set, cross-referenced to Drawings, both on floor plans and in door and frame schedule.
e. Explanation of abbreviations, symbols, and codes contained in schedule.
f. Mounting locations for door hardware.
g. Door and frame sizes and materials.
h. Warranty information for each product.

4. Submittal Sequence: Submit the final Door Hardware Schedule at earliest possible date, particularly where approval of the Door Hardware Schedule must precede fabrication of other work that is critical in the Project construction schedule. Include Product Data, Samples, Shop Drawings of other work affected by door hardware, and other information essential to the coordinated review of the Door Hardware Schedule.

C. Shop Drawings: Details of electrified access control hardware indicating the following:

1. Wiring Diagrams: Upon receipt of approved schedules, submit detailed system wiring diagrams for power, signaling, monitoring, communication, and control of the access control system electrified hardware. Differentiate between manufacturer-installed and field-installed wiring. Include the following:

a. Elevation diagram of each unique access controlled opening showing location and interconnection of major system components with respect to their placement in the respective door openings.
b. Complete (risers, point-to-point) access control system block wiring diagrams.
c. Wiring instructions for each electronic component scheduled herein.

2. Electrical Coordination: Coordinate with related sections the voltages and wiring details required at electrically controlled and operated hardware openings.

D. Keying Schedule: After a keying meeting with the owner has taken place prepare a separate keying schedule detailing final instructions. Submit the keying schedule in electronic format. Include keying system explanation, door numbers, key set symbols, hardware set numbers and special instructions. Owner must approve submitted keying schedule prior to the ordering of permanent cylinders/cores.

E. Informational Submittals:

1. Product Test Reports: Indicating compliance with cycle testing requirements, based on evaluation of comprehensive tests performed by manufacturer and witnessed by a qualified independent testing agency.

1.4 CLOSEOUT SUBMITTALS

A. Operating and Maintenance Manuals: Provide manufacturers operating and maintenance manuals for each item comprising the complete door hardware installation in quantity as required in Division 01, Closeout Procedures.

1.5 QUALITY ASSURANCE

A. Manufacturers Qualifications: Engage qualified manufacturers with a minimum 5 years of documented experience in producing hardware and equipment similar to that indicated for this Project and that have a proven record of successful in-service performance.

B. Certified Products: Where specified, products must maintain a current listing in the Builders Hardware Manufacturers Association (BHMA) Certified Products Directory (CPD).

C. Installer Qualifications: A minimum 3 years documented experience installing both standard and electrified door hardware similar in material, design, and extent to that indicated for this Project and whose work has resulted in construction with a record of successful in-service performance.

D. Door Hardware Supplier Qualifications: Experienced commercial door hardware distributors with a minimum 5 years documented experience supplying both mechanical and electromechanical hardware installations comparable in material, design, and extent to that indicated for this Project. Supplier recognized as a factory direct distributor by the manufacturers of the primary materials with a warehousing facility in Project's vicinity. Supplier to have on staff a certified Architectural Hardware Consultant (AHC) available during the course of the Work to consult with Contractor, Architect, and Owner concerning both standard and electromechanical door hardware and keying.

E. Source Limitations: Obtain each type and variety of door hardware specified in this section from a single source unless otherwise indicated.

1. Electrified modifications or enhancements made to a source manufacturer's product line by a secondary or third party source will not be accepted.
2. Provide electromechanical door hardware from the same manufacturer as mechanical door hardware, unless otherwise indicated.

F. Each unit to bear third party permanent label indicating compliance with the referenced testing standards.

G. Keying Conference: Conduct conference to comply with requirements in Division 01 Section "Project Meetings." Keying conference to incorporate the following criteria into the final keying schedule document:

1. Function of building, purpose of each area and degree of security required.
2. Plans for existing and future key system expansion.
3. Requirements for key control storage and software.
4. Installation of permanent keys, cylinder cores and software.
5. Address and requirements for delivery of keys.

H. Pre-Submittal Conference: Conduct coordination conference in compliance with requirements in Division 01 Section "Project Meetings" with attendance by representatives of Supplier(s), Installer(s), and Contractor(s) to review proper methods and the procedures for receiving, handling, and installing door hardware.

1. Prior to installation of door hardware, conduct a project specific training meeting to instruct the installing contractors' personnel on the proper installation and adjustment of their respective products. Product training to be attended by installers of door hardware (including electromechanical hardware) for aluminum, hollow metal and wood doors. Training will include the use of installation manuals, hardware schedules, templates and physical product samples as required.
2. Inspect and discuss electrical roughing-in, power supply connections, and other preparatory work performed by other trades.
3. Review sequence of operation narratives for each unique access controlled opening.
4. Review and finalize construction schedule and verify availability of materials.
5. Review the required inspecting, testing, commissioning, and demonstration procedures

I. At completion of installation, provide written documentation that components were applied according to manufacturer's instructions and recommendations and according to approved schedule.

1.6 DELIVERY, STORAGE AND HANDLING

A. Inventory door hardware on receipt and provide secure lock-up and shelving for door hardware delivered to Project site. Do not store electronic access control hardware, software or accessories at Project site without prior authorization.

B. Tag each item or package separately with identification related to the final Door Hardware Schedule, and include basic installation instructions with each item or package.

C. Deliver, as applicable, permanent keys, cylinders, cores, access control credentials, software and related accessories directly to Owner via registered mail or overnight package service. Instructions for delivery to the Owner shall be established at the "Keying Conference".

1.7 COORDINATION

A. Templates: Obtain and distribute to the parties involved templates for doors, frames, and other work specified to be factory prepared for installing standard and electrified hardware. Check

Shop Drawings of other work to confirm that adequate provisions are made for locating and installing hardware to comply with indicated requirements.

B. Door Hardware and Electrical Connections: Coordinate the layout and installation of scheduled electrified door hardware and related access control equipment with required connections to source power junction boxes, low voltage power supplies, detection and monitoring hardware, and fire and detection alarm systems.

C. Door and Frame Preparation: Doors and corresponding frames are to be prepared, reinforced and pre-wired (if applicable) to receive the installation of the specified electrified, monitoring, signaling and access control system hardware without additional in-field modifications.

1.8 WARRANTY

A. General Warranty: Reference Division 01, General Requirements. Special warranties specified in this Article shall not deprive Owner of other rights Owner may have under other provisions of the Contract Documents and shall be in addition to, and run concurrent with, other warranties made by Contractor under requirements of the Contract Documents.

B. Warranty Period: Written warranty, executed by manufacturer(s), agreeing to repair or replace components of standard and electrified door hardware that fails in materials or workmanship within specified warranty period after final acceptance by the Owner. Failures include, but are not limited to, the following:

1. Structural failures including excessive deflection, cracking, or breakage.
2. Faulty operation of the hardware.
3. Deterioration of metals, metal finishes, and other materials beyond normal weathering.
4. Electrical component defects and failures within the systems operation.

C. Warranty Period: Unless otherwise indicated, warranty shall be one year from date of Substantial Completion.

PART 2 - PRODUCTS

2.1 SCHEDULED DOOR HARDWARE

A. General: Provide door hardware for each door to comply with requirements in Door Hardware Sets and each referenced section that products are to be supplied under.

B. Designations: Requirements for quantity, item, size, finish or color, grade, function, and other distinctive qualities of each type of door hardware are indicated in the Door Hardware Sets at the end of Part 3. Products are identified by using door hardware designations, as follows:

1. Named Manufacturer's Products: Product designation and manufacturer are listed for each door hardware type required for the purpose of establishing requirements. Manufacturers' names are abbreviated in the Door Hardware Schedule.

C. Substitutions: Requests for substitution and product approval for inclusive mechanical and electromechanical door hardware in compliance with the specifications must be submitted in writing and in accordance with the procedures and time frames outlined in Division 01, Substitution Procedures. Approval of requests is at the discretion of the architect, owner, and their designated consultants.

2.2 MATERIALS

A. Hardware shall not have any visible manufacturer names on exposed materials, except cylinders, when the door is in a closed position.

2.3 BUTT HINGES

A. Hinges: ANSI/BHMA A156.1 butt hinges with number of hinge knuckles and other options as specified in the Door Hardware Sets.

1. Quantity: Provide the following hinge quantity:

   a. Two Hinges: For doors with heights up to 60 inches.
   b. Three Hinges: For doors with heights 61 to 90 inches.
   c. Four Hinges: For doors with heights 91 to 120 inches.
   d. For doors with heights more than 120 inches, provide 4 hinges, plus 1 hinge for every 30 inches of door height greater than 120 inches.

2. Hinge Size: Provide the following, unless otherwise indicated, with hinge widths sized for door thickness and clearances required:

   a. Widths up to 3’0”: 4-1/2” standard or heavy weight as specified.
   b. Sizes from 3’1” to 4’0”: 5” standard or heavy weight as specified.

3. Hinge Weight and Base Material: Unless otherwise indicated, provide the following:

   a. Exterior Doors: Heavy weight, non-ferrous, ball bearing or oil impregnated bearing hinges unless Hardware Sets indicate standard weight.
   b. Interior Doors: Standard weight, steel, ball bearing or oil impregnated bearing hinges unless Hardware Sets indicate heavy weight.

4. Hinge Options: Comply with the following:

   a. Non-removable Pins: With the exception of electric through wire hinges, provide set screw in hinge barrel that, when tightened into a groove in hinge pin, prevents removal of pin while door is closed; for all out-swinging lockable doors.

5. Manufacturers:

   a. Ives (IV) - 5BB Series, 5-knuckle.
   b. McKinney (MK) - TA/T4A Series, 5-knuckle.
   c. dormakaba BEST (ST) - F/FBB Series, 5-knuckle.

2.4 CONTINUOUS HINGES

A. Continuous Geared Hinges: ANSI/BHMA A156.26 Grade 1-600 continuous geared hinge. with minimum 0.120-inch thick extruded 6063-T6 aluminum alloy hinge leaves and a minimum overall width of 4 inches. Hinges are non-handed, reversible and fabricated to template screw locations. Factory trim hinges to suit door height and prepare for electrical cut-outs.

1. Where specified, provide modular continuous geared hinges that ship in two or three pieces and form a single continuous hinge upon installation.
2. Manufacturers:.

    a. Ives (IV).
    b. Pemko (PE).
    c. Select Hinges (SL).

2.5 POWER TRANSFER DEVICES

A. Concealed Quick Connect Electric Power Transfers: Provide concealed wiring pathway housing mortised into the door and frame for low voltage electrified door hardware. Furnish with Molex™ standardized plug connectors and sufficient number of concealed wires (up to 12) to accommodate the electrified functions specified in the Door Hardware Sets. Connectors plug directly to through-door wiring harnesses for connection to electric locking devices and power supplies. Wire nut connections are not acceptable.

    1. Manufacturers:

        a. Pemko (PE) - EL-CEPT Series.
        b. Securitron (SU) - EL-CEPT Series.
        c. dormakaba BEST (ST) EPT-12C Series.

B. Electric Door Wire Harnesses: Provide electric/data transfer wiring harnesses with standardized plug connectors to accommodate up to twelve (12) wires. Connectors plug directly to through-door wiring harnesses for connection to electric locking devices and power supplies. Provide sufficient number and type of concealed wires to accommodate electric function of specified hardware. Provide a connector for through-door electronic locking devices and from hinge to junction box above the opening. Wire nut connections are not acceptable. Determine the length required for each electrified hardware component for the door type, size and construction, minimum of two per electrified opening.

    1. Provide one each of the following tools as part of the base bid contract:

        a. McKinney (MK) - Electrical Connecting Kit: QC-R001.
        b. McKinney (MK) - Connector Hand Tool: QC-R003.

    2. Manufacturers:

        a. McKinney (MK) - QC-C Series.
        b. dormakaba BEST (ST) - WH Series.

2.6 DOOR OPERATING TRIM

A. Flush Bolts and Surface Bolts: Provide products conforming to ANSI/BHMA A156.3 and A156.16, Grade 1.

    1. Flush bolts to be furnished with top rod of sufficient length to allow bolt retraction device location approximately six feet from the floor.
    2. Furnish dust proof strikes for bottom bolts.
    3. Surface bolts to be minimum 8” in length and U.L. listed for labeled fire doors and U.L. listed for windstorm components where applicable.

4. Provide related accessories (mounting brackets, strikes, coordinators, etc.) as required for appropriate installation and operation.
5. Manufacturers:

    a. Ives (IV).
    b. Rockwood (RO).
    c. Trimco (TC).

B. Door Push Plates and Pulls: ANSI/BHMA A156.6 door pushes and pull units of type and design specified in the Hardware Sets. Coordinate and provide proper width and height as required where conflicting hardware dictates.

1. Push/Pull Plates: Minimum .050 inch thick, size as indicated in hardware sets, with beveled edges, secured with exposed screws unless otherwise indicated.
2. Door Pull and Push Bar Design: Size, shape, and material as indicated in the hardware sets. Minimum clearance of 2 1/2-inches from face of door unless otherwise indicated.
3. Offset Pull Design: Size, shape, and material as indicated in the hardware sets. Minimum clearance of 2 1/2-inches from face of door and offset of 90 degrees unless otherwise indicated.
4. Pulls shall be provided with a 10” clearance from the finished floor on the push side to accommodate wheelchair accessibility.
5. Fasteners: Provide manufacturer's designated fastener type as indicated in Hardware Sets. When through-bolt fasteners are in the same location as a push plate, countersink the fasteners flush with the door face allowing the push plate to sit flat against the door.
6. Manufacturers:

    a. Ives (IV).
    b. Rockwood (RO).
    c. Trimco (TC).

2.7 CYLINDERS AND KEYING

A. General: Cylinder manufacturer to have minimum (10) years experience designing secured master key systems and have on record a published security keying system policy.

1. Manufacturers:

    a. Medeco (MC).
    b. Match Existing, Field Verify.

B. Cylinder Types: Original manufacturer cylinders able to supply the following cylinder formats and types:

1. Threaded mortise cylinders with rings and cams to suit hardware application.
2. Rim cylinders with back plate, flat-type vertical or horizontal tailpiece, and raised trim ring.
3. Bored or cylindrical lock cylinders with tailpieces as required to suit locks.
4. Tubular deadlocks and other auxiliary locks.
5. Mortise and rim cylinder collars to be solid and recessed to allow the cylinder face to be flush and be free spinning with matching finishes.
6. Keyway: Match Facility Standard.

C. Small Format Interchangeable Cores: Provide small format interchangeable cores (SFIC) as specified, core insert, removable by use of a special key; usable with other manufacturers' cylinders.

D. Patented Cylinders: ANSI/BHMA A156.5, Grade 1 Certified Products Directory (CPD) listed cylinders employing a utility patented and restricted keyway requiring the use of a patented key. Cylinders are to be protected from unauthorized manufacture and distribution by manufacturer's United States patents.

1. Patented key systems shall not be established with products that have an expired patent. Expired systems shall only be specified and supplied to support existing systems.
2. Manufacturers:

a. Medeco (MC) - X4.

E. Keying System: Each type of lock and cylinders to be factory keyed.

1. Supplier shall conduct a "Keying Conference" to define and document keying system instructions and requirements.
2. Furnish factory cut, nickel-silver large bow permanently inscribed with a visual key control number as directed by Owner.
3. Existing System: Field verify and key cylinders to match Owner's existing system.

F. Key Quantity: Provide the following minimum number of keys:

1. Change Keys per Cylinder: Two (2)
2. Master Keys (per Master Key Level/Group): Five (5).
3. Construction Control Keys (where required): Two (2).
4. Permanent Control Keys (where required): Two (2).

G. Construction Keying: Provide temporary keyed construction cores.

H. Key Registration List (Bitting List):

1. Provide keying transcript list to Owner's representative in the proper format for importing into key control software.
2. Provide transcript list in writing or electronic file as directed by the Owner.

2.8 MORTISE LOCKS AND LATCHING DEVICES

A. Mortise Locksets, Grade 1 (Heavy Duty): Provide ANSI/BHMA A156.13, Series 1000, Operational and Security Grade 1 Certified Products Directory (CPD) listed mortise locksets. Listed manufacturers shall meet all functions and features as specified herein.

1. Provide locksets with functions and features as follows:

a. Heavy duty 12-gauge wrought steel case.
b. Stainless steel 3/4" one-piece anti-friction reversible latchbolt with a one-piece hardened stainless steel 1" projection deadbolt.
c. Where required by code, provide knurling or abrasive coating on all levers leading to hazardous areas.

d. Meets UL and CUL Standard 10C Positive Pressure, Fire Test of Door Assemblies with levers that meet A117.1 Accessibility Code.
e. Meets UL Certification Directory ZHLL.R21744 for products used in windstorm rated assemblies.
f. Status indicators inside, outside, or on both sides of doors as specified; available with wording for “locked/unlocked”, “vacant/occupied” or custom wording options. Indicator to be located above the cylinder with the inside thumb-turn not blocking the visibility of the indicator status.
g. Ten-year limited warranty for mechanical functions.

2. Manufacturers:

a. Corbin Russwin Hardware (RU) - ML2000 Series.
b. Sargent Manufacturing (SA) - 8200 Series.

2.9 DEADLOCKS AND LATCHES

A. Mortise Deadlocks, Small Case: ANSI/BHMA A156.36, Grade 1, small case mortise type deadlocks constructed of heavy gauge wrought corrosion resistant steel. Steel or stainless steel bolts with a 1" throw and hardened steel roller pins. Deadlocks to be products of the same source manufacturer and keyway as other specified locksets.

1. Manufacturers:

a. Corbin Russwin Hardware (RU) - DL4000 Series.
b. Sargent Manufacturing (SA) - 4870 Series.

2.10 LOCK AND LATCH STRIKES

A. Strikes: Provide manufacturer's standard strike with strike box for each latch or lock bolt, with curved lip extended to protect frame, finished to match door hardware set, unless otherwise indicated, and as follows:

1. Flat-Lip Strikes: For locks with three-piece antifriction latchbolts, as recommended by manufacturer.
2. Extra-Long-Lip Strikes: For locks used on frames with applied wood casing trim.
3. Aluminum-Frame Strike Box: Provide manufacturer's special strike box fabricated for aluminum framing.
4. Double-lipped strikes: For locks at double acting doors. Furnish with retractable stop for rescue hardware applications.

B. Standards: Comply with the following:

1. Strikes for Mortise Locks and Latches: BHMA A156.13.
2. Strikes for Bored Locks and Latches: BHMA A156.2.
3. Strikes for Auxiliary Deadlocks: BHMA A156.36.
4. Dustproof Strikes: BHMA A156.16.

2.11 CONVENTIONAL EXIT DEVICES

A. General Requirements: All exit devices specified herein shall meet or exceed the following criteria:

1. Exit devices shall have a five-year warranty.
2. At doors not requiring a fire rating, provide devices complying with NFPA 101 and listed and labeled for "Panic Hardware" according to UL305. Provide proper fasteners as required by manufacturer including sex nuts and bolts at openings specified in the Hardware Sets.
3. Where exit devices are required on fire rated doors, provide devices complying with NFPA 80 and with UL labeling indicating "Fire Exit Hardware". Provide devices with the proper fasteners for installation as tested and listed by UL. Consult manufacturer's catalog and template book for specific requirements.
4. Except on fire rated doors, provide exit devices with hex key dogging device to hold the pushbar and latch in a retracted position. Provide optional keyed cylinder dogging on devices where specified in Hardware Sets.
5. Devices must fit flat against the door face with no gap that permits unauthorized dogging of the push bar. The addition of filler strips is required in any case where the door light extends behind the device as in a full glass configuration.
6. Lever Operating Trim: Where exit devices require lever trim, furnish manufacturer's heavy duty escutcheon trim with threaded studs for thru-bolts.

    a. Lock Trim Design: As indicated in Hardware Sets, provide finishes and designs to match that of the specified locksets.
    b. Where function of exit device requires a cylinder, provide a cylinder (Rim or Mortise) as specified in Hardware Sets.

7. Vertical Rod Exit Devices: Where surface or concealed vertical rod exit devices are used at interior openings, provide as less bottom rod (LBR) unless otherwise indicated. Provide dust proof strikes where thermal pins are required to project into the floor.
8. Narrow Stile Applications: At doors constructed with narrow stiles, or as specified in Hardware Sets, provide devices designed for maximum 2" wide stiles.
9. Dummy Push Bar: Nonfunctioning push bar matching functional push bar.
10. Rail Sizing: Provide exit device rails factory sized for proper door width application.
11. Through Bolt Installation: For exit devices and trim as indicated in Door Hardware Sets.

B. Conventional Push Rail Exit Devices (Heavy Duty): ANSI/BHMA A156.3, Grade 1 Certified Products Directory (CPD) listed exit devices. Listed manufacturers shall meet all functions and features as specified herein.

1. Provide exit devices with functions and features as follows:

    a. Where required by code, provide knurling or abrasive coating on all levers leading to hazardous areas.
    b. Meets UL and CUL Standard 10C Positive Pressure, Fire Test of Door Assemblies with levers that meet A117.1 Accessibility Code.
    c. No catch points: addition of applied deflectors or other added components are not allowed.
    d. No visible plastic.
    e. Heavy duty end caps with flush and overlapping options made of stainless steel, brass, or bronze with architectural finishes.
    f. Constructed of all stainless steel.

g. Stainless steel pullman type latch with deadlock feature.
h. Narrow or wide style exterior trim as specified in the hardware sets.
i. Center case adjustability on concealed vertical rod exit devices; single operation with hex key individually adjusts top or bottom latches. No retainer screws or clips required to maintain adjustment.
j. Ten-year limited warranty for mechanical features.

2. Electromechanical exit devices shall have the following functions and features:

a. Universal Molex plug-in connectors that have standardized color-coded wiring and are field configurable in fail safe or fail secure and operate from 12vdc to 24vdc regulated.
b. Wire routing for all non-access control electromechanical functions and EcoFlex trim to be contained within the carrier of the device eliminating the need for cavities in doors to be drilled. Include a protective film so that wires don't get damaged if the rail needs to be removed.
c. EcoFlex or equivalent technology that reduces energy consumption up to 92% as certified by GreenCircle.
d. Options to be available for request-to-exit or enter signaling, latchbolt and touchbar monitoring.
e. Field configurable electrified trim to fail-safe or fail-secure that operates from 12-24VDC.

3. Manufacturers:

a. Corbin Russwin Hardware (RU) - PED4000 / PED5000 Series.
b. Sargent Manufacturing (SA) - PE80 Series.

2.12 SURFACE DOOR CLOSERS

A. All door closers specified herein shall meet or exceed the following criteria:

1. General: Door closers to be from one manufacturer, matching in design and style, with the same type door preparations and templates regardless of application or spring size. Closers to be non-handed with full sized covers.
2. Standards: Closers to comply with UL-10C for Positive Pressure Fire Test and be U.L. listed for use of fire rated doors.
3. Size of Units: Comply with manufacturer's written recommendations for sizing of door closers depending on size of door, exposure to weather, and anticipated frequency of use. Where closers are indicated for doors required to be accessible to the Americans with Disabilities Act, provide units complying with ANSI ICC/A117.1.
4. Closer Arms: Provide heavy duty, forged steel closer arms unless otherwise indicated in Hardware Sets.
5. Closers shall not be installed on exterior or corridor side of doors; where possible install closers on door for optimum aesthetics.
6. Closer Accessories: Provide door closer accessories including custom templates, special mounting brackets, spacers and drop plates as required for proper installation. Provide through-bolt and security type fasteners as specified in the hardware sets.

B. Door Closers, Surface Mounted (Heavy Duty): ANSI/BHMA A156.4, Grade 1 Certified Products Directory (CPD) listed surface mounted, heavy duty door closers with complete spring power adjustment, sizes 1 thru 6; and fully operational adjustable according to door size, frequency of

use, and opening force. Closers to be rack and pinion type, one piece cast iron or aluminum alloy body construction, with adjustable backcheck and separate non-critical valves for closing sweep and latch speed control. Provide non-handed units standard.

1. Heavy duty surface mounted door closers shall have a 30-year warranty.

2. Manufacturers:

   a. Corbin Russwin Hardware (RU) - DC6000 Series.
   b. Norton Rixson (NO) - 7500 Series.
   c. Sargent Manufacturing (SA) - 351 Series.

2.13 ARCHITECTURAL TRIM AND ACCESSORIES

A. Door, Frame and Wall Protective Trim: ANSI/BHMA A156.6, protective products as specified in the hardware sets. Door protection plates shall be not more than 2" less than door width on stop side and 1” less door width on the pull side or on stop side of pairs of doors. Listed manufacturers shall meet all functions and features as specified herein.

1. Provide protective trim with functions and features as follows:

   a. Meets ADA requirements for smooth bottom door surfaces.
   b. UL Classified options for use on fire-rated doors up to 3 hours.
   c. Fabricated from stainless steel, brass, bronze, aluminum, or high-impact plastic.
   d. Available in a variety of sizes, finishes, and profiles to suit aesthetic and functional requirements.
   e. Designed to protect doors, frames, and adjacent walls from damage due to impact, abrasion, or traffic.
   f. Fasteners included; adhesive-backed options available for select models.
   g. Ten-year limited warranty.

2. Manufacturers:

   a. Ives (IV).
   b. Rockwood (RO).
   c. Trimco (TC).

2.14 DOOR STOPS AND HOLDERS

A. Door Stops and Bumpers: ANSI/BHMA A156.16, Grade 1 door stops and wall bumpers. Provide wall bumpers, either convex or concave types with anchorage as indicated, unless floor or other types of door stops are specified in Hardware Sets. Do not mount floor stops where they will impede traffic. Where floor or wall bumpers are not appropriate, provide overhead type stops and holders.

1. Manufacturers:

   a. Ives (IV).
   b. Rockwood (RO).
   c. Trimco (TC).

B. Overhead Door Stops and Holders: ANSI/BHMA A156.8, Grade 1 Certified Products Directory (CPD) listed overhead stops and holders to be surface or concealed types as indicated in Hardware Sets. Track, slide, arm and jamb bracket to be constructed of extruded bronze and shock absorber spring of heavy tempered steel. Provide non-handed design with mounting brackets as required for proper operation and function.

1. Manufacturers:

a. dormakaba (DO).
b. Norton Rixson (NO).
c. Sargent Manufacturing (SA).

2.15 ARCHITECTURAL SEALS

A. General: Thresholds, weatherstripping, and gasket seals to be of type and design as specified below or in the Hardware Sets. Provide continuous weatherstrip gasketing on exterior doors and provide smoke, light, or sound gasketing on interior doors where indicated. At exterior applications provide non-corrosive fasteners and elsewhere where indicated.

B. Smoke Labeled Gasketing: Assemblies complying with NFPA 105 that are listed and labeled by a testing and inspecting agency acceptable to authorities having jurisdiction, for smoke control ratings indicated, based on testing according to UL 1784.

1. Provide smoke labeled perimeter gasketing at all smoke labeled openings.

C. Fire Labeled Gasketing: Assemblies complying with NFPA 80 that are listed and labeled by a testing and inspecting agency acceptable to authorities having jurisdiction, for fire ratings indicated, based on testing according to UL-10C.

1. Provide intumescent seals as indicated to meet UL10C Standard for Positive Pressure Fire Tests of Door Assemblies, and NFPA 252, Standard Methods of Fire Tests of Door Assemblies.

D. Sound-Rated Gasketing: Assemblies that are listed and labeled by a testing and inspecting agency, for sound ratings indicated.

E. Replaceable Seal Strips: Provide only those units where resilient or flexible seal strips are easily replaceable and readily available from stocks maintained by manufacturer.

F. Manufacturers:

1. National Guard Products (NG).
2. Pemko (PE).
3. Reese Enterprises, Inc. (RE).

2.16 ELECTRONIC ACCESSORIES

A. Door Position Switches: Door position magnetic reed contact switches specifically designed for use in commercial door applications. On recessed models the contact and magnetic housing snap-lock into a 1" diameter hole. Surface mounted models include wide gap distance design

complete with armored flex cabling. Provide SPDT, N/O switches with optional Rare Earth Magnet installation on steel doors with flush top channels.

1. Manufacturers:

   a. Alarm Controls (AK) - CP1-1026 Series.
   b. Sargent Manufacturing (SA) - 3280 Series.
   c. Securitron (SU) - DPS Series.

B. Intelligent Switching Power Supplies: Provide the least number of power supplies at the appropriate amperage level sufficient to exceed the required total draw for the specified electrified hardware and access control equipment.

1. Power supplies shall meet all functions and features as specified herein.

   a. UL listed dual voltage 12 or 24 VDC field selectable continuous output.
   b. Dedicated fast charger to prolong battery life with low battery cutoff to protect batteries from deep discharge.
   c. Enhanced surge immunity for input/output protection
   d. Separate, dedicated battery charging circuit to keep locks cooler.
   e. Dual-color LED visual notification to prevent applying incorrect voltages to the power supply.
   f. Instant auto-switch to battery on AC loss.
   g. Expandable up to 16 outputs in the standard enclosure
   h. Integrated fire alarm interface to allow main output shutdown or disconnect on a per output basis when using an R8 output module.
   i. Network ready and remotely manage locks and connected devices when using an M8 managed output module on network models.
   j. Lifetime replacement, no-fault, no questions asked warranty.

2. Manufacturers:

   a. Life Safety Power (LP).
   b. Securitron (SU) - AQL Series.

2.17 FABRICATION

A. Fasteners: Provide door hardware manufactured to comply with published templates generally prepared for machine, wood, and sheet metal screws. Provide screws according to manufacturers recognized installation standards for application intended.

2.18 FINISHES

A. Standard: Designations used in the Hardware Sets and elsewhere indicate hardware finishes complying with ANSI/BHMA A156.18, including coordination with traditional U.S. finishes indicated by certain manufacturers for their products.

B. Provide quality of finish, including thickness of plating or coating (if any), composition, hardness, and other qualities complying with manufacturer's standards, but in no case less than specified by referenced standards for the applicable units of hardware

C. Protect mechanical finishes on exposed surfaces from damage by applying a strippable, temporary protective covering before shipping.

PART 3 - EXECUTION

3.1 EXAMINATION

A. Examine scheduled openings, with Installer present, for compliance with requirements for installation tolerances, labeled fire door assembly construction, wall and floor construction, and other conditions affecting performance.

B. Notify architect of any discrepancies or conflicts between the door schedule, door types, drawings and scheduled hardware. Proceed only after such discrepancies or conflicts have been resolved in writing.

3.2 PREPARATION

A. Hollow Metal Doors and Frames: Comply with ANSI/DHI A115 series.

B. Wood Doors: Comply with ANSI/DHI A115-W series.

3.3 INSTALLATION

A. Install each item of mechanical and electromechanical hardware and access control equipment to comply with manufacturer's written instructions and according to specifications.

1. Installers are to be trained and certified by the manufacturer on the proper installation and adjustment of fire, life safety, and security products including: hanging devices; locking devices; closing devices; and seals.

B. Paint prime coated mullions to match frames.

C. Mounting Heights: Mount door hardware units at heights indicated in following applicable publications, unless specifically indicated or required to comply with governing regulations:

1. Standard Steel Doors and Frames: DHI's "Recommended Locations for Architectural Hardware for Standard Steel Doors and Frames."
2. DHI TDH-007-20: Installation Guide for Doors and Hardware.
3. Where indicated to comply with accessibility requirements, comply with ANSI A117.1 "Accessibility Guidelines for Buildings and Facilities."
4. Provide blocking in drywall partitions where wall stops or other wall mounted hardware is located.

D. Retrofitting: Install door hardware to comply with manufacturer's published templates and written instructions. Where cutting and fitting are required to install door hardware onto or into surfaces that are later to be painted or finished in another way, coordinate removal, storage, and reinstallation of surface protective trim units with finishing work specified in Division 9 Sections. Do not install surface-mounted items until finishes have been completed on substrates involved.

E. Push Plates and Door Pulls: When through-bolt fasteners are in the same location as a push plate, countersink the fasteners flush with the door face allowing the push plate to sit flat against the door.

F. Thresholds: Set thresholds for exterior and acoustical doors in full bed of sealant complying with requirements specified in Division 7 Section "Joint Sealants."

G. Storage: Provide a secure lock up for hardware delivered to the project but not yet installed. Control the handling and installation of hardware items so that the completion of the work will not be delayed by hardware losses before and after installation.

3.4 FIELD QUALITY CONTROL

A. Field Inspection (Punch Report): Reference Division 01 Sections “Closeout Procedures”. Produce project punch report for each installed door opening indicating compliance with approved submittals and verification hardware is properly installed, operating and adjusted. Include list of items to be completed and corrected, indicating the reasons or deficiencies causing the Work to be incomplete or rejected.

1. Organization of List: Include separate Door Opening and Deficiencies and Corrective Action Lists organized by Mark, Opening Remarks and Comments, and related Opening Images and Video Recordings.

3.5 ADJUSTING

A. Initial Adjustment: Adjust and check each operating item of door hardware and each door to ensure proper operation or function of every unit. Replace units that cannot be adjusted to operate as intended. Adjust door control devices to compensate for final operation of heating and ventilating equipment and to comply with referenced accessibility requirements.

3.6 CLEANING AND PROTECTION

A. Protect all hardware stored on construction site in a covered and dry place. Protect exposed hardware installed on doors during the construction phase. Install any and all hardware at the latest possible time frame.

B. Clean adjacent surfaces soiled by door hardware installation.

C. Clean operating items as necessary to restore proper finish. Provide final protection and maintain conditions that ensure door hardware is without damage or deterioration at time of owner occupancy.

3.7 DEMONSTRATION

A. Instruct Owner's maintenance personnel to adjust, operate, and maintain mechanical and electromechanical door hardware.

3.8 DOOR HARDWARE SETS

A. The hardware sets represent the design intent and direction of the owner and architect. They are a guideline only and should not be considered a detailed hardware schedule. Discrepancies, conflicting hardware and missing items should be brought to the attention of the architect with corrections made prior to the bidding process. Omitted items not included in a hardware set should be scheduled with the appropriate additional hardware required for proper application and functionality.

1. Quantities listed are for each pair of doors, or for each single door.
2. The supplier is responsible for handing and sizing all products.
3. Where multiple options for a piece of hardware are given in a single line item, the supplier shall provide the appropriate application for the opening.
4. At existing openings with new hardware the supplier shall field inspect existing conditions prior to the submittal stage to verify the specified hardware will work as required. Provide alternate solutions and proposals as needed.

B. Refer to Section 080671, Door Hardware Sets, for hardware sets.

END OF SECTION 087100

SECTION 088000 – GLAZING

PART 1 - GENERAL

1.1 SUMMARY

A. This Section includes glazing for the following products and applications, including those specified in other Sections where glazing requirements are specified by reference to this Section:

1. Doors.
2. Window units.
3. Storefront system.
4. Window Security Film.

1.2 REFERENCES

A. Division 08 Section for Aluminum-Framed Storefronts and FRP Doors.

B. Division 08 Section for Hollow Metal Frames.

C. Division 08 Section for Aluminum Windows.

D. Division 08 Section for Flush Wood Doors.

1.3 DEFINITIONS

A. Manufacturer: A firm that produces primary glass or fabricated glass as defined in referenced glazing publications.

1.4 PERFORMANCE REQUIREMENTS

A. General: Provide glazing systems capable of withstanding normal thermal movement and wind and impact loads (where applicable) without failure, including loss or glass breakage attributable to the following: defective manufacture, fabrication, and installation; failure of sealants or gaskets to remain watertight and airtight; deterioration of glazing materials; or other defects in construction.

B. Glass Design: Glass thicknesses indicated are minimums and are for detailing only. Confirm glass thicknesses by analyzing Project loads and in-service conditions. Provide glass lites for various size openings in nominal thicknesses indicated, but not less than thicknesses and in strengths (annealed or heat treated) required to meet or exceed the following criteria:

1. Glass Thicknesses: Select minimum glass thicknesses to comply with ASTM E 1300, according to the following requirements:
   a. Specified Design Wind Loads: As indicated.

   b. Specified Design Wind Loads: Determine design wind loads applicable to Project from basic wind speed indicated in miles per hour (meters per second) at 33 feet (10 m) above grade, according to ASCE 7, "Minimum Design Loads

for Buildings and Other Structures": Section 6.4.2, "Analytic Procedure," based on mean roof heights above grade indicated on Drawings.

c. Probability of Breakage for Vertical Glazing: 8 lites per 1000 for lites set vertically or not more than 15 degrees off vertical and under wind action.
   1) Load Duration: 60 seconds or less.

d. Maximum Lateral Deflection: For the following types of glass supported on all four edges, provide thickness required that limits center deflection at design wind pressure to 1/50 times the short side length or 1 inch (25 mm), whichever is less.

e. Minimum Glass Thickness for Exterior Lites: Not less than 6 mm.

f. Thickness of Tinted and Heat-Absorbing Glass: Provide the same thickness for each tint color indicated throughout Project.

C. Thermal Movements: Provide glazing that allows for thermal movements resulting from the following maximum change (range) in ambient and surface temperatures acting on glass framing members and glazing components. Base engineering calculation on surface temperatures of materials due to both solar heat gain and nighttime-sky heat loss.

1. Temperature Change (Range): 120 deg F (67 deg C), ambient; 180 deg F (100 deg C), material surfaces.

D. Thermal and Optical Performance Properties: Provide glass with performance properties specified based on manufacturer's published test data, as determined according to procedures indicated below:

1. For monolithic-glass lites, properties are based on units with lites 6 mm thick.
2. Center-of-Glass U-Values: NFRC 100 methodology using LBL-35298 WINDOW 4.1 computer program, expressed as Btu/ sq. ft. x h x deg F (W/sq. m x K).
3. Center-of-Glass Solar Heat Gain Coefficient: NFRC 200 methodology using LBL-35298 WINDOW 4.1 computer program.
4. Solar Optical Properties: NFRC 300.

1.5 SUBMITTALS

A. Product Data: For each glass product and glazing material indicated.

B. Samples: For the following products, in the form of 12-inch- (300-mm-) square Samples for glass.

1. Each color of tinted float glass.
2. Fire-Rated glass.
3. Bullet Resistant Glass.
4. Security Film.
5. Spandrel Panel.

C. Glazing Schedule: Use same designations indicated on Drawings for glazed openings in preparing a schedule listing glass types and thicknesses for each size opening and location.

D. Product Certificates: Signed by manufacturers of glass and glazing products certifying that products furnished comply with requirements.

E. Qualification Data: For firms and persons specified in "Quality Assurance" Article to demonstrate their capabilities and experience. Include lists of completed projects with project names and addresses, names and addresses of Design Consultant and Authority, and other information specified.

F. Product Test Reports: From a qualified testing agency indicating the following products comply with requirements, based on comprehensive testing of current products:

1. Tinted float glass.
2. Coated float glass.
3. Glazing gaskets.

G. Warranties: Special warranties specified in this Section.

1.5 QUALITY ASSURANCE

A. Installer Qualifications: An experienced installer who has completed glazing similar in material, design, and extent to that indicated for this Project; whose work has resulted in glass installations with a record of successful in-service performance; and who employs glass installers for this Project who are certified under the National Glass Association Glazier Certification Program as Level 2 (Senior Glaziers) or Level 3 (Master Glaziers).

B. Installer Qualifications: An experienced installer who has completed glazing similar in material, design, and extent to that indicated for Project and whose work has resulted in construction with a record of successful in-service performance.

C. Source Limitations for Clear Glass: Obtain clear float glass from one primary-glass manufacturer.

D. Source Limitations for Coated Glass: Obtain coated glass from one manufacturer for each type of coating and each type and class of float glass indicated.

E. Source Limitations for Glazing Accessories: Obtain glazing accessories from one source for each product and installation method indicated.

F. Glass Product Testing: Obtain glass test results for product test reports in "Submittals" Article from a qualified testing agency based on testing glass products.

1. Glass Testing Agency Qualifications: An independent testing agency with the experience and capability to conduct the testing indicated, as documented according to ASTM E 548.
2. Glass Testing Agency Qualifications: An independent testing agency accredited according to the NFRC CAP 1 Certification Agency Program.

G. Fire-Rated Door Assemblies: Assemblies complying with NFPA 80 that are listed and labeled by a testing and inspecting agency acceptable to authorities having jurisdiction, for fire ratings indicated, based on testing according to NFPA 252.

H. Safety Glass: Category II materials complying with testing requirements in 16 CFR 1201 and ANSI Z97.1.

1. Subject to compliance with requirements, permanently mark safety glass with certification label of Safety Glazing Certification Council or another certification agency acceptable to authorities having jurisdiction.

I. Glazing Publications: Comply with published recommendations of glass product manufacturers and organizations below, unless more stringent requirements are indicated. Refer to these publications for glazing terms not otherwise defined in this section or in referenced standards.

1. GANA Publications: GANA'S "Glazing Manual" and "Laminated Glass Design Guide."

J. Window Safety Film Installer Qualifications: All products listed in this section are to be installed by a single installer with a minimum of five years demonstrated experience in installing products of the same type and scope as specified.

1. Provide documentation that the installer is authorized by the Manufacturer to perform Work specified in this section.
2. Provide a commercial building reference list of 5 properties where the installer has applied window film. This list will include the following information:
   a. Name of building.
   b. The name and telephone number of a management contact.
   c. Type of glass.
   d. Type of film and/or film attachment system.
   e. Amount of film and/or film attachment system installed.
   f. Date of completion.

1.6 DELIVERY, STORAGE, AND HANDLING

A. Protect glazing materials according to manufacturer's written instructions and as needed to prevent damage to glass and glazing materials from condensation, temperature changes, direct exposure to sun, or other causes.

1.7 PROJECT CONDITIONS

A. Environmental Limitations: Do not proceed with glazing when ambient and substrate temperature conditions are outside limits permitted by glazing material manufacturers and when glazing channel substrates are wet from rain, frost, condensation, or other causes.

1.8 WARRANTY

A. General Warranty: Special warranties specified in this Article shall not deprive Authority of other rights Authority may have under other provisions of the Contract Documents and shall be in addition to, and run concurrent with, other warranties made by Contractor under requirements of the Contract Documents.

B. Manufacturer's Special Warranty on Coated-Glass Products: Written warranty, made out to Authority and signed by coated-glass manufacturer agreeing to furnish replacements for those coated-glass units that deteriorate as defined in "Definitions" Article, f.o.b. the nearest shipping point to Project site, within specified warranty period indicated below.

1. Warranty Period: 10 years from date of Substantial Completion.

C. At project closeout, provide to Owner or Owners Representative an executed current copy of the Window Safety Film manufacturer's standard 12 year limited warranty against manufacturing defect, outlining its terms, conditions, and exclusions from coverage. Refer to attached Safety & Security Window Film Warranty.

PART 2 - PRODUCTS

2.1 PRODUCTS AND MANUFACTURERS

A. Acceptable Manufacturers, subject to compliance with all requirements:

1. Pilkington NA
2. PPG Industries, Inc.
3. Or approved equal

B. Security Window Film:
   a. 3M Scotchshield Ultra S800 Safety and Security Window Film;
   b. Or approved equal.

2.2 INSULATED GLASS

A. Insulating-Glass Units, General: Factory-assembled units consisting of sealed lites of glass separated by a dehydrated interspace and complying with ASTM E 774 for Class CBA units and with requirements specified in this section.

1. Provide Kind HS (heat-strengthened) float glass in place of annealed glass where needed to resist thermal stresses induced by differential shading of individual glass lites and to comply with glass design requirements specified in Part 1 "Performance Requirements" Article.
2. Overall Unit Thickness and Thickness of Each Lite: Dimensions indicated for insulating-glass units are nominal and the overall thicknesses of units are measured perpendicularly from outer surfaces of glass lites at unit's edge.
3. Sealing System: Dual seal.
4. Spacer Specifications: Manufacturer's standard spacer material and construction.
5. Spacer Specifications: Manufacturer's standard spacer material and construction complying with the following requirements:
   a. Spacer Material: Aluminum with mill or clear anodic finish.
   b. Corner Construction: Manufacturer's standard corner construction.

2.3 PRIMARY FLOAT GLASS

A. Float glass: ASTM C 1036, Type I (transparent glass, flat), Class as indicated below, and Quality q3 (glazing select).

1. Used as part of an insulated unit, unless otherwise indicated. Refer to glazing types at the end of this section.
2. Class 1 (clear) unless otherwise indicated.

2.4 HEAT-TREATED FLOAT GLASS

A. Fabrication Process: By vertical (tong-held) or horizontal (roller-hearth) process, at manufacturer's option. Except provide horizontal process where indicated as tongless or free of tong marks.

B. Uncoated, Clear, Heat-Treated Float Glass: ASTM C 1048, Condition A (uncoated surfaces), Type I (transparent glass, flat), Class 1 (clear), Quality q3 (glazing select), kind as indicated below.
   1. Kind: FT (fully tempered)

2.5 GLAZING GASKETS

A. Dense Compression Gaskets: Molded or extruded gaskets of material indicated below, complying with standards referenced with name of elastomer indicated below, and of profile and hardness required to maintain watertight seal:

   1. Neoprene, ASTM C 864.
   2. EPDM, ASTM C 864.
   3. Silicone, ASTM C 1115.
   4. Thermoplastic polyolefin rubber, ASTM C 1115.
   5. Any material indicated above.

B. Soft Compression Gaskets: Extruded or molded, closed-cell, integral-skinned gaskets of material indicated below; complying with ASTM C 509, Type II, black; and of profile and hardness required to maintain watertight seal:

   1. Neoprene.
   2. EPDM.
   3. Silicone.
   4. Thermoplastic polyolefin rubber.
   5. Any material indicated above.

2.6 MISCELLANEOUS GLAZING MATERIALS

A. General: Provide products of material, size, and shape complying with referenced glazing standard, requirements of manufacturers of glass and other glazing materials for application indicated, and with a proven record of compatibility with surfaces contacted in installation.

B. Cleaners, Primers, and Sealers: Types recommended by sealant or gasket manufacturer.

C. Setting Blocks: Elastomeric material with a Shore A durometer hardness of 85, plus or minus 5.

D. Spacers: Elastomeric blocks or continuous extrusions with a Shore A durometer hardness required by glass manufacturer to maintain glass lites in place for installation indicated.

E. Edge Blocks: Elastomeric material of hardness needed to limit glass lateral movement (side walking).

2.7 FABRICATION OF GLASS AND OTHER GLAZING PRODUCTS

A. Fabricate glass and other glazing products in sizes required to glaze openings indicated for Project, with edge and face clearances, edge and surface conditions, and bite

complying with written instructions of product manufacturer and referenced glazing standard, to comply with system performance requirements.

B. Clean-cut or flat-grind vertical edges of butt-glazed monolithic lites in a manner that produces square edges with slight kerfs at junctions with indoor and outdoor faces.

C. Grind smooth and polish exposed glass edges.

2.8 SECURITY WINDOW FILM (SF)

A. Security Window Film. Optically clear microlayered polyester film, nominally 8 mils (0.008 inch) thick, with a durable acrylic abrasion resistant coating over one surface and a pressure sensitive adhesive on the other. The film is clear and does not contain dyed polyester. The adhesive is pressure-activated, not water- activated, and forms a physical bond, not chemical bond, to the glass. The film is microlayered with both plastic and ductile polyester layers for tear resistance.

1. Physical / Mechanical Performance Properties (nominal):
   a. Film Color: Clear.
   b. Film Thickness (excluding coatings or adhesive liner): Nominal 8 mils
   c. Tensile Strength (ASTM D882):
      1) Base Film: 32,000 psi (MD) / 32,000 psi (TD).
      2) Coated Film: 27,000 psi (MD) / 27,000 psi (TD).
   d. Break Strength (ASTM D882):
      1) Base Film: 250 lb/in (MD) / 250 lb/in (TD).
      2) Coated Film: 215 lb/in (MD) / 215 lb/in (TD).
   e. Percent Elongation at Break (ASTM D882): 1)Base Film: 115 % (MD) / 115 % (TD).
      2) Coated Film: 90 % (MD) / 105 % (TD).
   f. Yield Strength:
      1) Base Film: 12,000 psi (MD).
      2) Coated Film: 15,000 psi (MD).
   g. Percent Elongation at Yield (ASTM D882):
      1) Base Film: 7% (MD).
      2) Coated Film: 8% (MD).
   h. Graves Tear Resistance (ASTM D1004):
      1) Maximum Force (lbs):
         a) Base Film: 40 (MD) / 40 (TD).
         b) Coated Film: 40 (MD) / 40 (TD).
      2) Maximum Extension (in):
         a) Base Film: 0.45 (MD) / 0.65 (TD).
         b) Coated Film: 0.50 (MD) / 0.57 (TD).
      3) Graves Area Tear Resistance (lbs%):
         a) Base Film: 1,100 (MD) / 1,300 (TD).
         b) Coated Film: 1,100 (MD) / 1,300 (TD).
   i. Puncture Propagation Tear Resistance (ASTM D2582):
      1) Coated Film: 9 lbf (MD) / 10 lbf (TD).
   j. Puncture Strength (ASTM D4830):
      1) Material Properties (as supplied).
      2) Coated Film: 185 lbf.
2. Uniformity: No noticeable pin holes, streaks, thin spots, scratches, banding or other optical defects.

3. Variation in Total Transmission across the width: Less than 2 percent over the average at any portion along the length.
4. Identification: Labeled as to Manufacturer as listed in this Section
5. Solar Performance Properties: Film applied to 1/4 inch (6 mm) thick clear glass.
   a. Visible Light Transmission (ASTM E 903): 87 percent.
   b. Visible Reflection (ASTM E 903): Not more than 10 percent.
   c. Ultraviolet Transmission (ASTM E 903): Less than 0.5 percent.
   d. Solar Heat Gain Coefficient (ASTM E 903): 0.79

B. Security Window Film Attachment System: Provide manufacturer's impact protection attachment adhesive.

2.9 GLAZING TYPES

A. Type GL-1: Interior, 1/4", Clear, Tempered, Safety Glazing.

B. Type GL-2: Insulated Glass Unit, Clear, Tempered (similar to G-3) with Security Film

C. Type GL-3: Insulated Glass Unit, Clear, Tempered.
   1. Outer Lite: ¼" Clear float glass, Tempered. ASTM C 1036, Type 1, Class 1, Quality q3.
   2. Coating: Solarban® 65 on Surface # 2
   3. Interspacce:½" Air
   4. Indoor Lite: ¼" Clear float glass, Tempered
   a. Visible Light Transmittance: 70 percent minimum.
   b. Winter Nighttime U-Factor: 0.29 (Btu/hr*ft2*°F) maximum.
   c. Summer daytime U-Factor: 0.27 (Btu/hr*ft2*°F) maximum.
   d. Shading Coefficient: 0.40 maximum.
   e. Solar Heat Gain Coefficient: 0.35 maximum.
   f. Outdoor Visible Light Reflectance: 14 percent maximum.

PART 3 - EXECUTION

3.1 EXAMINATION

A. Examine framing glazing, with Installer present, for compliance with the following:

1. Manufacturing and installation tolerances, including those for size, squareness, and offsets at corners.
2. Presence and functioning of weep system.
3. Minimum required face or edge clearances.
4. Effective sealing between joints of glass-framing members.

B. Proceed with installation only after unsatisfactory conditions have been corrected.

3.2 PREPARATION

C. Clean glazing channels and other framing members receiving glass immediately before glazing. Remove coatings not firmly bonded to substrates.

3.3 GLAZING, GENERAL

A. Comply with combined written instructions of manufacturers of glass, sealants, gaskets, and other glazing materials, unless more stringent requirements are indicated, including those in referenced glazing publications.

B. Glazing channel dimensions, as indicated on Drawings, provide necessary bite on glass, minimum edge and face clearances, and adequate sealant thicknesses, with reasonable tolerances. Adjust as required by Project conditions during installation.

C. Protect glass edges from damage during handling and installation. Remove damaged glass from Project site and legally dispose of off Project site. Damaged glass is glass with edge damage or other imperfections that, when installed, could weaken glass and impair performance and appearance.

D. Apply primers to joint surfaces where required for adhesion of sealants, as determined by preconstruction sealant-substrate testing.

E. Install setting blocks in sill rabbets, sized and located to comply with referenced glazing publications, unless otherwise required by glass manufacturer. Set blocks in thin course of compatible sealant suitable for heel bead.

F. Do not exceed edge pressures stipulated by glass manufacturers for installing glass lites.

G. Provide spacers for glass lites where the length plus width is larger than 50 inches (1270 mm) as follows:

1. Locate spacers directly opposite each other on both inside and outside faces of glass. Install correct size and spacing to preserve required face clearances, unless gaskets and glazing tapes are used that have demonstrated ability to maintain required face clearances and to comply with system performance requirements.
2. Provide 1/8-inch (3-mm) minimum bite of spacers on glass and use thickness equal to sealant width. With glazing tape, use thickness slightly less than final compressed thickness of tape.

H. Provide edge blocking where indicated or needed to prevent glass lites from moving sideways in glazing channel, as recommended in writing by glass manufacturer and according to requirements in referenced glazing publications.

I. Set glass lites in each series with uniform pattern, draw, bow, and similar characteristics.

J. Where wedge-shaped gaskets are driven into one side of channel to pressurize sealant or gasket on opposite side, provide adequate anchorage so gasket cannot walk out when installation is subjected to movement.

K. Square cut wedge-shaped gaskets at corners and install gaskets in a manner recommended by gasket manufacturer to prevent corners from pulling away; seal corner joints and butt joints with sealant recommended by gasket manufacturer.

3.4 GASKET GLAZING (DRY)

A. Fabricate compression gaskets in lengths recommended by gasket manufacturer to fit openings exactly, with stretch allowance during installation.

B. Insert soft compression gasket between glass and frame or fixed stop so it is securely in place with joints miter cut and bonded together at corners.

C. Center glass lites in openings on setting blocks and press firmly against soft compression gasket by inserting dense compression gaskets formed and installed to lock in place against faces of removable stops. Start gasket applications at corners and work toward centers of openings. Compress gaskets to produce a weathertight seal without developing bending stresses in glass. Seal gasket joints with sealant recommended by gasket manufacturer.

D. Install gaskets so they protrude past face of glazing stops.

3.5 SAFETY WINDOW FILM INSTALLATION

A. Film Installation, General:
1. Examine and prep surfaces per manufacture's recommendations.
2. Install in accordance with manufacturer's instructions.
3. Cut film edges neatly and square at a uniform distance of 1/8 inch (3 mm) to 1/16 inch (1.5 mm) of window sealant. Use new blade tips after 3 to 4 cuts.
4. Spray the slip solution, composed of one capful of baby shampoo or dishwashing liquid to 1 gallon of water, on window glass and adhesive to facilitate proper positioning of film.
5. Apply film to glass and lightly spray film with slip solution.
6. Squeegee from top to bottom of window. Spray slip solution to film and squeegee a second time.
7. Upon completion of film application, allow 30 days for moisture from film installation to dry thoroughly, and to allow film to dry flat with no moisture dimples when viewed under normal viewing conditions.
8. If completing an exterior application, check with the manufacturer as to whether edge sealing is required.
9. Clean and protect film per manufacture's recommendations.

3.6 PROTECTION AND CLEANING

A. Protect exterior glass from damage immediately after installation by attaching crossed streamers to framing held away from glass. Do not apply markers to glass surface. Remove nonpermanent labels, and clean surfaces.

B. Protect glass from contact with contaminating substances resulting from construction operations, including weld splatter. If, despite such protection, contaminating substances do come into contact with glass, remove them immediately as recommended by glass manufacturer.

C. Examine glass surfaces adjacent to or below exterior concrete and other masonry surfaces at frequent intervals during construction, but not less than once a month, for build-up of dirt, scum, alkaline deposits, or stains; remove as recommended by glass manufacturer.

D. Remove and replace glass that is broken, chipped, cracked, abraded, or damaged in any way, including natural causes, accidents, and vandalism, during construction period.

E. Wash glass on both exposed surfaces in each area of Project not more than four days before date scheduled for inspections that establish date of Substantial Completion. Wash glass as recommended by glass manufacturer.

END OF SECTION 088000

SECTION 092216 - NON-STRUCTURAL METAL FRAMING

PART 1 - GENERAL

1.1 SUMMARY

A. Section Includes:

1. Nonstructural steel framing.
2. Grid suspension systems.

B. Related Requirements:

1. Section 054000 "Cold-Formed Metal Framing" for exterior and interior load-bearing and structural framing.
2. Section 061000 "Rough Carpentry" for wood blocking, nailers, and supplementary supports incorporated into nonstructural metal-framed assemblies.
3. Section 078413 "Penetration Firestopping" for firestopping at penetrations through fire-resistance-rated assemblies.
4. Section 078443 "Joint Firestopping" for fire-resistive joint systems at the tops and perimeters of fire-resistance-rated partitions.
5. Section 079200 "Joint Sealants" for acoustical sealants at sound-rated partitions.
6. Section 092900 "Gypsum Board" for gypsum board assemblies supported by nonstructural metal framing.
7. Section 095113 "Acoustical Panel Ceilings" for acoustical ceiling suspension systems and panels.

1.2 SUBMITTALS

A. Product Data: For each type of product.

1. Nonstructural steel framing members and accessories.
2. Resilient furring channels.
3. Grid suspension systems.
4. Deflection and firestop track systems.

B. Shop Drawings: For suspended ceiling framing and grid suspension systems.

1. 1. Show layout, hanger locations, member sizes and spacings, supplemental framing, trapezes, bracing, and attachment to building structure.
2. 2. Indicate framing required to support light fixtures, access panels, mechanical and electrical equipment, and other ceiling-mounted items.
3. 3. Include details of connections and coordination with penetrations and obstructions above ceilings.

C. Product Certificates: For each type of nonstructural steel framing product, signed by product manufacturer.

D. Evaluation Reports: For framing members with equivalent corrosion-resistant coatings,

from an evaluation service acceptable to authorities having jurisdiction.

1.3 DELIVERY, STORAGE, AND HANDLING

A. Deliver materials in manufacturer's original, unopened, undamaged containers with identification labels intact.

PART 2 - PRODUCTS

2.1 PERFORMANCE REQUIREMENTS

A. Fire-Test-Response Characteristics: Where indicated on Drawings, provide assemblies incorporating nonstructural steel framing identical to those of assemblies tested for fire resistance in accordance with ASTM E119 by an independent testing agency.

B. STC-Rated Assemblies: Where indicated on Drawings, provide assemblies incorporating nonstructural framing identical to those of assemblies tested in accordance with ASTM E90 and classified in accordance with ASTM E413 by an independent testing agency.

C. Horizontal Deflection: For non-composite wall assemblies, limited to 1/240 of the wall height based on the following horizontal loading:

1. Horizontal Loading: 10 lbf/sq. ft.

2.2 NONSTRUCTURAL STEEL FRAMING

A. Framing Members, General: Comply with requirements in AISI S220 for conditions indicated on Drawings.

1. Protective Coating: ASTM A653/A653M, G40 or coating with demonstrated equivalent corrosion resistance. Galvannealed products are unacceptable.

a. Equivalent Corrosion-Resistant Coating: Evaluation report acceptable to authorities having jurisdiction demonstrates corrosion resistance equivalent to specified protective coating.

B. Studs and Track: Conventional members, roll-formed into standard shapes without surface deformations to stiffen framing members.

1. Minimum Base-Steel Thickness: 0.0179 inch.
2. Minimum Yield Strength: 33 ksi.
3. Depth: As indicated on Drawings.

C. Resilient Furring Channels: 1/2-inch- deep, steel sheet members designed to reduce sound transmission.

2.3 GRID SUSPENSION SYSTEMS

A. Grid Suspension Systems for Gypsum Board Ceilings: ASTM C645, direct-hung system composed of main beams and cross-furring members that interlock.

1. Manufacturers: Subject to compliance with requirements, available manufacturers offering products that may be incorporated into the Work include, but are not limited to, the following:

    a. Armstrong World Industries
    b. CertainTeed; SAINT-GOBAIN
    c. Rockfon; ROCKWOOL International
    d. USG Corporation
    e. Approved Equal.

PART 3 - EXECUTION

3.1 EXAMINATION

A. Examine areas, substrates, and conditions, with Installer present, for compliance with requirements and other conditions affecting performance of the Work.

B. Proceed with installation only after unsatisfactory conditions have been corrected.

3.2 PREPARATION

A. Suspended Assemblies: Coordinate installation of suspension systems with installation of overhead structure to ensure that inserts and other provisions for anchorages to building structure have been installed to receive hangers at spacing required to support the Work and that hangers will develop their full strength.

1. Furnish concrete inserts and other devices required to other trades for installation in advance of time needed for coordination and construction.

3.3 INSTALLATION OF NONSTRUCTURAL METAL FRAMING, GENERAL

A. Installation Standard: ASTM C754.

1. Gypsum Board Assemblies: Also comply with requirements in ASTM C840 that apply to framing installation.

B. Install framing and accessories plumb, square, and true to line, with connections securely fastened.

C. Install supplementary framing, and blocking to support fixtures, equipment services, heavy trim, grab bars, toilet accessories, furnishings, or similar construction.

D. Install bracing at terminations in assemblies.

3.4 INSTALLATION OF NONSTRUCTURAL STEEL FRAMING

A. Install framing system components at spacings indicated on Drawings, but not greater than spacings required by referenced installation standards for assembly types.

B. Where studs are installed directly against exterior masonry walls or dissimilar metals at exterior

walls, install isolation strip between studs and exterior wall.

C. Install studs so flanges within framing system point in same direction.

D. Install track at floors and overhead supports. Extend framing full height to structural supports or substrates above suspended ceilings except where partitions are indicated on Drawings to terminate at suspended ceilings. Continue framing around ducts that penetrate partitions above ceiling.

1. Door Openings: Screw vertical studs at jambs to jamb anchor clips on door frames; install track section (for cripple studs) at head and secure to jamb studs.

    a. Install two studs at each jamb unless otherwise indicated on Drawings.
    b. Extend jamb studs through suspended ceilings and attach to underside of overhead structure unless otherwise indicated on Drawings.

2. Other Framed Openings: Frame openings other than door openings the same as required for door openings unless otherwise indicated on Drawings. Install framing below sills of openings to match framing required above door heads.
3. Fire-Resistance-Rated Partitions: Install framing to comply with fire-resistance-rated assembly indicated on Drawings and support closures to make partitions continuous from floor to underside of solid structure.

    a. Firestop Track: Install to maintain continuity of fire-resistance-rated assembly indicated on Drawings.

4. STC-Rated Partitions: Install framing to comply with STC-rated assembly indicated on Drawings.

E. Z-Shaped Furring Members:

F. Suspended Assemblies: Isolate suspension assemblies from building structure where they abut or are penetrated by building structure to prevent transfer of loading imposed by structural movement.

1. Hangers: Install hangers plumb and free from contact with insulation or other objects within ceiling plenum that are not part of supporting structural or suspension system spaced as indicated on Drawings.

    a. Splay hangers only where required to miss obstructions and offset resulting horizontal forces by bracing, counters playing, or other equally effective means.
    b. Where width of ducts and other construction within ceiling plenum produces hanger spacings that interfere with locations of hangers required to support standard suspension system members, install supplemental suspension members and hangers in the form of trapezes or equivalent devices.

        1) Size supplemental suspension members and hangers to support ceiling loads within performance limits established by referenced installation standards.

    c. Wire Hangers: Secure by looping and wire tying, either directly to structures or to inserts, eye screws, or other devices and fasteners that are secure and appropriate for substrate, and in a manner that will not cause hangers to deteriorate or otherwise fail.
    d. Flat Hangers: Secure to structure, including intermediate framing members, by

attaching to inserts, eye screws, or other devices and fasteners that are secure and appropriate for structure and hanger, and in a manner that will not cause hangers to deteriorate or otherwise fail.

e. Do not connect or suspend framing from ducts, pipes, or conduit.

G. Installation Tolerances for Nonstructural Steel Framing:

1. Framing Members: Install each framing member so fastening surfaces vary not more than 1/8 inch from the plane formed by faces of adjacent framing.
2. Suspended Assemblies: Install suspension systems that are level to within 1/8 inch in 12 ft. measured lengthwise on each member that will receive finishes and transversely between parallel members that will receive finishes.

3.5 INSTALLATION OF GRID SUSPENSION SYSTEMS

A. Grid Suspension Systems: Install in accordance with manufacturer's written instructions. Attach perimeter wall track or angle where grid suspension systems meet vertical surfaces. Mechanically join main beam and cross-furring members to each other and butt-cut to fit into wall track.

B. Installation Tolerances for Grid Suspension Systems: Install suspension systems that are level to within 1/8 inch in 12 ft. measured lengthwise on each member that will receive finishes and transversely between parallel members that will receive finishes.

END OF SECTION 092216

SECTION 092900 - GYPSUM BOARD

PART 1 - GENERAL

1.1 RELATED DOCUMENTS

A. Drawings and general provisions of the Contract, including General and Supplementary Conditions and Division 01 Specification Sections, apply to this Section.

B. Related Requirements:

1. Section 054000 "Cold-Formed Metal Framing" for structural and load-bearing framing that supports gypsum board assemblies.
2. Section 061000 "Rough Carpentry" for wood blocking, nailers, and supplementary supports within gypsum board assemblies.
3. Section 072100 "Thermal Insulation" for sound-attenuation batt insulation installed within gypsum board partitions and above ceilings.
4. Section 078413 "Penetration Firestopping" for firestopping at penetrations through fire-resistance-rated gypsum board assemblies.
5. Section 078443 "Joint Firestopping" for fire-resistive joint systems at the tops and perimeters of fire-resistance-rated gypsum board assemblies.
6. Section 079200 "Joint Sealants" for non-fire-rated sealants at joints between gypsum board assemblies and adjacent construction.
7. Section 092216 "Non-Structural Metal Framing" for framing, furring, and suspension systems supporting gypsum board.
8. Section 099123 "Interior Painting" for primers and finish coatings applied over gypsum board surfaces.

1.2 SUMMARY

A. Section Includes:

1. Interior gypsum board and related joint treatment materials.

1.3 ACTION SUBMITTALS

A. Product Data: For the following:

1. Gypsum wallboard.
2. Gypsum board, Type X.
3. Impact-resistant gypsum board.
4. Mold-resistant gypsum board.
5. Joint treatment materials.
6. Sound-attenuation blankets.
7. Acoustical sealant.

1.4 DELIVERY, STORAGE AND HANDLING

A. Store materials inside under cover and keep them dry and protected against weather, condensation, direct sunlight, construction traffic, and other potential causes of damage. Stack panels flat and supported on risers on a flat platform to prevent sagging.

1.5 FIELD CONDITIONS

A. Environmental Limitations: Comply with ASTM C840 requirements or gypsum board manufacturer's written instructions, whichever are more stringent.

B. Do not install paper-faced gypsum panels until installation areas are enclosed and conditioned.

C. Do not install panels that are wet, moisture damaged, and mold damaged.

1. Indications that panels are wet or moisture damaged include, but are not limited to, discoloration, sagging, or irregular shape.
2. Indications that panels are mold damaged include, but are not limited to, fuzzy or splotchy surface contamination and discoloration.

PART 2 - PRODUCTS

2.1 GYPSUM BOARD, GENERAL

A. Size: Provide maximum lengths and widths available that will minimize joints in each area and that correspond with support system indicated.

2.2 INTERIOR GYPSUM BOARD

A. Gypsum Wallboard: ASTM C1396/C1396M.

1. Manufacturers: Subject to compliance with requirements, provide products by the following:
   a. CertainTeed Gypsum.
   b. National Gypsum Company.
   c. USG Corporation
   d. Or Approved Equal.
2. Thickness: 1/2 inch.
3. Long Edges: Tapered .

B. Gypsum Board, Type X: ASTM C1396/C1396M.

1. Manufacturers: Subject to compliance with requirements, provide products by one of the following:
   a. CertainTeed Gypsum.
   b. National Gypsum Company.
   c. USG Corporation.
   d. Or Approved Equal.
2. Thickness: 5/8 inch.

3. Long Edges: Tapered .
4. Location: Fire Rated Assemblies

C. Impact-Resistant Gypsum Board: ASTM C1396/C1396M gypsum board, tested according to ASTM C1629/C1629M.

1. Manufacturers: Subject to compliance with requirements, provide products by one of the following:
   a. CertainTeed Gypsum.
   b. National Gypsum Company.
   c. USG Corporation.
   d. Or Approved Equal.
2. Core: 5/8 inch , Type X.
3. Long Edges: Tapered.

D. Mold-Resistant Gypsum Board: ASTM C1396/C1396M. With moisture- and mold-resistant core and paper surfaces.

1. Manufacturers: Subject to compliance with requirements, provide products by the following:
   a. USG Corporation.
   b. Or Approved Equal.
2. Core: 5/8 inch , Type X.
3. Long Edges: Tapered.
4. Mold Resistance: ASTM D3273, score of 10 as rated according to ASTM D3274.
5. Location: At Wet & damp interior spaces.

2.3 JOINT TREATMENT MATERIALS

A. General: Comply with ASTM C475/C475M.

B. Joint Tape:

1. Interior Gypsum Board: Paper.

C. Joint Compound for Interior Gypsum Board: For each coat, use formulation that is compatible with other compounds applied on previous or for successive coats.

1. Prefilling: At open joints , rounded or beveled panel edges, and damaged surface areas, use setting-type taping compound.
2. Embedding and First Coat: For embedding tape and first coat on joints, fasteners, and trim flanges, use setting-type taping compound.
   a. Use setting-type compound for installing paper-faced metal trim accessories.
3. Fill Coat: For second coat, use drying-type, all-purpose compound.
4. Finish Coat: For third coat, use drying-type, all-purpose compound.

2.4 AUXILIARY MATERIALS

A. Provide auxiliary materials that comply with referenced installation standards and manufacturer's written instructions.

B. Steel Drill Screws: ASTM C1002 unless otherwise indicated.

1. Use screws complying with ASTM C954 for fastening panels to steel members from 0.033 to 0.112 inch thick.

C. Sound-Attenuation Blankets: Sound-Attenuation Blankets: As specified in Section 072100 "Thermal Insulation"; ASTM C665, Type I, unfaced blankets produced by combining thermosetting resins with mineral fibers manufactured from glass, slag wool, or rock wool.

D. Acoustical Sealant: As recommended by Gypsum Board manufacturer.

PART 3 - EXECUTION

3.1 EXAMINATION

A. Examine areas and substrates including welded hollow-metal frames and support framing, with Installer present, for compliance with requirements and other conditions affecting performance of the Work.

B. Examine panels before installation. Reject panels that are wet, moisture damaged, and mold damaged.

C. Proceed with installation only after unsatisfactory conditions have been corrected.

3.2 INSTALLATION AND FINISHING OF PANELS, GENERAL

A. Comply with ASTM C840.

B. Install ceiling panels across framing to minimize the number of abutting end joints and to avoid abutting end joints in central area of each ceiling. Stagger abutting end joints of adjacent panels not less than one framing member.

C. Install panels with face side out. Butt panels together for a light contact at edges and ends with not more than 1/16 inch of open space between panels. Do not force into place.

D. Locate edge and end joints over supports, except in ceiling applications where intermediate supports or gypsum board back-blocking is provided behind end joints. Do not place tapered edges against cut edges or ends. Stagger vertical joints on opposite sides of partitions. Do not make joints other than control joints at corners of framed openings.

E. Form control and expansion joints with space between edges of adjoining gypsum panels.

F. Cover both faces of support framing with gypsum panels in concealed spaces (above ceilings, etc.), except in chases braced internally.

1. Unless concealed application is indicated or required for sound, fire, air, or smoke ratings, coverage may be accomplished with scraps of not less than 8 sq. ft. in area.
2. Fit gypsum panels around ducts, pipes, and conduits.

3. Where partitions intersect structural members projecting below underside of floor/roof slabs and decks, cut gypsum panels to fit profile formed by structural members; allow 1/4- to 3/8-inch- wide joints to install sealant.

G. Isolate perimeter of gypsum board applied to non-load-bearing partitions at structural abutments. Provide 1/4- to 1/2-inch- wide spaces at these locations and trim edges with edge trim where edges of panels are exposed. Seal joints between edges and abutting structural surfaces with acoustical sealant.

H. Attachment to Steel Framing: Attach panels so leading edge or end of each panel is attached to open (unsupported) edges of stud flanges first.

I. STC-Rated Assemblies: Seal construction at perimeters, behind control joints, and at openings and penetrations with a continuous bead of acoustical sealant. Install acoustical sealant at both faces of partitions at perimeters and through penetrations. Comply with ASTM C919 and with manufacturer's written instructions for locating edge trim and closing off sound-flanking paths around or through assemblies, including sealing partitions above acoustical ceilings.

J. Install sound-attenuation blankets specified in Section 072100 "Thermal Insulation" before installing gypsum panels unless blankets are readily installed after panels have been installed on one side.

3.3 INSTALLATION OF INTERIOR GYPSUM BOARD

A. Install interior gypsum board in the following locations:

1. Wallboard Type: As indicated on Drawings .
2. Type X: As indicated on Drawings and at high-traffic areas, including corridors, vestibules, stair enclosures, and other locations subject to frequent impact or abuse.
3. Impact-Resistant Type: As indicated on Drawings and at high-traffic areas, including corridors, vestibules, stair enclosures, and other locations subject to frequent impact or abuse.
4. Mold-Resistant Type: At all toilet rooms, locker rooms, wet and damp interior spaces, and other locations indicated on Drawings.

B. Single-Layer Application:

1. On ceilings, apply gypsum panels before wall/partition board application to greatest extent possible and at right angles to framing unless otherwise indicated.
2. On partitions/walls, apply gypsum panels vertically (parallel to framing) unless otherwise indicated or required by fire-resistance-rated assembly, and minimize end joints.
   a. Stagger abutting end joints not less than one framing member in alternate courses of panels.
3. On Z-shaped furring members, apply gypsum panels vertically (parallel to framing) with no end joints. Locate edge joints over furring members.
4. Fastening Methods: Apply gypsum panels to supports with steel drill screws.

3.4 FINISHING GYPSUM BOARD

A. General: Treat gypsum board joints, interior angles, edge trim, control joints, penetrations, fastener heads, surface defects, and elsewhere as required to prepare gypsum board surfaces for decoration. Promptly remove residual joint compound from adjacent surfaces.

B. Prefill open joints , rounded or beveled edges, and damaged surface areas.

C. Apply joint tape over gypsum board joints, except for trim products specifically indicated as not intended to receive tape.

D. Gypsum Board Finish Levels: Finish panels to levels indicated below and according to ASTM C840:

1. Level 4: At panel surfaces that will be exposed to view unless otherwise indicated .
2. Level 5: At panel surfaces scheduled to receive vinyl wall covering.
3. Primer and its application to surfaces are specified in Section 099123 "Interior Painting."

3.5 PROTECTION

A. Protect adjacent surfaces from drywall compound and promptly remove from floors and other non-drywall surfaces. Repair surfaces stained, marred, or otherwise damaged during drywall application.

B. Protect installed products from damage from weather, condensation, direct sunlight, construction, and other causes during remainder of the construction period.

C. Remove and replace panels that are wet, moisture damaged, and mold damaged.

1. Indications that panels are wet or moisture damaged include, but are not limited to, discoloration, sagging, or irregular shape.
2. Indications that panels are mold damaged include, but are not limited to, fuzzy or splotchy surface contamination and discoloration.

END OF SECTION 092900

SECTION 093013 - CERAMIC TILING

PART 1 - GENERAL

1.1 SUMMARY

A. Section Includes:

1. Quarry tile.
2. Porcelain tile.
3. Ceramic mosaic tile.
4. Glazed wall tile.
5. Thresholds.
6. Tile backing panels.
7. Setting material.
8. Grout materials.

B. Related Requirements:

1. Section 079200 "Joint Sealants" for sealing of movement joints in tile surfaces.
2. Section 092900 "Gypsum Board" for tile backing panels.

1.2 ACTION SUBMITTALS

A. Product Data: For each type of product.

B. Shop Drawings: Show locations, plans, and elevations, of each type of tile and tile pattern. Show widths, details, and locations of movement joints in tile substrates and finished tile surfaces. Show thresholds.

C. Samples for Verification:

1. Full-size units of each type and composition of tile and for each color and finish required. For ceramic mosaic tile in color blend patterns, provide full sheets of each color blend.
2. Stone thresholds in 6-inch lengths.
3. Metal flooring transitions 6-inch lengths.

1.3 INFORMATIONAL SUBMITTALS

A. Qualification Data: For Installer.

B. Product Certificates: For each type of product, including product use classification.

1.4 MAINTENANCE MATERIAL SUBMITTALS

A. Extra Stock Material: Furnish extra materials, from the same production run, to Owner that match products installed and that are packaged with protective covering for storage and identified with labels describing contents.

1. Tile and Trim Units: Furnish quantity of full-size units equal to 3 percent of amount installed for each type, composition, color, pattern, and size indicated.
2. Grout: Furnish quantity of grout equal to 3 percent of amount installed for each type, composition, and color indicated.

1.5 QUALITY ASSURANCE

A. Installer Qualifications:

1. Installer employs only Ceramic Tile Education Foundation Certified Installers or installers recognized by the U.S. Department of Labor as Journeyman Tile Layers for Project.

1.6 DELIVERY, STORAGE, AND HANDLING

A. Deliver and store packaged materials in original containers with seals unbroken and labels intact until time of use. Comply with requirements in ANSI A137.1 for labeling tile packages.

B. Store tile and cementitious materials on elevated platforms, under cover, and in a dry location.

C. Store aggregates where grading and other required characteristics can be maintained and contamination can be avoided.

D. Store liquid materials in unopened containers and protected from freezing.

1.7 FIELD CONDITIONS

A. Environmental Limitations: Do not install tile until construction in spaces is complete and ambient temperature and humidity conditions are maintained at the levels indicated in referenced standards and manufacturer's written instructions.

1.8 WARRANTY

A. System Warranty: Manufacturer's non-prorated comprehensive warranty that agrees to repair and replace defective installation areas, material, and labor that fail under normal usage within specified warranty period.

1. Warranty Period: Five years from date of Product Purchase.

PART 2 - PRODUCTS

2.1 SOURCE LIMITATIONS

A. Tile: Obtain tile of each type and color or finish from single source or producer.

1. Obtain tile of each type and color or finish from same production run and of consistent quality in appearance and physical properties for each contiguous area.
2. Basis-of-Design Product: The Basis-of-Design product is identified on the Drawings. Subject to compliance with requirements, provide the specified product or a comparable product by one of the following manufacturers:

a. American Olean
b. Daltile (Mohawk Industries)
c. Crossville, Inc
d. Approved equal

3. Obtain setting and grouting materials, except for unmodified portland cement and aggregate, from single manufacturer.
4. Obtain underlayment from manufacturer of setting and grouting materials.
5. Obtain waterproof membrane, crack isolation, and other required membranes from manufacturer of setting and grouting materials.
6. Obtain joint sealants from manufacturer of setting and grouting materials.

B. Accessory Products: Obtain each of the following products specified in this Section from a single manufacturer:

1. Stone thresholds.
2. Backer units.

2.2 PRODUCTS, GENERAL

A. ANSI Ceramic Tile Standard: Provide tile that complies with ANSI A137.1 for types, compositions, and other characteristics indicated.

1. Provide tile complying with Standard Grade requirements unless otherwise indicated .

B. ANSI Standards for Tile Installation Materials: Provide materials complying with ANSI A108.02, ANSI standards referenced in other Part 2 articles, ANSI standards referenced by TCNA installation methods specified in tile installation schedules, and other requirements specified.

C. Factory Blending: For tile exhibiting color variations within ranges, blend tile in factory and package so tile units taken from one package show same range in colors as those taken from other packages and match approved Samples.

D. Mounting: For factory-mounted tile, provide back- or edge-mounted tile assemblies as standard with manufacturer unless otherwise indicated.

E. Factory-Applied Temporary Protective Coating: Where indicated under tile type, protect exposed surfaces of tile against adherence of mortar and grout by precoating with continuous film of petroleum paraffin wax, applied hot. Do not coat unexposed tile surfaces.

2.3 <u>QUARRY TILE</u>

A. Quarry Tile Type: Unglazed .

1. Manufacturers: Subject to compliance with requirements, available manufacturers offering products that may be incorporated into the Work include, but are not limited to, the following :

a. American Olean; a brand of Dal-Tile Corporation
b. Daltile; a brand of Dal-Tile Corporation
c. Quarry Tile Company.
d. Or approved equal

2. Face Size: 6 by 6 inches .
3. Thickness: 1/2 inch .
4. Wearing Surface: Abrasive aggregate embedded in surface .
5. Product Use Classification: Interior, Wet (IW) .
6. Physical Properties: Chemical resistant when tested with indicated chemicals in accordance with ASTM C650.
7. Tile Color and Pattern: As indicated by manufacturer's designations .
8. Grout Color: As selected by Architect from manufacturer's full range .
9. Precoat with temporary protective coating.
10. Trim Units: Coordinated with sizes and coursing of adjoining flat tile where applicable and matching characteristics of adjoining flat tile . Provide shapes as follows, selected from manufacturer's standard shapes:

    a. Base: Coved with surface bullnose top edge , face size 6 by 6 inches .

2.4 PORCELAIN TILE

A. Porcelain Tile Type: Unglazed .

1. Manufacturers: Subject to compliance with requirements, available manufacturers offering products that may be incorporated into the Work include, but are not limited to, the following :

    a. American Olean; a brand of Dal-Tile Corporation
    b. Crossville, Inc.
    c. Daltile; a brand of Dal-Tile Corporation
    d. Or approved equal

2. Thickness:3/8 inch .
3. Product Use Classification: Interior, Dry (ID) .
4. Physical Properties: Chemical resistant when tested with indicated chemicals in accordance with ASTM C650.
5. Tile Color, Glaze, and Pattern: As indicated by manufacturer's designations .
6. Grout Color: As selected by Architect from manufacturer's full range .
7. Precoat with temporary protective coating.
8. Trim Units: Coordinated with sizes and coursing of adjoining flat tile where applicable and matching characteristics of adjoining flat tile . Provide shapes as follows, selected from manufacturer's standard shapes:

    a. Base Cap: Surface bullnose, module size same as adjoining flat tile .
    b. External Corners: Surface bullnose, module size.
    c. Internal Corners: Field-butted square corners.

2.5 CERAMIC MOSAIC TILE

A. Ceramic Mosaic Tile Type: Unglazed .

1. Manufacturers: Subject to compliance with requirements, available manufacturers offering products that may be incorporated into the Work include, but are not limited to, the following :

    a. Shaw Contract,
    b. American Olean; a brand of Dal-Tile Corporation

c. Daltile; a brand of Dal-Tile Corporation
d. or approved equal

2. Surface: Slip resistant, with abrasive admixture.
3. Product Use Classification: Interior, Dry (ID) .
4. Physical Properties: Chemical resistant when tested with indicated chemicals in accordance with ASTM C650.
5. Tile Color and Pattern: As indicated by manufacturer's designations .
6. Grout Color: As selected by Architect from manufacturer's full range .

2.6 GLAZED WALL TILE

A. Glazed Wall Tile Type:

1. Module Size: (Basis of design) .
2. Face Size Variation: Rectified.
3. Thickness: 5/16 inch.
4. Tile Color and Pattern: As indicated by manufacturer's designations .
5. Grout Color: As selected by Architect from manufacturer's full range .
6. Mounting:

a. Factory, back mounted.

2.7 THRESHOLDS

A. General: Fabricate to sizes and profiles indicated or required to provide transition between adjacent floor finishes.

1. Bevel edges at 1:2 slope, with lower edge of bevel aligned with or up to 1/16 inch above adjacent floor surface. Finish bevel to match top surface of threshold. Limit height of threshold to 1/2 inch or less above adjacent floor surface.

B. Marble Thresholds: ASTM C503/C503M, with a minimum abrasion resistance of **10** in accordance with ASTM C1353/C1353M or ASTM C241/C241M and with honed finish.

1. Description:

a. Uniform, fine- to medium-grained white stone with gray veining.

2.8 TILE BACKING PANELS

A. Cementitious Backer Units: ANSI A118.9 and ASTM C1288 or ASTM C1325, with manufacturer's standard edges in maximum lengths available to minimize end-to-end butt joints.

1. Thickness: 1/2 inch .
2. Mold Resistance: ASTM D3273, score of 10 as rated in accordance with ASTM D3274.

B. General: Manufacturer's standard product that complies with ANSI A118.10 [and is recommended by manufacturer for application indicated. Include reinforcement and accessories recommended by manufacturer.

C. Portland Cement Mortar (Thickset) Installation Materials: ANSI A108.02.

1. Cleavage Membrane: Installer's option of material that complies with ANSI A108.02, paragraph 3.8.
2. Expanded Metal Lath: Diamond-mesh lath complying with ASTM C847.

    a. Base Metal and Finish for Interior Applications: Uncoated or zinc-coated (galvanized) steel sheet, with uncoated steel sheet painted after fabrication into lath.
    b. Base Metal and Finish for Exterior Applications: Zinc-coated (galvanized) steel sheet.
    c. Configuration over Studs and Furring: Flat.
    d. Configuration over Solid Surfaces: Self-furring.
    e. Weight: 2.5 lb/sq. yd..

3. Latex Additive: Manufacturer's standard water emulsion, serving as replacement for part or all of gaging water, of type specifically recommended by latex-additive manufacturer for use with field-mixed portland cement and aggregate mortar bed.

2.9 GROUT MATERIALS

A. Sand-Portland Cement Grout: ANSI A108.10, consisting of white or gray cement and white or colored aggregate as required to produce color indicated.

B. Standard Cement Grout: ANSI A118.6.

C. Grout for Pregrouted Tile Sheets: Same product used in factory to pregrout tile sheets.

D. Trowelable Underlayments and Patching Compounds: Latex-modified, portland cement-based formulation provided or approved by manufacturer of tile-setting and adhesive materials for installations indicated.

E. Vapor-Retarder Membrane: Polyethylene sheeting, ASTM D4397, 4.0 mils thick.

F. Temporary Protective Coating: Formulated to protect exposed surfaces of tile against adherence of mortar and grout; compatible with tile, mortar, and grout products and easily removable after grouting is completed without damaging grout or tile.

G. Tile Cleaner: A neutral cleaner capable of removing soil and residue without harming tile and grout surfaces, specifically approved for materials and installations indicated by tile and grout manufacturers.

H. Grout Sealer: Grout manufacturer's standard product for sealing grout joints that does not change color or appearance of grout.

PART 3 - EXECUTION

3.1 EXAMINATION

A. Examine substrates, areas, and conditions where tile will be installed, with Installer present, for compliance with requirements for installation tolerances and other conditions affecting performance of the Work.

1. Verify that substrates for setting tile are firm; dry; clean; free of coatings that are

incompatible with tile-setting materials, including curing compounds and other substances that contain soap, wax, oil, or silicone; and comply with flatness tolerances required by ANSI A108.01 for installations indicated.

2. Verify that concrete substrates for tile floors installed with adhesives bonded mortar bed or thinset mortar comply with surface finish requirements in ANSI A108.01 for installations indicated.

    a. Verify that surfaces that received a steel trowel finish have been mechanically scarified.
    b. Verify that protrusions, bumps, and ridges have been removed by sanding or grinding.

3. Verify that installation of grounds, anchors, recessed frames, electrical and mechanical units of work, and similar items located in or behind tile has been completed.
4. Verify that joints and cracks in tile substrates are coordinated with tile joint locations; if not coordinated, adjust joint locations in consultation with Architect.

B. Proceed with installation only after unsatisfactory conditions have been corrected.

3.2 PREPARATION

A. Remove coatings, including curing compounds or other coatings, that are incompatible with tile-setting materials.

B. Fill cracks, holes, and depressions in concrete substrates for tile floors installed with adhesives or thinset mortar with trowelable leveling and patching compound specifically recommended by tile-setting material manufacturer.

C. Where indicated, prepare substrates to receive waterproof membrane by applying a reinforced mortar bed that complies with ANSI A108.1 and is sloped **1/4 inch per foot** toward drains.

D. Blending: For tile exhibiting color variations, verify that tile has been factory blended and packaged so tile units taken from one package show same range of colors as those taken from other packages and match approved Samples. If not factory blended, either return to manufacturer or blend tiles at Project site before installing.

E. Substrate Flatness:

1. For tile shorter than 15 inches, confirm that structure or substrate is limited to variation of 1/4 inch in 10 ft. from the required plane, and no more than 1/16 inch in 12 inches when measured from tile surface high points.
2. For large format tile, tile with at least one edge 15 inches or longer, confirm that structure or substrate is limited to 1/8 inch in 10 ft. from the required plane, and no more than 1/16 inch in 24 inches when measured from tile surface high points.

3.3 INSTALLATION OF CERAMIC TILE SYSTEM

A. Install tile backing panels and treat joints in accordance with ANSI A108.11 and manufacturer's written instructions for type of application indicated.

B. Install crack isolation membrane to comply with ANSI A108.17 and manufacturer's written instructions to produce membrane of uniform thickness that is bonded securely to substrate.

1. Allow crack isolation membrane to cure before installing tile or setting materials over it.

C. Mix mortars and grouts to comply with referenced standards and mortar and grout manufacturers' written instructions.

1. Add materials, water, and additives in accurate proportions.
2. Obtain and use type of mixing equipment, mixer speeds, mixing containers, mixing time, and other procedures to produce mortars and grouts of uniform quality with optimum performance characteristics for installations indicated.

D. Install tile in accordance with TCNA's "Handbook for Ceramic, Glass, and Stone Tile Installation" for TCNA installation methods specified in tile installation schedules. Comply with parts of ANSI A108 series that are referenced in TCNA installation methods and specified in tile installation schedules, and apply to types of setting and grouting materials used.

1. Extend tile work into recesses and under or behind equipment and fixtures to form complete covering without interruptions unless otherwise indicated. Terminate work neatly at obstructions, edges, and corners without disrupting pattern or joint alignments.
2. Accurately form intersections and returns. Perform cutting and drilling of tile without marring visible surfaces. Carefully grind cut edges of tile abutting trim, finish, or built-in items for straight aligned joints. Fit tile closely to electrical outlets, piping, fixtures, and other penetrations so plates, collars, or covers overlap tile.
3. Provide manufacturer's standard trim shapes where necessary to eliminate exposed tile edges.
4. Where accent tile differs in thickness from field tile, vary setting-bed thickness so that tiles are flush.
5. Jointing Pattern: Lay tile in grid pattern unless otherwise indicated. Lay out tile work and center tile fields in both directions in each space or on each wall area. Lay out tile work to minimize use of pieces that are less than half of a tile. Provide uniform joint widths unless otherwise indicated.

    a. For tile mounted in sheets, make joints between tile sheets same width as joints within tile sheets, so joints between sheets are not apparent in finished Work.
    b. Where adjoining tiles on floor, base, walls, or trim are specified or indicated to be same size, align joints.
    c. Where tiles are specified or indicated to be whole integer multiples of adjoining tiles on floor, base, walls, or trim, align joints unless otherwise indicated.

6. Lay out tile wainscots to dimensions indicated or to next full tile beyond dimensions indicated.

E. Movement Joints: Provide movement joints and other sealant-filled joints, including control, contraction, and isolation joints, where indicated on Drawings. Form joints during installation of setting materials, mortar beds, and tile. Keep joints free of dirt, debris, and setting materials prior to filling with sealants. Do not saw-cut joints after installing tiles.

1. Where joints occur in concrete substrates, locate joints in tile surfaces directly above them.

F. Thresholds: Install stone and solid surface thresholds in same type of setting bed as adjacent floor unless otherwise indicated.

G. Grout Sealer: Apply grout sealer to cementitious grout joints in tile floors in accordance with manufacturer's written instructions. As soon as sealer has penetrated grout joints, remove excess sealer and sealer from tile faces by wiping with soft cloth.

3.4 FIELD QUALITY CONTROL

A. Nonconforming Work:

1. Waterproof membrane will be considered defective if water level has dropped.
2. Remove and replace defective components and retest.

3.5 ADJUSTING AND CLEANING

A. Remove and replace tile that is damaged or that does not match adjoining tile. Provide new matching units, installed as specified and in a manner to eliminate evidence of replacement.

B. Cleaning: On completion of placement and grouting, clean all ceramic tile surfaces so they are free of foreign matter.

1. Remove grout residue from tile as soon as possible.
2. Clean grout smears and haze from tile in accordance with tile and grout manufacturer's written instructions. Use only cleaners recommended by tile and grout manufacturers and only after determining that cleaners are safe to use by testing on samples of tile and other surfaces to be cleaned. Protect metal surfaces and plumbing fixtures from effects of cleaning. Flush surfaces with clean water before and after cleaning.

3.6 PROTECTION

A. Protect installed tile work with kraft paper or other heavy covering during construction period to prevent staining, damage, and wear. If recommended by tile manufacturer, apply coat of neutral protective cleaner to completed tile walls and floors.

B. Prohibit foot and wheel traffic from tiled floors for at least seven days after grouting is completed.

C. Before final inspection, remove protective coverings and rinse neutral protective cleaner from tile surfaces.

END OF SECTION 093013

SECTION 095113 - ACOUSTICAL PANEL CEILINGS

PART 1 - GENERAL

1.1 RELATED DOCUMENTS

A. Drawings and general provisions of the Contract, including General and Supplementary Conditions and Division 01 Specification Sections, apply to this Section.

1.2 SUMMARY

A. Section includes acoustical panels and exposed suspension systems for interior ceilings.

1.3 ACTION SUBMITTALS

A. Product Data: For each type of product. Product Data shall include published acoustical test data demonstrating compliance with NRC, CAC, and fire performance requirements specified.

B. Samples: For each exposed product and for each color and texture specified, 6 inches in size.

C. Samples for Initial Selection: For components with factory-applied finishes.

1.4 CLOSEOUT SUBMITTALS

A. Maintenance Data: For finishes to include in maintenance manuals.

1.5 MAINTENANCE MATERIAL SUBMITTALS

A. Furnish extra materials, from the same product run, that match products installed and that are packaged with protective covering for storage and identified with labels describing contents.

1. Suspension-System Components: Quantity of each exposed component equal to 2 percent of quantity installed.
2. Hold-Down Clips: Equal to 2 percent of quantity installed.
3. Impact Clips: Equal to 2 percent of quantity installed.

1.6 DELIVERY, STORAGE, AND HANDLING

A. Deliver acoustical panels, suspension-system components, and accessories to Project site and store them in a fully enclosed, conditioned space where they will be protected against damage from moisture, humidity, temperature extremes, direct sunlight, surface contamination, and other causes.

B. Before installing acoustical panels, permit them to reach room temperature and a stabilized moisture content.

1.7 WARRANTY

A. Manufacturer's Warranty: Manufacturer agrees to replace suspension system components that fail in materials within specified warranty period.

1. Failures include, but are not limited to, the following:
   a. Deterioration of metals, metal finishes, and other materials beyond normal use including 50 percent or greater red rust.
2. Warranty Period: 10 years from date of Substantial Completion.

PART 2 - PRODUCTS

2.1 MANUFACTURERS

A. Source Limitations: Obtain each type of acoustical ceiling panel and its supporting suspension system from single source from single manufacturer.

2.2 ACOUSTICAL PANELS

A. Basis-of-Design Products: Subject to compliance with requirements, provide acoustical ceiling panel types indicated below, or approved equal. Locations of each panel type shall be as indicated on the reflected ceiling plans.

B. Acoustical Panel Standard: Provide manufacturer's standard panels in accordance with ASTM E1264 and designated by type, form, pattern, acoustical rating, and light reflectance unless otherwise indicated.

1. Education Acoustical Ceiling Panels (Typical): Armstrong School Zone Fine Fissured, square lay-in, white, 24 by 24 inches by 3/4 inch, 15/16-inch edge profile, for use in typical acoustical ceiling panel locations unless otherwise indicated. Provide Armstrong Prelude 15/16-inch suspension system, or approved equal.
2. Food Preparation Area Acoustical Ceiling Panels: Armstrong Kitchen Zone, square lay-in, white, 24 by 24 inches by 5/8 inch, 15/16-inch edge profile, for use only in food preparation areas as indicated on reflected ceiling plans. Provide Armstrong Prelude 15/16-inch suspension system, or approved equal.
3. Wet Area Acoustical Ceiling Panels: Armstrong Ceramaguard Fine Fissured, square lay-in, white, 24 by 24 inches by 5/8 inch, 15/16-inch edge profile, for use only in wet areas, including shower rooms, as indicated on reflected ceiling plans. Provide Armstrong Prelude 15/16-inch suspension system, or approved equal.

C. Performance Requirements: Provide acoustical ceiling panels complying with published performance characteristics of specified basis-of-design products and the following requirements, unless more stringent requirements are indicated on the Drawings:

1. Noise Reduction Coefficient (NRC): As published for specified panel type.

2. Ceiling Attenuation Class (CAC): Minimum 35 for spaces requiring sound isolation above ceilings.

3. Light Reflectance (LR): Minimum 0.80, unless otherwise indicated.

4. Fire Performance:

a. Class A surface burning characteristics when tested in accordance with ASTM E84.

5. Mold and Humidity Resistance:

a. Panels shall be resistant to mold growth and suitable for installation in spaces with relative humidity up to 95 percent without visible sag, warping, or deterioration.

2.3 Color:

1. White, unless otherwise indicated on Drawings.

2.4 METAL SUSPENSION SYSTEM

A. Metal Suspension-System Standard: Provide manufacturer's standard, direct-hung, metal suspension system and accessories in accordance with ASTM C635/C635M and designated by type, structural classification, and finish indicated.

B. Exposed Suspension System: Armstrong Prelude 15/16-inch exposed tee suspension system, or approved equal, compatible with square lay-in acoustical ceiling panels specified. Do not provide beveled tegular, angled tegular, reveal-edge, narrow-face, concealed, or other non-square lay-in panel edge configurations.

1. Face Finish: Painted white.

2.5 ACCESSORIES

A. Attachment Devices: Size for five times the design load indicated in ASTM C635/C635M, Table 1, "Direct Hung," unless otherwise indicated. Comply with seismic design requirements.

B. Wire Hangers, Braces, and Ties: Provide wires as follows:

1. Zinc-Coated, Carbon-Steel Wire: ASTM A641/A641M, Class 1 zinc coating, soft temper.
2. Size: Wire diameter sufficient for its stress at three times hanger design load (ASTM C635/C635M, Table 1, "Direct Hung") will be less than yield stress of wire, but not less than 0.106-inch- diameter wire.

2.6 METAL EDGE MOLDINGS AND TRIM

A. Roll-Formed, Sheet-Metal Edge Moldings and Trim: Type and profile indicated or, if not indicated, manufacturer's standard moldings for edges and penetrations that comply with seismic design requirements; formed from sheet metal of same material, finish, and color as that used for exposed flanges of suspension-system runners.

1. Edge moldings shall fit acoustic panel edge details and suspension systems indicated and match width and configuration of exposed runners unless otherwise indicated.
2. For circular penetrations of ceiling, provide edge moldings fabricated to diameter required to fit penetration exactly.

PART 3 - EXECUTION

3.1 EXAMINATION

A. Examine substrates, areas, and conditions, including structural framing to which acoustical panel ceilings attach or abut, with Installer present, for compliance with requirements specified in this and other Sections that affect ceiling installation and anchorage and with requirements for installation tolerances and other conditions affecting performance of acoustical panel ceilings.

B. Examine acoustical panels before installation. Reject acoustical panels that are wet, moisture damaged, or mold damaged.

C. Proceed with installation only after unsatisfactory conditions have been corrected.

3.2 PREPARATION

A. Measure each ceiling area and establish layout of acoustical panels to balance border widths at opposite edges of each ceiling. Avoid using less-than-half-width panels at borders unless otherwise indicated, and comply with layout indicated on reflected ceiling plans.

B. Layout openings for penetrations centered on the penetrating items.

3.3 INSTALLATION

A. Install acoustical panel ceilings in accordance with ASTM C636/C636M and manufacturer's written instructions.

B. Suspend ceiling hangers from building's structural members and as follows:

1. Install hangers plumb and free from contact with insulation or other objects within ceiling plenum that are not part of supporting structure or of ceiling suspension system.
2. Where width of ducts and other construction within ceiling plenum produces hanger spacings that interfere with location of hangers at spacings required to support standard suspension-system members, install supplemental suspension members and hangers in form of trapezes or equivalent devices.
3. Secure wire hangers to ceiling-suspension members and to supports above with a minimum of three tight turns. Connect hangers directly to structure or to inserts, eye screws, or other devices that are secure and appropriate for substrate and that will not deteriorate or otherwise fail due to age, corrosion, or elevated temperatures.
4. Secure flat, angle, channel, and rod hangers to structure, including intermediate framing members, by attaching to inserts, eye screws, or other devices that are secure and appropriate for both the structure to which hangers are attached and the type of hanger involved. Install hangers in a manner that will not cause them to deteriorate or fail due to age, corrosion, or elevated temperatures.
5. When steel framing does not permit installation of hanger wires at spacing required, install carrying channels or other supplemental support for attachment of hanger wires.
6. Space hangers not more than 48 inches o.c. along each member supported directly from hangers unless otherwise indicated; provide hangers not more than 8 inches from ends of each member.
7. Size supplemental suspension members and hangers to support ceiling loads within performance limits established by referenced standards.

C. Install edge moldings and trim of type indicated at perimeter of acoustical ceiling area and where necessary to conceal edges of acoustical panels.

1. Do not use exposed fasteners, including pop rivets, on moldings and trim.

D. Install suspension-system runners so they are square and securely interlocked with one another. Remove and replace dented, bent, or kinked members.

E. Install acoustical panels with undamaged edges and fit accurately into suspension-system runners and edge moldings. Scribe and cut panels at borders and penetrations to provide precise fit.

1. For square-edged panels, install panels with edges fully hidden from view by flanges of suspension-system runners and moldings.
2. For reveal-edged panels on suspension-system runners, install panels with bottom of reveal in firm contact with top surface of runner flanges.
3. For reveal-edged panels on suspension-system members with box-shaped flanges, install panels with reveal surfaces in firm contact with suspension-system surfaces and panel faces flush with bottom face of runners.
4. Paint cut edges of panel remaining exposed after installation; match color of exposed panel surfaces using coating recommended in writing for this purpose by acoustical panel manufacturer.

3.4 ERECTION TOLERANCES

A. Suspended Ceilings: Install main and cross runners level to a tolerance of 1/8 inch in 12 ft., non-cumulative.

B. Moldings and Trim: Install moldings and trim to substrate and level with ceiling suspension system to a tolerance of 1/8 inch in 12 ft., non-cumulative.

3.5 CLEANING

A. Clean exposed surfaces of acoustical panel ceilings, including trim, edge moldings, and suspension-system members. Comply with manufacturer's written instructions for cleaning and touchup of minor finish damage.

B. Remove and replace ceiling components that cannot be successfully cleaned and repaired to permanently eliminate evidence of damage.

END OF SECTION 095113

095126 - LINEAR WOOD PANEL CEILINGS

PART 1 - GENERAL

1.1 RELATED DOCUMENTS

Drawings and general conditions of Contract, including General and Supplementary Conditions and Divisions-1 Specification sections apply to work of this section.

1.2 SUMMARY

a) Section Includes:

1. Linear wood panel ceiling system, ceiling type LWP-1.
2. Exposed grid suspension system.
3. Wire hangers, fasteners, main runners, cross tees, wall angle moldings and accessories.

b) Related Sections:

1. Section 09 53 00 - Acoustical Ceiling Suspension Assembly
2. Section 09 20 00 - Gypsum Board
3. Section 09 22 16 - Non-Structural Metal Framing
4. Divisions 23 (15) - HVAC
5. Division 26 (16) Sections - Electrical Work

c) Alternates

1. Prior Approval: Unless otherwise provided for in the Contract documents, submit proposed product substitutions no later than TEN (10) working days prior to the date established for receipt of bids. Acceptability of a proposed substitution is contingent upon the Architect's review and acceptance. Approved products will be set forth by the Addenda. If a substitution is included in a Bid and is not approved by an Addendum, the specified products shall be provided as in place of the substitute without additional compensation.
2. Submittals, which do not provide adequate data for the product evaluation, will not be considered. The proposed substitution must meet all requirements of this section, including but not necessarily limited to, the following: Single source materials suppliers (if specified in Section 1.5); panel design, size, composition, color, and finish; suspension system component profiles and sizes; compliance with the referenced standards.

1.3 REFERENCES

a) American Society for Testing and Materials (ASTM):

1. ASTM A 641 Standard Specification for Zinc-Coated (Galvanized) Carbon Steel Wire.
2. ASTM A 653 Standard Specification for Steel Sheet, Zinc-Coated (Galvanized) by the Hot- Dip Process.
3. ASTM A 1008 Standard Specification for Steel, Sheet, and Cold Rolled Carbon, Structural, High-Strength Low-Alloy and High-Strength Low-Alloy with Improved Formability.

4. ASTM C 635 Standard Specification for Metal Suspension Systems for Acoustical Tile and Lay-in Panel Ceilings.
5. ASTM C 636 Recommended Practice for Installation of Metal Ceiling Suspension Systems for Acoustical Tile and Lay-in Panels.
6. ASTM E 84 Standard Test Method for Surface Burning Characteristics of Building Materials.
7. ASTM E 580 Application of Ceiling Suspension Systems for Acoustical Tile and Lay-In Panels in Areas Requiring Seismic Restraint.
8. ASTM C 423 Sound Absorption and Sound Absorption Coefficients by the Reverberation Room Method.
9. ASTM E 1264 Classification for Acoustical Ceiling Products.
10. Hardwood Plywood & Veneer Association (HPVA)
11. International Building Code
12. ASHRAE Standard 62 1 2004 Ventilation for Acceptable Indoor Air Quality
13. NFPA 70 National Electrical Code
14. ASCE 7 American Society of Civil Engineers, Minimum Design Loads for Buildings and Other Structures
15. International Code Council-Evaluation Services - AC 156 Acceptance Criteria for Seismic Qualification Testing of Non-structural Components
16. International Code Council-Evaluation Services Report - Seismic Engineer Report
    A. Current ICC-ES or other approved evaluation report for submitted ceiling suspension system, where required by authorities having jurisdiction.
17. California Air Resources Board (CARB) compliant
18. LEED - Leadership in Energy and Environmental Design is a set of rating systems for the design, construction, operation, and maintenance of green buildings

1.4 SUBMITTALS

a) Shop Drawings: Layout and details of ceilings. Show locations of items that are to be coordinated with or supported by the ceilings.

b) Installation Instructions: Submit manufacturer's installation instructions as referenced in Part three, Installation.

c) Product Data: Submit manufacturer's technical data for each type of ceiling unit and suspension system required.

d) Samples: Linear wood panel finish samples showing proposed wood species, veneer or wood-look finish, color, grain, texture, sheen, edge condition, and substrate.

e) Certifications: Manufacturer's certifications that products comply with specified requirements, including laboratory reports showing compliance with specified tests and standards.

f) Non-Conformance: All products not conforming to the requirements of this specification and or the manufacturer's published values are to be disposed. The Contractor performing the work will replace with approved product at their expense.

1.5 QUALITY ASSURANCE

a) Single-Source Responsibility: Provide ceiling panel units and grid components by a single manufacturer.

b) Fire Performance Characteristics: Identify ceiling components with appropriate markings of applicable testing and inspecting organization.

    1. Surface Burning Characteristics: As follows, tested per ASTM E-84 and complying with ASTM E 1264 for Class A products.

    2. HPVA (Hardwood Plywood and Veneer Association) certification and audit program per ASTM E-84 tunnel test.

c) Woodworking Standards: Manufacturer must comply with specified provisions of Architectural Woodworking Institute quality standards.

d) Coordination of Work: Coordinate ceiling work with installers of related work including, but not limited to building insulation, gypsum board, light fixtures, mechanical systems, electrical systems, and sprinklers.

1.6 DELIVERY, STORAGE, AND HANDLING

a) Store ceiling components in a dry interior location in their cartons prior to installation to avoid damage. Store cartons in a flat, horizontal position. The protectors between the panels should not be removed until installation.

b) Do not store in unconditioned spaces with humidity greater than 55 percent or lower than 25 percent relative humidity and temperatures lower than 50 degrees F or greater than 86 degrees F. Panels must not be exposed to extreme temperatures, for example, close to a heating source or near a window with direct sunlight.

c) Handle ceiling units carefully to avoid chipped edges or damage to units in any way.

1.7 PROJECT CONDITIONS

a) Wood ceiling materials should be permitted to reach room temperature and have a stabilized moisture content for a minimum of 72 hours before installation. (Remove plastic wrap to allow panels to climatize).

b) The wood panels should not be installed in spaces where the temperature or humidity conditions vary from the temperatures and conditions that will be normal in the occupied space.

c) As interior finish products, the veneered panels are designed for installation in temperature conditions between 50 degrees F and 86 degrees F, in spaces where the building is enclosed, and HVAC systems are functioning and will be in continuous operation. Relative humidity should not fall below 25 percent or exceed 55 percent.

1.8 WARRANTY

a) Veneered Wood Panel: Submit a written warranty executed by the manufacturer, agreeing to repair or replace panels that fail within the warranty period. Failures include, but are not limited to:

    1. Veneered Wood Panels: Defects in materials or factory workmanship.

2. Grid System: Rusting and manufacturing defects.

b) Warranty Period:

1. Veneered Wood panels: One (1) year from date of installation.
2. Grid: Ten years from date of installation.

c) The Warranty shall not deprive the Owner of other rights the Owner may have under other provisions of the Contract Documents and will be in addition to and run concurrent with other warranties made by the Contractor under the requirements of the Contract Documents.

1.9 MAINTENANCE

a) Extra Materials: Deliver extra materials to Owner. Furnish extra materials described below that match products installed. Packaged with protective covering for storage and identified with appropriate labels.

1. Ceiling Units: Furnish quality of full-size units equal to 2.0 percent of amount installed.
2. Exposed Suspension System Components: Furnish quantity of each exposed suspension component equal to 1.0 percent of amount installed.

PART 2 - PRODUCTS

2.1 MANUFACTURERS

a) Basis of Design: Linear wood panel ceiling system matching ceiling type LWP-1 indicated on the Drawings; Armstrong WoodWorks Linear or approved equal.

1. Provide products by manufacturers regularly engaged in fabrication of linear wood panel ceiling systems that meet the requirements of this Section. Basis-of-design product establishes the required aesthetic, dimensions, performance, and installation intent but does not preclude approved equals.

b) Suspension Systems:

1. Provide suspension system by ceiling system manufacturer or an approved compatible suspension manufacturer.

2.2.0 WOOD CEILING UNITS

a) Ceiling Panels Type LWP-1:

1. Surface Texture: Smooth
2. Composition: Linear wood panels with fire-retardant-treated wood, fire-rated composite wood substrate with real wood veneer, or other approved code-compliant linear wood ceiling panel construction providing the specified appearance and performance.
3. Finish: Wood veneer or factory-applied wood-look finish, color, grain, texture, and sheen as selected by Architect from manufacturer's full range; match approved samples.
4. Plank Width:
    1. Linear Wood Panels: 3-3/4 inches wide by 3/4 inch deep, nominal, unless otherwise indicated on Drawings.
5. Panel Width:

1. Overall panel module width and spacing: As required to provide linear wood panel ceiling appearance shown in the ceiling types legend and reflected ceiling plans.

6. Panel Length Size(s):
    1. Panel lengths: Manufacturer's standard lengths coordinated with reflected ceiling plans; provide balanced layout and consistent reveals at joints.

7. Acoustical Performance Infill Options:
    1) Acoustical infill panels or insulation, where indicated or required, by ceiling system manufacturer or approved compatible manufacturer.

8. Flame Spread:
    1. Class A: ASTM E84 surface burning characteristics. Flame Spread Index 25 or less. Smoke Developed Index 50 or less.
    2. CAN/ULC S102 surface burning characteristics. Flame Spread Rating 25 or less. Smoke Developed Classification 50 or less.

b) Accessories: Provide backer clips, Tee Bar Hook, Screws, Safety Cable, Support Hangers and Beam End Retaining Clip per manufacturer's written recommendations and installation instructions.

2.2.1 SUSPENSION SYSTEMS

c) Components: All main beams and cross tees shall be commercial quality hot dipped galvanized steel as per ASTM A653. Main beams and cross tees are double-web steel construction with 15/16-inch type exposed flange design. Exposed surfaces chemically cleansed, capping prefinished galvanized steel in baked polyester paint. Main beams and cross tees shall have rotary stitching.
    1. Structural Classification: ASTM C635 (Heavy Duty)
    2. Color: Black, unless otherwise indicated or approved by Architect.
    3. Main runners, cross tees, clips, carriers, trim, and accessories shall be standard components recommended by the submitted ceiling system manufacturer for the indicated layout, loads, seismic requirements, and installed appearance.
    4. Acceptable suspension system: Heavy-duty exposed grid system compatible with submitted linear wood panel ceiling system; black finish unless otherwise indicated.

d) Attachment Devices: Size for five times design load indicated in ASTM C 635, Table 1, Direct Hung unless otherwise indicated.

e) Wire for Hangers and Ties: ASTM A641, Class 1 zinc coating, soft temper, pre-stretched, with a yield stress load of at least times-three design load, but not less than 12 gauge.

f) Accessories/Edge Moldings and Perimeter Trim:
    a. Angle wall molding and perimeter trim: Manufacturer's standard profiles compatible with submitted ceiling system; finish to match suspension system or adjacent ceiling trim as approved.

PART 3 - EXECUTION

3.1 EXAMINATION

a) Do not proceed with installation until all wet work such as concrete, terrazzo, plastering and painting has been completed and thoroughly dried out.

b) Proper designs for both supply air and return air, maintenance of the HVAC filters and building interior space are essential to minimize soiling. Before starting the HVAC system, make sure supply air is properly filtered and the building interior is free of construction dust.

3.2 PREPARATION

a) Measure each ceiling area and establish layout of acoustical units to balance border widths at opposite edges of each ceiling. Avoid use of less than half width units at borders and comply with reflected ceiling plans. Coordinate panel layout with mechanical and electrical fixtures.

b) Wood ceiling materials shall be permitted to reach room temperature and stabilized moisture content for a minimum of 72 hours before installation, or longer if recommended by manufacturer.

3.3 INSTALLATION

a) Interior products, the veneered wood panels are designed for installation in temperature conditions between 50 degrees F and 86 degrees F, in spaces where the building is enclosed, and HVAC systems are functioning and will be in continuous operation. Relative humidity should not fall below 25 percent or exceed 55 percent.

b) Install suspension system, linear wood panels, clips, carriers, perimeter trim, and accessories in compliance with ASTM C636, ASTM E580 where applicable, requirements of authorities having jurisdiction, approved shop drawings, and manufacturer’s written installation instructions.

3.4 ADJUSTING AND CLEANING

a) Replace damaged and broken panels.

b) Clean exposed surfaces of ceilings panels, including trim, edge moldings, and suspension members. Comply with manufacturer’s instructions for cleaning and touch up of minor finish damage.

END OF SECTION 095126 (NHG)

SECTION 096466 (NHG) – WOOD ATHLETIC FLOORING

PART 1 - GENERAL

1.1 SUMMARY

A. Section Includes:

1. Anchored resilient wood athletic flooring system.
2. Hard maple flooring.
3. Vapor retarder.
4. Athletic floor finish, court markings, and graphics.
5. Ventilating athletic wall base.
6. Transitions, thresholds, blocking, and accessories required for a complete installation.

1.2 RELATED REQUIREMENTS

A. Section 03 30 00 – Cast-in-Place Concrete.

B. Section 08 71 00 – Door Hardware: Thresholds and transition strips.

C. Division 11 Sections: Athletic equipment and floor inserts.

1.3 REFERENCES

A. Maple Flooring Manufacturers Association, MFMA.

B. ASTM F2772 – Athletic Performance Properties of Indoor Sports Floor Systems.

1.4 SUBMITTALS

A. Product Data:

1. Complete athletic flooring system.
2. Maple flooring.
3. Resilient pads and anchorage.
4. Vapor retarder.
5. Finish materials.
6. Wall base and accessories.

B. Shop Drawings:

1. Flooring direction and layout.
2. Expansion provisions.
3. Blocking and reinforcement locations.
4. Floor inserts, thresholds, and transitions.
5. Court markings, colors, and graphics.

6. Coordination with athletic equipment.

C. Samples:

1. Maple flooring.
2. Finish.
3. Court-marking colors.
4. Wall-base colors.

D. Manufacturer's installation instructions.

E. Installer qualifications.

F. Independent testing demonstrating compliance with specified athletic performance requirements.

G. Maintenance data.

H. Warranty documentation.

1.5 QUALITY ASSURANCE

A. Manufacturer shall regularly manufacture complete wood athletic flooring systems of the type specified.

B. Installer shall be approved by the flooring-system manufacturer and experienced in wood athletic flooring installations.

C. Provide the resilient subfloor, maple flooring, fastening system, finish materials, and accessories as a complete coordinated system.

D. Mockup: Provide when indicated or requested by Architect.

1.6 DELIVERY, STORAGE AND FIELD CONDITIONS

A. Deliver and store flooring in a dry, enclosed, and ventilated building.

B. Do not deliver wood flooring until wet work is complete and the building is enclosed and weathertight.

C. Permanent HVAC systems shall be operating before, during, and after installation.

D. Maintain temperature and relative humidity within the flooring manufacturer's recommended range and approximately equal to anticipated occupied conditions.

E. Acclimate maple flooring in accordance with manufacturer's instructions.

F. Do not install over concrete until required moisture testing has been completed and acceptable results have been documented.

1.7 WARRANTY

A. Provide manufacturer's standard written warranty covering defects in materials and system components.

B. B. Provide installer's one-year warranty covering installation defects.

C.

PART 2 - PRODUCTS

2.1 MANUFACTURERS

A. Basis of Design:

1. Connor Sports; Alliance Anchored Resilient Hardwood System.

B. Other Acceptable Manufacturers:

1. Aacer Flooring.
2. Action Floor Systems.
3. Robbins Sports Surfaces.
4. Approved equal.

C. Products by other manufacturers shall provide equivalent construction, profile height, athletic performance, durability, and warranty.

1. Connor, Robbins, Aacer, and Action all currently offer maple athletic flooring systems, including anchored or resilient systems suitable for competitive specification.

2.2 PERFORMANCE REQUIREMENTS

A. Provide a fixed, anchored, resilient wood athletic flooring system tested in accordance with ASTM F2772.

B. System shall be suitable for school gymnasium and multipurpose athletic use.

C. Provide uniform resiliency and ball response throughout the floor, without perceptible dead spots.

D. Finished system profile:

1. Nominal 2-1/4 inches from concrete slab to top of maple flooring.
2. Coordinate exact slab depression, thresholds, adjacent flooring, door clearances, and athletic equipment.

E. System shall accommodate concentrated loads from portable athletic equipment and retractable bleachers where indicated.

2.3 VAPOR RETARDER

A. Polyethylene sheet, minimum 6 mils thick, or manufacturer's standard membrane recommended for the flooring system.

B. Provide manufacturer-recommended seam tape and accessories.

2.4 RESILIENT SUBFLOOR SYSTEM

A. Factory-fabricated or field-assembled anchored resilient subfloor system consisting of:

1. Plywood or engineered-wood sleepers or nailers.
2. Plywood cross members or underlayment components.
3. Resilient pads.
4. Concrete anchors.
5. Fasteners and adhesive.
6. Solid blocking and reinforcing components.

B. Resilient pads shall be permanently secured and spaced to provide uniform system performance.

C. Anchors shall securely engage the concrete slab and be compatible with the resilient action of the flooring system.

D. Provide solid blocking:

1. At doorways and thresholds.
2. Below bleachers in the stacked position.
3. Below portable goals and athletic equipment.
4. At floor inserts.
5. At other concentrated-load locations indicated or recommended by the manufacturer.

2.5 MAPLE FLOORING

A. MFMA-grade-marked Northern Hard Maple.

B. Grade: Second and Better, unless otherwise indicated.

C. Configuration:

1. Tongue-and-groove.
2. End-matched.
3. Nominal 25/32-inch thickness.
4. Nominal 2-1/4-inch face width.

D. Moisture content shall be appropriate for anticipated building conditions at time of installation.

2.6 FASTENERS AND ADHESIVES

A. Provide flooring cleats or staples of the type and spacing recommended by the flooring-system manufacturer.

B. Provide corrosion-resistant subfloor fasteners and concrete anchors.

C. Adhesives shall be compatible with adjacent materials and recommended by the flooring-system manufacturer.

2.7 FINISH MATERIALS

A. Athletic floor sealer and finish:

1. Manufacturer's standard commercial athletic floor system.
2. Compatible with maple flooring and court-marking paint.
3. Comply with applicable VOC requirements.

B. Finish sheen: Gloss, unless otherwise selected by Architect.

C. Court-marking paint shall be compatible with the selected sealer and finish.

2.8 ATHLETIC WALL BASE

A. Ventilating athletic wall base designed to permit floor movement and ventilation.

B. Material: Molded or extruded rubber or vinyl.

C. Size: Manufacturer's standard profile suitable for the required expansion space.

D. Color: As selected by Architect from manufacturer's full standard range.

2.9 THRESHOLDS AND TRANSITIONS

A. Aluminum thresholds and transition strips sized to accommodate the athletic floor system and adjacent flooring.

B. Comply with accessibility requirements.

C. Coordinate with door clearances and adjacent floor elevations.

PART 3 - EXECUTION

3.1 EXAMINATION

A. Examine concrete slab, environmental conditions, openings, inserts, and adjacent construction before beginning work.

B. Verify that concrete is:

1. Clean and dry.
2. Free of curing compounds and substances that could interfere with installation.
3. Within flooring manufacturer's flatness tolerances.
4. At the required elevation.

C. Test concrete moisture using methods required by the flooring manufacturer.

D. Notify Architect in writing of conditions that prevent proper installation.

E. Beginning installation constitutes acceptance of substrate and field conditions.

3.2 PREPARATION

A. Clean concrete substrate.

B. Grind high areas and fill low areas with compatible leveling material.

C. Coordinate floor inserts, sleeves, goals, bleachers, doors, and thresholds before installing flooring.

3.3 VAPOR RETARDER INSTALLATION

A. Install vapor retarder continuously over concrete slab.

B. Lap seams not less than 6 inches and seal in accordance with manufacturer's instructions.

C. Turn membrane up at perimeter where required by the flooring-system manufacturer.

3.4 SUBFLOOR INSTALLATION

A. Install resilient subfloor in accordance with approved Shop Drawings and manufacturer's instructions.

B. Install sleepers or nailers perpendicular to the direction of maple flooring unless otherwise recommended by the manufacturer.

C. Anchor subfloor securely to concrete without restricting required resilient movement.

D. Stagger joints between adjacent rows.

E. Provide nominal 1-1/2-inch expansion space at walls, columns, thresholds, and other vertical obstructions.

F. Install solid blocking and reinforcement at concentrated-load locations.

3.5 MAPLE FLOORING INSTALLATION

A. Install maple flooring parallel to the primary direction of play unless otherwise indicated.

B. Mechanically fasten flooring to the subfloor system.

C. Stagger end joints and fit boards tightly.

D. Provide intermediate expansion spacing where required for local environmental conditions.

E. Maintain required perimeter expansion spaces.

3.6 SANDING AND FINISHING

A. Sand flooring to a smooth, level, and uniform surface.

B. Remove sanding dust before applying finish materials.

C. Apply manufacturer's complete sealing and finishing system.

D. Provide not less than:

1. Two coats of sealer.
2. Two coats of athletic floor finish.

E. Screen or abrade and clean between coats as recommended by the finish manufacturer.

F. Apply court markings and graphics at the stage recommended by the finish manufacturer.

3.7 COURT MARKINGS AND GRAPHICS

A. Provide court markings, colors, dimensions, and graphics as indicated on Drawings.

B. Lay out markings for Architect's review before painting.

C. Provide sharp, straight, and uniform lines.

D. Protect completed markings with the required finish coats.

3.8 BASE AND ACCESSORIES

A. Install ventilating athletic base continuously at perimeter.

B. Do not obstruct required expansion space or ventilation.

C. Install thresholds and transitions securely and flush with adjacent surfaces.

3.9 PROTECTION

A. Restrict access until finish materials have fully cured.

B. Protect completed flooring with a breathable, nonstaining covering where subsequent construction traffic is unavoidable.

C. Do not use polyethylene or other nonbreathable floor protection directly over finished wood flooring.

D. Repair damaged or defective work before Substantial Completion.

3.10 OWNER INSTRUCTION

A. Instruct Owner's personnel regarding:

1. Cleaning and maintenance.
2. Environmental control.
3. Approved floor-protection methods.
4. Restrictions on equipment, tapes, cleaners, and temporary coverings.

END OF SECTION 096466

SECTION 096500 - RESILIENT FLOORING AND ACCESSORIES

PART 1 - GENERAL

1.01 RELATED DOCUMENTS

A. Drawings and general provisions of the Contract, including General and Supplementary Conditions and Division 1 Specification Sections, apply to this Section.

B. Section 096513 RESILIENT BASE AND ACCESSORIES.

1.02 SUMMARY

A. This Section includes the following:

1. Vinyl composition tile flooring at J. F. Tatem Elementary School and where indicated.
2. Resilient athletic sheet flooring at the Hopkins Wrestling Room and where indicated.
3. Examine all drawings. Coordinate the work of this section with all related and adjoining work.

1.03 SUBMITTALS

A. Product Data: For each type of resilient flooring product indicated, submit manufacturer's technical data, installation instructions, maintenance requirements, and performance characteristics.

B. Complete Flooring System Submittal: For each resilient flooring type, provide a complete system submittal identifying every product proposed for each layer and coat of the installation, including but not limited to:
   1. Flooring material, including product name, thickness, wear layer, backing, and finish.
   2. Primers, moisture mitigation products, leveling or patching compounds, and underlayments.
   3. Adhesives, seam treatments, edge details, transition strips, and accessories.
   4. Manufacturer and product designation for each material listed.

C. Manufacturer Certification: Submit written certification from the flooring manufacturer confirming that all products submitted are compatible with one another and approved for use together as a complete flooring system for the intended application.

D. Performance Documentation: Provide documentation demonstrating compliance with performance requirements expressly specified for each flooring product.

E. Shop Drawings: For sports flooring and patterned resilient flooring installations, indicate flooring layout, pattern orientation, seam locations, game lines, transitions, edge conditions, and interfaces with permanent construction.

F. Samples for Initial Selection: For each type of resilient flooring product, submit manufacturer's full range of color and pattern samples.

G. Maintenance Data: Provide manufacturer's written maintenance instructions for each flooring system, including cleaning methods, recommended products, and restrictions.

1.04 QUALITY ASSURANCE

A. Fire-Test-Response Characteristics: Provide products identical to those tested for fire-exposure behavior per test method indicated by a testing and inspecting agency acceptable to authorities having jurisdiction.

1.05 DELIVERY, STORAGE, AND HANDLING

A. Store resilient products and installation materials in dry spaces protected from the weather, with ambient temperatures maintained within range recommended by manufacturers, but not less than 50 deg F (10 deg C) or more than 90 deg F (32 deg C). Store resilient flooring materials in accordance with manufacturer's recommendations for tile or sheet products, as applicable.

1.06 PROJECT CONDITIONS

A. Maintain temperatures within range recommended by manufacturers, but not less than 70 deg F (21 deg C) or more than 95 deg F (35 deg C), in spaces to receive flooring during the following time periods:

1. 72 hours before installation.
2. During installation.
3. 48 hours after installation.

B. After post installation period, maintain temperatures within range recommended by manufacturer, but not less than 55 deg F (13 deg C) or more than 95 deg F (35 deg C).

C. Close spaces to traffic during flooring installation.

D. Close spaces to traffic for 48 hours after flooring installation.

E. Install resilient products after other finishing operations, including painting, have been completed.

1.07 EXTRA MATERIALS

A. Furnish extra materials described below that match products installed and that are packaged with protective covering for storage and identified with labels describing contents.

1. Resilient Flooring: Furnish not less than 2 percent of each type, color, and pattern of flooring. Extra sheet flooring shall be full-width material from the same production run as the installed flooring.

1.08 REFERENCES

A. American Society for Testing and Materials (ASTM):

1. ASTM E648 (NFPA 253), Test Method for Critical Radiant Flux of Floor Covering Systems;

PART 2 - PRODUCTS

2.01 MANUFACTURERS AND PRODUCTS

A. Available Products: Subject to compliance with requirements, products that may be incorporated into the Work include, but are not limited to, the products listed in other Part 2 articles.

2.02 COLORS AND PATTERNS

A. Colors: As selected by Architect from manufacturer's full range. Refer to drawings for more information.

2.03 VINYL COMPOSITION TILE

A. Vinyl Composition Floor Tile: ASTM F1066, Class 2, through-pattern tile, 1/8 inch thick, 12 by 12 inches, unless otherwise indicated.

B. Basis of Design: Armstrong Flooring, Standard Excelon Imperial Texture; or approved equal.

C. Colors and Patterns: As selected by Architect from manufacturer’s full range.

2.04 INSTALLATION MATERIALS

A. Trowelable Leveling and Patching Compounds: Latex-modified, hydraulic-cement-based formulation provided by resilient flooring manufacturer and compatible with selected flooring system, adhesives, and substrate conditions.
   1. For sports flooring, provide Gerflor GerPatch patching compound or manufacturer-approved equivalent with slab moisture tolerance compatible with the adhesive.

B. Adhesives: Water-resistant products recommended in writing by the flooring manufacturer for the flooring, substrate, service conditions, and documented substrate-moisture conditions.
   1. For sports flooring, provide the manufacturer’s standard adhesive system for fully adhered installation and 100 percent adhesive coverage.

2. Adhesive system shall be approved for substrate relative humidity up to the specified maximum, but not less than 95 percent when tested according to ASTM F2170.
3. Dry-Tex high-moisture adhesive systems are not included unless specifically approved by Architect.

C. Metal Edge Strips: Extruded aluminum with mill finish of width shown, of height required to protect exposed edges of tiles, and in maximum available lengths to minimize running joints.

D. Surface Preparation Materials: Manufacturer-approved surface preparation, primers, patching compounds, seam materials, heat-welding rod, and related accessories compatible with the selected resilient flooring systems and substrate conditions. Products shall be recommended by the flooring manufacturer for the intended substrate conditions, including chemically abated surfaces where applicable.

2.05 SPORTS FLOORING

A. Sheet Vinyl Resilient Athletic Flooring System: Dual-durometer foam-backed sheet vinyl sports flooring designed for fully adhered athletic flooring applications.

B. Basis of Design: Gerflor Taraflex Sport M Performance. Subject to compliance with specified requirements, provide basis-of-design product or approved equal.

C. Performance Requirements:
1. Comply with ASTM F2772 Indoor Sport Floor Standard, Performance Level Class 3 for force reduction, ball bounce, vertical deformation, and surface friction.
2. Provide minimum overall thickness of 0.35 inch (9 mm), with wear-layer thickness not less than 0.08 inch (2.1 mm), two-layer dual-durometer closed-cell foam backing, and fiberglass reinforcement for dimensional stability and indentation resistance.
3. Provide factory-applied permanent bacteriostatic and fungicidal treatment throughout the flooring material and factory-applied UV-cured no-wax finish.
4. Comply with ASTM E648, Class I fire performance.
5. Provide heat-welded seams using heat welding rod supplied by the flooring manufacturer, with color selected to blend with flooring color.

D. Adhesive Method: Fully adhere flooring to substrate using standard full-spread adhesive coverage to eliminate gaps below flooring and prevent waves, wrinkles, and movement from rolling loads. Adhesive system shall comply with flooring manufacturer’s requirements for substrate moisture conditions and shall not exceed 95 percent relative humidity when tested according to ASTM F 2170.

E. Color: As selected by Architect from manufacturer’s standard offerings.

F. Finish: Manufacturer's factory-applied, permanent, UV-cured, no-wax finish requiring cleaning and rinsing only. Field-applied finishes are not required and are not allowed unless specifically recommended in writing by manufacturer.

G. Accessories: Provide manufacturer’s recommended standard full-spread adhesive, primer where required, GerPatch or approved patching compound, heat welding rod,

game-line and marker paint system including primer, edge conditions, transitions, and related accessories as part of a complete athletic flooring system.

PART 3 - EXECUTION

3.01 EXAMINATION

A. Examine substrates, with Installer present, for compliance with requirements for installation tolerances, moisture content, and other conditions affecting performance.

1. Verify that finishes of substrates comply with tolerances and other requirements specified in other Sections and that substrates are free of cracks, ridges, depressions, scale, and foreign deposits that might interfere with adhesion of resilient products.
2. Proceed with installation only after unsatisfactory conditions have been corrected.

3.02 PREPARATION

A. Prepare substrates according to manufacturer's written recommendations to ensure adhesion of resilient products.

B. Concrete Substrates: Prepare according to ASTM F 710.

1. Verify that substrates comply with the moisture, alkalinity, cleanliness, and surface-condition requirements of the approved flooring and adhesive manufacturers.
2. Alkalinity and Adhesion Testing: Perform tests recommended by manufacturer. Proceed with installation only after substrates pass testing.
3. Moisture Testing: Test concrete substrates according to ASTM F2170 and other methods required by the flooring and adhesive manufacturers. Proceed with installation only when results comply with the limits of the approved flooring system. Where results exceed those limits, provide an approved moisture-mitigation system

C. Remove substrate coatings and other substances that are incompatible with adhesives and that contain soap, wax, oil, or silicone, using mechanical methods recommended by manufacturer. Do not use solvents.

D. Use trowelable leveling and patching compound to fill cracks, holes, and depressions in substrates.

E. Move resilient products and installation materials into spaces where they will be installed at least 48 hours in advance of installation.

1. Do not install resilient products until they are same temperature as space where they are to be installed.

F. Sweep and vacuum clean substrates to be covered by resilient products immediately before installation. After cleaning, examine substrates for moisture, alkaline salts,

carbonation, and dust. Proceed with installation only after unsatisfactory conditions have been corrected.

3.03 RESILIENT TILE INSTALLATION

A. Lay out tiles from center marks established with principal walls, discounting minor offsets, so tiles at opposite edges of room are of equal width. Adjust as necessary to avoid using cut widths that equal less than one-half tile at perimeter.

   1. Lay tiles in pattern as indicated on drawings.

B. Match tiles for color and pattern by selecting tiles from cartons in the same sequence as manufactured and packaged, if so numbered. Discard broken, cracked, chipped, or deformed tiles.

   1. Lay tiles in pattern of colors and sizes indicated.

C. Scribe, cut, and fit tiles to butt neatly and tightly to vertical surfaces and permanent fixtures including built-in furniture, cabinets, pipes, outlets, edgings, door frames, thresholds, and nosings.

D. Extend tiles into toe spaces, door reveals, closets, and similar openings.

E. Maintain reference markers, holes, and openings that are in place or marked for future cutting by repeating on floor tiles as marked on substrates. Use chalk or other non-permanent, non-staining marking device.

F. Install tiles on covers for telephone and electrical ducts and similar items in finished floor areas. Maintain overall continuity of color and pattern with pieces of tile installed on covers. Tightly adhere tile edges to substrates that abut covers and to cover perimeters.

G. Adhere tiles to flooring substrates using a full spread of adhesive applied to substrate to produce a completed installation without open cracks, voids, raising and puckering at joints, telegraphing of adhesive spreader marks, and other surface imperfections.

3.04 SPORTS FLOORING INSTALLATION

A. Install sports flooring in strict accordance with manufacturer's written instructions and approved submittals.

B. Substrate Preparation:
   1. Concrete substrates shall be smooth, level, clean, dry, and free of sealers, curing compounds, or contaminants.
   2. Moisture testing and remediation shall comply with manufacturer requirements for sports flooring systems.

C. Installation:
   1. Install flooring system using manufacturer-approved adhesives and methods.
   2. Provide tight seams, uniform appearance, and smooth transitions at adjacent flooring materials.

3. Install edge details, terminations, and transitions as recommended by manufacturer.
4. Lay sheet flooring to minimize seams and locate seams away from principal traffic lanes where practicable.
5. Heat weld seams after adhesive has cured for the period recommended by manufacturer.
6. Install game lines and markings in locations and colors indicated on Drawings.

D. Protection:
1. Protect installed sports flooring from damage during construction.
2. Do not permit rolling loads, scissor lifts, or equipment traffic until flooring has fully cured per manufacturer recommendations.

3.05 CLEANING AND PROTECTION

A. Perform the following operations immediately after completing resilient product installation:

1. Remove adhesive and other blemishes from exposed surfaces.
2. Sweep and vacuum surfaces thoroughly.
3. Damp-mop surfaces to remove marks and soil.
   a. Do not wash surfaces until after time period recommended by manufacturer.

B. Protect resilient products from mars, marks, indentations, and other damage from construction operations and placement of equipment and fixtures during remainder of construction period. Use protection methods recommended in writing by manufacturer.

1. Apply protective floor polish to horizontal surfaces only where recommended in writing by the flooring manufacturer for the specific product installed.
   a. Use commercially available products acceptable to manufacturer.
   b. Coordinate selection of floor polish with Owner's maintenance service.

2. Protect flooring using materials and methods recommended in writing by the flooring manufacturer. Do not use protection materials that may discolor, stain, trap moisture, or bond to the flooring surface.
3. Do not move heavy and sharp objects directly over surfaces. Place hardboard or plywood panels over flooring and under objects while they are being moved. Slide or roll objects over panels without moving panels.

END OF SECTION 096500

SECTION 096513 - RESILIENT BASE AND ACCESSORIES

PART 1 - GENERAL

1.1 RELATED DOCUMENTS

A. Drawings and general provisions of the Contract, including General and Supplementary Conditions and Division 01 Specification Sections, apply to this Section.

1.2 SUMMARY

A. Section Includes:

1. Thermoplastic-rubber base.
2. Rubber molding accessories.

1.3 ACTION SUBMITTALS

A. Product Data: For each type of product.

B. Samples for Initial Selection: For each type of product indicated.

1.4 QUALITY ASSURANCE

A. Mockups: Build mockups to verify selections made under Sample submittals, to demonstrate aesthetic effects, and to set quality standards for materials and execution.

1. Coordinate mockups in this Section with mockups specified in other Sections.
2. Approval of mockups does not constitute approval of deviations from the Contract Documents contained in mockups unless Architect specifically approves such deviations in writing.
3. Subject to compliance with requirements, approved mockups may become part of the completed Work if undisturbed at time of Substantial Completion.

1.5 DELIVERY, STORAGE, AND HANDLING

A. Store resilient products and installation materials in dry spaces protected from the weather, with ambient temperatures maintained within range recommended by manufacturer, but not less than 50 deg F or more than 90 deg F.

1.6 FIELD CONDITIONS

A. Maintain ambient temperatures within range recommended by manufacturer, but not less than 70 deg F - or more than 95 deg F -, in spaces to receive resilient products during the following periods:

1. 48 hours before installation.

2. During installation.
3. 48 hours after installation.

B. After installation and until Substantial Completion, maintain ambient temperatures within range recommended by manufacturer, but not less than 55 deg F - or more than - .

C. Install resilient products after other finishing operations, including painting, have been completed.

PART 2 - PRODUCTS

2.1 PERFORMANCE REQUIREMENTS

2.2 THERMOPLASTIC-RUBBER BASE

A. Manufacturers: Subject to compliance with requirements, provide products by one of the following:

1. Armstrong Flooring, Inc.
2. Armstrong World Industries, Inc.
3. Johnsonite; a Tarkett company.
4. Roppe Corporation; Roppe Holding Company.
5. Or Approved Equal.

B. Product Standard: ASTM F 1861, Type TP (rubber, thermoplastic).

1. Group: I (solid, homogeneous) or.
2. Style and Location:
   a. Style B, Cove.

C. Thickness: 0.125 inch.

D. Height: 4 inches.

E. Lengths: Coils in manufacturer's longest standard length to minimize seams.

F. Outside Corners: Job formed or preformed.

G. Inside Corners: Job formed or preformed.

H. Colors: As indicated by manufacturer's designations.

2.3 RUBBER MOLDING ACCESSORY -

A. Manufacturers: Subject to compliance with requirements, provide products by one of the following:

1. Roppe Corporation; Roppe Holding Company.
2. Or Approved Equal.

B. Description: Rubber reducer strip for resilient floor covering.

C. Profile and Dimensions: As indicated.

D. Locations: Provide rubber molding accessories in areas indicated.

E. Colors and Patterns: As indicated by manufacturer's designations.

2.4 INSTALLATION MATERIALS

A. Adhesives: Water-resistant type recommended by resilient-product manufacturer for resilient products and substrate conditions indicated.

1. Verify adhesives have a VOC content of 50 g/L or less.

PART 3 - EXECUTION

3.1 EXAMINATION

A. Examine substrates, with Installer present, for compliance with requirements for maximum moisture content and other conditions affecting performance of the Work.

1. Verify that finishes of substrates comply with tolerances and other requirements specified in other Sections and that substrates are free of cracks, ridges, depressions, scale, and foreign deposits that might interfere with adhesion of resilient products.

B. Proceed with installation only after unsatisfactory conditions have been corrected.

1. Installation of resilient products indicates acceptance of surfaces and conditions.

3.2 PREPARATION

A. Prepare substrates according to manufacturer's written instructions to ensure adhesion of resilient products.

B. Do not install resilient products until materials are the same temperature as space where they are to be installed.

1. At least 48 hours in advance of installation, move resilient products and installation materials into spaces where they will be installed.

C. Immediately before installation, sweep and vacuum clean substrates to be covered by resilient products.

3.3 RESILIENT BASE INSTALLATION

A. Comply with manufacturer's written instructions for installing resilient base.

B. Apply resilient base to walls, columns, pilasters, casework and cabinets in toe spaces, and other permanent fixtures in rooms and areas where base is required.

C. Install resilient base in lengths as long as practical without gaps at seams and with tops of adjacent pieces aligned.

D. Tightly adhere resilient base to substrate throughout length of each piece, with base in continuous contact with horizontal and vertical substrates.

E. Do not stretch resilient base during installation.

F. On masonry surfaces or other similar irregular substrates, fill voids along top edge of resilient base with manufacturer's recommended adhesive filler material.

G. Preformed Corners: Install preformed corners before installing straight pieces.

H. Job-Formed Corners:

1. Outside Corners: Use straight pieces of maximum lengths possible and form with returns not less than 3 inches - in length.
   a. Form without producing discoloration (whitening) at bends.
2. Inside Corners: Use straight pieces of maximum lengths possible and form with returns not less than 3 inches - in length.
   a. Miter or cope corners to minimize open joints.

3.4 RESILIENT ACCESSORY INSTALLATION

A. Comply with manufacturer's written instructions for installing resilient accessories.

B. Resilient Molding Accessories: Butt to adjacent materials and tightly adhere to substrates throughout length of each piece. Install reducer strips at edges of floor covering that would otherwise be exposed.

3.5 CLEANING AND PROTECTION

A. Comply with manufacturer's written instructions for cleaning and protecting resilient products.

B. Perform the following operations immediately after completing resilient-product installation:

1. Remove adhesive and other blemishes from surfaces.
2. Sweep and vacuum horizontal surfaces thoroughly.
3. Damp-mop horizontal surfaces to remove marks and soil.

C. Protect resilient products from mars, marks, indentations, and other damage from construction operations and placement of equipment and fixtures during remainder of construction period.

D. Cover resilient products subject to wear and foot traffic until Substantial Completion.

END OF SECTION 096513

SECTION 096723 – RESINOUS FLOORING

PART 1 - GENERAL

1.1 SUMMARY

A. This Section includes:
   1. High-performance resinous flooring systems.

1.2 SUBMITTALS

A. Product Data: For each type of product indicated.
B. Installer Certificates for Qualification: Signed by manufacturer stating that installers comply with specified requirements.
C. Material Certificates: For each resinous flooring component, from manufacturer.
D. Maintenance Data: For maintenance manuals.
E. Samples: Submit two 6” X 6” samples of each resinous flooring system applied to a rigid backing. Provide sample which is a true representation of proposed field applied finish. Provide sample color and texture for approval from Owner in writing or approved by General Contractor prior to installation.
F. Product Schedule: For resinous flooring.

1.3 QUALITY ASSURANCE

A. Installer Qualifications: Manufacturer's authorized representative who is trained and approved for installation of flooring systems required for this Project.
   1. Engage an installer who is approved in writing by resinous flooring manufacturer as qualified to apply resinous flooring systems indicated.
   2. Installer Letter of Qualification: Installer to provide letter stating that they have been in business for at least 5 years and listing 5 projects in the last 2 years of similar scope. For each project provide: project name, location, date of installation, contact information, size of project, and manufacturer of materials with system information.
B. Source Limitations: Obtain primary resinous flooring materials, including primers, resins, hardening agents, grouting coats, and topcoats, from single source from single manufacturer. Provide secondary materials, including patching and fill material, joint sealant, and repair materials, of type and from source recommended by manufacturer of primary materials.
C. Pre-installation Conference: Conduct conference at Project site before work and mockups begin.
D. Mockups: If requested by Architect, apply mockups to verify selections made under sample submittals and to demonstrate aesthetic effects and set quality standards for materials and execution. Do not cover up mockup area until accepted.
   1. Apply full-thickness mockups on 16 square foot floor area selected by Architect.
   2. Finish surfaces for verification of products, color, texture, and sheen.
   3. Simulate finished lighting conditions for Architect's review of mockups.
   4. Approved mockups may become part of the completed Work if undisturbed at time of Substantial Completion.
   5. Mockup shall demonstrate desired slip resistance for review and approval by Owner’s representative in writing.

1.4 DELIVERY, STORAGE, AND HANDLING

A. Deliver materials in original packages and containers, with seals unbroken, bearing manufacturer's labels indicating brand name and directions for storage and mixing with other components.
   1. Maintain containers in clean condition, free of foreign materials and residue.
   2. Remove rags and waste from storage areas daily.

1.5 PROJECT CONDITIONS

A. Environmental Limitations: Comply with resinous flooring manufacturer's written instructions for substrate temperature, ambient temperature, moisture, ventilation, and other conditions affecting resinous flooring application.
B. Lighting: Provide permanent lighting or, if permanent lighting is not in place, simulate permanent lighting conditions during resinous flooring application.
C. Close spaces to traffic during resinous flooring application and for not less than 24 hours after application unless manufacturer recommends a longer period.

PART 2 - PRODUCTS

2.1 MANUFACTURERS

A. Manufacturers: Subject to compliance with requirements, provide products by:
   1. The Sherwin Williams Company.
      a. Basis of Design Product: Sherwin-Williams Resuflor Deco Flake DB System (Broadcast Decorative Flake Epoxy).
   2. Or Approved equal.

2.2 MATERIALS

A. VOC Content of Resinous Flooring: Provide resinous flooring systems, for use inside the weatherproofing system, that comply with the following limits for VOC content when calculated according to 40 CFR 59, Subpart D (EPA Method 24)].
   1. Resinous Flooring: 100 g/L.

2.3 HIGH-PERFORMANCE RESINOUS FLOORING

A. Resinous Flooring: Abrasion-, impact- and chemical-resistant, high-performance, resin-based, monolithic floor surfacing designed to produce a seamless floor.
B. System Characteristics:
   1. Color and Pattern: As Indicated on the Drawings from manufacturers listed above.
   2. Slip Resistance: Provide slip resistant finish.

PART 3 - EXECUTION

3.1 PREPARATION

A. Inspection: Prior to commencing Work, thoroughly examine all underlying and adjoining work, surfaces and conditions upon which Work is in any way dependent for perfect results. Report all conditions which affect Work. No "waiver of responsibility" for incomplete, inadequate or defective underlaying and adjoining work, surfaces and conditions will be considered, unless notice of such unsatisfactory conditions has been filed and agreed to in writing before Work begins. Commencement of Work constitutes acceptance of surfaces.
B. Surface Preparation: Remove all surface contamination, loose or weakly adherent particles, laitance, grease, oil, curing compounds, paint, dust and debris by blast track method or approved mechanical means (acid etch not allowed). If surface is questionable try a test patch. Create a minimum surface profile for the system specified in accordance with the methods described in ICRI No. 03732 to achieve profile CSP 3-5 as follows:
   1. Thin film, to 10 mils CSP-1 to CSP-3
   2. Thin and medium films, 10 to 40 mils CSP-3 to CSP-5
   3. Self-leveling mortars, to 3/16” CSP-4 to CSP-6
   4. Mortars and laminates, to 1/4” or more CSP-5 to CSP-10

C. Verify that concrete substrates are dry and moisture-vapor emissions are within acceptable levels according to manufacturer's written instructions.
   1. Moisture Testing: Perform tests indicated below.
      a. Calcium Chloride Test: Perform anhydrous calcium chloride test per ASTM F 1869.
      b. In-Situ Probe Test: Perform relative-humidity test using in-situ probes per ASTM F 2170. Proceed with installation only after substrates have a maximum 75 percent relative-humidity-level measurement.

3.2 ENVIRONMENTAL CONDITIONS

A. All applicators and all other personnel in the area of the RF installation shall take all required and necessary safety precautions. All manufacturers' installation instructions shall be implicitly instructions shall be implicitly followed.
B. Repair damaged and deteriorated concrete according to resinous flooring manufacturer's written instructions.
C. Alkalinity and Adhesion Testing: Verify that concrete substrates have pH within acceptable range. Perform tests recommended by manufacturer. Proceed with application only after substrates pass testing.
D. Resinous Materials: Mix components and prepare materials according to resinous flooring manufacturer's written instructions.
E. Use patching and fill material to fill holes and depressions in substrates according to manufacturer's written instructions.
F. Treat control joints and other nonmoving substrate cracks to prevent cracks from reflecting through resinous flooring according to manufacturer's written instructions.

3.3 APPLICATIONS

A. Install resinous floor over properly prepared concrete surface in strict accordance with the manufacturer's directions.
   1. Install the primer and/or base coats over thoroughly cleaned and prepared concrete.
   2. Install topcoat over flooring after excess aggregate has been removed.
   3. Maintain a slab temperature of 60°F to 80°F for 24 hours minimum before applying floor topping, or as instructed by manufacturer.
B. Apply components of resinous flooring system according to manufacturer's written instructions to produce a uniform, monolithic wearing surface of thickness indicated.
   1. Coordinate application of components to provide optimum adhesion of resinous flooring system to substrate, and optimum intercoat adhesion.
   2. Cure resinous flooring components according to manufacturer's written instructions. Prevent contamination during application and curing processes.
   3. At substrate expansion and isolation joints, comply with resinous flooring manufacturer's written instructions.
C. Sealant: Saw cut resinous floor topping at expansion joints in concrete slab. Fill sawcuts with sealant prior to final seal coat application. Follow manufacturer's written recommendations.
D. Apply primer over prepared substrate at manufacturer's recommended spreading rate.
E. Slip Resistant Finish: Provide grit for slip resistance.
F. Apply topcoats in number indicated for flooring system and at spreading rates recommended in writing by manufacturer.

3.4 COMPLETED WORK

A. Cleaning: Upon completion of the Work, clean up and remove from the premises surplus materials, tools, appliances, empty cans, cartons and rubbish resulting from the Work. Clean off all spattering and drippings, and all resulting stains.
B. Protection: Protect Work in accordance with manufacturer's directions from damage and wear during the remainder of the construction period. Use protective methods and materials, including temporary covering, recommended in writing by resinous flooring manufacturer.

C. Contractor shall insure that coating is protected from any traffic until it is fully cured to the satisfaction of the coating manufacturer.

END OF SECTION 096723

SECTION 096813 - TILE CARPETING

PART 1 - GENERAL

1.1 RELATED DOCUMENTS

A. Drawings and general provisions of the Contract, including General and Supplementary Conditions and Division 01 Specification Sections, apply to this Section.

1.2 SUMMARY

A. Section Includes:

1. Modular carpet tile.

B. Related Requirements:

1. Division 09 Section "Resilient Base and Accessories"
2. Division 09 Section "Resilient Tile Flooring" for resilient wall base and accessories installed with carpet tile.

1.3 ACTION SUBMITTALS

A. Product Data: For each type of product.

1. Include manufacturer's written data on physical characteristics, durability, and fade resistance.
2. Include manufacturer's written installation recommendations for each type of substrate.

B. Samples: For each of the following products and for each color and texture required. Label each Sample with manufacturer's name, material description, color, pattern, and designation indicated on Drawings and in schedules.

1. Carpet Tile: Full-size Sample.
2. Exposed Edge, Transition, and Other Accessory Stripping: 12-inch- long Samples.

C. Samples for Initial Selection: For each type of carpet tile.

1. Include Samples of exposed edge, transition, and other accessory stripping involving color or finish selection.

1.4 INFORMATIONAL SUBMITTALS

A. Qualification Data: For Installer.

B. Sample Warranty: For special warranty.

1.5 CLOSEOUT SUBMITTALS

1.6 QUALITY ASSURANCE

A. Installer Qualifications: An experienced installer who is certified by the International Certified Floorcovering Installers Association at the Commercial II certification level.

1.7 DELIVERY, STORAGE, AND HANDLING

A. Comply with the Carpet and Rug Institute's CRI 104.

1.8 FIELD CONDITIONS

A. Comply with the Carpet and Rug Institute's CRI 104 for temperature, humidity, and ventilation limitations.

B. Environmental Limitations: Do not deliver or install carpet tiles until spaces are enclosed and weathertight, wet-work in spaces is complete and dry, and ambient temperature and humidity conditions are maintained at levels planned for building occupants during the remainder of the construction period.

C. Do not install carpet tiles over concrete slabs until slabs have cured and are sufficiently dry to bond with adhesive and concrete slabs have pH range recommended by carpet tile manufacturer.

D. Where demountable partitions or other items are indicated for installation on top of carpet tiles, install carpet tiles before installing these items.

1.9 WARRANTY

A. Special Warranty for Carpet Tiles: Manufacturer agrees to repair or replace components of carpet tile installation that fail in materials or workmanship within specified warranty period.

1. Warranty does not include deterioration or failure of carpet tile due to unusual traffic, failure of substrate, vandalism, or abuse.
2. Failures include, but are not limited to, the following:
   a. More than 10 percent edge raveling, snags, and runs.
   b. Dimensional instability.
   c. Excess static discharge.
   d. Loss of tuft-bind strength.
   e. Loss of face fiber.
   f. Delamination.
3. Warranty Period: 10 years from date of Substantial Completion.

PART 2 - PRODUCTS

2.1 CARPET TILE

A. Manufacturers: Subject to compliance with requirements, provide products by one of the following:

1. Interface, LLC.
2. Mohawk Group (The); Mohawk Carpet, LLC.
3. Shaw Contract Group; a Berkshire Hathaway company.
4. Patcraft.
5. Or Approved Equal.

B. Color: As selected by Architect from manufacturer's full range.

C. Pattern: As Indicated on Drawings.

D. Primary Backing/Backcoating: Manufacturer's standard composite materials.

E. Size: 24 by 24 inches.

F. Applied Treatments:

1. Soil-Resistance Treatment: Manufacturer's standard treatment.

G. Performance Characteristics:

1. Appearance Retention Rating: Heavy traffic, 3.0 minimum according to ASTM D7330.
2. Dry Breaking Strength: Not less than 100 lbf according to ASTM D2646.
3. Dimensional Tolerance: Within 1/32 inch of specified size dimensions, as determined by physical measurement.
4. Dimensional Stability: 0.2 percent or less according to ISO 2551 (Aachen Test).

2.2 INSTALLATION ACCESSORIES

A. Adhesives: Water-resistant, mildew-resistant, nonstaining, pressure-sensitive type to suit products and subfloor conditions indicated, that comply with flammability requirements for installed carpet tile and are recommended by carpet tile manufacturer for releasable installation.

B. Metal Edge/Transition Strips: Extruded aluminum with mill finish of profile and width shown, of height required to protect exposed edge of carpet, and of maximum lengths to minimize running joints.

PART 3 - EXECUTION

3.1 EXAMINATION

A. Examine substrates, areas, and conditions, with Installer present, for compliance with requirements for maximum moisture content, alkalinity range, installation tolerances, and other conditions affecting carpet tile performance.

B. Examine carpet tile for type, color, pattern, and potential defects.

C. Concrete Slabs: Verify that finishes comply with requirements specified in Section 033000 "Cast-in-Place Concrete" and that surfaces are free of cracks, ridges, depressions, scale, and foreign deposits.

D. Proceed with installation only after unsatisfactory conditions have been corrected.

3.2 PREPARATION

A. General: Comply with the Carpet and Rug Institute's CRI 104 and with carpet tile manufacturer's written installation instructions for preparing substrates indicated to receive carpet tile.

B. Use trowelable leveling and patching compounds, according to manufacturer's written instructions, to fill cracks, holes, depressions, and protrusions in substrates. Fill or level cracks, holes and depressions 1/8 inch wide or wider, and protrusions more than 1/32 inch unless more stringent requirements are required by manufacturer's written instructions.

C. Concrete Substrates: Remove coatings, including curing compounds, and other substances that are incompatible with adhesives and that contain soap, wax, oil, or silicone, without using solvents. Use mechanical methods recommended in writing by adhesive and carpet tile manufacturers.

D. Broom and vacuum clean substrates to be covered immediately before installing carpet tile.

3.3 INSTALLATION

A. General: Comply with the Carpet and Rug Institute's CRI 104, Section 10, "Carpet Tile," and with carpet tile manufacturer's written installation instructions.

B. Installation Method: As recommended in writing by carpet tile manufacturer.

C. Maintain dye-lot integrity. Do not mix dye lots in same area.

D. Maintain pile-direction patterns.

E. Cut and fit carpet tile to butt tightly to vertical surfaces, permanent fixtures, and built-in furniture including cabinets, pipes, outlets, edgings, thresholds, and nosings. Bind or seal cut edges as recommended by carpet tile manufacturer.

F. Extend carpet tile into toe spaces, door reveals, closets, open-bottomed obstructions, removable flanges, alcoves, and similar openings.

G. Maintain reference markers, holes, and openings that are in place or marked for future cutting by repeating on carpet tile as marked on subfloor. Use nonpermanent, nonstaining marking device.

H. Install pattern parallel to walls and borders.

3.4 CLEANING AND PROTECTION

A. Perform the following operations immediately after installing carpet tile:

1. Remove excess adhesive and other surface blemishes using cleaner recommended by carpet tile manufacturer.
2. Remove yarns that protrude from carpet tile surface.
3. Vacuum carpet tile using commercial machine with face-beater element.

B. Protect installed carpet tile to comply with the Carpet and Rug Institute's CRI 104, Section 13.7.

C. Protect carpet tile against damage from construction operations and placement of equipment and fixtures during the remainder of construction period. Use protection methods indicated or recommended in writing by carpet tile manufacturer.

END OF SECTION 096813

SECTION 097200 – VINYL WALL COVERINGS

PART 1 - GENERAL

1.1 SUMMARY

A. Section Includes:

1. Vinyl wall covering.

B. Related Sections:

1. Division 09 Section “Gypsum Wallboard”.
2. Division 09 Section “Painting”.

1.2 PREINSTALLATION MEETINGS

A. Preinstallation Conference: Conduct conference at Project site.

1. Include Architect, Owner, Contractor, Manufacturer’s Representative, and all related Subcontractors.

1.3 ACTION SUBMITTALS

A. Product Data: For each type of product.

1. Include data on physical characteristics, durability, fade resistance, and fire-test-response characteristics.

B. Shop Drawings: Show location and extent of each wall-covering type. Indicate pattern placement, seams, termination points, image orientation, cropping, scaling, and alignment with adjacent construction.

1. Custom Graphic Artwork: Owner or Architect will provide the selected artwork or available source image. Contractor shall coordinate with wall-covering manufacturer and prepare all production-ready, high-resolution digital artwork required for full-scale printing.
2. Include scanning, image reconstruction, redrawing, vectorization, resolution enhancement, color correction, scaling, formatting, and other digital preparation required by wall-covering manufacturer to produce the approved custom graphic without visible pixelation or loss of image quality.
3. Contractor shall verify required image resolution, dimensions, file format, color profile, bleed, and production tolerances with wall-covering manufacturer before preparing the artwork.
4. Submit full digital layout and scaled color proof showing image crop, orientation, seams, scaling, and relationship to wall dimensions for Architect and Owner approval before fabrication.
5. Do not alter the composition, proportions, crop, color, or orientation of Owner-provided artwork without written approval.
6. Include all costs for preparation of production-ready artwork, coordination, proofs, revisions, and manufacturer setup in the Contract Sum. Owner’s provision of artwork

does not indicate that the artwork is print-ready and shall not be grounds for additional cost.

C. Samples: For each type of wall covering and for each color, pattern, texture, and finish specified, full width by 36 inches long in size.

1. Wall-Covering Sample: From same production run to be used for the Work.

a. Show complete pattern repeat.
b. Mark top and face of fabric.

2. Wood-Veneer Wall-Covering Sample: From same flitch to be used for the Work, with specified finish applied.

D. Product Schedule: For wall coverings.

1.4 INFORMATIONAL SUBMITTALS

A. Product Test Reports: For each wall covering, for tests performed by a qualified testing agency.

1.5 CLOSEOUT SUBMITTALS

A. Maintenance Data: For wall coverings to include in maintenance manuals.

1.6 MAINTENANCE MATERIAL SUBMITTALS

A. Furnish extra materials, from the same production run, that match products installed and that are packaged with protective covering for storage and identified with labels describing contents.

1. Wall-Covering Materials: For each type, color, texture, and finish, full width by length to equal to 5 percent of amount installed.

1.7 QUALITY ASSURANCE

A. Mockups: Build mockups to verify selections made under Sample submittals and to demonstrate aesthetic effects and to set quality standards for installation.

1. Build mockup of vinyl wall covering on representative substrate as directed by Architect.
2. Approval of mockups does not constitute approval of deviations from the Contract Documents contained in mockups unless Architect specifically approves such deviations in writing.

1.8 FIELD CONDITIONS

A. Environmental Limitations: Do not deliver or install wall coverings until spaces are enclosed and weathertight, wet-work in spaces is complete and dry, work above ceilings is complete, and HVAC system is operating and maintaining ambient temperature and humidity conditions at levels intended for occupants after Project completion during the remainder of the construction period.

1. Wood-Veneer Wall Coverings: Condition spaces for not less than 48 hours before installation.

B. Lighting: Do not install wall covering until lighting that matches conditions intended for occupants after Project completion is provided on the surfaces to receive wall covering.

C. Ventilation: Provide continuous ventilation during installation and for not less than the time recommended by wall-covering manufacturer for full drying or curing.

PART 2 - PRODUCTS

2.1 PERFORMANCE REQUIREMENTS

A. Fire-Test-Response Characteristics: As determined by testing identical wall coverings applied with identical adhesives to substrates in accordance with test method indicated below by a qualified testing agency. Identify products with appropriate markings of applicable testing agency.

1. Surface-Burning Characteristics: Comply with ASTM E84; testing by a qualified testing agency. Identify products with appropriate markings of applicable testing agency.

a. Flame-Spread Index: 25 or less.
b. Smoke-Developed Index: 50 or less.

2. Fire-Growth Contribution: No flashover and heat and smoke release when tested in accordance with NFPA 286.

2.2 VINYL WALL COVERING

A. Manufacturers: Subject to compliance with requirements, provide products by the following:

1. MDC Interior Solutions
2. Approved Equal.

B. Description: Provide vinyl products in rolls from same production run and complying with the following:

1. FS CCC-W-408D and Wallcovering Association's W-101 for Type II, Medium Duty.
2. ASTM F793/F793M for wall coverings.

a. Category: II, Decorative with Medium Serviceability.
b. Duty Rating: Type II, Medium-Duty (54" commercial vinyl).

C. Total Weight: 24 oz., excluding coatings.

D. Width: 54 inches.

E. Textures, and Patterns: Digitally printed custom graphic based on artwork provided by Owner or Architect and prepared by Contractor for full-scale production in accordance with approved Shop Drawings and manufacturer’s requirements.

2.3 ACCESSORIES

A. Adhesive: Mildew-resistant, nonstaining[, strippable] adhesive, for use with specific wall covering and substrate application indicated and as recommended in writing by wall-covering manufacturer.

B. Wall Liner: Nonwoven, synthetic underlayment and adhesive as recommended in writing by wall-covering manufacturer.

C. Seam Tape: As recommended in writing by wall-covering manufacturer.

PART 3 - EXECUTION

3.1 EXAMINATION

A. Examine substrates and conditions, with Installer present, for compliance with requirements for installation surfaces being true in plane and vertical and horizontal alignment, maximum moisture content, and other conditions affecting performance of the Work.

B. Proceed with installation only after unsatisfactory conditions have been corrected.

3.2 PREPARATION

A. Comply with manufacturer's written instructions for surface preparation.

B. Clean substrates of substances that could impair bond of wall covering, including dirt, oil, grease, mold, and mildew.

C. Prepare substrates to achieve a smooth, dry, clean, structurally sound surface free of flaking, unsound coatings, cracks, and defects.

1. Gypsum Board: Apply primer/sealer as recommended in writing by primer/sealer manufacturer and wall-covering manufacturer.

   a. Gypsum board finish level: Provide minimum Level 4 finish per GA-214. Provide Level 5 finish where required by wall-covering manufacturer or where indicated on the Drawings.

2. Painted Surfaces:

   a. Check for pigment bleeding. Apply primer/sealer to areas susceptible to pigment bleeding as recommended in writing by primer/sealer manufacturer.
   b. Sand gloss, semigloss, and eggshell finishes with fine sandpaper.

D. Remove hardware and hardware accessories, electrical plates and covers, light fixture trims, and similar items.

E. Acclimatize wall-covering materials by removing them from packaging in the installation areas not less than 24 hours before installation.

3.3 INSTALLATION OF WALL COVERING

A. Comply with wall-covering manufacturers' written installation instructions applicable to products and applications indicated.

B. Coordinate installation of digital graphic wall covering with layout, alignment, and image orientation shown on the Drawings. Do not alter crop, alignment, or scaling.

C. Cut wall-covering strips in roll number sequence. Change the roll numbers at partition breaks and corners.

D. Install strips in same order as cut from roll.

1. Reverse strips only where recommended in writing by manufacturer.

E. Install wall covering without lifted or curling edges and without visible shrinkage.

F. Match patterns and image alignment precisely per manufacturer’s layout and approved mockup.

G. Install seams vertical and plumb at least 6 inches from outside corners and 3 inches from inside corners unless a change of pattern or color exists at corner. Horizontal seams are not permitted.

H. Trim edges and seams for color uniformity, pattern match, and tight closure. Butt seams without overlaps or gaps between strips.

I. Fully bond wall covering to substrate. Remove air bubbles, wrinkles, blisters, and other defects.

3.4 CLEANING

A. Remove excess adhesive at seams, perimeter edges, and adjacent surfaces.

B. Use cleaning methods recommended in writing by wall-covering manufacturer.

C. Replace strips that cannot be cleaned.

D. Reinstall hardware and hardware accessories, electrical plates and covers, light fixture trims, and similar items.

END OF SECTION 097200

SECTION 098413 (TES) – ACOUSTIC CEILING BAFFLES

PART 1 - GENERAL

1.1 SUMMARY

A. Section includes suspended PET-felt acoustic ceiling baffles and associated mounting systems.

1.2 ACTION SUBMITTALS

A. Product Data: For each type of product.

1. Include material composition, dimensions, finishes, acoustic performance, fire-test characteristics, mounting components, and installation instructions.

B. Shop Drawings: Indicate baffle layout, spacing, elevations, suspension points, mounting details, and coordination with lighting, sprinklers, diffusers, and other ceiling-mounted work.

C. Samples: Manufacturer’s standard finish samples for each color, grain, or texture indicated.

1.3 INFORMATIONAL SUBMITTALS

A. Sample Warranty: For manufacturer's standard warranty.

PART 2 - PRODUCTS

2.1 PERFORMANCE REQUIREMENTS

A. VOC Emissions: Products shall comply with ASTM D5116 or the California Department of Public Health’s “Standard Method for the Testing and Evaluation of Volatile Organic Chemical Emissions from Indoor Sources Using Environmental Chambers.

B. Surface-Burning Characteristics: Acoustic ceiling baffles shall comply with ASTM E84 or UL 723; testing by a qualified testing agency.

1. Flame-Spread Index: 25 or less.
2. Smoke-Developed Index: 450 or less.

C. Acoustic Performance: Test acoustic ceiling baffles in accordance with ASTM C423.

2.2 MANUFACTURERS

A. Basis-of-Design Manufacturer and Product:

1. TURF Design, Inc.; Beam acoustic ceiling baffle.
2. Subject to compliance with requirements, comparable products by other manufacturers may be submitted.

B. Substitutions: In accordance with Division 01 requirements.

2.3 ACOUSTIC CEILING BAFFLES

A. General: Factory-fabricated, sound-absorbing PET-felt ceiling baffles complete with attachment devices, suspension components, accessories, and hardware required for a complete installation.

B. Basis-of-Design Product: TURF Design, Inc.; Beam.

1. Configuration: Standard Beam.
2. Nominal Dimensions:

   a. Width: 3 inches.
   b. Depth: 8 inches.
   c. Length: As indicated on Drawings; 119 inches maximum.

3. Material: Formed acoustic baffle fabricated from 9 mm PET felt.
4. Acoustic Performance: Tested in accordance with ASTM C423.
5. Noise Reduction Coefficient: Not less than required for the spacing and configuration indicated.
6. Fire Performance: Class A when tested in accordance with ASTM E84.
7. VOC Emissions: Comply with ASTM D5116.
8. Finish: Manufacturer's standard felt color, wood grain, or printed texture as selected by Architect from manufacturer's full range.
9. Mounting System: Manufacturer's standard mounting system compatible with supporting construction and conditions indicated.
10. Suspension and Attachment Spacing: In accordance with manufacturer's written requirements, with a minimum of two attachment points per baffle.
11. Warranty: Manufacturer's standard five-year warranty.

C. Mounting Components:

1. Provide attachment devices, suspension cables, clips, channels, fasteners, and accessories required for the mounting condition indicated.
2. Provide mounting components capable of supporting the baffles without visible sagging, twisting, or displacement.
3. Coordinate attachment to structure, ceiling suspension systems, lighting, sprinklers, diffusers, and other ceiling-mounted work.
4. Baffles shall not support lighting, signage, devices, or other construction.

D. Fabrication:

1. Fabricate baffles to final dimensions before delivery.

2. Do not field cut or trim baffles.
3. Provide clean, uniform edges and surfaces free from dents, distortion, staining, or visible defects.
4. Maintain consistent orientation of colors, grains, and printed patterns across the installation.

PART 3 - EXECUTION

3.1 EXAMINATION

A. Verify supporting construction is complete, properly located, and capable of supporting the acoustic ceiling baffle system.

B. Verify field dimensions and baffle layouts prior to installation.

C. Verify that above-ceiling work affecting installation has been completed and coordinated.

D. Do not proceed until unsatisfactory conditions have been corrected.

3.2 PREPARATION

A. Prepare supporting construction in accordance with manufacturer's written instructions

B. Coordinate baffle layout with adjacent construction and architectural features.

C. Verify locations of concealed services prior to installation.

3.3 INSTALLATION

A. Install baffles in accordance with manufacturer's written instructions and approved submittals.

B. Install baffles level, straight, securely supported, and aligned with uniform spacing and consistent elevations.

C. Secure baffles using manufacturer's standard mounting systems appropriate for substrate conditions.

D. Install baffles without exposed fasteners unless otherwise indicated.

E. Orient colors, grains, and printed patterns consistently across adjacent baffles.

F. Do not stretch, distort, or damage baffles during installation.

3.4 FIELD QUALITY CONTROL

A. Inspect installed baffles for alignment, secure attachment, and surface condition.

B. Replace baffles with wrinkles, puckers, stains, damage, or other visible defects.

3.5 CLEANING AND PROTECTION

A. Remove labels, fasteners, and installation debris.

B. Clean baffle surfaces in accordance with manufacturer's recommendations.

C. Protect installed baffles from damage until Substantial Completion.

END OF SECTION 098413 (TES)

SECTION 099000 - INTERIOR PAINTS

PART 1 GENERAL

1.1 SECTION INCLUDES

A. Interior paint and coating commercial systems including surface preparation.

1.2 RELATED SECTIONS

A. Section 04 20 00 - Unit Masonry: Concrete Masonry Units (CMU) and brick.

B. Section 05 50 00 - Metal Fabrications.

C. Section 09 21 16.23 - Gypsum Board Shaft Wall Assemblies.

1.3 REFERENCES

A. Steel Structures Painting Council (SSPC):
1. SSPC-SP 1 - Solvent Cleaning.
2. SSPC-SP 2 - Hand Tool Cleaning.
3. SSPC-SP 3 - Power Tool Cleaning.
4. SSPC-SP5/NACE No. 1, White Metal Blast Cleaning.
5. SSPC-SP6/NACE No. 3, Commercial Blast Cleaning.
6. SSPC-SP7/NACE No. 4, Brush-Off Blast Cleaning.
7. SSPC-SP10/NACE No. 2, Near-White Blast Cleaning.
8. SSPC-SP11, Power Tool Cleaning to Bare Metal.
9. SSPC-SP12/NACE No. 5, Surface Preparation and Cleaning of Metals by Waterjetting Prior to Recoating.
10. SSPC-SP 13 / NACE No. 6 Surface Preparation for Concrete.

B. Material Safety Data Sheets / Environmental Data Sheets: Per manufacturer's MSDS/EDS for specific VOCs (calculated per 40 CFR 59.406). VOCs may vary by base and sheen.

C. California Department of Public Health (CDPH):
1. CDPH v1.1-2010 and V1.2-2017

1.4 SUBMITTALS

A. Submit under provisions of Section 01 30 00 - Administrative Requirements.

B. Product Data: For each paint system indicated, including.
1. Product characteristics.
2. Surface preparation instructions and recommendations.
3. Primer requirements and finish specification.
4. Storage and handling requirements and recommendations.
5. Application methods.
6. Cautions for storage, handling and installation.

C. Verification Samples: For each finished product specified, submit samples that represent the actual product, color, and sheen.

D. Coating Maintenance Manual: Upon conclusion of project, the Contractor or paint manufacturer/supplier shall furnish a coating maintenance manual, such as Sherwin-Williams, "Custodian Project Color and Product Information" report or equal. Manual shall include an Area Summary with finish schedule, Area Detail designating where each product/color/finish was used, product data pages, Material Safety Data Sheets, care and cleaning instructions, touch-up procedures, and color samples of each color and finish used.

E. Only submit complying products based on project requirements . One must also comply with the regulations regarding VOCs (CARB, OTC, SCAQMD, LADCO). To ensure compliance with district regulations and other rules, businesses that perform coating activities should contact the local district in each area where the coating will be used.

1.5 QUALITY ASSURANCE

A. Installer Qualifications: A firm or individual experienced in applying paints and coatings similar in material, design, and extent to those indicated for this Project, whose work has resulted in applications with a record of successful in-service performance.

B. Paint exposed surfaces. If a color of finish, or a surface is not specifically mentioned, Architect will select from standard products, colors, and sheens available.

C. Do not paint prefinished items, concealed surfaces, finished metal surfaces, operating parts, and labels unless indicated.

1.6 DELIVERY, STORAGE, AND HANDLING

A. Delivery: Deliver manufacturer's unopened containers to the work site. Packaging shall bear the manufacturer's name, label, and the following list of information.
1. Product name, and type (description).
2. Application and use instructions.
3. Surface preparation.
4. VOC content.
5. Environmental handling.
6. Batch date.
7. Color number.

B. Storage: Store and dispose of solvent-based materials, and materials used with solvent-based materials, in accordance with requirements of local authorities having jurisdiction.

C. Store materials in an area that is within the acceptable temperature range, per manufacturer's instructions. Protect from freezing.

D. Handling: Maintain a clean, dry storage area, to prevent contamination or damage to the coatings.

1.7 PROJECT CONDITIONS

A. Maintain environmental conditions (temperature, humidity, and ventilation) within limits recommended by manufacturer for optimum results. Do not install products under environmental conditions outside manufacturer's recommended limits.

1.8 EXTRA MATERIALS

A. Furnish extra paint materials from the same production run as the materials applied and, in the quantities, described below. Package with protective covering for storage and identify with labels describing contents. Deliver extra materials to Owner.

B. Furnish Owner with an additional one percent of each material and color, but not less than 1

gal (3.8 l) or 1 case, as appropriate.

PART 2 PRODUCTS

2.1 MANUFACTURERS

A. Acceptable Manufacturer: Sherwin-Williams, which is located at: 101 Prospect Ave.; Cleveland, OH 44115; ASD Toll Free Tel: 800-524-5979; Tel: 216-566-2000; Fax: 440-826-1989; Email: request infospecifications@sherwin.com; Web:www.swspecs.com.

B. Or approved equal.

2.2 APPLICATIONS/SCOPE

A. Interior Paint and Coating Commercial Systems:
1. Masonry: Concrete masonry units.
2. Metal: Structural steel, and similar items.
3. Concrete Substrates, Traffic Surfaces
4. Galvanized-Metal Substrates: exposed ductwork
5. Gypsum Wall Board
6. Wood Trim

2.3 PAINT MATERIALS - GENERAL

A. Paints and Coatings:
1. Unless otherwise indicated, provide factory-mixed coatings. When required, mix coatings to correct consistency in accordance with manufacturer's instructions before application. Do not reduce, thin, or dilute coatings or add materials to coatings unless such procedure is specifically described in manufacturer's product instructions.
2. For opaque finishes, tint each coat including primer coat and intermediate coats, one-half shade lighter than succeeding coat, with final finish coat as base color. Or follow manufactures product instructions for optimal color conformance.

B. Primers: Where the manufacturer offers options on primers for a particular substrate, use a primer categorized as "best" by the manufacturer.

C. Coating Application Accessories: Provide all primers, sealers, cleaning agents, cleaning cloths, sanding materials, and clean-up materials required, per manufacturer's specifications.

D. Color: Refer to Finish Schedule for paint colors, and as selected.

2.4 INTERIOR PAINT AND COATING COMMERCIAL SYSTEMS

A. Masonry CMU: Concrete, Split Face, Scored, Smooth, High Density, Low Density, and Fluted.
1. Epoxy Systems; Waterbased:
a. Eg-Shel/Low Luster Finish:
1) 1st Coat: S-W Loxon Block Surfacer, LX01W200 (50-100 sq ft/gal).
2) 2nd Coat: S-W Pro Industrial Pre-Catalyzed Waterbased Epoxy, K45- Series.
3) 3rd Coat: S-W Pro Industrial Pre-Catalyzed Waterbased Epoxy, K45- Series (4.0 mils. wet, 1.5 mils. dry per coat).

B. Metal: Miscellaneous and Ferrous Metal.
1. Alkyd Systems; Waterbased:
a. Semi-Gloss Finish:
1) 1st Coat: S-W Pro Industrial Pro-Cryl Universal Primer, B66-1310 Series

(5.0 mils. wet, 2.0 mils. dry per coat).

2) 2nd Coat: S-W Pro Industrial Waterbased Alkyd Urethane Enamel Semi-Gloss, B53-1150 Series.

3) 3rd Coat: S-W Pro Industrial Waterbased Alkyd Urethane Enamel Semi-Gloss, B53-1150 Series (4.0-5.0 mils. wet, 1.4 - 1.7 mils. dry per coat).

C. Concrete Substrates, Traffic Surfaces:

1. Pigmented Water-Based Acrylic system:
   a. First Coat: ArmorSeal 8100 Water Based Epoxy Coating
   b. Top coat: ArmorSeal 8100 Water Based Epoxy Coating

D. Galvanized-Metal Substrates:
1. Metal Paint System Acrylic based: Steel Handrails, Guardrails, and Mechanical equipment and ductwork.
   a. Acrylic primer with 2 semi-gloss DTM finish coats
      1) Prime Coat: Pro-Cryl Universal Primer
      2) Intermediate Coat: DTM Acrylic Coating, semi-gloss
      3) Topcoat: DTM Acrylic Coating, semi-gloss

E. Gypsum Board Substrates:

1) Service Areas (Kitchen, Utility Rooms, Stairwells, Storage and Toilet Rooms) : Acrylic primer with 2 finish coats of Pre-Catalyzed WaterBased Epoxy, semi-gloss

   a) Prime Coat: ProMar 200 Primer
   b) Intermediate Coat: Pro-Industrial Pre-Catalyzed Water Based Epxoy, semi-gloss , K-46
   c) Topcoat: Pro-Industrial Pre-Catalyzed Water Based Epxoy, semi-gloss , K-46

2) Typical Gypsum Walls : Classrooms, Offices, Corridors and Multi-Purpose Room walls: Low-Odor/VOC Latex System:

   a) Prime Coat: ProGreen 200 Primer
   b) Intermediate Coat: ProGreen 200 Eggshell
   c) Topcoat: ProGreen 200 Eggshell

3) ACCENT COLORS-Typical Gypsum Walls –-Low-Odor/VOC Latex System:

   a) Prime Coat: ProGreen 200 Primer
   b) Intermediate Coat: Duration, Satin
   c) Topcoat: Duration, Satin

F. Dimension Lumber Substrates, Nontraffic Surfaces: Including exposed trim.

1) Typical Painted Trim: Institutional Low-Odor/VOC Latex System

   a) Prime Coat:Wall & Wood Primer
   b) Intermediate Coat: ProGreen 200 Latex Semi-gloss
   c) Topcoat: ProGreen 200 Latex Semi-gloss

G. Interior Sealed Concrete – Clear Sealer System
1. Includes floor of Mechanical Room 115, and as indicated in Proposed Finish Floor Plans (A9.## series drawings).
2. Prime Coat: Not required unless recommended by manufacturer.
3. Sealer: Clear, water-based or solvent-based concrete sealer suitable for interior use, low-VOC, compatible with existing concrete conditions.

PART 3 EXECUTION

3.1 EXAMINATION

A. Do not begin installation until the substrates have been properly prepared; notify Architect of unsatisfactory conditions before proceeding. If substrate preparation is the responsibility of another installer, notify Architect of unsatisfactory preparation before proceeding.

B. Proceed with work only after conditions have been corrected and approved by all parties, otherwise application of coatings will be considered as an acceptance of surface conditions.

C. Previously Painted Surfaces: Verify that existing painted surfaces do not contain lead based paints, notify Architect immediately if lead based paints are encountered.

3.2 SURFACE PREPARATION

A. General: Surfaces shall be dry and in sound condition. Remove oil, dust, dirt, loose rust, peeling paint, or other contamination to ensure good adhesion.
   1. Prior to attempting to remove mildew, it is recommended to test any cleaner on a small, inconspicuous area prior to use. Bleach and bleaching type cleaners may damage or discolor existing paint films. Bleach alternative cleaning solutions are advised.
   2. Remove mildew before painting by washing with a solution of 1 part liquid household bleach and 3 parts of warm water. Apply solution and scrub the mildewed area. Allow solution to remain on the surface for 10 minutes. Rinse thoroughly with clean water and allow the surface to dry before painting. Wear protective glasses or goggles, waterproof gloves, and protective clothing. Quickly wash off any of the mixture that comes in contact with your skin. Do not add detergents or ammonia to the bleach/water solution.
   3. Remove items including but not limited to thermostats, electrical outlets, switch covers and similar items prior to painting. After completing painting operations in each space or area, reinstall items removed using workers skilled in the trades involved.
   4. No exterior painting should be done immediately after a rain, during foggy weather, when rain is predicted, or when the temperature is below 50 degrees F (10 degrees C), unless products are designed specifically for these conditions. On large expanses of metal siding, the air, surface, and material temperatures must be 50 degrees F (10 degrees F) or higher to use low temperature products.

B. Aluminum: Remove all oil, grease, dirt, oxide, and other foreign material by cleaning per SSPC-SP1, Solvent Cleaning.

C. Block (Cinder and Concrete): Remove all loose mortar and foreign material. Surface must be free of laitance, concrete dust, dirt, form release agents, moisture curing membranes, loose cement, and hardeners. Concrete and mortar must be cured at least 30 days at 75 degrees F (24 degrees C). The pH of the surface should be between 6 and 9 unless the products are designed to be used in high pH environments. On tilt-up and poured-in-place concrete, commercial detergents and abrasive blasting may be necessary to prepare the surface. Fill bug holes, air pockets, and other voids with a cement patching compound.

D. Concrete, SSPC-SP13 or NACE 6: This standard gives requirements for surface preparation of concrete by mechanical, chemical, or thermal methods prior to the application of bonded protective coating or lining systems. The requirements of this standard are applicable to all types of cementitious surfaces including cast-in-place concrete floors and walls, precast slabs, masonry walls, and shotcrete surfaces. An acceptable prepared concrete surface should be free of contaminants, laitance, loosely adhering concrete, and dust, and should

provide a sound, uniform substrate suitable for the application of protective coating or lining systems.

E. Drywall - Exterior: Must be clean and dry. All nail heads must be set and spackled. Joints must be taped and covered with a joint compound. Spackled nail heads and tape joints must be sanded smooth, and all dust removed prior to painting. Exterior surfaces must be spackled with exterior grade compounds.

F. Drywall - Interior: Must be clean and dry. All nail heads must be set and spackled. Joints must be taped and covered with a joint compound. Spackled nail heads and tape joints must be sanded smooth, and all dust removed prior to painting.

G. Galvanized Metal: Clean per SSPC-SP1 using detergent and water or a degreasing cleaner to remove greases and oils. Apply to a test area, priming as required. Allow the coating to dry at least one week before testing. If adhesion is poor, Brush Blast per SSPC-SP16 is necessary to remove these treatments.

H. Steel: Structural, Plate, And Similar Items: Should be cleaned by one or more of the surface preparations described below. These methods are used throughout the world for describing methods for cleaning structural steel. Visual standards are available through the Society of Protective Coatings. A brief description of these standards together with numbers by which they can be specified follow.

1. Solvent Cleaning, SSPC-SP1: Solvent cleaning is a method for removing all visible oil, grease, soil, drawing and cutting compounds, and other soluble contaminants. Solvent cleaning does not remove rust or mill scale. Change rags and cleaning solution frequently so that deposits of oil and grease are not spread over additional areas in the cleaning process. Be sure to allow adequate ventilation.
2. Hand Tool Cleaning, SSPC-SP2: Hand Tool Cleaning removes all loose mill scale, loose rust, and other detrimental foreign matter. It is not intended that adherent mill scale, rust, and paint be removed by this process. Beforehand tool cleaning, remove visible oil, grease, soluble welding residues, and salts by the methods outlined in SSPC-SP1.
3. Power Tool Cleaning, SSPC-SP3: Power Tool Cleaning removes all loose mill scale, loose rust, and other detrimental foreign matter. It is not intended that adherent mill scale, rust, and paint be removed by this process. Before power tool cleaning, remove visible oil, grease, soluble welding residues, and salts by the methods outlined in SSPC-SP1.
4. White Metal Blast Cleaning, SSPC-SP5 or NACE 1: A White Metal Blast Cleaned surface, when viewed without magnification, shall be free of all visible oil, grease, dirt, dust, mill scale, rust, paint, oxides, corrosion products, and other foreign matter. Before blast cleaning, visible deposits of oil or grease shall be removed by any of the methods specified in SSPC-SP1 or other agreed upon methods.
5. Commercial Blast Cleaning, SSPC-SP6 or NACE 3: A Commercial Blast Cleaned surface, when viewed without magnification, shall be free of all visible oil, grease, dirt, dust, mill scale, rust, paint, oxides, corrosion products, and other foreign matter, except for staining. Staining shall be limited to no more than 33 percent of each square inch of surface area and may consist of light shadows, slight streaks, or minor discoloration caused by stains of rust, stains of mill scale, or stains of previously applied paint. Before blast cleaning, visible deposits of oil or grease shall be removed by any of the methods specified in SSPC-SP1 or other agreed upon methods.
6. Brush-Off Blast Cleaning, SSPC-SP7 or NACE 4: A Brush-Off Blast Cleaned surface, when viewed without magnification, shall be free of all visible oil, grease, dirt, dust, loose mill scale, loose rust, and loose paint. Tightly adherent mill scale, rust, and paint may remain on the surface. Before blast cleaning, visible deposits of oil or grease shall be removed by any of the methods specified in SSPC-SP 1 or other agreed upon methods.

7. Power Tool Cleaning to Bare Metal, SSPC-SP11: Metallic surfaces that are prepared according to this specification, when viewed without magnification, shall be free of all visible oil, grease, dirt, dust, mill scale, rust, paint, oxide corrosion products, and other foreign matter. Slight residues of rust and paint may be left in the lower portions of pits if the original surface is pitted. Prior to power tool surface preparation, remove visible deposits of oil or grease by any of the methods specified in SSPC-SP1, Solvent Cleaning, or other agreed upon methods.
8. Near-White Blast Cleaning, SSPC-SP10 or NACE 2: A Near White Blast Cleaned surface, when viewed without magnification, shall be free of all visible oil, grease, dirt, dust, mill scale, rust, paint, oxides, corrosion products, and other foreign matter, except for staining. Staining shall be limited to no more than 5 percent of each square inch of surface area and may consist of light shadows, slight streaks, or minor discoloration caused by stains of rust, stains of mill scale, or stains of previously applied paint. Before blast cleaning, visible deposits of oil or grease shall be removed by any of the methods specified in SSPC-SP1 or other agreed upon methods.
9. High- and Ultra-High Pressure Water Jetting for Steel and Other Hard Materials: SSPC-SP12 or NACE 5: This standard provides requirements for the use of high- and ultra-high pressure water jetting to achieve various degrees of surface cleanliness. This standard is limited in scope to the use of water only without the addition of solid particles in the stream.
10. Water Blasting, SSPC-SP12/NACE No. 5: Removal of oil grease dirt, loose rust, loose mill scale, and loose paint by water at pressures of 2,000 to 2,500 psi at a flow of 4 to 14 gallons per minute.

I. Wood: Must be clean and dry. Prime and paint as soon as possible. Knots and pitch streaks must be scraped, sanded, and spot primed before a full priming coat is applied. Patch all nail holes and imperfections with a wood filler or putty and sand smooth.

3.3 INSTALLATION

A. Apply all coatings and materials with the manufacturer's specifications in mind. Mix and thin coatings according to manufacturer's recommendations.

B. Do not apply it to wet or damp surfaces. Wait at least 30 days before applying to new concrete or masonry. Or follow manufacturer's procedures to apply appropriate coatings prior to 30 days. Test new concrete for moisture content. Wait until wood is fully dry after rain or morning fog or dew.

C. Apply coatings using methods recommended by manufacturer.

D. Uniformly apply coatings without runs, drips, or sags, without brush marks, and with consistent sheen.

E. Apply coatings at spreading rate required to achieve the manufacturers recommended dry film thickness.

F. Regardless of the number of coats specified, apply as many coats as necessary for complete hide, and uniform appearance.

G. Inspection: The coated surface must be inspected and approved by the Architect just prior to the application of each coat.

3.4 PROTECTION

A. Protect finished coatings from damage until completion of project.

B. Touch-up damaged coatings after substantial completion, following manufacturer's

recommendation for touch up or repair of damaged coatings. Repair any defects that will hinder the performance of the coatings.

END OF SECTION 099000

SECTION 099100 – EXTERIOR PAINT

PART 1 - GENERAL

1.1 SUMMARY

A. This Section includes exterior painting and coating systems, including surface preparation, restoration painting of existing exterior wood trim, painting of exterior steel and metal substrates, and painting of exterior exposed masonry substrates including CMU and parge coats.

1.2 RELATED REQUIREMENTS

A. Drawings and general provisions of the Contract, including Division 01 Specification Sections, apply to this Section.

B. Section 040000 – Masonry.

C. Section 050000 – Metals.

D. Section 061000 – Rough Carpentry.

E. Section 079200 – Joint Sealants.

F. Section 099000 – Interior Painting.

1.3 REFERENCES

A. SSPC surface preparation standards applicable to metal substrates.

B. Manufacturer's published product data and application requirements.

1.4 SUBMITTALS

A. Product data for each exterior paint and coating system proposed, including surface preparation requirements, primers, intermediate coats, and finish coats.

B. A complete exterior painting submittal identifying every product proposed for use, organized by substrate and location, and listing the specific manufacturer, product name, product number, and sheen for each coat of each paint system.

C. Written certification from the paint manufacturer confirming that the submitted products constitute complete, compatible coating systems for the intended exterior substrates and exposure conditions, and that primers, intermediate coats, and finish coats are recommended by the manufacturer for use together.

D. Manufacturer's written surface preparation recommendations for each substrate, including requirements for cleaning, curing, priming, and minimum environmental conditions.

E. Color samples and finish samples as selected by Architect.

F. Maintenance data for exterior coatings, including cleaning recommendations and touch-up procedures

1.5 QUALITY ASSURANCE

A. Use painters experienced in exterior institutional and school construction projects.

B. Perform work in accordance with manufacturer's written instructions.

1.6 PROJECT CONDITIONS

Do not apply exterior coatings during precipitation, when surfaces are wet, or when ambient or substrate temperatures are outside manufacturer's recommended limits.

A. Protect adjacent surfaces, landscaping, and finished construction from damage.

1.7 DELIVERY, STORAGE AND HANDLING

A. Deliver materials in manufacturer's original, unopened containers with labels intact.

B. Store materials in accordance with manufacturer's recommendations and protect from weather, moisture, and temperature extremes.

1.8 EXTRA MATERIALS

A. Provide extra exterior paint materials from the same production run as applied, in quantities not less than one gallon of each color and finish used, for Owner's maintenance.

PART 2 - PRODUCTS

2.1 MANUFACTURERS

A. Basis of Design: Sherwin-Williams.
1. Or approved equal.

2.2 PAINT MATERIALS - GENERAL

A. Provide factory-mixed exterior coatings suitable for exposure to weather, UV, and temperature fluctuations.

B. Provide primers recommended by manufacturer for each substrate and exposure condition

2.3 EXTERIOR PAINT SYSTEMS

A. Existing Exterior Wood Trim – Restoration Painting

1. Surface preparation shall include scraping and removal of loose or failing paint, sanding to smooth surfaces, feathering edges, patching minor defects, and spot priming bare wood.
2. Apply exterior alkyd or acrylic wood primer suitable for weathered substrates, followed by one intermediate coat and one finish coat of exterior acrylic latex, satin or semi-gloss.

B. Exterior Steel – Shop-Primed

C. Surface preparation shall include cleaning per SSPC-SP1 and removal of damaged or rusted primer.
1. Spot prime exposed bare steel with compatible primer.
2. Apply one intermediate coat and one finish coat of DTM acrylic or alkyd coating, semi-gloss.

D. Exterior Steel – Field-Applied (Unprimed)
1. Surface preparation shall comply with SSPC-SP2 or SSPC-SP3 minimum, and SSPC-SP6 where corrosion is present.
2. Apply rust-inhibitive primer followed by one intermediate coat and one finish coat of DTM acrylic coating, semi-gloss.

E. Exterior Pre-Galvanized Steel
1. Surface preparation shall include cleaning per SSPC-SP1 to remove oils and passivation residues, with brush blasting per SSPC-SP16 where required for adhesion.
2. Apply acrylic galvanized metal primer followed by one intermediate coat and one finish coat of DTM acrylic coating, semi-gloss.

F. Exterior Exposed CMU
1. Surface preparation shall include removal of dirt, efflorescence, laitance, loose mortar, and other contaminants.
2. Allow new masonry to cure a minimum of 28 days unless manufacturer permits earlier application.
3. Apply masonry conditioner or block filler as required to achieve uniform surface porosity.
4. Apply one intermediate coat and one finish coat of exterior breathable acrylic masonry coating.

G. Exterior Cement Parge Coats
1. Allow parge coats to fully cure in accordance with manufacturer's recommendations prior to painting.
2. Surface preparation shall include removal of loose material and repair of cracks or defects.
3. Apply masonry primer compatible with cementitious substrates followed by two coats of exterior acrylic masonry coating suitable for parged surfaces.

PART 3 - EXECUTION

3.1 EXAMINATION

A. Verify substrates are properly prepared and suitable for painting.

B. Do not proceed until unsatisfactory conditions have been corrected.

C. Surface preparation shall comply with SSPC standards and manufacturer's written recommendations for each substrate.

3.2 APPLICATION

A. Apply coatings in strict accordance with manufacturer's instructions for exterior exposure.

B. Apply additional coats as required to achieve full coverage, uniform color, and consistent sheen.

3.3 COORDINATION

A. Exterior steel and metal furnished under other Sections, whether shop-primed or pre-galvanized, shall receive field painting under this Section unless specifically noted as prefinished and not intended to receive paint.

3.4 PROTECTION

A. Protect finished surfaces from damage until Substantial Completion.

B. Touch up damaged coatings in accordance with manufacturer's recommendations.

END OF SECTION 099100

SECTION 101100 - VISUAL DISPLAY BOARDS

PART 1 - GENERAL

1.01 RELATED DOCUMENTS

A. Drawings and general provisions of the Contract, including General and Supplementary Conditions and Division 01 Specification Sections, apply to this Section.

1.02 SUMMARY

A. This Section includes the following:
   1. White markerboards.
   2. Vinyl-fabric-faced cork tackboards.

1.03 SUBMITTALS

A. Product Data: Submit manufacturer’s technical data and installation instructions for each material and component part, including data substantiating materials that comply with requirements.

B. Shop Drawings: For each type of visual display board required.

   1. Include dimensioned elevations. Show location of joints between individual panels where unit dimensions exceed maximum panel length.
   2. Include sections of typical trim members.
   3. Show anchors, grounds, reinforcement, accessories, layout, and installation details.

C. Samples for Initial Selection: Manufacturer's color charts showing the full range of colors and textures available for the following:

   1. Markerboards: Actual sections of porcelain enamel finish for markerboard required.

D. Samples for Verification: Of the following products, showing color and texture or finish selected. Where finishes involve normal color and texture variations, include Sample sets showing the full range of variations expected. Prepare Samples from the same material to be used for the Work.

   1. Visual Display Boards: Sample panels not less than 8-1/2 by 11 inches (215 by 280 mm), mounted on the substrate indicated for the final Work. Include a panel for each type, color, and texture required.
   2. Aluminum Trim and Accessories: Samples of each finish type and color, on 6-inch- (150-mm-) long sections of extrusions and not less than 4-inch (100-mm) squares of sheet or plate. Include Sample sets showing the full range of color variations expected.

1.04 QUALITY ASSURANCE

A. Source Limitations: Obtain visual display boards through one source from a single manufacturer.

B. Product Options: Drawings indicate size, profiles, and dimensional requirements of visual display boards and are based on the products indicated. Other manufacturers' products with equal performance characteristics may be considered. Refer to Division 01 Section "Substitutions."

1. Do not modify intended aesthetic effects, as judged solely by Architect, except with Architect's approval and only to the extent needed to comply with performance requirements. Where modifications are proposed, submit comprehensive explanatory data to Architect for review.

C. Fire-Test-Response Characteristics: Provide vinyl-fabric-faced tackboards with a Class A rating when tested per ASTM E84.

1.05 PROJECT CONDITIONS

A. Field Measurements: Verify field measurements before preparation of Shop Drawings and before fabrication to ensure proper fitting. Coordinate fabrication schedule with construction progress to avoid delaying the Work.

1. Allow for trimming and fitting where taking field measurements before fabrication might delay the Work.
2. Established Dimensions: Where field measurements cannot be made without delaying the Work, establish dimensions and proceed with fabricating markerboards without field measurements. Coordinate wall construction to ensure actual dimensions correspond to established dimensions.

1.06 WARRANTY

A. General Warranty: The special porcelain enamel markerboard warranty specified in this Article shall not deprive the Owner of other rights the Owner may have under other provisions of the Contract Documents and shall be in addition to, and run concurrent with, other warranties made by the Contractor under requirements of the Contract Documents.

B. Porcelain Enamel Warranty: Submit a written warranty executed by manufacturer agreeing to replace porcelain enamel markerboards that do not retain their original writing and erasing qualities, become slick and shiny, or exhibit crazing, cracking, or flaking within the specified warranty period, provided the manufacturer's written instructions for handling, installation, protection, and maintenance have been followed.

1. Warranty Period: 50 years from date of Substantial Completion.

PART 2 - PRODUCTS

2.01 MANUFACTURERS

A. Available Manufacturers: Subject to compliance with requirements, manufacturers offering products that may be incorporated into the Work include, but are not limited to, the following:

1. Porcelain Enamel Whiteboards:
   a. Claridge Products and Equipment, Inc.
   b. Best-Rite Markerboard Co.
   c. Carolina Markerboard Co.
   d. Ghent Manufacturing, Inc.
   e. Greensteel, Inc.
   f. Lemco, Inc.
   g. Marsh Markerboard Company.
   h. Nelson Adams Company.
   i. Or approved equal

2. Tackboards:

   a. Best-Rite Markerboard Co.
   b. Carolina Markerboard Co.
   c. Claridge Products and Equipment, Inc.
   d. Ghent Manufacturing, Inc.
   e. Greensteel, Inc.
   f. Lemco, Inc.
   g. Marsh Markerboard Company.
   h. Nelson Adams Company.
   i. Or approved equal

2.02 MATERIALS

A. Porcelain Enamel Markerboards: Provide fused porcelain enamel steel markerboard surface, factory-laminated to a balanced core assembly.
   1. Surface: 24-gauge (0.024") enameling-grade steel with 3-coat porcelain enamel system, matte finish, white, suitable for dry-erase use.
   2. Core: 3/8" MDF or particleboard, balanced with aluminum sheet backing.
   3. Performance: Scratch, chemical, and stain resistant; compatible with standard dry-erase markers.

B. Tackboards: Vinyl-fabric-faced, washable tackable surface factory laminated to 1/4" cork and 1/4" hardboard backing.
   1. Vinyl Fabric: Type II, 13 oz minimum, color as selected.
   2. Surface Burning: ASTM E84, Class A.

2.03 ACCESSORIES

A. Metal Trim and Accessories: Fabricate frames and trim of not less than 0.062-inch-(1.57-mm-) thick, extruded-aluminum alloy, size and shape as indicated, to suit type of installation. Provide straight, single-length units. Keep joints to a minimum. Miter corners to a neat, hairline closure.

   1. Where size of visual display boards or other conditions require support in addition to normal trim, provide structural supports or modify trim as indicated or

as selected by Architect from manufacturer's standard structural support accessories to suit conditions indicated.

2. Field-Applied Trim: Manufacturer's standard snap-on trim with no visible screws or exposed joints.
3. Field-Applied Trim: Manufacturer's standard slip-on trim.
4. Field-Applied Trim: Manufacturer's standard screw-on trim with Phillips flat-head screws.
5. Marker Tray: Manufacturer's standard, continuous, Red Oak tray to match existing.
6. Map Rail: Provide continuous aluminum map rail with 1" cork insert and the following accessories:
   a. End stops at each end.
   b. Two map hooks per 4'-0" of rail.
   c. One flag holder per classroom or as indicated.

2.04 FABRICATION

A. Porcelain Enamel Markerboards: Laminate facing sheet and backing sheet to core material under pressure with manufacturer's recommended flexible, waterproof adhesive.

1. Cut joints straight and true. Space joints symmetrically. Fit and match panels before shipment to provide a continuous, uniform writing surface.
2. Length: Furnish panels approximately equal in length with permissible variation not more than 3 inches (75 mm) in either direction of equal spacing. Allow 1/4-inch (6.4-mm) clearance at trim in length and width for fitting. Provide lengths of panels in each space as follows:

   a. Up to 5 feet (1.524 m), 1 panel.
   b. More than 5 feet (1.524 m) but less than 9 feet (2.743 m), 2 panels.
   c. More than 9 feet (2.743 m) but less than 13.5 feet (4.115 m), 3 panels.
   d. More than 13.5 feet (4.115 m) but less than 18 feet (5.486 m), 4 panels.

B. Assembly: Provide factory-assembled markerboard and tackboard units, unless field-assembled units are required.

1. Make joints only where total length exceeds maximum manufactured length. Fabricate with minimum number of joints, balanced around center of board, as acceptable to Architect.
2. Provide manufacturer's standard vertical joint system between abutting sections of markerboards.
3. Provide manufacturer's standard mullion trim at joints between markerboards and tackboards.

2.05 FINISHES

A. General: Comply with NAAMM's "Metal Finishes Manual for Architectural and Metal Products" for recommendations relative to applying and designating finishes.

B. Finish designations prefixed by AA conform to the system established by the Aluminum Association for designating aluminum finishes.

C. Class II, Clear Anodic Finish: AA-M12C22A31 (Mechanical Finish: nonspecular as fabricated; Chemical Finish: etched, medium matte; Anodic Coating: Architectural Class II, clear coating 0.010 mm or thicker) complying with AAMA 607.1.

D. Baked-Enamel Finish: AA-C12C42R1x (Chemical Finish: cleaned with inhibited chemicals; Chemical Finish: acid chromate-fluoride-phosphate conversion coating; Organic Coating: as specified below). Apply baked enamel complying with paint manufacturer's specifications for cleaning, conversion coating, and painting.

1. Organic Coating: Thermosetting modified-acrylic enamel primer/topcoat system complying with AAMA 603.8 except with a minimum dry film thickness of 1.5 mils (0.04 mm), medium gloss.
2. Color: As selected by Owner from manufacturer's full range of colors.

EXECUTION

2.06 EXAMINATION

A. Examine wall surfaces, with Installer present, for compliance with requirements and other conditions affecting installation of visual display boards.

1. Surfaces to receive markerboards shall be free of dirt, scaling paint, and projections or depressions that would affect smooth, finished surfaces of markerboards.
2. Surfaces to receive tackboards shall be dry and free of substances that would impair the bond between tackboards and substrate.
3. Do not proceed with installation until unsatisfactory conditions have been corrected.

2.07 INSTALLATION

A. Deliver markerboards and tackboards in the largest practical factory-assembled units. Where overall length exceeds maximum panel size, provide factory pre-fitted multi-panel assemblies.

B. Install units in locations and at mounting heights indicated and according to manufacturer's written instructions. Keep perimeter lines straight, plumb, and level. Provide grounds, clips, backing materials, adhesives, brackets, anchors, trim, and accessories necessary for complete installation.
1. Where markerboards are designated as accessible, mount the writing surface so the leading edge is not more than 34 inches above finished floor.

C. Coordinate Project-site-assembled units with grounds, trim, and accessories. Join parts with a neat, precision fit.

2.08 ADJUSTING AND CLEANING

A. Verify that accessories required for each unit have been properly installed and that operating units function properly.

B. Clean units according to manufacturer's written instructions.

END OF SECTION 101100

SECTION 101416 - DEDICATION PLAQUE

PART 1 – GENERAL

1.1 SECTION INCLUDES

A. Etched Plaques

1.2 RELATED SECTIONS

A. Division 10 – Signage (General)
B. Division 10 – Interior Signage
C. Division 10 - Dimensional Aluminum Letters

1.3 SUBMITTALS

A. Comply with Section 013300 - Submittal Procedures.
B. Product Data: Submit manufacturer's product data, including installation instructions.
C. Shop Drawing: Showing the proposed plaque dimensions, configuration and materials.
D. Warranty: Submit manufacturer’s standard lifetime warranty against defects in craftsmanship and materials.

1.4 QUALITY ASSURANCE

A. Manufacturer Qualifications: Company specializing in manufacturing products specified in this section with minimum five years documented experience.
B. Installer Qualifications: Minimum two years documented experience in work of this Section.

1.5 DELIVERY, STORAGE AND HANDLING

A. Comply with manufacturer's recommendations for delivery, storage and handling.
B. Deliver materials to site in manufacturer’s original, unopened packaging, with labels clearly identifying product name, manufacturer, and location of installation. Upon delivery, materials shall be inspected for damage. Deficient materials shall not be used.
C. Storage: Store materials in a clean, dry area indoors in accordance with manufacturer’s instructions. Keep temporary protective coverings in place.
D. Handling: Protect materials and finish from damage during handling and installation.

PART 2 – PRODUCTS

2.1 MANUFACTURER

A. Matthews International Corporation Architectural products
B. Or approved equal.

2.2 ETCHED PLAQUES

A. Material and Thickness: Stainless Steel Alloy 304 3⁄16˝ or as selected from MFG. full range of materials.
B. Size: 20” wide x 30” tall x 3/16” deep

C. Edge Options: Square Edge
D. Corner Options: Square Corners
E. Finishes:

    1. Recessed Areas: Painted Dark Grey or as selected from MFG. full range of colors
    2. Raised Areas:
    3. Stainless Steel Brushed Satin (horizontal grain)
    4. Edges: Satin

F. Clear Coating: No Clear Coat
G. Graphics

    1. Lettering Recessed / Incised Standard Etching .020".
    2. Wording and layout by Architect.

H. Mounting Methods: Studs (Drill and Tap back)
I. Typestyle: Normal
J. Letter style: Use submitted artwork
K. Letter size: Exactly as noted on artwork
L. Layout and Copy: as per artwork provided

PART 3 – EXECUTION

3.1 EXAMINATION

A. Site Verification of Conditions: Verify installation conditions previously established under other sections are acceptable for product installation in accordance with manufacturer's instructions.
B. If substrate preparation is the responsibility of another installer, notify Architect of unsatisfactory preparation before proceeding.

3.2 INSTALLATION

A. Clean surfaces thoroughly prior to installation.
B. Install plaque in accordance with manufacturer's instructions using mounting methods specified.
C. Install plaque level, plumb, at heights and locations indicated.
D. Install product at heights to conform to Americans with Disabilities Act Accessibility Guidelines (ADAAG) and applicable local amendments and regulations.

3.3 CLEANING, PROTECTION & REPAIR

A. Repair scratches and other damage which might have occurred during installation.
B. Clean the installed product in accordance with manufacturer's instructions.
C. Remove construction debris from project site in accordance with provisions outlined in Division 1.

END OF SECTION 101416

SECTION 101419 - DIMENSIONAL LETTER SIGNAGE

PART 1 - GENERAL

1.1 SUMMARY

A. Section Includes:

1. Dimensional characters.
   a. Cast dimensional characters.
   b. Cutout dimensional characters.
   c. Custom exterior and interior dimensional signage

1.2 ACTION SUBMITTALS

A. Product Data: For each type of product.

B. Shop Drawings: For signs.

1. Include fabrication and installation details and attachments to other work.
2. Show sign mounting heights, locations of supplementary supports to be provided by other installers, and accessories.
3. Show message list, typestyles, graphic elements, and layout for each sign at least half size.
4. Show locations of electrical service connections.
5. Include diagrams for power, signal, and control wiring.

C. Samples for Initial Selection: For each type of sign assembly, exposed component, and exposed finish.

1. Include representative Samples of available typestyles and graphic symbols.

1.3 INFORMATIONAL SUBMITTALS

A. Sample Warranty: For special warranty.

1.4 CLOSEOUT SUBMITTALS

1.5 QUALITY ASSURANCE

1.6 FIELD CONDITIONS

A. Field Measurements: Verify locations of electrical service embedded in permanent construction by other installers by field measurements before fabrication, and indicate measurements on Shop Drawings, including concealed structural backup if required for exterior letters..

1.7 WARRANTY

A. Special Warranty: Manufacturer agrees to repair or replace components of signs that fail in materials or workmanship within specified warranty period.

1. Failures include, but are not limited to, the following:
   a. Deterioration of finishes beyond normal weathering.
   b. Separation or delamination of sheet materials and components.
2. Warranty Period: Five years from date of Substantial Completion.

PART 2 - PRODUCTS

2.1 PERFORMANCE REQUIREMENTS

A. Dimensional letters shall withstand exterior environmental exposure, wind loads, and thermal movement without warping, oil-canning, or loosening of attachments.

2.2 DIMENSIONAL CHARACTERS AND LOGOS

A. Cast Characters and logos : Characters with uniform faces, sharp corners, and precisely formed lines and profiles, and as follows:

1. Manufacturers: Subject to compliance with requirements, provide products by one of the following:
   a. Sign Letter Source (Montana Lettering Inc.)
   b. ACE Sign Systems, Inc.
   c. ASI Sign Systems, Inc.
   d. Gemini Signage; Gemini, Inc.
   e. Or Approved Equal.

2. Character Material: Aluminum - .

3. Character Height: As indicated on Drawings .

4. Thickness: Manufacturer's standard for size of character or logo (typically 1/2–1 inch thick unless otherwise shown).

5. Finishes:
   a. Baked-Enamel or Powder-Coat Finish: Manufacturer's standard, in color as selected by Architect from manufacturer's full range .
   b. Overcoat: Manufacturer's standard baked-on clear coating .
6. Frosted polycarbonate (light-diffusing) back panels for halo-lit letters where indicated.

2.3 DIMENSIONAL CHARACTER MATERIALS

A. Aluminum Castings: ASTM B26/B26M, alloy and temper recommended by sign manufacturer for casting process used and for type of use and finish indicated.

B. Aluminum Sheet and Plate: ASTM B209, alloy and temper recommended by aluminum producer and finisher for type of use and finish indicated.

C. Stainless steel sheet and plate: 16, 18, 22, and 24 ga., alloys 304 or 316.

D. Aluminum Extrusions: ASTM B221, alloy and temper recommended by aluminum producer and finisher for type of use and finish indicated.

E. Zinc Castings: ASTM B240, alloy and temper recommended by sign manufacturer for type of use and finish indicated.

F. Zinc Sheet: ASTM B69, ASTM B69, alloy and temper recommended by sign manufacturer for type of use and finish indicated.

H. Paints and Coatings for Sheet Materials: Inks, dyes, and paints that are recommended by manufacturer for optimum adherence to surface and are UV and water resistant for colors and exposure indicated.

2.4 ACCESSORIES

A. Fasteners and Anchors: Manufacturer's standard as required for secure anchorage of signs, noncorrosive and compatible with each material joined, and complying with the following:

1. Use concealed fasteners and anchors unless indicated to be exposed.
2. For exterior exposure, furnish nonferrous-metal stainless steel or hot-dip galvanized devices unless otherwise indicated.
3. Exposed Metal-Fastener Components, General:
   a. Fabricated from same basic metal and finish of fastened metal unless otherwise indicated.
   b. Fastener Heads: tamper-resistant Allen-head, spanner-head, or one-way-head screws.
4. Sign Mounting Fasteners Manufactures standard as recommend for substrate:
   a. Concealed Studs: Concealed (blind), threaded studs welded or brazed to back of sign material, screwed into back of sign assembly, or screwed into tapped lugs cast integrally into back of cast sign material, unless otherwise indicated.
   b. Projecting Studs: Threaded studs with sleeve spacer, welded or brazed to back of sign material, screwed into back of sign assembly, or screwed into tapped lugs cast integrally into back of cast sign material, unless otherwise indicated.
   c. Through Fasteners: Exposed metal fasteners matching sign finish, with type of head indicated, installed in predrilled holes.

B. LED Requirements: Provide items in this Article only where illuminated dimensional letters are indicated on Drawings.
1. LED equipped or "LED ready" supplied LED modules". Letters only
2. Linear, 3 pcs 2835 SMD LED
3. 1.77" x 0.43" x 0.378" (45mm x 11mm x 9.6mm)
   a. 160° beam angle
   b. 12Vdc, 0.48W, single chip 9V/30mA beads
4. Bright White 6000K
5. Power pack(s)s are supplied to power the LED modules. They are hardwired units capable of receiving 277v to step down to 12vdc in wet conditions

2.5 FABRICATION

A. General: Provide manufacturer's standard sign assemblies according to requirements indicated.

1. Preassemble signs and assemblies in the shop to greatest extent possible. Disassemble signs and assemblies only as necessary for shipping and handling limitations. Clearly mark units for reassembly and installation; apply markings in locations concealed from view after final assembly.
2. Mill joints to a tight, hairline fit. Form assemblies and joints exposed to weather to resist water penetration and retention.
3. Comply with AWS for recommended practices in welding and brazing. Provide welds and brazes behind finished surfaces without distorting or discoloring exposed side. Clean exposed welded and brazed connections of flux, and dress exposed and contact surfaces.
4. Conceal connections if possible; otherwise, locate connections where they are inconspicuous.
5. Internally brace dimensional characters for stability, to meet structural performance loading without oil-canning or other surface deformation, and for securing fasteners.
6. Provide rabbets, lugs, and tabs as necessary to assemble components and to attach to existing work. Drill and tap for required fasteners. Use concealed fasteners where possible; use exposed fasteners that match sign finish.
7. Castings: Fabricate castings free of warp, cracks, blowholes, pits, scale, sand holes, and other defects that impair appearance or strength. Grind, wire brush, sandblast, and buff castings to remove seams, gate marks, casting flash, and other casting marks before finishing.

2.6 GENERAL FINISH REQUIREMENTS

A. Protect mechanical finishes on exposed surfaces from damage by applying a strippable, temporary protective covering before shipping.

B. Appearance of Finished Work: Noticeable variations in same piece are not acceptable. Variations in appearance of adjoining components are acceptable if they are within the range of approved Samples and are assembled or installed to minimize contrast.

C. Directional Finishes: Run grain with long dimension of each piece and perpendicular to long dimension of finished trim or border surface unless otherwise indicated.

D. Organic, Anodic, and Chemically Produced Finishes: Apply to formed metal after fabrication but before applying contrasting polished finishes on raised features unless otherwise indicated.

2.7 ALUMINUM FINISHES

A. Clear Anodic Finish: AAMA 611, Class I, 0.018 mm or thicker.

B. Color Anodic Finish: AAMA 611, Class I, 0.018 mm or thicker.

C. Baked-Enamel or Powder-Coat Finish: AAMA 2603 except with a minimum dry film thickness of 1.5 mils. Comply with coating manufacturer's written instructions for cleaning, conversion coating, and applying and baking finish.

PART 3 - EXECUTION

3.1 EXAMINATION

A. Examine substrates, areas, and conditions, with Installer present, for compliance with requirements for installation tolerances and other conditions affecting performance.

B. Verify that sign-support surfaces are within tolerances to accommodate signs without gaps or irregularities between backs of signs and support surfaces unless otherwise indicated.

C. Verify that electrical service is correctly sized and located to accommodate signs.

D. Proceed with installation only after unsatisfactory conditions have been corrected.

3.2 INSTALLATION OF DIMENSIONAL CHARACTERS

A. General: Install signs using mounting methods indicated and according to manufacturer's written instructions.

1. Install signs level, plumb, true to line, and at locations and heights indicated, with sign surfaces free of distortion and other defects in appearance.
2. Before installation, verify that sign surfaces are clean and free of materials or debris that would impair installation.
3. Corrosion Protection: Coat concealed surfaces of exterior aluminum in contact with grout, concrete, masonry, wood, or dissimilar metals, with a heavy coat of bituminous paint.

B. Mounting Methods:

1. Concealed Studs: Using a template, drill holes in substrate aligning with studs on back of sign. Remove loose debris from hole and substrate surface.
   a. Masonry Substrates: Fill holes with adhesive. Leave recess space in hole for displaced adhesive. Place sign in position and push until flush to surface, embedding studs in holes. Temporarily support sign in position until adhesive fully sets.
   b. Thin or Hollow Surfaces (e.g., metal panels, EIFS with backing plate, gypsum board): Place sign in position and flush to surface, install washers and nuts on studs projecting through opposite side of surface, and tighten.
2. Projecting Studs: Using a template, drill holes in substrate aligning with studs on back of sign. Remove loose debris from hole and substrate surface.
   a. Masonry Substrates: Fill holes with adhesive. Leave recess space in hole for displaced adhesive. Place spacers on studs, place sign in position, and push until spacers are pinched between sign and substrate, embedding the stud ends in holes. Temporarily support sign in position until adhesive fully sets.
   b. Thin or Hollow Surfaces: Place spacers on studs, place sign in position with spacers pinched between sign and substrate, and install washers and nuts on stud ends projecting through opposite side of surface, and tighten.

3.3 ADJUSTING AND CLEANING

A. Remove and replace damaged or deformed characters and signs that do not comply with specified requirements. Replace characters with damaged or deteriorated finishes or

components that cannot be successfully repaired by finish touchup or similar minor repair procedures.

B. Remove temporary protective coverings and strippable films as signs are installed. Do not leave UV-sensitive protective films installed longer than manufacturer allows.

C. On completion of installation, clean exposed surfaces of signs according to manufacturer's written instructions, and touch up minor nicks and abrasions in finish. Maintain signs in a clean condition during construction and protect from damage until acceptance by Owner.

END OF SECTION 101419

LAN ASSOCIATES / Haddonfield Gym

SECTION 101423 – INTERIOR SIGNAGE

PART 1 - GENERAL

1.1 SUMMARY

A. This Section includes interior architectural signage including, but not limited to:
   1. Room identification signs
   2. ADA tactile signs
   3. Directional and wayfinding signs
   4. Regulatory and code-required signage
   5. Changeable insert signs where indicated
   6. Vinyl graphics on walls or glazing where indicated

B. Code-compliance signage shall conform to requirements shown on the Architectural Title Sheets (T0.01, T0.02, etc.) and life-safety drawings.

C. Exterior signage, dimensional letters, and plaques are specified in other Sections.

1.2 REFERENCES

A. 2010 ADA Standards for Accessible Design, Section 703

B. ICC A117.1–2017 Accessible and Usable Buildings and Facilities

C. Applicable building and fire codes

D. NFPA 101, where required

E. ASTM standards for sign substrates and performance

1.3 SUBMITTALS

A. Product Data for sign materials, substrates, adhesives, and mounting hardware

B. Shop Drawings including message schedule coordinated with Room Names and Numbers shown on Drawings

C. Samples of each sign type with specified color, material, tactile text, and braille

D. Maintenance data and 2% attic stock (minimum three of each type)

1.4 QUALITY ASSURANCE

A. Manufacturer: Minimum 5 years producing ADA-compliant signs

B. Installer: Minimum 3 years installing ADA signage

C. Provide signs fully compliant with ADA 703 and ICC A117.1–2017

1.5 DELIVERY, STORAGE, AND HANDLING

A. Deliver signs individually wrapped. Store in dry, conditioned space.

1.6 PROJECT CONDITIONS

A. Install only after wall finishes are complete and surfaces are clean and dry.

PART 2 - PRODUCTS

2.1 GENERAL REQUIREMENTS

A. All signs of each type shall be by a single manufacturer. Substitutions per Division 01.

2.2 ADA TACTILE ROOM SIGNS

A. Substrate: Photopolymer or 1/8" acrylic

B. Tactile characters: 1/32" raised, sans-serif, uppercase

C. Braille: Grade 2, located per ADA

D. Finish: Matte, non-glare

E. Contrast: Minimum 70% light/dark contrast

F. Color: As selected by Architect

2.3 NON-TACTILE DIRECTIONAL SIGNS

A. Acrylic, photopolymer, or HPL

B. Applied or printed graphics

C. Colors and style coordinated with ADA signs

2.4 CHANGEABLE INSERT SIGNS (WHERE INDICATED)

A. Aluminum or acrylic frame

B. Clear lens cover

C. Paper or card insert, size indicated on Drawings

2.5 REGULATORY AND CODE-REQUIRED SIGNS

A. Room use, hazard, mechanical/electrical labels, evacuation diagrams, and other signage required by code

B. Provide materials consistent with primary sign system unless noted otherwise

C. Coordinate exact messages with Architectural Title Sheets and life-safety drawings

2.6 VINYL GRAPHICS

A. 2–3 mil interior cast vinyl film

B. Frosted/etch film on glazing where indicated

C. Colors as selected by Architect

2.7 MOUNTING HARDWARE

A. VHB tape for typical installations

B. Mechanical or tamper-resistant fasteners where indicated or required by substrate

C. Concealed fasteners wherever practical.

2.8 FABRICATION

A. Edges smooth and finished

B. Braille domed and compliant with ADA

C. Coordinate all room names and numbers with architectural drawings and door schedule

PART 3 - EXECUTION

3.1 EXAMINATION

A. Verify substrates are clean, dry, and fully finished before installation.

B. Confirm sign types and messages match the approved shop drawings.

3.2 INSTALLATION

A. Install per manufacturer instructions.

B. Signs shall be level, plumb, and securely fastened.

3.3 ADA MOUNTING LOCATIONS

A. Tactile signs:

B. 48" minimum to lowest tactile character

C. 60" maximum to highest tactile character

D. Mount on latch side of door; if no wall is available, mount on nearest adjacent wall

E. For double doors, mount to the right of the right-hand inactive leaf

F. Overhead signs: Minimum 80" above finished floor

3.4 VINYL GRAPHICS

A. Install on clean, smooth, dust-free surfaces.

B. Protect newly applied graphics until fully cured.

3.5 CLEANING AND PROTECTION

A. Clean surfaces after installation. Remove adhesive residue without damaging finish.

B. Protect signs until Substantial Completion.

3.6 SIGNAGE SCHEDULE

A. Sign types and messages shall be as indicated on the Drawings and coordinated with the approved message schedule.

END OF SECTION 101423

SECTION 102100 (NHG) - TOILET COMPARTMENTS

PART 1 GENERAL

1.1 SECTION INCLUDES

A. Compact Grade Laminate (CPL) toilet compartments, including the following:

1. Floor mounted toilet compartments.
2. Privacy screens.

1.2 RELATED SECTIONS

A. Section 061000 - Rough Carpentry.

1.3 REFERENCES

A. ASTM A 666 - Standard Specification for Stainless and Heat-Resisting Chromium-Nickel Steel Plate, Sheet, and Strip.

B. ASTM B 221 - Standard Specification for Aluminum and Aluminum-Alloy Extruded Bars, Rods, Wire, Profiles, and Tubes.

C. National Fire Protection Association (NFPA) 286 - Standard Methods of Fire Tests for Evaluating Contribution of Wall and Ceiling Interior Finish to Room Fire Growth.

D. ASTM E 84 - Standard Test Method for Surface Burning Characteristics of Building Materials.

1.4 SUBMITTALS

A. Submit under provisions of Section 013300 – Submittal Procedure.

B. Product Data: Manufacturer's data sheets on each product to be used, including:
1. Preparation instructions and recommendations.
2. Storage and handling requirements and recommendations.
3. Installation methods.

C. Shop Drawings: Provide layout drawings and installation details with location and type of hardware required.

D. Verification Samples: For each finish product specified, two samples representing actual product, color, and patterns.

1.5 QUALITY ASSURANCE

A. Manufacturer Qualifications: A company regularly engaged in manufacture of products specified in this section, and whose products have been in satisfactory use under similar service conditions for not less than 5 years.

B. Installer Qualifications: A company regularly engaged in installation of products specified in this Section, with a minimum of 5 years' experience.

C. Materials: Doors, panels and pilasters, constructed solid phenolic Compact Grade Laminate (CPL) panels. Partitions to be fabricated from polymer resins compounded under high pressure, forming a single component which is waterproof, nonabsorbent and has a self-lubricating surface that resists marks from pens, pencils, markers and other writing

instruments. Cover all plastic components with a protective plastic masking.

D. Performance Requirements: Material shall be compliant with IBC 2012 or later and must be solid CPL; foamed material is not allowed. Material shall be NFPA 286 compliant and classified as a Class B interior finish per IBC Chapter 8. Foamed plastic cores are not permitted.

1.6 DELIVERY, STORAGE, AND HANDLING

A. Store products in manufacturer's unopened packaging until ready for installation.

1.7 PROJECT CONDITIONS

A. Maintain environmental conditions (temperature, humidity, and ventilation) within limits recommended by manufacturer for optimum results. Do not install products under environmental conditions outside manufacturer's absolute limits.

1.8 WARRANTY

A. Manufacturer guarantees its plastic against breakage, corrosion, and delamination under normal conditions for 25 years from the date of receipt by the customer. If materials are found to be defective during that period for reasons listed above, the materials will be replaced free of charge. Labor not included in warranty.

PART 2 PRODUCTS

2.1 MANUFACTURERS

A. Basis of Design: Compact Grade Laminate (CPL) toilet partitions as manufactured by Bobrick Washroom Equipment, Inc.,

B. Other Acceptable Manufacturers: Scranton Products, ASI Global Partitions, or approved equal.

2.2 MATERIAL

A. **Compact Grade Laminate (CPL):** Solid phenolic core sheets consisting of melamine surface layers fused under high heat and pressure to a phenolic resin-impregnated kraft paper core.

1. Scratch and graffiti-resistant surface, non-porous, water- and impact-resistant, suitable for wet or dry toilet room conditions.
2. Thickness: 1 inch for doors, panels and pilasters.
3. Finish: Matte or low-sheen finish.
4. Color: Navy.
5. Fire Performance: ASTM E84 Class B or better, complying with NFPA 286 and IBC Chapter 8 requirements for interior finishes.

B. Hardware and Brackets: Manufacturer’s standard satin stainless steel type 304 components, heavy-duty construction, tamper-resistant fasteners.

2.3 TOILET COMPARTMENTS

A. Style: Floor-anchored, overhead-braced compartments.

B. Doors, Panels and Pilasters: Fabricated from CPL panels described above with eased edges and color-matched black phenolic core.

C. Color and Finish: Navy, matte texture.

D. Headrail and Brackets: Extruded aluminum or stainless steel, satin finish.

E. Hardware: Stainless steel hinges, latch, keeper, coat hook, and ADA-compliant door pull sets.

F. Accessibility: Provide compartments and hardware complying with ADA Standards and ICC A117.1, including outswing doors where required.

2.4 PRIVACY SCREENS

A. Provide plastic privacy screens in urinal and entry toilet room applications as indicated or scheduled.

B. Panels, and pilasters, if required, 1 inch (25 mm) thick with edges rounded to a radius. Screens to be mounted at 14 inches (356 mm) above the finished floor. Color as selected by Architect from manufacturer's full line of current colors.
   1. Aluminum heat sink fastened to bottom edges.
   2. Recycled content: Minimum 25 percent.

C. Screen Type: Wall mounted.
   1. Urinal Screens: 18 inches (610 mm) wide by 55 inches (1397 mm) high.

D. Wall Brackets: Provide aluminum continuous brackets. Fastened to the panel/pilaster with stainless steel tamper resistant torx head screws and fastened to wall with stainless steel tamper resistant torx head sex bolts.
   1. Length of Wall Brackets: 54 inches (1327 mm).
   2. Bracket Color: Grey.

PART 3 EXECUTION

3.1 EXAMINATION

A. Do not begin installation until substrates have been properly prepared.

B. If substrate preparation is the responsibility of another installer, notify Architect of unsatisfactory preparation before proceeding.

3.2 PREPARATION

A. Clean surfaces thoroughly prior to installation.

B. Prepare surfaces using the methods recommended by the manufacturer for achieving the best result for the substrate under the project conditions.

C. Examine areas to receive toilet partitions, screens, and shower astm acompartments for correct height and spacing of anchorage/blocking and plumbing fixtures that affect installation of partitions.

D. Verify locations of in-wall blocking and backing prior to installation. Coordinate with drawings and Section 061000 “Rough Carpentry” for blocking locations and materials. Report

discrepancies to the Architect.

3.3 INSTALLATION

A. Install in accordance with manufacturer's instructions.

B. Install partitions rigid, straight, plumb, and level manner, with plastic laid out as shown on shop drawings.

C. Clearance at vertical edges of doors shall be uniform top to bottom and shall not exceed 3/8 inch (9.5 mm).

D. No evidence of cutting, drilling, and/or patching shall be visible on the finished work.

E. Finished surfaces shall be cleaned promptly after installation. Remove protective film and leave free of scratches and residue.

3.4 PROTECTION

A. Protect installed products until completion of project.

B. Touch-up, repair or replace damaged products before Substantial Completion.

END OF SECTION 102100

PART 1 – GENERAL

1.1 RELATED DOCUMENTS

A. Drawings and general provisions of the Contract including General and Supplementary Conditions and Division 1 Specification Sections, apply to this Section.

1.2 SUMMARY

A. This Section includes the following:
   1. Manually operated, paired panel operable partitions.
B. Related Sections include the following:
   1. Division 03 Sections for concrete tolerances required.
   2. Division 05 Sections for primary structural support, including pre-punching of support members by structural steel supplier per operable partition supplier's template.
   3. Division 06 Sections for wood framing & supports, and all blocking at head and jambs as required.
   4. Division 09 Sections for wall and ceiling framing at head and jambs.

1.3 QUALITY ASSURANCE

A. Installer Qualifications: An experienced installer who is certified in writing by the operable partition manufacturer, as qualified to install the manufacturer's partition systems for work similar in material, design, and extent to that indicated for this Project.
B. Acoustical Performance: Test operable partitions in an independent acoustical laboratory in accordance with ASTM E90 test procedure and classified in accordance with ASTM E413 to attain no less than the STC rating specified. Provide a complete and unedited written test report by the testing laboratory upon request.
C. Preparation of the opening shall conform to the criteria set forth per ASTM E557 *Standard Practice for Architectural Application and Installation of Operable Partitions.*
D. The operable wall must be manufactured by a certified ISO-9001-2015 company or an equivalent quality control system.
E. Indoor Air Quality: Operable partition, movable wall manufacturer’s non-wood products must meet the SCS Indoor Advantage™ Gold Certification or equivalent. This approval guarantees conformance to indoor air concentrations meeting Indoor Advantage Gold Indoor Air Quality Certified to SCS-105 v4.2-2023 Conforms to ANSI/BIFMA M7.1 and X7.1 and the CDPH/EHLB Standard Method (CA 01350) v1.2-2017 conducted in an independent third-party air quality testing laboratory.

1.4 REFERENCE STANDARDS

A. ASTM International
   1. ASTM E557 Standard Practice for Architectural Application and Installation of Operable Partitions.
   2. ASTM E90 - Standard Test Method for Laboratory Measurement of Airborne Sound Transmission Loss of Building Partitions and Elements.
   3. ASTM C1036 - Standard Specification for Flat Glass.
   4. ASTM C1048 - Heat-Treated Flat Glass—Kind HS, Kind FT Coated and Uncoated Glass.
   5. ASTM E84 - Surface Burning Characteristics of Building Materials.
   6. ASTM E413 - Classification for Rating Sound Insulation
B. Health Product Declaration Collaborative
   1. Health Product Declaration Open Standard v2.1
C. International Standards Organization
   1. ISO 14021 - Environmental Labels and Declarations - Self-Declared Environmental Claims (Type II Environmental Labeling).
   2. ISO 14025:2011-10, Environmental Labels and Declarations - Type III Environmental Declarations - Principles and Procedures.

3. ISO 14040:2009-11, Environmental Management - Life Cycle Assessment - Principles and Framework.
4. ISO 14044:2006-10, Environmental Management - Life Cycle Assessment - Requirements and Guidelines.
5. ISO 21930 – Sustainability in Buildings and Civil Engineering Works — Core Rules for Environmental Product Declarations of Construction Products and Services.

D. Other Standards
1. ADA – Americans with Disabilities Act.
2. ANSI Z97.1 - Safety Glazing Materials Used in Buildings.
3. CPSC 16 CFR 1201 - Safety Standard for Architectural Glazing Materials.
4. NEMA LD3 - High Pressure Decorative Laminates.

1.5 SUBMITTALS

A. Product Data: Material descriptions, construction details, finishes, installation details, and operating instructions for each type of operable partition, component, and accessory specified.
B. Shop Drawings: Show location and extent of operable partitions. Include plans, elevations, sections, details, attachments to other construction, and accessories. Indicate dimensions, weights, conditions at openings, and at storage areas, and required installation, storage, and operating clearances. Indicate location and installation requirements for hardware and track, including floor tolerances required and direction of travel. Indicate blocking to be provided by others.
C. Setting Drawings: Show imbedded items and cutouts required in other work, including support beam punching template.
D. Samples: Color samples demonstrating full range of finishes available by architect. Verification samples will be available in same thickness and material indicated for the work.
E. Reports: Provide a complete and unedited written sound test report indicating test specimen matches product as submitted.
F. Create spaces that are healthy for occupants.
1. Furnish products and materials with Health Product Declaration (HPD), Manufacturer Inventory, or other material health disclosure documentation. Products without an HPD or other disclosure documentation are not acceptable.
G. Furnish materials that generate the least amount of pollution.
1. Furnish products and materials that have third party verified environmental product declarations (EPD's). Consider products and materials that have optimized environmental performance (reduced life cycle impacts). Products without an EPD or other disclosure documentation are not acceptable.
H. Buy American: Folding door to be manufactured in the United States in compliance with applicable U.S. Federal Trade Commission (FTC) and U.S. Customs Service and Border Protections regulations and be labeled "Made in America".

1.6 DELIVERY, STORAGE, AND HANDLING

A. Clearly mark packages and panels with numbering systems used on Shop Drawings. Do not use permanent markings on panels.
B. Protect panels during delivery, storage, and handling to comply with manufacturer's direction and as required to prevent damage.

1.7 WARRANTY

A. Provide written warranty by manufacturer of operable partitions agreeing to repair or replace any components with manufacturing defects.
B. Warranty period: Two (2) years.
C. Suspension System Warranty:
1. classroom: Five (5) years.

PART 2 – PRODUCTS

2.1 MANUFACTURERS, PRODUCTS, AND OPERATION

A. Manufacturers: Subject to compliance with requirements, provide product by the following:

1. Modernfold, Inc.
B. Doors to be manufactured in the U.S.A.
C. Products: Subject to compliance with the requirements, provide the following product:
   1. classroom: Acousti-Seal Premier - Paired Panel: Manually operated paired panel operable partition.

2.2 OPERATION
A. classroom: Acousti-Seal Premier - Paired Panel: Series of paired flat panels hinged together in pairs, manually operated, top supported with operable floor seals.
B. Final Closure:
   1. classroom: Horizontally expanding panel edge with removable crank

2.3 PANEL CONSTRUCTION

A. classroom: Nominal 3-inch (76mm) thick panels in manufacturer's standard 48-inch (1220mm) widths. All panel horizontal and vertical framing members fabricated from minimum 18-gage formed steel with overlapped and welded corners for rigidity. Top channel is reinforced to support suspension system components. Frame is designed so that full vertical edges of panels are of formed steel and provide concealed protection of the edges of the panel skin.
B. Panel skin shall be:
   1. classroom: 0.50-inch (13mm) tackable 100% recycled gypsum board, class "A" rated single material or composite layers continuously bonded to panel frame. Acoustical ratings of panels with this construction minimum:
      a. 50 STC
C. Hinges for Panels, Closure Panels, Pass Doors, and Pocket Doors shall be:
   1. classroom: Full leaf butt hinges, attached directly to the panel frame with welded hinge anchor plates within panel to further support hinge mounting to frame. Lifetime warranty on hinges. Hinges mounted into panel edge or vertical astragal are not acceptable.
D. Panel Trim: No vertical trim required or allowed on edges of panels; minimal groove appearance at panel joints.
E. Panel Weights:
   1. classroom: 50 STC - 8 lbs./square foot

2.4 PANEL FINISH

A. Panel finish shall be:
   1. classroom: Reinforced vinyl with woven backing weighing not less than 20 ounces (567 grams) per lineal yard.
B. Panel Trim: Exposed panel trim of one consistent color:
   1. classroom: To Be Advised

2.5 SOUND SEALS

A. Vertical Interlocking Sound Seals between panels: Roll-formed steel astragals, with reversible tongue and groove configuration in each panel edge for universal panel operation. Rigid plastic or aluminum astragals or astragals in only one panel edge are not acceptable.
B. Horizontal Top Seals: Continuous contact extruded vinyl bulb shape with pairs of non-contacting vinyl fingers to prevent distortion without the need for mechanically operated parts.
C. Horizontal bottom floor seals shall be:
   1. classroom: Modernfold IA2 Bottom seal. Automatic operable seals providing nominal 2-inch (51mm) operating clearance with an operating range of +0.50-inch (13mm) to -1.50-inch (38mm) which automatically drop as panels are positioned, without the need for tools or cranks.

2.6 SUSPENSION SYSTEM

A. classroom: #17 Suspension System
   1. Suspension Tracks: Minimum 11-gauge, 0.12-inch (3.04mm) roll-formed steel track, suitable for either direct mounting to a wood header or supported by adjustable steel hanger brackets, supporting the load-bearing surface of the track, connected to structural support by pairs of 0.38-inch (10mm) diameter threaded rods. Aluminum track is not acceptable.

a. Exposed track soffit: Steel, integral to track, and pre-painted off-white.
2. Carriers: One all-steel trolley with steel tired ball bearing wheels per panel (except hinged panels). Non-steel tires are not acceptable.

2.7 OPTIONS
A. (NONE SELECTED)

PART 3 – EXECUTION

3.1 INSTALLATION

A. General: Comply with ASTM E557, operable partition manufacturer's written installation instructions, Drawings and approved Shop Drawings.
B. Install operable partitions and accessories after other finishing operations, including painting have been completed.
C. Match operable partitions by installing panels from marked packages in numbered sequence indicated on Shop Drawings.
D. Broken, cracked, chipped, deformed or unmatched panels are not acceptable.

3.2 CLEANING AND PROTECTION

A. Clean partition surfaces upon completing installation of operable partitions to remove dust, dirt, adhesives, and other foreign materials according to manufacturer’s written instructions.
B. Provide final protection and maintain conditions in a manner acceptable to the manufacturer and Installer that ensure operable partitions are without damage or deterioration at time of Substantial Completion.

3.3 ADJUSTING

A. Adjust operable partitions to operate smoothly, easily, and quietly, free from binding, warp, excessive deflection, distortion, nonalignment, misplacement, disruption, or malfunction, throughout entire operational range. Lubricate hardware and other moving parts.

3.4 EXAMINATION

A. Examine flooring, structural support, and opening, with Installer present, for compliance with requirements for installation tolerances and other conditions affecting performance of operable partitions. Proceed with installation only after unsatisfactory conditions have been corrected.

3.5 DEMONSTRATION

A. Demonstrate proper operation and maintenance procedures to Owner's representative.
B. Provide Operation and Maintenance Manual to Owner's representative.

Modernfold, Inc.
215 West New Road
Greenfield, IN 46140
Toll Free: 800.869.9685
email: info@modernfold.com
www.modernfold.com

END OF SECTION 102226

SECTION 102800 - TOILET ROOM ACCESSORIES

PART 1 - GENERAL

1.01 SUMMARY

A. This section includes toilet and bath accessories in accordance with the Contract Documents. The Work of this Section shall include but not be limited to the following:

1. Surface, partition and recessed mounted toilet and bath accessories indicated on the Drawings and Schedules.

B. Related Sections:

1. Section 011000 – “Summary” for description of Owner-Furnished, Contractor-Installed (OFCI) and Owner-Furnished, Owner Installed (OFOI) items.
2. Section 092216 – “Non-Structural Metal Framing” for blocking required in stud walls for wall-mounted accessories.

1.02 SUBMITTALS

A. Product Data: Provide product data for each toilet accessory item specified, including details of construction relative to materials, dimensions, gauges, profiles, method of mounting, specified options and finishes.

B. Schedule: Indicating types, quantities, sizes and installation locations (by room) for each toilet and bath accessory item to be provided for the Project.

C. Setting Drawings: Where cutouts are required in other work, provide substrate preparation instructions, and directions for preparing cutouts and for installation of anchorage devices.

1.03 WORK INCLUDED

A. Toilet Room Accessories.

1.04 REFERENCES (including but not limited to)

A. ICC A117.1–2017 Accessible and Usable Buildings and Facilities
B. 2010 ADA Standards for Accessible Design
C. IBC 2021, Chapter 11 – Accessibility

1.05 QUALITY ASSURANCE

A. Manufacturers:

1. Model numbers for toilet room accessories manufactured by Bobrick Washroom Equipment, Inc. are listed to establish a standard of quality for design, function, materials, workmanship and appearance. The following manufacturers may be submitted for evaluation by the architect by following the conditions of the substitution clause. Unless approval is obtained, all bids shall be based on the standard of quality. The architect shall be sole judge as to the acceptability of all products submitted for substitution.

   a. Bobrick Washroom Equipment, Inc.
   b. American Specialties, Inc.
   c. Bradley
   d. Or Approved Equal.

2. Accessories shall be the products of a single manufacturer. Accessories with tumbler locks shall be keyed alike with the exception of coin boxes in vending equipment. All operable parts, including locks, shall comply with ADA operability requirements (no tight grasping, pinching, or twisting of the wrist; ≤5 lbf).

3. Regulatory Requirements

   Operation of accessories shall comply with guidelines set forth by the American Disabilities Act, Title III. Documentation and samples to be provided to architect upon request.

1.06 PRODUCT DELIVERY, STORAGE AND HANDLING

A. Deliver items in manufacturer's original unopened protective packaging.

B. Store materials in original protective packaging to prevent physical damage or wetting.

C. Handle so as to prevent damage to accessories.

1.07 WARRANTY

A. Furnish one-year guarantee against defects in material and workmanship on all accessories. In addition, to the above the following shall apply:

1. Welded stainless steel framed mirrors shall have a fifteen-year guarantee against silver spoilage.

PART 2 - PRODUCTS

2.01 GENERAL

A. General: Provide toilet and bath accessories at locations indicated on the Drawings and Schedules. Report any discrepancies between the Drawings and this Specification to the Architect prior to installation.

2.02 MATERIALS

A. All cabinets shall be constructed of 18-8, type-304 stainless steel.

B. All waste receptacles shall be constructed of 18-8, type-304 stainless steel or rigid molded leak-proof plastic.

C. Waste receptacles or cabinets manufactured of type-400 stainless steel are not acceptable.

D. All tumbler locks to be fastened to accessories with lock nuts. Fastening locks units with spring clips is not acceptable.

2.03 TOILET ROOM ACCESSORY SCHEDULE

A. See drawings for full toilet accessory schedule.

PART 3 - EXECUTION

3.01 INSPECTION

A. Check wall open for dimensions, plumbness of blocking or frames that would affect installation of recessed accessories. For surface mounted accessories check condition of wall and confirm installation of backing within wall.

B. Verify spacing of plumbing fixtures and toilet compartments that affect installation of toiler room accessories.

3.02 INSTALLATION

A. Install accessories at locations and heights indicated, straight, plumb and level and in accordance with manufacturer's installation instructions.

B. Install items with non-corrosive anchoring devices.

C. Installation methods shall conform to manufacturers recommendations for backing and proper support.

D. Conceal evidence of drilling, cutting and fitting to room finish.

E. Fit flanges of accessories snugly to wall surfaces.

F. Install accessories in compliance with ICC A117.1–2017 and 2010 ADA Standards, including:

a. Operable parts: 15–48 inches AFF.
b. Mirrors: Bottom of reflecting surface ≤40 inches AFF.
c. Grab bars: 33–36 inches AFF.
d. Towel/paper dispensers: Operable parts within accessible reach ranges.
e. Where Drawing dimensions conflict with ADA requirements, ADA shall govern.

3.03 ADJUSTMENT AND CLEANING

A. Upon completion of the work, or when directed, remove all traces of protective coatings or paper.

B. Adjust accessories for proper operation. Test mechanisms, hinges, locks and latches and where necessary adjust and lubricate.

C. Clean and polish exposed surfaces prior to final installation.

D. Deliver accessories schedule, keys and parts manual as part of project closeout documents. For owner's permanent records, provide two (2) sets of the following items of manufacturer's literature:

1. Technical data sheets of each item used for the project.

2. Service and parts manual.

3. Name of local representative to be contacted in the event of need of field service or consultation.

END OF SECTION 102800

SECTION 104300 - EMERGENCY AID SPECIALTIES

PART 1 - GENERAL

1.1 SUMMARY

A. Section includes:

1. Automated external defibrillator (AED).
2. Automated external defibrillator (AED) cabinet.

1.2 ACTION SUBMITTALS

A. Product Data: For each type of product.

B. Product Schedule: For automated external defibrillator cabinets. Coordinate final automated external defibrillator cabinet schedule with number and type of automated external defibrillators to ensure proper fit and function. Use same designations indicated on Drawings.

1.3 INFORMATIONAL SUBMITTALS

A. Warranty: Sample of special warranty.

1.4 CLOSEOUT SUBMITTALS

A. Operation and Maintenance Data: For automated external defibrillators and automated external defibrillator cabinets to include in maintenance manuals.

1.5 COORDINATION

A. Coordinate size of automated external defibrillator cabinets to ensure that type and capacity of automated external defibrillators indicated are accommodated.

B. Coordinate sizes and locations of automated external defibrillator cabinets with wall depths.

1.6 WARRANTY

A. Special Warranty: Manufacturer's standard form in which manufacturer agrees to repair or replace automated external defibrillators that fail in materials or workmanship within specified warranty period.

1. Warranty Period: 8 Years from date of Substantial Completion.

PART 2 - PRODUCTS

2.1 MANUFACTURERS

A. Basis-of-Design Product: Subject to compliance with requirements, provide Basis-of-Design products by Activar Construction Products Group, Inc. - JL Industries or comparable product by one of the following:

1. Automated External Defibrillator (AED):

a. HeartSine.
b. Philips.
c. Physio-Control.
d. Or approved equal

2. Automated External Defibrillator (AED) Cabinets:

a. Modern Metal Products.
b. Safety Technology, Inc.
c. Or approved equal

2.2 AUTOMATED EXTERNAL DEFIBRILLATOR (AED)

A. Automated External Defibrillator: Portable automated external defibrillator capable of automatically diagnosing life-threatening cardiac arrhythmias, suitable for use on adult or pediatric patients. Audible and visual with illuminated display icons operation. Type, size, and capacity for each cabinet indicated.

1. Basis-of-Design Product: Subject to compliance with requirements, provide Activar Construction Products Group, Inc. 1400 or comparable product.
2. Model: [LP-CR2-USB-AUTO
3. Storage Case: Manufacturer's standard.
4. Battery Capacity: 6hours.
5. Standby Life: 3.5years.
6. Optional Accessories: Additional Adult Pad-Pak

2.3 MOUNTABLE - AUTOMATED EXTERNAL DEFIBRILLATOR CABINET

A. Automated External Defibrillator (AED) Cabinet Type: Mountable AED cabinet of suitable type, size and capacity for automated external defibrillator.

1. Basis-of-Design Product: Subject to compliance with requirements, provide Activar Construction Products Group, Inc. - JL Industries; LifeStart 1400 cabinet product indicated or comparable product.

B. AED Cabinet Construction: Flush doors with 5/8-inch (15.88-mm) doorstop attached by continuous hinge and equipped with zinc-plated pull and roller catch.

1. Aluminum Steel Sheet Model: 1423
2. Cold-Rolled Steel Sheet Model: 1413
3. Stainless Steel Sheet Model: 1435

C. Cabinet Construction: Two-hour fire rated

D. Recessed Cabinet: Exposed 3/8-inch (9.53-mm) Flat Trim: One-piece combination trim and perimeter door frame overlapping surrounding wall surface, with exposed trim face and wall return at outer edge (backbend).

E. Semirecessed Cabinet: One-piece combination trim and perimeter door frame overlapping surrounding wall surface, with exposed trim face and wall return at outer edge (backbend).

1. Square-Edge Trim: 1-1/2-inch (38-mm) backbend depth.

G. Door Glazing: Acrylic sheet.

H. Door Hardware: Manufacturer's standard door-operating hardware of proper type for cabinet type, trim style, and door material and style indicated.

I. Alarm: Alarm that actuates when fire-protection cabinet door is opened and that is powered by batteries.

1. Basis-of-Design: Activar Construction Products Group, Inc. - JL Industries; "Commander," audible alarm or comparable Manufacturer's optional, siren strobe.

a. Alarm Contacts: 14MAG, Magnetic Door Contact for existing alarm systems.

J. Identification: Manufacturer's standard graphics and lettering complying with authorities having jurisdiction for letter style, size, spacing, and location.

K. Door Finish:

1. Aluminum: Anodized, Clear

3. Stainless Steel: Manufacturer's standard #4 Satin.

PART 3 - EXECUTION

3.1 EXAMINATION

A. Examine roughing-in for cabinets to verify actual locations of piping connections before cabinet installation.

B. Examine walls and partitions for suitable framing depth and blocking where semirecessed cabinets will be installed.

C. Proceed with installation only after unsatisfactory conditions have been corrected.

3.1 PREPARATION

A. Prepare recesses for semi-recessed automated external defibrillator cabinets as required by type and size of cabinet and trim style.

3.2 INSTALLATION

A. General: Install automated external defibrillator cabinets in locations and at mounting heights indicated or, if not indicated, at height indicated below: or, if not indicated, at heights acceptable to authorities having jurisdiction.

D. Identification:

1. Apply decals or vinyl lettering at locations indicated.

3.3 ADJUSTING AND CLEANING

A. Remove temporary protective coverings and strippable films, if any, as automated external defibrillator cabinets are installed unless otherwise indicated in manufacturer's written installation instructions.

B. Adjust automated external defibrillator cabinet doors to operate easily without binding. Verify that integral locking devices operate properly.

C. On completion of automated external defibrillator cabinet installation, clean interior and exterior surfaces as recommended by manufacturer.

D. Touch up marred finishes or replace automated external defibrillator cabinets that cannot be restored to factory-finished appearance. Use only materials and procedures recommended or furnished by automated external defibrillator cabinet manufacturer.

END OF SECTION 104300

SECTION 104413 - FIRE PROTECTION CABINETS

PART 1 - GENERAL

1.1 SUMMARY

A. Section Includes:

1. Fire-protection cabinets for the following:
   a. Portable fire extinguishers.

B. Related Requirements:

1. Section 104416 "Fire Extinguishers" for portable, hand-carried fire extinguishers accommodated by fire-protection cabinets

1.2 PREINSTALLATION CONFERENCE

1.3 ACTION SUBMITTALS

A. Product Data: For each type of product.

1. Show door hardware, cabinet type, trim style, and panel style. Include roughing-in dimensions and details showing recessed-, semirecessed-, or surface-mounting method and relationships of box and trim to surrounding construction.
2. Show location of knockouts for hose valves.

B. Shop Drawings: For fire-protection cabinets.

1. Include plans, elevations, sections, details, and attachments to other work.

1.4 CLOSEOUT SUBMITTALS

1.5 COORDINATION

A. Coordinate size of fire-protection cabinets to ensure that type and capacity of fire extinguishers indicated are accommodated.

B. Coordinate sizes and locations of fire-protection cabinets with wall depths.

C. Coordination of fire-protection cabinets applies only to fire extinguishers intended to be cabinet-mounted. Class K fire extinguishers shall be wall-mounted on exposed hooks or brackets in accordance with Section 104416 and NFPA 10, and are not required to be accommodated within fire-protection cabinets unless otherwise indicated.

PART 2 - PRODUCTS

2.1 MANUFACTURERS

A. Source Limitations: Obtain fire-protection cabinets, accessories, and fire extinguishers from single source from single manufacturer.

2.2 PERFORMANCE REQUIREMENTS

A. Fire-Rated Fire-Protection Cabinets: Provide fire-rated fire-protection cabinets only where installed in fire-resistance-rated walls or where required by authorities having jurisdiction. Fire-resistance rating of cabinets shall match the rating of the wall assembly in which they are installed. Fire-rated fire-protection cabinets shall be and labeled to comply with requirements in ASTM E814 for fire-resistance rating of walls where they are installed.

2.3 FIRE-PROTECTION CABINET (FEC)

A. Cabinet Type: Suitable for fire extinguisher.

1. Manufacturers: Subject to compliance with requirements, provide products by one of the following:
   a. Babcock-Davis.
   b. Guardian Fire Equipment, Inc.
   c. J. L. Industries, Inc.; Activar Construction Products Group, Inc.
   d. Larsen's Manufacturing Company.
   e. Or Approved Equal.

B. Cabinet Construction: Nonrated, unless otherwise indicated.

1. Fire-Rated Cabinets: Construct fire-rated cabinets with double walls fabricated from 0.043-inch- thick cold-rolled steel sheet lined with minimum 5/8-inch- thick fire-barrier material. Provide factory-drilled mounting holes.

C. Cabinet Material: Stainless steel sheet.

1. Shelf: Same metal and finish as cabinet.

D. Semirecessed Cabinet: One-piece combination trim and perimeter door frame overlapping surrounding wall surface, with exposed trim face and wall return at outer edge (backbend).

E. Rolled-Edge Trim: 2-1/2-inch backbend depth.

F. Cabinet Trim Material: Stainless steel sheet Same material and finish as door.

G. Door Material: Stainless steel sheet.

H. Door Style: Fully glazed panel with frame.

I. Door Glazing: Tempered float glass (clear) Acrylic sheet.

1. Acrylic Sheet Color:
   a. Clear transparent acrylic sheet.

b. Clear transparent acrylic sheet painted white on unexposed side.

J. Door Hardware: Manufacturer's standard door-operating hardware of proper type for cabinet type, trim style, and door material and style indicated.

1. Provide manufacturer's standard.
2. Provide manufacturer's standard hinge, permitting door to open 180 degrees.

K. Accessories:

1. Break-Glass Door Handle: Manufacturer's standard, integral to glass with the words "PULL TO BREAK GLASS" applied to handle.

L. Materials:

1. Stainless Steel: ASTM A240/A240M or ASTM A666, Type 304.
   a. Finish: ASTM A480/A480M No. 4 directional satin finish,
2. Tempered Float Glass: ASTM C1048, Kind FT, Condition A, Type I, Quality q3, 3 mm thick, Class 1 (clear) .
3. Transparent Acrylic Sheet: ASTM D4802, Category A-1 (cell-cast sheet), 1.5 3 6 mm thick, with Finish 1 (smooth or polished) .

2.4 FABRICATION

A. Fire-Protection Cabinets: Provide manufacturer's standard box (tub) with trim, frame, door, and hardware to suit cabinet type, trim style, and door style indicated.

1. Weld joints and grind smooth.
2. Miter corners and grind smooth.
3. Provide factory-drilled mounting holes.
4. Prepare doors and frames to receive locks.
5. Install door locks at factory.

B. Cabinet Doors: Fabricate doors according to manufacturer's standards, from materials indicated and coordinated with cabinet types and trim styles.

1. Fabricate door frames with tubular stiles and rails and hollow-metal design, minimum 1/2 inch thick.
2. Fabricate door frames of one-piece construction with edges flanged.
3. Miter and weld perimeter door frames and grind smooth.

C. Cabinet Trim: Fabricate cabinet trim in one piece with corners mitered, welded, and ground smooth.

2.5 GENERAL FINISH REQUIREMENTS

A. Comply with NAAMM's AMP 500, "Metal Finishes Manual for Architectural and Metal Products," for recommendations for applying and designating finishes.

B. Protect mechanical finishes on exposed surfaces of fire-protection cabinets from damage by applying a strippable, temporary protective covering before shipping.

C. Finish fire-protection cabinets after assembly.

D. Appearance of Finished Work: Noticeable variations in same piece are unacceptable. Variations in appearance of adjoining components are acceptable if they are within the range of approved Samples and are assembled or installed to minimize contrast.

PART 3 - EXECUTION

3.1 EXAMINATION

A. Examine walls and partitions for suitable framing depth and blocking where semirecessed cabinets will be installed.

B. Proceed with installation only after unsatisfactory conditions have been corrected.

3.2 PREPARATION

A. Prepare recesses for semirecessed fire-protection cabinets as required by type and size of cabinet and trim style.

3.3 INSTALLATION

A. General: Install fire-protection cabinets in locations and at mounting heights indicated or, if not indicated, at height indicated below: or, if not indicated, at heights acceptable to authorities having jurisdiction.

1. Fire-Protection Cabinet Mounting Height: 42 inches above finished floor to top of fire extinguisher.

B. Fire-Protection Cabinets: Fasten cabinets to structure, square and plumb.

1. Unless otherwise indicated, provide recessed fire-protection cabinets. If wall thickness is inadequate for recessed cabinets, provide semirecessed fire-protection cabinets.
2. Provide inside latch and lock for break-glass panels.
3. Fasten mounting brackets to inside surface of fire-protection cabinets, square and plumb.

C. Do not install fire-protection cabinets in kitchens or food service support spaces solely to house Class K fire extinguishers. Install Class K fire extinguishers on wall-mounted hooks or brackets in accordance with NFPA 10 and Section 104416.

D. Install fire-protection cabinets only at locations indicated on Drawings or required by fire-resistance-rated wall conditions. Do not install cabinets solely for the purpose of housing fire extinguishers not indicated to be cabinet-mounted.

3.4 ADJUSTING AND CLEANING

A. Remove temporary protective coverings and strippable films, if any, as fire-protection cabinets are installed unless otherwise indicated in manufacturer's written installation instructions.

B. Adjust fire-protection cabinet doors to operate easily without binding. Verify that integral locking devices operate properly.

C. On completion of fire-protection cabinet installation, clean interior and exterior surfaces as recommended by manufacturer.

D. Touch up marred finishes or replace fire-protection cabinets that cannot be restored to factory-finished appearance. Use only materials and procedures recommended or furnished by fire-protection cabinet and mounting bracket manufacturers.

E. Replace fire-protection cabinets that have been damaged or have deteriorated beyond successful repair by finish touchup or similar minor repair procedures.

END OF SECTION 104413

SECTION 104416 - FIRE EXTINGUISHERS

PART 1 - GENERAL

1.1 SUMMARY

A. Section includes:

1. Portable, hand-carried fire extinguishers and mounting brackets for fire extinguishers.

2. Fire extinguishers for general building areas and specialty locations including kitchens and food service support spaces.

B. Related Requirements:

1. Section 104413 "Fire Protection Cabinets."

1.2 ACTION SUBMITTALS

A. Product Data: For each type of product. Include rating and classification, material descriptions, dimensions of individual components and profiles, and finishes for fire extinguisher and mounting brackets.

1.3 INFORMATIONAL SUBMITTALS

A. Warranty: Sample of special warranty.

1.4 CLOSEOUT SUBMITTALS

A. Operation and Maintenance Data: For fire extinguishers to include in maintenance manuals.

1.5 COORDINATION

A. Coordinate type and capacity of fire extinguishers with fire-protection cabinets to ensure fit and function.

1.6 WARRANTY

A. Special Warranty: Manufacturer's standard form in which manufacturer agrees to repair or replace fire extinguishers that fail in materials or workmanship within specified warranty period.

1. Failures include, but are not limited to, the following:
   a. Failure of hydrostatic test according to NFPA 10 when testing interval required by NFPA 10 is within the warranty period.
   b. Faulty operation of valves or release levers.
2. Warranty Period: Six years from date of Substantial Completion.

PART 2 - PRODUCTS

2.1 PERFORMANCE REQUIREMENTS

A. NFPA Compliance: Fabricate and label fire extinguishers to comply with NFPA 10, "Portable Fire Extinguishers."

1. Provide fire extinguisher types, sizes, and classifications as required by NFPA 10 based on hazard classification of the space served.

B. Fire Extinguishers: Listed and labeled for type, rating, and classification by an independent testing agency acceptable to authorities having jurisdiction.

1. Provide fire extinguishers approved, listed, and labeled by FM Global.

2.2 PORTABLE, HAND-CARRIED FIRE EXTINGUISHERS

A. Fire Extinguishers: Type, size, and capacity for each fire-protection cabinet and mounting bracket indicated.

1. Manufacturers: Subject to compliance with requirements, undefined:
   a. Amerex Corporation.
   b. Guardian Fire Equipment, Inc.
   c. J. L. Industries, Inc.; Activar Construction Products Group, Inc.
   d. Larsen's Manufacturing Company.
   e. Or Approved Equal.
2. Source Limitations: Obtain fire extinguishers, fire-protection cabinets, and accessories, from single source from single manufacturer.

B. Multipurpose Dry-Chemical Type FEC: UL-rated 10 lb nominal capacity, with monoammonium phosphate-based dry chemical in manufacturer's standard enameled container.

C. Class K Fire Extinguishers: UL-listed wet chemical fire extinguishers specifically rated for Class K hazards, suitable for use on cooking appliances involving vegetable or animal oils and fats. Provide stainless steel or corrosion-resistant construction where located in food preparation or warming kitchen areas.

2.3 MOUNTING BRACKETS

A. Mounting Brackets: Manufacturer's standard galvanized steel, designed to secure fire extinguisher to wall or structure, of sizes required for types and capacities of fire extinguishers indicated, with plated or red baked-enamel finish.

1. Manufacturers: Subject to compliance with requirements, provide products by one of the following:
   a. Amerex Corporation.
   b. Guardian Fire Equipment, Inc.
   c. J. L. Industries, Inc.; Activar Construction Products Group, Inc.
   d. Larsen's Manufacturing Company.
   e. Or Approved Equal.
2. Source Limitations: Obtain mounting brackets and fire extinguishers from single source from single manufacturer.

B. Identification: Lettering complying with authorities having jurisdiction for letter style, size, spacing, and location. Locate as indicated by Architect.

1. Identify bracket-mounted fire extinguishers with the words "FIRE EXTINGUISHER" in red letter decals applied to mounting surface.
   a. Orientation: Vertical.

PART 3 - EXECUTION

3.1 EXAMINATION

A. Examine fire extinguishers for proper charging and tagging.

1. Remove and replace damaged, defective, or undercharged fire extinguishers.

B. Proceed with installation only after unsatisfactory conditions have been corrected.

3.2 INSTALLATION

A. General: Install fire extinguishers and mounting brackets in locations indicated and in compliance with requirements of authorities having jurisdiction.

B. Mounting Brackets: Fasten mounting brackets to surfaces, square and plumb, at locations indicated.

1. Mounting Height: Top of fire extinguisher to be at 42" ANSI above finished floor.

C. Provide Class K fire extinguishers in kitchens and food service support spaces where cooking, warming, or heating appliances are installed, in locations and quantities as required by NFPA 10 and authorities having jurisdiction. Coordinate exact locations with kitchen equipment layout and fire protection requirements.

END OF SECTION 104416

SECTION 114000 (TES) - FOOD SERVICE EQUIPMENT

PART 1 - GENERAL

1.01 GENERAL REQUIREMENTS

A. Work of this Section shall conform to the requirements of the Contract Documents including drawings and general provisions of the Contract, including General and Supplementary Conditions and Division 01 Specification Sections.

1.02 BIDS

A. Food service equipment indicated in this Section and on the food service drawings is Owner-Furnished/Owner-Installed (OFOI), unless specifically indicated otherwise. The three-compartment sink, hand sink, and ice maker are new plumbing fixtures and shall be furnished and installed by the Contractor. Refer to Plumbing Drawings and Division 22 specifications for additional requirements for these fixtures. Contractor shall provide and coordinate the building infrastructure required to support and connect the OFOI food service equipment and the Contractor-furnished plumbing fixtures.

B. Any denotation to specific trade responsibility (ie: Kitchen Equipment Contractor (KEC), Electrical Contractor (EC), Plumbing Contractor (PC), etc.) mentioned shall fall under the scope of the General Contractor (GC). The GC is responsible to hire all necessary sub-contractors.

C. Raymond/ Raymond Associates is herein identified as the Food Service Consultant.

D. Bids must be based on equipment of manufacturers specified; no substitution will be accepted after the award of Contract.

E. Substitutions: When a product or material is specified by name and or model number, as noted in these specifications, such specifications establishes the standard type and quality considered most satisfactory for the particular purpose in the building. The bid proposal therefore should be based thereon, so that all bidders bid under the same conditions. Another product or material of the same type that meets the requirements may be submitted for consideration as a substitute only under the following conditions:

F. Requests for substitution must be submitted in writing at least ten (14) business days before the date set for the receipt of bids for review and approval by the design professional. If the substitution is found to be equivalent, all bidders will be notified prior to the receipt of bids.

1. In providing substitution requests, the bidder must prove equivalence of the substitution and furnish detailed specifications and catalog cuts or drawings. Failure to identify exceptions or deviations from equipment specified must be interpreted to indicate that the product offered complies with the specification in every respect.

2. Owner, Architect and Food Service Consultant reserves right to waive any informality or reject any or all bids and any parts thereof, or to accept that bid as a whole or part that in his judgment is for the best interest of Owner. All bids to have on Contractor's letterhead itemized cost of each item of equipment, otherwise bid will be rejected.

G. Custom fabrication, millwork, equipment, etc. must be built by a company continually in business for at least a 5-year period.

H. Contract documents convey a method of construction for custom fabrication; however this may or may not be the appropriate method based on selected fabricators industry knowledge and standards. It will be the responsibility of the selected fabricator to interpret and apply appropriate methods of construction for full functionality of custom fabrication.

1.03 WORK INCLUDED

A. Contractor shall coordinate with the Owner, Owner's food service equipment supplier/installer, Food Service Consultant, and all affected trades so that supporting infrastructure, utilities, rough-ins, connections, blocking, penetrations, and interfaces are provided in the correct locations and sequence for a complete installation by Owner.

B. Owner shall furnish and install food service equipment, except for the three-compartment sink, hand sink, and ice maker, which shall be furnished and installed by Contractor as new plumbing fixtures. Refer to Plumbing Drawings and Division 22 specifications for fixture requirements, rough-ins, connections, drainage, accessories, and related work. Contractor shall provide mechanical, plumbing, electrical, ventilation, fire alarm/interface, fire-suppression interface, blocking, sleeves, anchors, penetrations, patching, and other building work required to support and connect the equipment and fixtures, as indicated in the Contract Documents and manufacturer requirements.

C. Contractor shall furnish and install valves, traps, faucets, shut-offs, pressure-reducing valves, relief valves, backflow preventers, vacuum breakers, indirect waste piping, gas valves, disconnects, starters, controls, interfaces, and other specialty infrastructure items required outside of or at the points of connection to OFOI food service equipment, unless specifically furnished integral with the equipment by Owner.

D. Contractor shall coordinate and provide required building penetrations, sleeves, blocking, backing, supports, patching, escutcheons, firestopping, and trim associated with utility rough-ins and connections serving OFOI food service equipment. Cut-outs or knock-outs in equipment itself shall be by Owner or Owner's installer, unless otherwise coordinated and accepted by Owner.

E. Where exhaust hoods are OFOI, Owner shall furnish and install hood equipment; Contractor shall provide ceiling structure coordination, blocking/support steel as required by the Contract Documents, duct connections, electrical connections, control/interface wiring, fire alarm/interface provisions, penetrations, patching, and related infrastructure required for operation.

F. Where walk-in cooler/freezer or panelized equipment is OFOI, Owner shall furnish and install equipment assemblies; Contractor shall provide required slab, curbs, depressions, drainage, electrical rough-ins, refrigeration line pathways, sleeves, penetrations, supports, and related building infrastructure shown or required for connection.

G. Contractor shall provide refrigeration rough-ins, sleeves, penetrations, supports, pathways, power, controls, condensate drainage, and other building infrastructure required for remote refrigeration equipment furnished and installed by Owner, unless specifically indicated otherwise.

H. Contractor shall provide fire suppression, fire alarm, electrical, plumbing, gas shut-off, shunt trip, monitoring, and interface infrastructure required to support OFOI hood/fire-protection equipment, including connections to building systems and coordination with the authority having jurisdiction.

I. KEC shall stack rubbish waste material, crating, etc., resulting from work and keep the premises organized at all times. Upon completion of the installation, thoroughly clean all equipment. Final sanitation cleaning by owner.

1.04 POWER AVAILABLE

A. Electric Voltage: 120/208/480 volt, 60 cycle, 1 & 3 ph.

B. Water Pressure: Typical Food Service Equipment range 20 to 90 PSI, if required, pressure reducing valves provided by Plumbing Contractor.

C. Water Temperature(s):

1. 110°-120° Fahrenheit max at hand washing sinks, work sinks and preparation sinks.

2. 120°-140° Fahrenheit max at 3-compartment pot sink, dishwashers and hose reel assembly.

3. 110°-120° Fahrenheit max at cooking equipment with faucet assembly.

D. Gas Pressure: Typical Food Service Equipment range 5” W.C. to 10” W.C., if required, a gas pressure reducing valve at main feed, prior to equipment connection, to be provided by Plumbing Contractor.

1.05 GENERAL CHARACTERISTICS OF EQUIPMENT

A. Electrically Operated

1. Electrically operated equipment to be listed by Underwriters Labs., Inc.

2. Motors: Up to and including 3/4 horsepower, shall be 120/60/1.

3. Motors: Over 3/4 horsepower, 208/60/3, unless otherwise indicated.

4. Ranges, food warmers, etc., over 2.0 kW, 208/60/1 or 208/60/3, unless otherwise indicated.

5. Electrically heated equipment, etc., 2.0 kW and under, 120/60/1.

6. 1 ph. electrical plug-in units with 3 wire cords; 3 wire cap.

7. 3 ph. electrical plug-in units with 4 wire cords; 4 wire cap.

8. Motor driven equipment: equipped with starting switch.

9. Motors: equipped with overload protection.

10. Wiring on fixtures, including operating switches and pilots, furnished by Kitchen Equipment Contractor.

B. Submit in writing to Architect and Food Service Consultant for approval, schedule showing proposed electrical characteristics of each piece of equipment and disconnect means provided.

C. Punch holes for, and install hood and walk-in cooler/freezer lights and concealed conduits. The interconnection of same, including control switch, wiring, inter-wiring between sections, etc., by Electrical Contractor.

1.06 WORK EXCLUDED FROM THIS DIVISION

A. The following work is to be performed by the Contractor and appropriate subcontractors as building infrastructure supporting Owner-Furnished/Owner-Installed food service equipment. The Contractor is responsible for coordination among trades and with Owner's food service equipment supplier/installer.

1. Electrical Contractor

a. Make connections to all food service equipment as shown.

b. Furnish disconnect switches.

c. Interconnecting of all exhaust hood lights, switches, control packages, interfaces, etc. including inter-wiring between sections of exhaust hoods.

d. Interconnecting of control switches as required on equipment shown, and all other components which come as part of any equipment shown on plan.

e. Interconnecting of any equipment, including, but not limited to, walk-in coolers/ freezers monitoring, exhaust hood monitoring and/ or fire protection monitoring with building management systems.

f. Review all manufacturer approved installation methods/ diagrams and comply for proper installation of equipment being furnished.

2. Plumbing Contractor

a. Furnish and install the three-compartment sink, hand sink, and ice maker as new plumbing fixtures, complete with hot and cold water, waste, indirect waste, condensate, and related connections, shut-offs, traps, backflow preventers, vacuum breakers, drain line runs, accessories, and appurtenances required for a complete installation. Refer to Plumbing Drawings and Division 22 specifications for fixture requirements, piping, drainage, accessories, and installation criteria. Make hot and cold water, waste, and gas connections to other food service equipment shown as required to support OFOI equipment.

b. Install all faucets, pot fillers, filters and pressure regulators as furnished by Kitchen Equipment Contractor.

c. Clean existing grease interceptor as indicated on the Plumbing Drawings. Work shall be performed by the Contractor/Plumbing Contractor under the Single Prime Contract and coordinated with associated plumbing work.

d. Interconnecting of any and all other components that come as part of any other equipment shown.

e. Provide floor drains and floor sinks where shown and indirect piping to floor drains and floor sinks as indicated on drawings.

f. Review all manufacturer approved installation methods/ diagrams and comply for proper installation of equipment being furnished.

3. Ventilation Contractor

a. Furnish size, shape and location of vent collars for exhaust hood and make connections to these collars.

4. General Contractor

a. Provide and/or coordinate all work to the floors, walls and ceilings of the space.

b. Provide wall blocking where required and as indicated on food service drawings.

1.07 SUB-CONTRACTORS TO KITCHEN EQUIPMENT CONTRACTOR

A. Fire Protection Contractor for the wet chemical protection system within exhaust hood systems only and Refrigeration Contractor for the remote refrigeration packages for walk-in coolers/ freezers, rack systems, etc. are typical sub-contractors to the Kitchen Equipment Contractor.

B. KEC to provide the name and addresses of all sub-contractors furnished to Architect/Owner and Food Service Consultant at time of submitting shop drawings. Selection of sub-contractors must be approved by them; and if in their judgment any fail to prosecute work in strict accordance with drawings and contract, after due notice from Owner or his agent, shall discharge same, but this in no way releases Kitchen Equipment Contractor from his obligations and responsibility under the contract.

C. Every sub-contractor bound by terms and provisions of the contract so far as applicable to his work. Nothing contained herein shall create any contractual relations between any sub-contractor and Owner.

D. Kitchen Equipment Contractor fully responsible to Owner for acts and omissions of his/ her sub-contractors.

1.08 COORDINATION SUBMITTALS AND ROUGH-IN INFORMATION

A. Contractor shall obtain and coordinate Owner-provided food service equipment information, including manufacturer's installation instructions, utility requirements, rough-in locations, anchorage requirements, blocking requirements, clearances, access requirements, and interface requirements. Submit coordinated rough-in drawings indicating plumbing, mechanical, electrical, ventilation, fire alarm/interface, fire suppression/interface, blocking, penetrations, sleeves, supports, and other building infrastructure required to support the OFOI equipment.

B. Submit in same manner as above, drawings showing masonry bases, depressed floors, positions of walls, requirements for ceiling hangers, wall blocking, and any other special

conditions necessary for complete and correct correlation of various trades for satisfactory installation of all equipment shown on drawings.

C. Manufacturer's names, cuts, descriptive data, analysis of tests, rated capacities and other information necessary for approval of standard manufactured articles and equipment furnished to Architect/Owner and Food Service Consultant for approval before ordering or purchasing. This submission made in same manner as above. All cuts marked with item number, mechanical characteristics, accessories furnished and bound in folders.

1.09 GENERAL

A. No machine or equipment acceptable from any manufacturer not having had equipment of approximately the same type and design as that specified operating successfully for at least 5 years. Machines installed for test purposes shall not come within the category of successful commercial operation.

B. Architect/Owner and/or Food Service Consultant privileged to inspect material and fabrication at Kitchen Equipment Contractor's or its sub-contractors factory at any time.

C. Before proceeding with shop work, Kitchen Equipment Contractor to verify all measurements at premises. Where required dimensions are not immediately obtainable and delay in waiting for these dimensions would cause work to be seriously delayed, the matter shall be referred to Architect for a decision. In obtaining measurements, Kitchen Equipment Contractor shall consider work requirements of other trades and equipment designed and fabricated to provide necessary clearance for surrounding and adjoining work.

D. Kitchen Equipment Contractor responsible for making any and all necessary adjustments to complete his work in a workmanlike manner, as approved by Architect/Owner.

E. Dimensions as indicated on drawings and specifications are approximate, and are to be adjusted if and where necessary to suit job conditions and field measurements.

F. Tops of tables, shelves, tops and exterior panels of cabinets, counters, doors, drainboards, etc., to be constructed of a single sheet of metal. Where size of equipment requires more than 1 sheet of metal, sheets butt joined with joints continuously welded full length. No joints less than 18" from an edge or end of a piece of equipment. In addition, all joints shall have battens or stiffeners welded to jointed material, ground smooth and polished.

G. Appliances of rigid construction free from objectionable vibration and quiet in operation.

H. Electrical heating elements shall conform to latest standards of National Electrical Manufacturer's Association and Underwriters Labs., Inc., where applicable standards have been set up by such agencies.

I. Motors of ample power to operate machines for which designated under full load operating conditions without exceeding nameplate ratings. Horsepower requirements on driven equipment determined by manufacturer, based on normal operation of maximum capacity.

J. Motors drip-proof, splash-proof or totally enclosed type, having two-hour duty cycle and ball bearings (except small timing motors which may have sleeve bearings). All motors shall have windings impregnated to resist moisture. Motors located where adjacent to deposits of dust, lint, etc., totally enclosed type.

K. It is the responsibility of the Kitchen Equipment Contractor to supply and mount all electrical outlets, switches, controls, etc. within table/counter back splashes, aprons, panels, etc. and to provide stainless steel cover plates as required. Furthermore, it is the responsibility of the Electrical Contractor, in coordination with the Kitchen Equipment Contractor, to make final interconnections within table/counter interior to junction boxes, outlets, switches, controls, etc. for equipment indicated.

1.10 STAINLESS STEEL (S.S.)

A. Where S.S. is specified, it shall be Type 304, nickel bearing iron alloy, containing approximately 17.0% to 19% chromium, 8% to 10% nickel, not more than 0.2% carbon, and not more than 2.0% of other alloying elements; designed being austenitic (non-magnetic).

B. S.S. free from scale with all surfaces polished to a high commercial finish. All welding and exposed welds hereinafter specified, must be ground down and polished smooth to a #4 finish so that no evidence of welding will appear. Unexposed welds on underside of counter or tables ground smooth and treated with an acid solution to remove weld discoloration and oxidization and to arrest corrosion.

C. Undersides of all counters, work tables, sinks, drain boards, etc., after fabrication, to have one (1) heavy coat of sound deadening material applied as allowed by local codes.

D. Gauges for sheet iron and sheet metal, U.S. Standard.

E. Rivets, welds, bolts, screws, nuts and washers to be steel except where brass or S.S. is fastened, in which case they shall be brass or S.S., respectively. Where dissimilar metals are fastened, welds, bolts, rivets, screws, nuts and washers, highest grade metal. Spacing and extent of welds, rivets, bolts and screws such as to insure suitable fastening and prevent bulging of metals fastened.

1.11 SANITATION

A. All custom built equipment constructed in accordance with standard No. 2, 4 & 7 of National Sanitation Foundation Testing Laboratory, manufactured by a company approved by N.S.F. and carry their stamp of approval. Kitchen Equipment Contractor must have "Registered" numbered seal of N.S.F. approval.

1.12 OPERATING INSTRUCTIONS

A. Kitchen Equipment Contractor shall leave all items of equipment in good, operating condition and furnish the services of a "qualified" competent manufacturer's representative to instruct Owner's employees in proper use and care of equipment. Representative on call for as long a period as is necessary to assure Owner that such instruction is thoroughly understood.

B. Kitchen Equipment Contractor shall be responsible for scheduling of equipment demonstrations and/or training and shall provide a detailed list of expected dates, times and manufacturer’s representative to be present (in attendance) for each piece of equipment.

C. Kitchen Equipment Contractor or his qualified manufacturer's representative, thereafter, shall make all necessary calls during warranty period.

1.13 SAMPLES

A. After Award of Contract, when requested, Kitchen Equipment Contractor shall supply Architect with samples of fabricated equipment, such as corner of table with a rolled or inverted "V" edge, corner of dish table, overshelf, drawer assembly, table leg with foot and gusset, or as specifically requested.

1.14 GUARANTEE

A. Kitchen Equipment Contractor shall guarantee, as part of the bid and/or contract, workmanship, material and equipment for a period of 1 year from date of equipment final install and project turnover to Owner, and shall remedy any defect due to faulty workmanship or materials which may appear within guarantee period.

B. Manufacturer's operation and maintenance manuals on equipment, etc., turned over to the Owner in duplicate, bound in a folder and marked accordingly.

1.15 EQUIPMENT CONSTRUCTION AND STANDARDS

A. Where initials S.S. are used, they refer to "stainless steel;" C.P. refers to "chrome plated;" N.I.C. refers to "not in contract;" G.I. refers to "galvanized iron;" F.D. refers to "floor drain", and F.S. refers to "floor sink."

1.16 WASTES AND OVERFLOWS

A. Sinks to have the following waste and overflow assemblies:

1. For 1-1/2” NPT: Fisher model 74043 or approved alternate. Lever handle waste outlet with overflow assembly, 3-1/2" sink opening, self-centering stainless steel face flange with flat strainer, 12 gpm max flow rate, stainless steel lever handle with ball, overflow head with stainless steel faceplate and chrome plated cast red brass drain body.

2. For 2” NPT: Fisher model 74043 or approved alternate. Lever handle waste outlet with overflow assembly, 3-1/2" sink opening, self-centering stainless steel face flange with flat strainer, 12 gpm max flow rate, stainless steel lever handle with ball, overflow head with stainless steel faceplate and chrome plated cast red brass drain body.

1.17 WATER INLET LOCATION

A. Located in all cases above the positive water level to prevent siphoning of liquid into water system. Wherever conditions require water inlet below such level, a suitable type of vacuum breaker shall be placed on fixture and form part of same to prevent such siphoning.

B. All faucets furnished by Kitchen Equipment Contractor as specified. Traps furnished by Plumbing Contractor.

1.18 PITCH AND DRAINAGE

A. Wherever a fixture is used with waste or drain outlet, surface shall have distinct pitch towards outlet. Drainboards and tables that contain or adjoin sinks shall have a definite pitch towards sinks. Where necessary, surfaces creased and grooved to give a definite pitch.

1.19 SINKS

A. #14 gauge S.S. interior corners rounded to 1" radius horizontally and vertically, forming a cove in bottom. All joints butt edged. Sink sizes given, inside measurements.

B. Bottom of each compartment creased to center and fitted with a rotary drain as described in section 1.16, hereinbefore specified. Waste lever not to protrude beyond body of sink. Sinks to have overflows installed by Kitchen Equipment Contractor.

C. Overflow to consist of 1-1/2" chrome plated brass strainer plate, fitted in back of each compartment at proper level directly connected to waste outlet with 1-1/2" chrome plated brass pipe.

D. Back of sink extended integrally approximately 12" above working level, back 2-1/4" on 45° angle towards rear and then flanged down 1" and punched to accommodate faucets.

E. Front and both ends, unless otherwise specified and shown, finished on top edge, 3" above working level, with 1-1/2" diameter, 180° welded integral roll. Exterior corners rounded to a 2-1/2" radius, all integrally welded.

F. Sinks and drainboards finished on front and back edges only and left with straight edge on ends, so that drainboards may be welded thereto, forming integral units with top edge of rolled rim curbing formed on one horizontal plane across front to unit though surfaces of drainboards pitched to sinks.

G. Multiple compartment sinks divided with double wall #14 gauge S.S. partitions, all corners rounded same as corners in sinks, continuously welded in place.

H. Back, bottom and front of one continuous piece with no overlapping joints or open spaces between compartments.

1.20 SINK BOWL BUILT INTO TABLE TOP

A. Sink constructed integral with table top #14 gauge S.S. having all interior corners coved vertically and horizontally forming a cove in bottom. To have overflow, lever waste outlet, etc…, as hereinbefore specified for sinks in spec section 1.19.

B. All joints butt edged and welded, ground and polished, so that no evidence of welding will appear. All sink sizes inside measurements. Table top where shown, punched to receive deck type combination faucets, provided by Kitchen Equipment Contractor.

1.21 FAUCET AND BASKET DRAIN ASSEMBLY

A. Sinks to have the following faucet assemblies:

1. 3-Compartment Sink, Potwash:

a. 1 ea. Fisher model 74306 or approved alternate. Pre-Rinse assembly with 1.3 gpm flow rate or less, splash/ wall mount, 8" centers, add-on faucet 12" stainless steel tubular swing spout with 4" wrist blade handles, 36" flexible gooseneck hose with spray head, stainless steel spring with wall bracket, compression valves, 1/2" NPT female inlets, ADA compliant, NO LEAD and NSF approved. Deck mount assembly model 75485.

b. 1 ea. Fisher model 60798 or approved alternate. Faucet with 2.2 gpm flow rate or less, splash/ wall mount with 4" wrist blade handles, 8" centers, 12" stainless steel tubular swing spout, compression valves, 1/2"

NPT female inlets, ADA compliant, NO LEAD and NSF approved. Deck mount assembly model 57665.

2. 2-Compartment Sink, Preparation:

a. 1 ea. Fisher model 57665 or approved alternate. Faucet with 2.2 gpm flow rate or less, deck mount with 4" wrist blade handles, 8" centers, 12" stainless steel tubular swing spout, compression valves, 1/2" NPT female inlets, ADA compliant, NO LEAD and NSF approved. Splash/ wall mount assembly model 60798.

3. Work Sink (Built-in, Welded-In):

a. 1 ea. Fisher model 57665 or approved alternate. Faucet with 2.2 gpm flow rate or less, deck mount with 4" wrist blade handles, 8" centers, 12" stainless steel tubular swing spout, compression valves, 1/2" NPT female inlets, ADA compliant, NO LEAD and NSF approved. Splash/ wall mount assembly model 60798.

4. Hand Sink:

a. 1 ea. Fisher model 58696 or approved alternate. Faucet with 2.2 gpm flow rate or less, deck mount with 4" wrist blade handles, 4" centers, 6" stainless steel swivel gooseneck spout, compression valves, 1/2" NPT female inlets, ADA compliant, NO LEAD and NSF approved. Splash/ wall mount assembly model 62650.

B. All plumbing fixtures shall be certified CSA, ASME A112.18.1/CSA B125.1, AB1953/HSC 116875, Vermont Bill S152, NSF/ANSI 61 sec 9, annex F and G, NSF/ANSI 372 low lead content, ASTM F2324.

1.22 DRAINBOARDS

A. #14 gauge S.S. full width of sink carried up approximately 12" at back and where adjacent to wall and finished same as heretofore described for back of sink, and having 3" high curbing at front and ends not adjacent to walls and finished with integral 1-1/2" diameter 180° roll, unless otherwise specified.

B. Drainboards continuously welded to sinks.

C. Drainboards 30" long or less shall have 1-1/2" #16 gauge S.S. tubular braces secured at underside near front and welded to S.S. gusset at leg anchor. All others to have legs and cross bracing with full length and width undershelf as specified for tables.

1.23 TABLES WITH S.S. TOPS

A. Tops of #14 gauge S.S. 1 piece construction with all edges turned down into 2" integral 180° roll with all corners rounded to 2" radius forming a bullnosed corner. Corner welded and polished smooth.

B. Table tops thoroughly cross braced with 4" x 1" S.S. channel stiffeners #14 gauge welded to underside. All cross braces spaced not over 24" on center.

C. Table tops adjoining walls or adjacent equipment carried up approximately 6" and returned 1", down 1" at top and ends. Intersections of table top and raised edge coved to 1" radius. Where backsplash is exposed, it shall have finished S.S. back.

D. It is the responsibility of the K.E.C. to supply and mount all electrical outlets, switches, controls, etc. within table/counter back splashes, aprons, panels, etc. and to provide S.S. cover plates as required. Furthermore, it is the responsibility of the Electrical Contractor, in coordination with the Kitchen Equipment Contractor, to make final interconnections within table/counter interior to junction boxes, outlets, switches, controls, etc. for equipment indicated, if required.

1.24 LEGS AND CROSSRAILS

A. 1-5/8" O.D. #14 gauge S.S. tubular-type with S.S. bullet shaped feet having minimum vertical adjustment of 1-1/2" without showing threading or adjusting bolts. Feet fully enclosed on bottom. Adjustment of feet by means of a threaded shank attached to foot and screwed into a properly secured threaded member inside of leg. Construction of leg such that it shall fit over shank of foot so no liquid or other material can work their way into legs or foot.

B. Tops of legs attached to enclosed conical gussets of heavy gauge S.S. Gussets welded to #14 gauge S.S. 4" x 1" channels to underside on which they appear. Crossrails 1-1/2" O.D. #14 gauge S.S. coped and welded to legs approximately 10" A.F.F. or as specified.

1.25 NOT USED

1.26 OVERSHELF - WALL TYPE

A. #16 gauge polished S.S. with back edge turned up 2", remaining ends turned down in 1-1/2" diameter 180° roll with corners bullnosed welded, ground and polished.

B. Shelves supported by #12 gauge S.S. cantilever brackets. Shelf spaced 1" from walls when in place and secured to same with C.P. toggle bolts. Undersides secured to brackets with concealed welded studs, nuts and washers. Brackets spaced approximately 42" on center.

1.27 UNDERSHELVES

A. #16 gauge polished S.S. full length and width of table with all edges turned down into 2" wide channel. In way of table legs, shelf notched to fit contour of legs and fitted to same in neat, workmanlike manner to eliminate unsanitary crevices, fully welded, ground and polished.

B. Undershelves reinforced on underside with welded 4" x 1" longitudinal channels of #14 gauge S.S. where applicable. All signs of welding on shelf surface removed.

1.28 DRAWERS

A. Of #18 gauge S.S. all interior corners coved to a 1" radius both vertically and horizontally. All welds ground and polished to a uniform finish.

B. Front of #14 gauge polished S.S. and will extend on both sides of drawer body to conceal slides, corners welded, ground and polished. Space between drawer front and body fully enclosed at bottom, back and both sides by means of a #20 gauge S.S. filler, spot welded to drawer front and body, to provide a fully sealed, vermin-proof enclosure. Drawer front provided with a 5" C.H.G. # P46-1010 S.S. pull handle fastened in place by means of a concealed screws.

C. Drawer slides of #14 gauge S.S. fitted with 4 case hardened ball bearing rollers. Track attached to drawer is to have upper edge channel shaped to fit contour of roller rim to provide a positive drawer guide and prevent jarring. This drawer track firmly spot-welded to body. Outer track provided with auto stops to lock without the use of tools.

D. Where specified, drawer provided with removable synthetic carving board. Carving board is to slide into enclosure under drawer made of #14 gauge S.S. and extending across underside of carving board, with both sides turned up and welded to slide assembly. The 2 sides provided with #14 gauge S.S. angles with stops at rear fastened in place 1/8" above top surface of carving board to provide guide and storage compartment when carving board is not in use. Carving board is to measure approximately 21" x 21" x 1" thick.

E. Tool drawer 20" x 20" x 5" deep, bread drawer 20" x 20" x 10" deep. All drawers to have 4 pin paracentric keyed-alike built-in locks same as sliding and hinged doors. C.P. where exposed.

1.29 NOT USED

1.30 EXHAUST HOOD

A. Exhaust Hood material, construction, etc. to be in conformance with IMC section 507.

B. Dimensions approximately as shown on contract drawings and mounted at 80" A.F.F. to underside of hood. Final dimensions to be determined in field by Kitchen Equipment Contractor.

C. Proper anchorages, etc..., installed in ceiling joists, slab, etc..., by Kitchen Equipment Contractor prior to final finish of ceiling.

D. Body of #18 gauge stainless steel front, back and sides; straight as indicated on contract drawings. All joints to be flush welded. Where field joints occur, provide a pair of transverse frames, butted together and securely fastened following contour of hood structure.

E. Bottom rim of hood attached to channel of #14 gauge STAINLESS STEEL with mitered welded corners and butted field joints. Cross section inside of channel to measure approximately 2-1/2" horizontally, flanged upward tightly against interior lining of hood.

F. Above dishwashing machine, kettles and steamers or non-grease producing equipment, hood provided with sloped baffle at back arranged at 45° angle of #18 gauge stainless steel. Baffles to have sliding dampers of #16 gauge stainless steel mounted in #14 gauge stainless steel channel tracks. Each damper to have stainless steel handle fastened with concealed bolts.

G. Above ranges, ovens, fryers, griddles, etc. or grease producing equipment, hood provided with built-in filters at back extending full length and arranged at an angle of 45° easily removable without use of tools. Filters to be approximately 20" x 20" x 2" thick, of STAINLESS STEEL and expanded metal construction or as further indicated on contract drawings. Filters set into #14 gauge STAINLESS STEEL filter frame, bottom of which is integrally installed with back of hood and grease gutter for easy cleaning. Quantity and size of openings in plenum chamber as indicated in contract documents.

H. Hood(s) provided with STAINLESS STEEL hanger brackets, welded to top of hood, spaced not more than 36" on center.

I. Section of hood below ceiling or soffit, enclosed with vertical facing of #18 gauge STAINLESS STEEL. Panels not to exceed 36" in width, easily removable where required, provided with recessed finger grip or similar. Where panels meet at vertical joints flanged inward 1" to form a hairline joint. Channel extended 2" beyond perimeter of hood and provided with concealed full length angle member of 2" x 2" x 3/16" G.I. with clips for bolting to hanger angles, spaced approximately 36" on center. Hanger angles attached to 2" x 2" x 3/16" angle frame fastened to ceiling slab. Panels held in place at ceiling with 2" x 2" x 1/8" STAINLESS STEEL angle trim all around.

J. Hood(s) provided with recessed or flush vapor-proof LED light fixtures, approximately 12” X 12” style or 48" strip style, pre-mounted by manufacturer. Light fixture with bulb(s), as provided by specified exhaust hood manufacturer, refer to Part 2 Products. All wiring and interconnections by Electrical Contractor.

K. All exhaust hood controls, switches, etc... to be mounted @ 48" AFF. This is to be the maximum height allowed.

L. All wiring and interconnections for controls, switches, fans, solenoid, shunt trips, etc… by Electrical Contractor. This includes any requirements to and from remote panels, switches and control packages.

M. Must be tested and comply with the most current codes (or per local jurisdiction) UL-710, International Mechanical Code (IMC), and NFPA 96.

1.31 NOT USED

1.32 FIRE PROTECTION SYSTEM

A. The system shall be a pre-engineered cartridge-operated type R-102 system utilizing Liquid Ansulex agent, with a Fixed Nozzle distribution network. It shall be furnished and installed in compliance with UL Standard 1254, UL Standard 300, NFPA 96-2008 and any prevailing statutes or codes including automatic shut-down of all cooking appliances per code section 44 of NFPA 17A-27-2002.

B. System to provide connection to building Fire Alarm System per NFPA 17A; Section 3-2.1.5.

C. Fire protection remote pull stations mounted @ 48" AFF, located 10 ft. minimum to 20 ft. maximum from exhaust hood(s).

D. The extinguishing agent shall be a specifically formulated aqueous solution of organic salts contained in a S.S. tank with 3 gallons minimum capacity, and able to withstand test pressure of 330 PSI. A welded S.S. bracket shall be provided for mounting the tank.

E. The regulator releases mechanism shall be capable of providing sufficient expellant gas to discharge enough agent to meet the minimum nozzle discharge requirements. The mechanism shall have a visual indicator of "fired" condition. This mechanism shall be capable of being operated by fusible link detection, remote manual release and local manual release. The mechanism should be housed in a S.S. enclosure with cover containing identifications thereon.

F. Each discharge nozzle to be listed with UL approval for placement and size. Each nozzle shall have a rubber blow-off cap to keep the nozzle tip orifice free of cooking grease build-up. All exposed piping to be chrome plated finish, and there shall be no exposed threads.

G. Kitchen Equipment Contractor to furnish mechanical (electrical) gas valve, up to 3" in size and coordinate the install/provisions to shut-off all fuel supplies to all cooking appliances beneath Type I exhaust hood upon activation of system. If electrical gas valve is to be utilized, Kitchen Equipment Contractor to furnish reset relay push button.

It is the responsibility of the Plumbing Contractor to install, coordinate and make any provisions necessary for complete operation of gas valve.

It is the responsibility of the Electrical Contractor to furnish and install electrical wiring, relays, etc... and make any provisions necessary for complete operation of gas valve. In addition, Electrical Contractor to furnish and install automatic equipment necessary to shut-off all electric beneath Type I exhaust hood upon activation of system.

H. Kitchen Equipment Contractor to furnish and install a Class K Fire Extinguisher, dedicated to each room where a Type I exhaust hood is installed.

I. Upon completion of installation, the installer to perform a wet chemical test or at the time of the test, the authority having jurisdiction may allow the Contractor to use flushing concentrate and water solution. However, whichever is permitted, it must be in compliance with Code. This test shall activate the entire system, except the agent supply tank, which will be substituted by the test tank of like pressure and size. Following a satisfactory test, the original tank shall be replaced. The system shall then be certified to be in working order and all authorities shall be so advised in writing. Provide Owner with copies of all satisfaction/acceptance tests.

J. The system to be furnished and installed by a factory distributor in accordance with the manufacturer's instructions. This shall include mounting of the system units, manual releases, nozzles, actuating devices, and the running of all pipe and control tubing applicable to the R-102 system. If and when requested, submittal drawings concerning the fire system shall have affixed the seal and signature of a licensed engineer for the State in which they are to be installed. A 1-year service contract and maintenance program to be provided.

K. Kitchen Equipment Contractor is required to submit a copy of the hood suppression system shop drawing to the local authority having jurisdiction for approval, as well as submission to the Architect. In addition, shop drawings when submitted, must be signed and sealed by an engineer licensed to practice in the State where the system is to be installed.

1.47 COUNTER AND CABINETS WITH SEMI-ENCLOSED BASE

A. Top of #14 gauge polished S.S. finished 1/2" above working level with 2" diameter 180° roll, bullnosed corners on all exposed sides. Where adjacent to wall, top carried up approximately 6" (or as specified hereinafter and shown) and returned 1" at top and ends towards wall with corners welded forming a continuous unit. Top fastened to cabinet by means of welded and concealed studs.

B. Cabinet below top to have #18 gauge S.S. enclosure. Front stiles of cabinet channel shaped. This channel fully enclosed inside of cabinet. Top reinforced by means of horizontal framework of S.S. 1-1/2" x 1-1/2" x 1/8" angle with cross braces not more than 18" on center Framework of all welded construction and intermediate shelves in cabinet of #16 gauge S.S. turned up on all sides to eliminate crevices at shelf surface. Front edge of shelf channel shaped. Shelf surface reinforced by means of #16 gauge S.S. channel stiffeners spaced on not more than 24" on center. Mounted on 6" S.S. adjustable legs, or as hereinbefore shown and specified.

1.48 NOT USED

1.49 DOORS

A. Whether sliding or hinged type, not less than 1/2" thick overall, double paneled having 3/8" sound-deadening material between #16 gauge S.S. front and #18 gauge S.S. back, reinforced between panels by wide channels, running height of door and made of same material. Panels jointed with continuous welding. Doors and vent openings to have back panel boxed around vent opening and welded to front panel. Doors dust proof and entire front face without seams or joints.

B. Sliding doors mounted on ball bearing type rollers, sliding in dust proof #14 gauge S.S. tracks overhead, fastened so as to eliminate vibration and jarring when doors are rolled. Doors fitted with limit stops. Bottom guide of #14 gauge S.S. for doors, open and flat, lining up with lower shelf of cabinet - slots so arranged that crumbs or dirt accumulating in the cabinet will drop to the floor when cabinet is cleaned. Recessed handles solid material, not stamped, of S.S. welded to front panel. Finger grips of ample depth to comfortably pull the door. Doors provided with keyed-alike S.S. faced cylinder locks, built-in flush.

C. Hinged type doors flush fitting, unless otherwise specified, resting tightly against rabbetted frame. Hinged doors provided with Klein Model #Y-48 (or approved equal) keyed-alike S.S. faced cylinder locks with Model #12230-SM (or approved equal) handles. In case of pair of doors, each individually controlled as outlined and is to close against rubber bumpers.

D. Outer edges smooth, free from burrs, projections and fins. Excess welded metal removed by precision grinding and polishing.

1.50 REFRIGERATORS AND REFRIGERATION UNITS

A. Reach-in refrigerators, freezers, and refrigerated units, as shown unless otherwise specified, furnished by Kitchen Equipment Contractor They shall meet all requirements as set forth for individual item number and complete with self-contained or remote compressors and motors. Cooling coils blower type, unless otherwise called for, provided with initial charge of approved CFC free refrigerant. Plumbing Contractor responsible for extending refrigerator drain line, where required, to spill into adjacent floor drain in approved manner. Extended drain line not less than 3/4" I.D. and C.P. or S.S. tubing.

B. All refrigerated equipment, refrigerators and freezers, whether walk-in or reach-in, started and adjusted to maintain required temperatures, charged with approved refrigerant as required.

C. All reach-in refrigerators, freezers, hot food warmers, etc., to have keyed-alike locks. Kitchen Equipment Contractor must request this at time of placing order to avoid correction at a later date at Kitchen Equipment Contractor's expense.

D. Kitchen Equipment Contractor to provide 1 year's free service for all types of refrigerators and refrigeration equipment. Service to include all compressors, unit coolers, controls, etc., to include adjustments and repairs, irrespective of cause, whether mechanical, operational or manufacturing at no additional cost to Owner. Additionally, five (5) year warranty provided on all compressors, parts only or replacement.

PART 2 - PRODUCTS

2.01 All kitchen equipment is Owner-Furnished/Owner-Installed, except the three-compartment sink, hand sink, and ice maker, which shall be Contractor-furnished and Contractor-installed as new plumbing fixtures. Refer to Plumbing Drawings and Division 22 specifications for requirements applicable to these fixtures.

2.01A Contractor shall not include furnishing or installation of OFOI food service equipment in the Contract Sum, except for building infrastructure and connections expressly required by the Contract Documents to support Owner-Furnished/Owner-Installed equipment. Contractor shall include furnishing, installation, rough-ins, connections, testing, and accessories for the three-compartment sink, hand sink, and ice maker as part of the Contract Work, as further indicated on the Plumbing Drawings and in Division 22 specifications. Contractor/Plumbing Contractor shall also clean the existing grease interceptor where indicated on the Plumbing Drawings.

2.02 HAND SINK, WALL MNTD. – QTY. AS PER PLAN & SCHEDULE

John Boos & Co. Model PBHS-W-1410. Unit to be installed where shown on drawings. Provided with all features, options and accessories, per quantity required, as indicated:

- **Base Bid**
- 1 ea. Manual faucet, gooseneck
- 1 ea. Soap dispenser, integral
- 1 ea. Towel dispenser, integral
- 1 ea. Left and right splash guards
- Wall backing by General Contractor

Or as manufactured by IMC/ Teddy or Eagle Group/Metal Masters.

2.03 S.S. WALL PANEL(S), 87"L – QTY. AS PER PLAN & SCHEDULE

Captive Aire Model Custom. Size, shape and installed where shown on drawing. This is a fabricated item and is to be constructed as described in General Specifications and as further detailed on contract drawings. Provided with all features, options and accessories, per quantity required, as indicated:

- **Base Bid**
- Stainless steel panels, evenly sized, 20 Gauge
- Installed from top of coved base to underside of hood, entire length
- Hairline joints sealed with S.S. trim strips
- Secured to wall with heat resistant mastic

It is the responsibility of the Kitchen Equipment Contractor to coordinate and make all appropriate cut-outs in paneling based on utility requirements in this location and apply appropriate stainless steel trim strips, caps, gussets, etc…

Or as manufactured by Caddy or Accurex.

2.04 EXHAUST HOOD, TYPE I – QTY. AS PER PLAN & SCHEDULE

Captive Aire Model Custom. Size, shape and installed where shown on drawing. This is a fabricated item and is to be constructed as described in General Specifications and as further detailed on contract drawings. Provided with all features, options and accessories, per quantity required, as indicated:

- **Base Bid**
- Construction: 100% 430 stainless steel
- Filters: Stainless steel captrate solo with hook
- Insulation: Integral air/ insulation barriers at perimeter and top, 0" clearance to combustibles
- Structural front panel, insulated
- Wall / Island canopy hood, length/ size as per contract documents
- 2 ea. LED lights
- Stainless steel field wrap, approximately 18" high on all exposed sides
- Adjustable exhaust air volume control damper
- Hood Control Panel Package:

- EMSplus11 modulating energy management system with smart controls
- Built-in VFDs
- Duct Temperature Sensors in all risers
- Room Temperature Sensor
- Configurable through Touch Screen Interface
- EMS Duct Thermostat
- INVERTER DUTY THREE PHASE MOTORS REQUIRED

Or as manufactured by Caddy or Accurex.

2.05 EXHAUST HOOD, CONTROL PANEL – QTY. AS PER PLAN & SCHEDULE

Captive Aire Model Custom. Unit to be installed where shown on drawings. Provided with all features, options and accessories, per quantity required, as indicated:

- **Base Bid**
- Included as part of Item #11, Exhaust Hood

Or as manufactured by Caddy or Accurex.

2.06 FIRE PROTECTION SYSTEM – QTY. AS PER PLAN & SCHEDULE

Captive Aire Model TANK UL-300 (R-102). Unit to be installed where shown on drawing in strict accordance to that described in General Specifications. Provided with all features, options and accessories, per quantity required, as indicated:

- **Base Bid**
- Electrical: 120/1, Hardwired
- Provide connection to building Fire Alarm System
- For the protection of equipment beneath Exhaust Hood, Item #11

Or as manufactured by Caddy or Accurex.

2.07 3-COMPARTMENT SINK – QTY. AS PER PLAN & SCHEDULE

John Boos & Co. Model 3PB16204-2D24. Size, shape and installed where shown on drawing. This is a fabricated item and is to be constructed as described in General Specifications and as further detailed on contract drawings. Provided with all features, options and accessories, per quantity required, as indicated:

- **Base Bid**
- Counter Top Material: Stainless Steel, 14 Gauge
- 3 ea. Built-in work sinks, 20" L x 16" W x 14" D
- 3 ea. Waste valve with lever
- 3 ea. Tail piece
- 3 ea. Waste overflow
- 1 ea. Stainless steel pre-rinse assembly with 12" swing spout add-on faucet and wrist action handles, 1/2" connections
- 1 ea. Stainless steel common bowl skirt
- Flanged feet bolted to floor

Or as manufactured by IMC/ Teddy or Eagle Group/Metal Masters.

2.08 SHELF, WALL MOUNT – QTY. AS PER PLAN & SCHEDULE

Eagle Group/Metal Masters Model GWB1436VG. Unit to be installed where shown on drawings. Provided with all features, options and accessories, per quantity required, as indicated:

- **Base Bid**
- 1 ea. Wire shelf, epoxy coated
- 2 ea. Stationary wall mount brackets
- 2 ea. Dividers
- Wall backing by General Contractor

Or as manufactured by Metro or Focus.

PART 3 - EXECUTION

3.01 GENERAL RELATED CONDITIONS

A. In each item of equipment hereinafter specified under the "Equipment Schedule," these specifications shall only identify each respective item by name and model number, as well as list various component parts/ accessories provided for same.

B. Therefore, it shall be intended that these respective items and their component parts shall be of material (mounted where applicable) constructed and furnished in strict accordance to that described in the general specifications for these items and integrally constructed where applicable.

C. It shall also be intended that where buy-out (pre-fabricated) items are specified, same shall be definitely furnished with all the accessories as normally furnished by manufacturer for these items. Also in strict accordance with current manufacturer's engineering data sheet for each respective item.

D. Should no list or description be provided for various component parts/ accessories, the Kitchen Equipment Contractor is responsible to provide required components for full and proper operation of said equipment.

3.02 EXAMINATION OF PLANS AND SPECIFICATIONS

A. Prospective bidders for this work must examine these plans and specifications carefully before bidding, and must request from Architect and/or Food Service Consultant in writing for an interpretation or correction of every apparent ambiguity, inconsistency or error therein. If necessary, such interpretation or correction shall be issued in writing as an addendum.

3.03 SPECIAL NOTES

A. Contractor shall make as many visits to the job site as necessary and keep current with progress of rough-ins, penetrations, blocking, supports, utility connections, controls, and interfaces required to support and connect OFOI food service equipment. Include this coordination in the bid.

B. Kitchen Equipment Contractor to cooperate with all trades so that the end results of his/her work will be a satisfactory, approved and accepted installation. Written reports of each visit shall be sent promptly to the Architect and/or Food Service Consultant.

3.04 COORDINATION

A. Procedure of construction is of paramount importance in executions of this project. Kitchen Equipment Contractor to carry on his/her work so that no delay in his/her operations or those of any other contractors occurs at any time.

B. Kitchen Equipment Contractor to verify with Architect and/or Food Service Consultant as to opening date of the food service area(s), and schedule his/her fabrication and purchasing of equipment so that all will be in readiness, installed, connected, tested, demonstrated, etc., in ample time prior to the scheduled opening date.

3.05 DELIVERY AND INSTALLATION

A. Delivery, setting, assembly, and installation of food service equipment are by Owner. Contractor shall provide the mechanical, plumbing, electrical, ventilation, fire alarm/interface, fire suppression/interface, blocking, penetrations, sleeves, supports, rough-ins, final utility connections to building systems, testing of building infrastructure,

patching, and other work required to support and connect the OFOI food service equipment.

B. Any pieces of equipment may be delivered sectionally, but all working surfaces butt-welded, ground and polished on premises so that upon completion, such item of equipment will have true, smooth, even and continuous surfaces. Butt joining and filling with solder not permitted.

C. Kitchen Equipment Contractor must verify door sizes, delivery platform, elevator size, etc., effecting delivery to food service area(s) for all items of equipment.

3.06 RESERVATIONS AND CONDITIONS

A. It is the intent of this specification that food service equipment be furnished and installed by Owner, and that the Contractor provide complete building infrastructure necessary for the Owner's food service equipment to be supported, connected, tested as to building systems, and ready for Owner operation. Contractor shall examine the Contract Documents and Owner-provided equipment requirements and include all labor and materials required for supporting infrastructure within the Contract.

B. Kitchen Equipment Contractor shall attend job meetings when required for purpose of coordinating his/her work with other trades.

C. All equipment shall be received at the building fully protected. It will be the responsibility of the Kitchen Equipment Contractor to protect the equipment until completely installed and accepted.

END OF SECTION 114000 (TES)

11/19/2025

Project:
Tatem Elementary School
Equipment Cut Data

From:
Raymond/ Raymond Associates
Brett Farrell
44 St. John Street
Goshen, NY 10924
(845) 360-5112

To:

Table of Contents

PRE-RINSE FAUCET ASSEMBLY, WITH ADD ON FAUCET - T&S BRASS B-0133-ADF12 (ITEM FC-1) 1
HAND SINK - ADVANCE TABCO 7-PS-60 (ITEM HS-1) 4
ICE MAKER, CUBE-STYLE - MANITOWOC IDT0450A (ITEM ICE-1) 10
HEATED HOLDING PROOFING CABINET, MOBILE - METRO C539-CDC-4 (ITEM KE-2) 21
CART, UTILITY/BUSSING - LAKESIDE MANUFACTURING 521 (ITEM KE-3) 23
FLATWARE & TRAY CART - EAGLE GROUP DCS2-TPU (ITEM KE-4) 25
SNEEZE GUARD, STATIONARY - EAGLE GROUP DC5-SO-DT (ITEM KE-5) 27
SNEEZE GUARD, STATIONARY - EAGLE GROUP DC4-SO-DT (ITEM KE-5) 29
SERVING COUNTER, COLD FOOD - EAGLE GROUP DCS5-CFURN (ITEM KE-6) 31
HOT FOOD SERVING COUNTER / TABLE - EAGLE GROUP DCS4-HFU-B (ITEM KE-7) 33
WORK TABLE, CABINET BASE OPEN FRONT - ADVANCE TABCO EK-SS-248M (ITEM KE-8) 35
WORK TABLE, CABINET BASE OPEN FRONT - ADVANCE TABCO EB-SS-243 (ITEM KE-9) 37
CASH REGISTER STAND - EAGLE GROUP DCS-CUER-24 (ITEM KE-10) 39
CONVECTION OVEN, GAS - VULCAN VC44GD (ITEM OV-1) 41
HOTPLATE, COUNTERTOP, GAS - VENANCIO USA G48CT-48B (ITEM R1) 43
ROLL-IN FREEZER - TRUE MFG. - GENERAL FOODSERVICE STA2FRI-2S (ITEM REF-1) 47
OPEN DISPLAY MERCHANDISER - EVEREST REFRIGERATION EOMV-36-B-28-S (ITEM REF-3) 49
REACH-IN REFRIGERATOR - TRUE MFG. - GENERAL FOODSERVICE STA2R-2S-HC (ITEM REF-4) 51
THREE (3) COMPARTMENT SINK - EAGLE GROUP S14-20-3-18-SL (ITEM SK-4) 53

T&S BRASS AND BRONZE WORKS, INC.

2 Saddleback Cove / P.O. Box 1088
Travelers Rest, SC 29690

Travelers Rest, SC: 800-476-4103 • Simi Valley, CA: 800-423-0150 • Fax: 864-834-3518 • www.tsbrass.com

Model No.

B-0133-ADF12

Item No.

This Space for Architect/Engineer Approval

Job Name_____Date_____

Model Specified_____ Quantity_____

Customer/Wholesaler_____

Contractor_____

Architect/Engineer_____

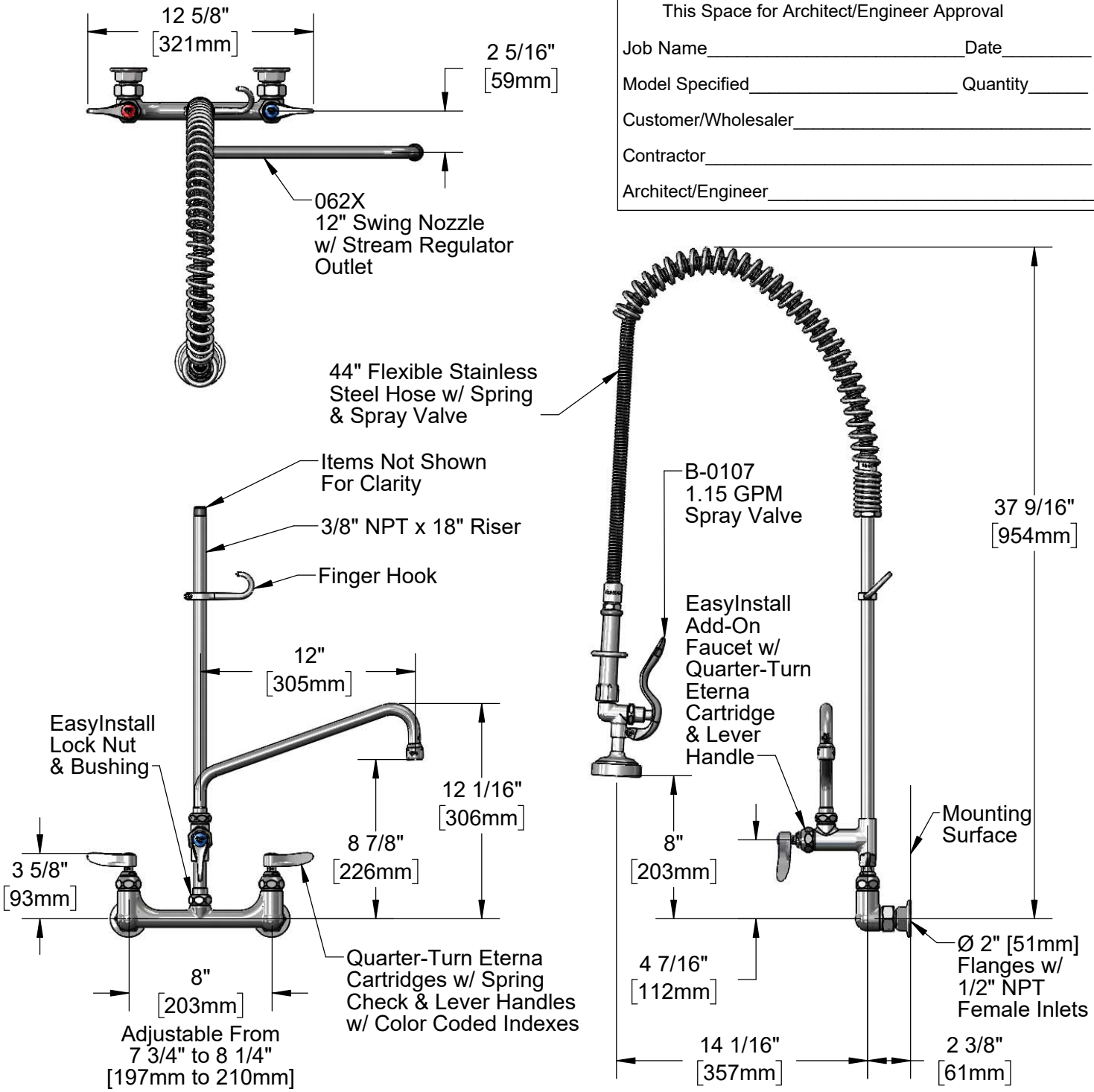

Product Specifications:

Pre-Rinse Unit: EasyInstall 8" Wall Mount Mixing Faucet, Quarter-Turn Eterna Cartridges w/ Spring Checks, Lever Handles, Add-On Faucet, 12" Swing Nozzle, 44" Flexible Stainless Steel Hose, 1.15 GPM Spray Valve & 1/2" NPT Female Inlets

Product Compliance:

ASME A112.18.1 / CSA B125.1
NSF 61 - Section 9
NSF 372 (Low Lead Content)
2019 DOE PRSV - Class II

Drawn: JRM	Checked: KJG	Approved: JHB	Date: 10/08/19	Scale: 1:8	Sheet: 1 of 2

T&S BRASS AND BRONZE WORKS, INC.

2 Saddleback Cove / P.O. Box 1088
Travelers Rest, SC 29690

Travelers Rest, SC: 800-476-4103 • Simi Valley, CA: 800-423-0150 • Fax: 864-834-3518 • www.tsbrass.com

Model No.
B-0133-ADF12

Item No.

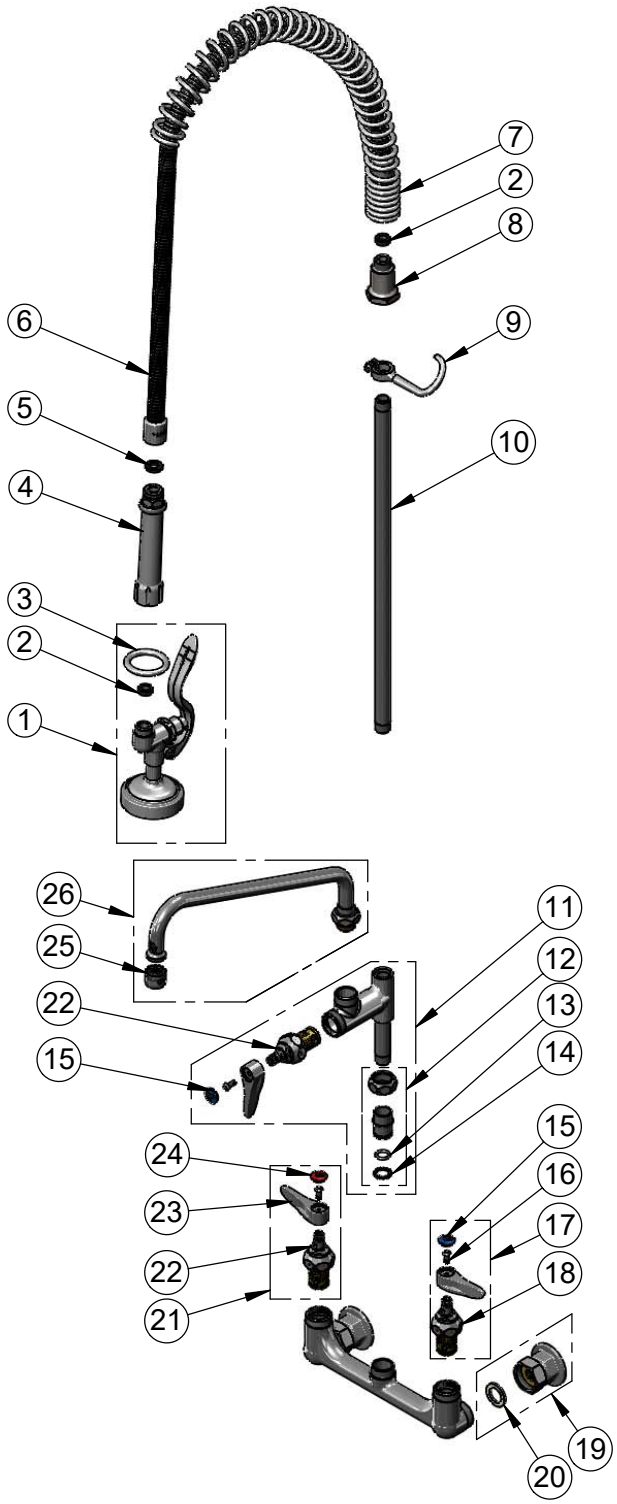

ITEM NO.	SALES NO.	DESCRIPTION
1	B-0107	1.15 GPM Spray Valve
2	010476-45	#27 Washer
3	000907-45	Spray Valve Hold Down Ring
4	002987-40	Grip Handle
5	001014-45	Washer, B-0100 Hose Barrel
6	B-0044-H2A	44" Flexible Stainless Steel Hose, Less Handle
7	000888-45	EasyInstall Overhead Spring
8	000821-40	Spring Body
9	004R	Finger Hook
10	000369-40	3/8" NPT x 18" Riser
11	B-0155-LNEZ	Add-On Faucet w/ Quarter-Turn Eterna Cartridge, RTC & Lever Handle (Less Nozzle)
12	EZ-K	EasyInstall Kit: Nut, Bushing, O-ring & Lock Washer
13	001065-45	O-Ring
14	014200-45	Star Washer, Anti-Rotation
15	018506-19NS	Blue Button Index, Press-in
16	000925-45	Lab Handle Screw
17	002711-40NS	Quarter-Turn Eterna Cartridge, LTC w/ Spring Check, Handle, Index & Screw
18	012442-40NS	Quarter-Turn Eterna Cartridge, LTC w/ Spring Check
19	00AA	1/2" NPT Female Eccentric Flange
20	001019-45	Coupling Nut Washer
21	002712-40NS	Quarter-Turn Eterna Cartridge, RTC w/ Spring Check, Handle, Index & Screw
22	012443-40NS	Quarter-Turn Eterna Cartridge, RTC w/ Spring Check
23	001638-45NS	Lever Handle (New Style)
24	001193-19NS	Red Button Index, Press-in
25	B-PT	Full Flow Stream Regulator, 55/64-27
26	062X	12" Swing Nozzle w/ Stream Regulator Outlet

Product Specifications:
Pre-Rinse Unit: EasyInstall 8" Wall Mount Mixing Faucet, Quarter-Turn Eterna Cartridges w/ Spring Checks, Lever Handles, Add-On Faucet, 12" Swing Nozzle, 44" Flexible Stainless Steel Hose, 1.15 GPM Spray Valve & 1/2" NPT Female Inlets

Product Compliance:
ASME A112.18.1 / CSA B125.1
NSF 61 - Section 9
NSF 372 (Low Lead Content)
2019 DOE PRSV - Class II

Drawn: JRM	Checked: KJG	Approved: JHB	Date: 10/08/19	Scale: NTS	Sheet: 2 of 2

T&S BRASS AND BRONZE WORKS, INC.

2 Saddleback Cove / P.O. Box 1088
Travelers Rest, SC 29690

Travelers Rest, SC: 800-476-4103 • Simi Valley, CA: 800-423-0150 • Fax: 864-834-3518 • www.tsbrass.com

Model No.
B-0109-01

Item No.

This Space for Architect/Engineer Approval

Job Name_____Date_____

Model Specified_____ Quantity_____

Customer/Wholesaler_____

Contractor_____

Architect/Engineer_____

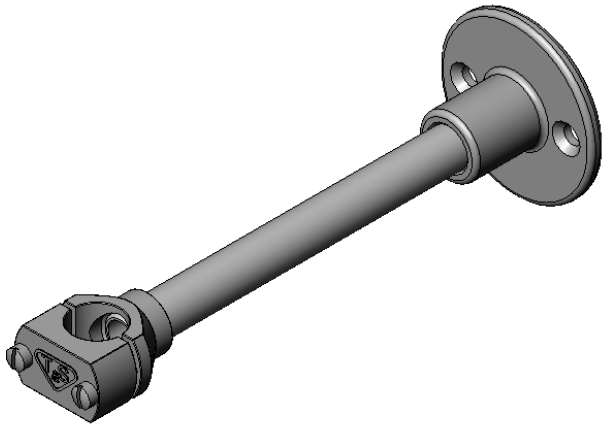

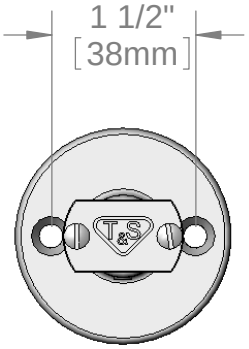

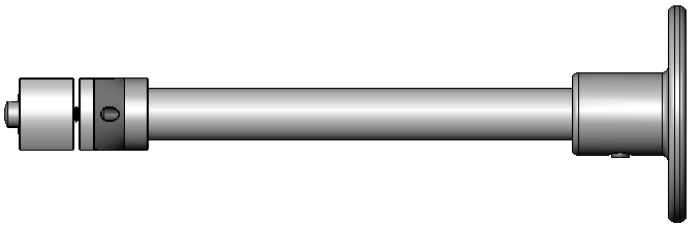

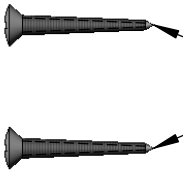

Chrome Plated Brass Wood Screws
for Wall Mounting (Included)

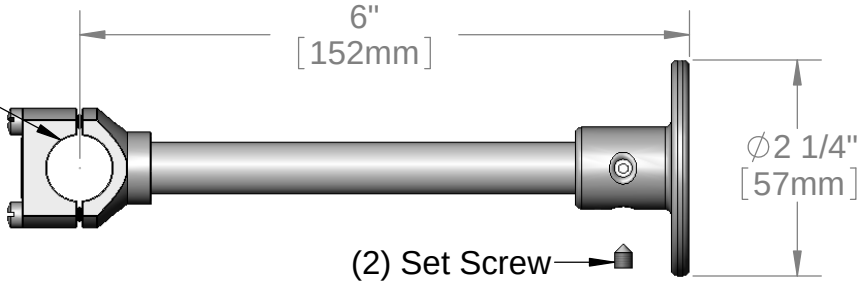

Product Specifications:
6" Wall Bracket Assembly for 3/8" Pipe
w/ Mounting Hardware

Drawn	Checked	Approved
JRM	KJG	JHB
Scale: 1:2		Date: 06/02/14

Sheet: 1 of 1

STAINLESS STEEL

STANDARD HAND SINKS

Conforms To NSF 61/9 Lead Free Requirements

SPLASH MOUNTED FAUCETS

7-PS-60

7-PS-68

7-PS-50

7-PS-54

7-PS-67

DECK MOUNTED FAUCET

7-PS-20

7-PS-20-NF
Faucet omitted

SINGLE HOLE PUNCH

Faucet omitted

7-PS-71

DOUBLE HOLE PUNCH

Faucet omitted

7-PS-70

LARGE SINK BOWLS

Features Large Size Sink Bowl 16” x 20” x 8”

7-PS-45

Features Large Size Sink Bowl 16” x 14” x 8”

7-PS-49

Item #: _____ **Qty #:** _____

Model #: _____

Project #: _____

FEATURES:

One piece **Deep Drawn** sink bowl design.

Sink bowl size is 10” x 14” x 5”.

7-PS-45 sink bowl size is 16” x 20” x 8”.

7-PS-49 sink bowl size is 16” x 14” x 8”.

All sink bowls have a large liberal radii with a minimum dimension of 2” and are rectangular in design for increased capacity.

Stainless steel 3 1/2” basket drain with 1-1/2” IPS.

Additional Features:

7-PS-20	K-22 4” O.C. deck mounted centerset faucet.
7-PS-20-NF	Deck mounted faucet omitted. Two 4” O.C. holes.
7-PS-45	K-59 4” O.C. splash mounted faucet and 2 Stainless Steel Support Brackets. (Hardware Included).
7-PS-49	K-59 4” O.C. splash mounted faucet and 2 Stainless Steel Support Brackets. (Hardware Included).
7-PS-50	K-59 4” O.C. splash mounted gooseneck faucet. Lever operated drain and built-in overflow with plastic overflow tube and spring clamps. 1-1/2” P-Trap.
7-PS-54	K-59 4” O.C. splash mounted gooseneck faucet. 1-1/2” P-Trap.
7-PS-60	K-59 4” O.C. splash mounted gooseneck faucet.
7-PS-67	K-59 4” O.C. splash mounted gooseneck faucet and lever operated drain.
7-PS-68	K-59 4” O.C. splash mounted gooseneck faucet with Wrist Handles.
7-PS-70	Splash mounted faucet omitted. Two 4” O.C. holes.
7-PS-71	Splash mounted faucet omitted. Single center hole.

CONSTRUCTION:

All TIG welded.

Welded areas blended to match adjacent surfaces and to a satin finish.

Die formed Countertop Edge with a No-Drip offset.

One sheet of stainless steel - No Seams.

MATERIAL:

Heavy gauge type 304 series stainless steel.

Wall mounting bracket is Galvanized and of offset design.

All fittings are brass / chrome plated unless otherwise indicated.

MECHANICAL:

Faucet supply is 1/2” IPS male thread hot and cold.

Faucet Flow Rate: 1.0 GPM/3.8 LPM aerator. 60 PSI.

⚠ WARNING:

Equipment that includes a faucet may expose you to chemicals, including lead, that are known to the State of California to cause cancer or birth defects or other reproductive harm. For more Info.,visit www.p65warnings.ca.gov.

Customer Service Available To Assist You 1-800-645-3166 8:30 am - 7:00 pm E.S.T.

For Orders & Customer Service:
Email: customer@advancetabco.com or Fax: 631-242-6900

For Smart Fabrication™ Quotes:
Email: smartfab@advancetabco.com or Fax: 631-586-2933

www.advancetabco.com

REF-B

DIMENSIONS and SPECIFICATIONS

TOL Overall: ± .500" Interior: ± .250" **FITTINGS SUPPLIED AS SHOWN** **ALL DIMENSIONS ARE TYPICAL**

7-PS-20

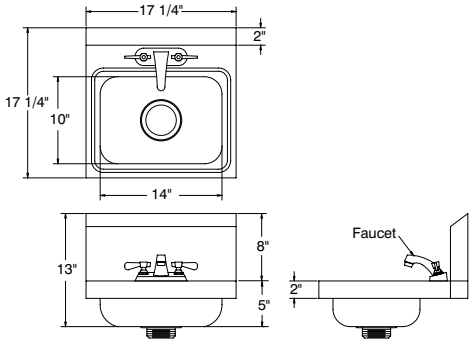

15 lbs.

7-PS-67

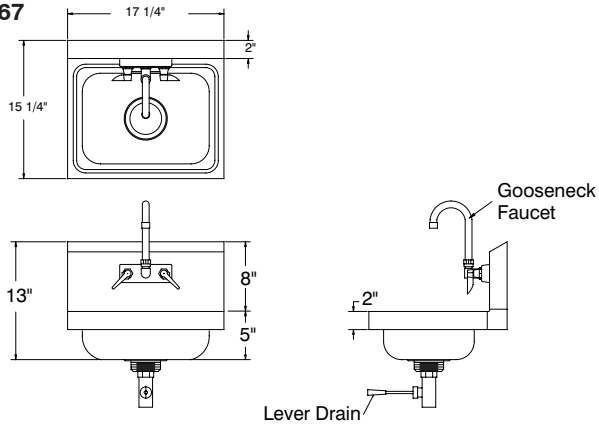

15 lbs.

7-PS-45

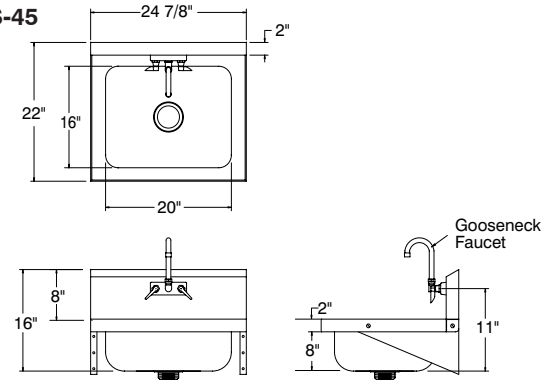

31 lbs.

7-PS-49

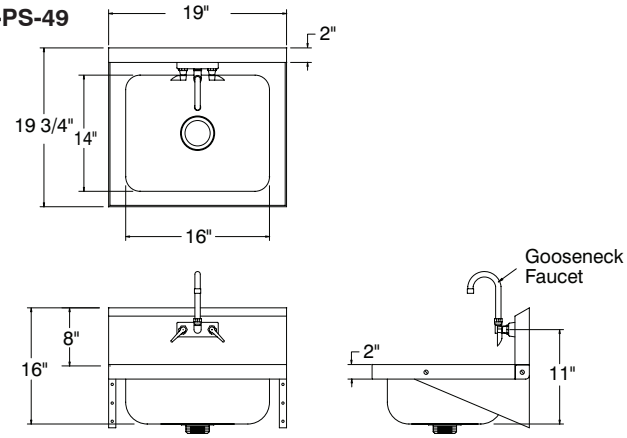

31 lbs.

TOP VIEW FOR:
7-PS-50
7-PS-54
7-PS-60
7-PS-68
7-PS-70

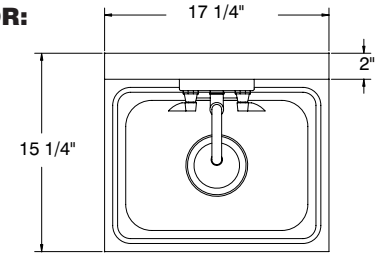

Sink Bowl 10" x 14" x 5"

7-PS-50 & 7-PS-54*
NOTE: *7-PS-54 Hand Sink <u>Excludes</u> Lever Drain and Overflow

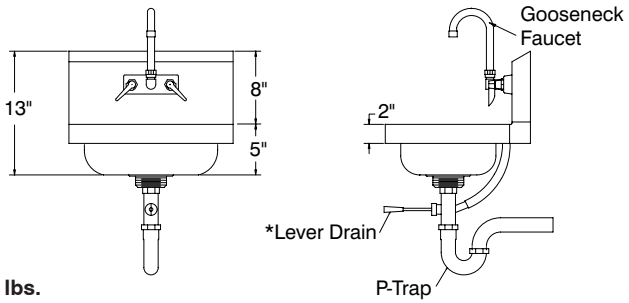

15 lbs.

7-PS-60

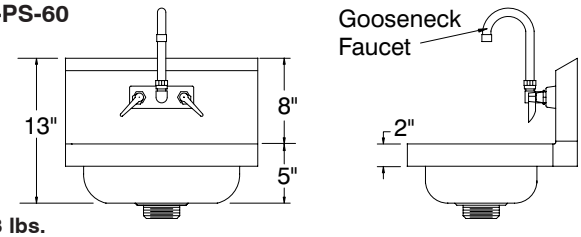

13 lbs.

7-PS-68

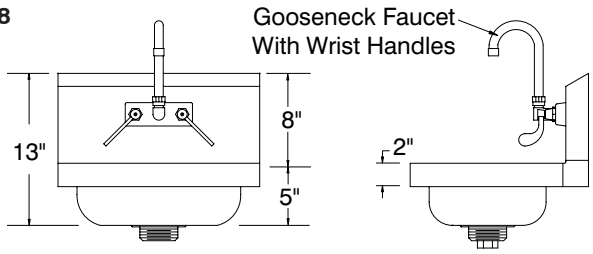

13 lbs.

7-PS-71

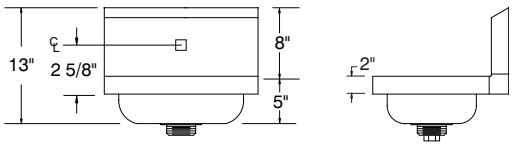

7-PS-70

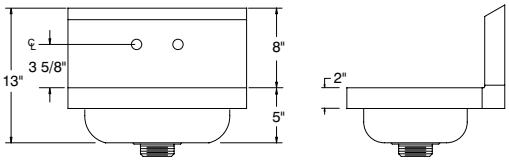

12 lbs.

ADVANCE TABCO
SMART FABRICATION™

REF-B 325 Wireless Boulevard, Hauppauge, NY 11788

ADVANCE TABCO is constantly engaged in a program of improving our products. Therefore, we reserve the right to change specifications without prior notice.

© ADVANCE TABCO, MARCH 2024

FAUCET PARTS & ACCESSORIES

Faucet Repair Kit
For K-22, K-59, K-123, K-125, K-126, K-206 & K-316 Faucets
Includes 2 Cartridges and Handles
*Can Only Be Used On Faucets Purchased After January 2016. For Older Faucets, Consult Customer Service.
K-00A (Set of 2)

Faucet Repair Kit
For K-1, K-11, K-50, K-51, K-52, K-53, K-56, K-124, K-101, K-160, K-208 & K-240 Faucets
Includes 2 Cartridges and Handles
*Can Only Be Used On Faucets Purchased After January 2016. For Older Faucets, Consult Customer Service.
K-00B (Set of 2)

Service Faucet Vacuum Breaker Repair Kit
For K-240 Faucet
*Can Only Be Used On Faucets Purchased After January 2016. For Older Faucets, Consult Customer Service.
K-03

K-02 Filler Faucet Repair Kit
For K-54 & K-54A Faucets
*Can Only Be Used On Faucets Purchased From 2016 - 2019. For Older Faucets, See Below.

K-02A Filler Faucet Repair Kit
For K-54 & K-54A Faucets
*Can Only Be Used On Faucets Purchased Before January 2016 or After 2019.

Pedal/Knee Valve Replacement Parts

Replacement Bonnet for Pedal/Knee Valve
For K-103, K-104, 7-PS-32 & 7-PS-39
K-01

Replacement Check Valves
For K-103, K-104, 7-PS-32 & 7-PS-39
K-19

Thermostatic Mixing Valve
For K-103, K-104, 7-PS-32 & 7-PS-39
K-425

Mixing Valve & Retainer
For K-103, K-104, 7-PS-32 & 7-PS-39
K-19A

Faucet Options & Accessories

Hands-Free Wand

K-400

Low Flow Aerator

.5 GPM

K-08

Wrist Handles (Pair)

*Can Only Be Used On Faucets Purchased After January 2016. For Older Faucets, Consult Customer Service.

K-316-LU

Wrist Handles (Pair)
For Heavy Duty 8" O.C. Faucets

K-416-LU

Splash Mount Faucet Mounting Kit
K-1, K-11, K-101, K-105, K-112, K-119 & K-211

K-06

Faucet Wall Mounting Bracket
8" O.C.
K-30

ADVANCE TABCO
SMART FABRICATION™
www.advancetabco.com

Customer Service Available To Assist You 1-800-645-3166 8:30 am - 7:00 pm E.S.T.

For Orders & Customer Service:
Email: customer@advancetabco.com or **Fax:** 631-242-6900

For Smart Fabrication™ Quotes:
Email: smartfab@advancetabco.com or **Fax:** 631-586-2933

ADVANCE TABCO is constantly engaged in a program of improving our products. Therefore, we reserve the right to change specifications without prior notice. © ADVANCE TABCO, DEC. 2019 REF-G

16 GAUGE 300 SERIES STAINLESS STEEL

HAND SINK SIDE SPLASHES

WELDED & BOLT-ON

Item #: _____ **Qty #:** _____

Model #: _____

Project #: _____

FEATURES:

Shields surround work area from splashes and prevents cross-contamination.

Available as 7-3/4" and 12" high.

Welded Side Splashes

Available as 7-3/4", 12" & 24" high.

Factory installed only.

Bolt-on Single Panel Side Splash

Available as 7-3/4" and 12" high.

Includes holes only. Hardware not included.

CONSTRUCTION:

Welded Side Splashes (factory installed) are spot welded and polished to a satin finish.

Bolt-on Side Splashes (field installation) require drilling holes in hand sink to match holes in side splash. Mounting hardware is not included.

24" Side Splashes With Included Back Panel Shown
Factory Installed Only

Single Sided 7-3/4" Side Splash Shown
Factory Installed Only

Double Sided Bolt-On 7-3/4" Side Splashes Shown
Hardware Not Included

WELDED

	One Side Splash			Two Side Splashes				
	Model #	Approx. Weight	Approx. Cu. Ft.	Model #	Approx. Weight	Approx. Cu. Ft.	O.A. Splash Size W x H	Description
7-3/4" High Welded Side Splashes	**7-PS-16**	5 lbs.	1	**7-PS-17**	12 lbs.	1	15-1/4" x 9-3/4"	For 10" x 14" Bowls w/ Splash Mt. Faucets
	7-PS-16A	5 lbs.	1	**7-PS-17A**	12 lbs.	1	16-1/8" x 9-3/4"	For 9" x 9" Bowls
	7-PS-16B	5 lbs.	1	**7-PS-17B**	13 lbs.	1	17-1/8" x 9-3/4"	For 10" x 14" Bowls w/ Deck Mt. Faucets
	7-PS-16C	7 lbs.	1	**7-PS-17C**	15 lbs.	1	21-3/4" x 9-3/4"	For 16" x 20" Bowls
	7-PS-16D	8 lbs.	1	**7-PS-17D**	16 lbs.	1	23-3/8" x 9-3/4"	For Handicapped Hand Sinks
	7-PS-16E	6 lbs.	1	**7-PS-17E**	14 lbs.	1	19-5/8" x 9-3/4"	For 14" (F/B) x 16" Bowls
	7-PS-16F	6 lbs.	1	**7-PS-17F**	14 lbs.	1	21-1/8" x 9-3/4"	For 16" (F/B) x 14" Bowls
12" High Welded Side Splashes	**7-PS-11**	6 lbs.	1	**7-PS-15**	14 lbs.	1	15-1/4" x 14"	For 10" x 14" Bowls w/ Splash Mt. Faucets
	7-PS-11A	6 lbs.	1	**7-PS-15A**	14 lbs.	1	16-1/8" x 14"	For 9" x 9" Bowls
	7-PS-11B	6 lbs.	1	**7-PS-15B**	14 lbs.	1	17-1/8" x 14"	For 10" x 14" Bowls w/ Deck Mt. Faucets
	7-PS-11C	8 lbs.	1	**7-PS-15C**	18 lbs.	1	21-3/4" x 14"	For 16" x 20" Bowls
	7-PS-11D	9 lbs.	1	**7-PS-15D**	20 lbs.	1	23-3/8" x 14"	For Handicapped Hand Sinks
	7-PS-11E	7 lbs.	1	**7-PS-15E**	16 lbs.	1	19-5/8" x 14"	For 14" (F/B) x 16" Bowls
	7-PS-11F	8 lbs.	1	**7-PS-15F**	18 lbs.	1	21-1/8" x 14"	For 16" (F/B) x 14" Bowls
24" High Welded Side Splashes	**NOTE:** 24" High Side Splashes Include A Rear Panel That Matches The Height Of The Side Panels. (Only Available As Two Side Design, Single Side Not Offered)			**7-PS-28**	28 lbs.	1	15-1/4" x 26"	For 10" x 14" Bowls w/ Splash Mt. Faucets
				7-PS-28A	28 lbs.	1	16-1/8" x 26"	For 9" x 9" Bowls
				7-PS-28B	28 lbs.	1	17-1/8" x 26"	For 10" x 14" Bowls w/ Deck Mt. Faucets
				7-PS-28C	36 lbs.	1	21-3/4" x 26"	For 16" x 20" Bowls
				7-PS-28D	40 lbs.	1	23-3/8" x 26"	For Handicapped Hand Sinks
				7-PS-28E	32 lbs.	1	19-5/8" x 26"	For 14" (F/B) x 16" Bowls
				7-PS-28F	36 lbs.	1	21-1/8" x 26"	For 16" (F/B) x 14" Bowls

BOLT-ON Hardware Not Included

7-3/4" High				12" High				
Model #	O.A. Splash Size W x H	Approx. Weight	Approx. Cu. Ft.	Model #	O.A. Splash Size W x H	Approx. Weight	Approx. Cu. Ft.	Description
7-PS-27	15-1/4" x 10"	5 lbs.	1	**7-PS-13**	15-1/4" x 14"	6 lbs.	1	For 10" x 14" Bowls w/ Splash Mt. Faucets
7-PS-27A	16-1/8" x 10"	6 lbs.	1	**7-PS-13A**	16-1/8" x 14"	7 lbs.	1	For 9" x 9" Bowls
7-PS-27B	17-1/8" x 10"	6 lbs.	1	**7-PS-13B**	17-1/8" x 14"	7 lbs.	1	For 10" x 14" Bowls w/ Deck Mt. Faucets
7-PS-27C	21-3/4" x 10"	6 lbs.	1	**7-PS-13C**	21-3/4" x 14"	7 lbs.	1	For 16" x 20" Bowls
7-PS-27D	23-3/8" x 10"	7 lbs.	1	**7-PS-13D**	23-3/8" x 14"	8 lbs.	1	For Handicapped Hand Sinks
7-PS-27E	19-5/8" x 10"	7 lbs.	1	**7-PS-13E**	19-5/8" x 14"	8 lbs.	1	For 14" (F/B) x 16" Bowls
7-PS-27F	21-1/8" x 10"	7 lbs.	1	**7-PS-13F**	21-1/8" x 14"	8 lbs.	1	For 16" (F/B) x 14" Bowls

Customer Service Available To Assist You 1-800-645-3166 8:30 am - 7:00 pm E.S.T.

For Orders & Customer Service:
Email: customer@advancetabco.com or Fax: 631-242-6900

For Smart Fabrication™ Quotes:
Email: smartfab@advancetabco.com or Fax: 631-586-2933

www.advancetabco.com

REF-B

DIMENSIONS and SPECIFICATIONS

TOL ± .500”

ALL DIMENSIONS ARE TYPICAL

BOLT-ON SIDE SPLASHES (Hardware Not Included)

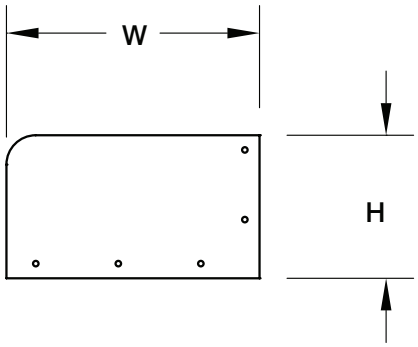

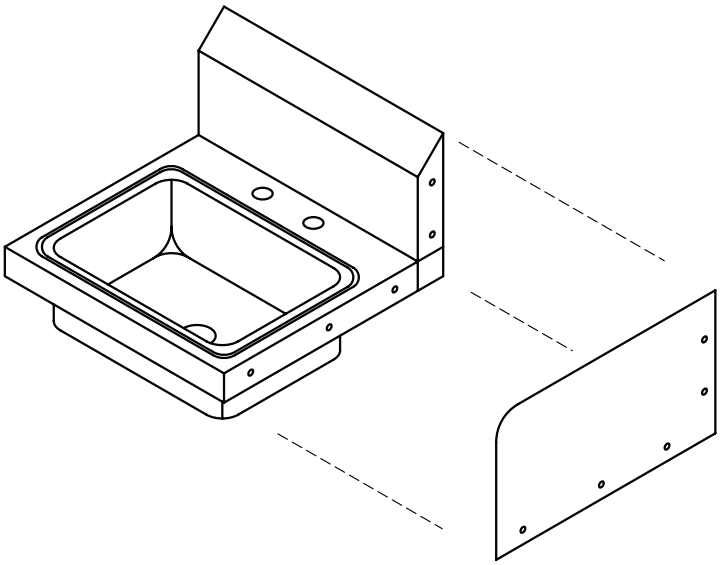

WELDED SIDE SPLASHES (Factory Installed Only)

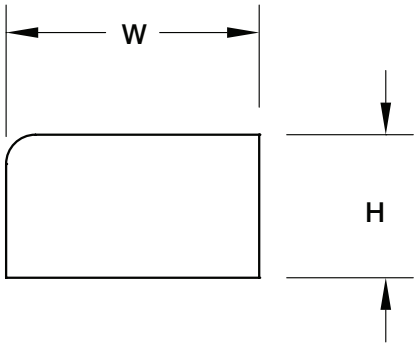

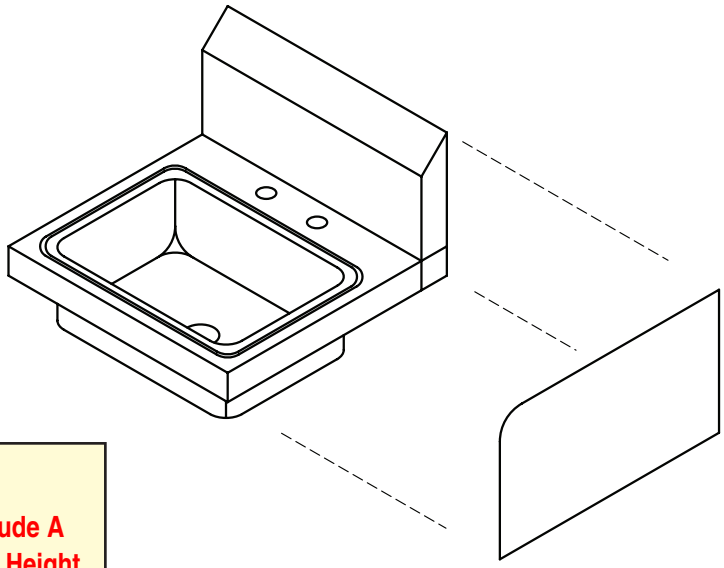

NOTE:

24” High Side Splashes Include A Rear Panel That Matches The Height Of The Side Panels And Is To Be Secured To The Rear Wall.

Rear Panel Mounting Holes Are Provided. (Hardware Not Included).

ADVANCE TABCO SMART FABRICATION™

REF-B 325 Wireless Boulevard, Hauppauge, NY 11788

ADVANCE TABCO is constantly engaged in a program of improving our products. Therefore, we reserve the right to change specifications without prior notice.

© ADVANCE TABCO, APRIL 2020

ACCESSORIES - EXPLODED VIEW
Model: 7-PS-12

Dispenser holds 600 ML (20 ounces) of liquid soap.

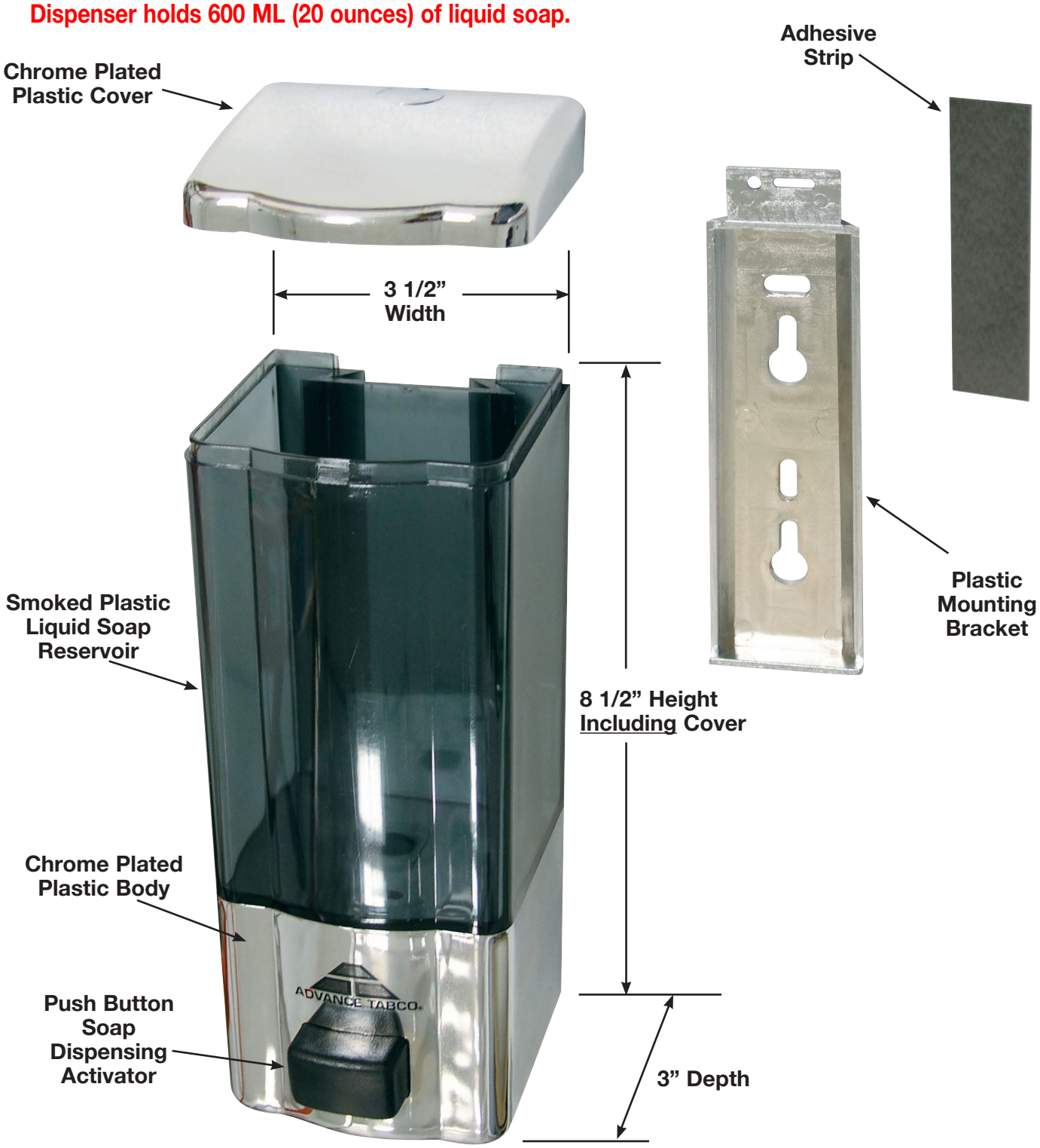

ADVANCE TABCO SMART FABRICATION™
www.advancetabco.com

Customer Service Available To Assist You 1-800-645-3166 8:30 am - 7:00 pm E.S.T.
Email Orders To: customer@advancetabco.com. For Smart Fabrication™ Quotes, Email To: smartfab@advancetabco.com or Fax To: 631-586-2933

NEW YORK	GEORGIA	TEXAS	NEVADA
Fax: (631) 242-6900	Fax: (770) 775-5625	Fax: (972) 932-4795	Fax: (775) 972-1578

ADVANCE TABCO is constantly engaged in a program of improving our products. Therefore, we reserve the right to change specifications without prior notice. © ADVANCE TABCO, DEC. 2019

Manitowoc®

INDIGO® NXT

iT0450 Ice Cube Machine

iT0450 Ice Cube Machine

Models

☐ IDT0450A ☐ IYT0450A ☐ IDT0450W ☐ IYT0450W

ENERGY STAR

Indigo NXT Series iT0450
Ice Machine on D400 Bin

Designed for operators who know that ice is critical to their business, the Indigo NXT Series ice machine's preventative diagnostics continually monitor itself for reliable ice production. Improvements in cleanability and programmability make your ice machine easy to own and less expensive to operate.

- **New levels of Performance** – Showcasing an average of 9% lower energy consumption, up to 12% increase in ice production and a 19% reduction in condenser water usage and a 5% reduction in potable water usage. . This translates into lower cost of ownership over the life of your machine.
- **easyTouch® Display** - New icon based touch screen takes the guess work out of owning and operating an ice machine.
- **Programmable Ice Production** – Now its super easy to program your ice machine to be off at certain times of the day to save money with fluctuating electrical rates. Also programmable by daily ice production volume and night time programming..
- **Easy to Clean Foodzone** – Hinge front door swing out for easy access. Removable water-trough, distribution tube, curtain, water probe and water pump for fast and efficient cleaning. Selected components are made with AlphaSan® antimicrobial.
- **Intelligent Diagnostics** – Provides 24 hour preventative maintenance and diagnostic feedback for trouble free operation.
- **Acoustical Ice Sensing Probe** – Unique patented technology allows for reliable operation in challenging water conditions and environments
- **DuraTech® Exterior** – Provides superior corrosion resistant above stainless steel. Innovative clear-coat resists fingerprints and dirt making it easier to keep clean.
- Available **LuminIce® II Virus and Bacteria Inhibitor** – Controls viruses, bacteria, and yeast within the food zone to keep the ice machine cleaner longer. A new sanitation icon lets you know the operational status.
- **Active Sense-** insures consistent ice harvest in all environmental conditions. This software works in con junction with the acoustical ice sensing probe improving reliability and performance.

COMMERCIAL WARRANTY

ICE MAKER	EVAPORATOR	COMPRESSOR
3 YEAR PARTS AND LABOR	5 YEAR	5 YEAR PARTS 3 YEAR LABOR

Ice Machine Electric

115/60/1 standard
(208-230/60/1also available)

Minimum circuit ampacity:
Air-cooled: 115v : 11.9, 208-230v : 5.6
Water-cooled: 115v : 11.2, 208-230v : 5.3

Maximum fuse size:
Air Cooled: 20 amps

Water cooled & 208-230 V: 15 amps

Specifications

BTU Per Hour:
3,800 (average),
and 6,000 (peak)

Refrigerant:
R410A CFS - Free
Lowers global warming by 48%

Operating Limits:

- Ambient Temperature Range:
  40 to 110 F (4.4 to 43.3 C)
  Water Temperature Range:
  40 to 90 F (4.4 to 32.2 C)
- Potable Water Pressure:
  Min. 20 psi (137.9 kPA)
  Max. 80 psi (551.1 kPA)
- Condenser Water Pressure:
  Min. 20 psi (137.9 kPA)
  Max. 276 psi (1902.95 kPA)

Ice Shape

Half Dice
⅜" x 1⅛" x ⅞"
(.95 x 2.86 x 2.22 cm)

Dice
⅞" x ⅞" x ⅞"
(2.22 x 2.22 x 2.22 cm)

CALIFORNIA LOW LEAD QUALIFIED Conforms to NSF 61 Annex G · ANSI CERTIFIED · NSF c UL US LISTED · CE · AQ · ISO 9001:2015

2110 South 26th Street
Manitowoc, WI 54220

Tel: 1.920.682.0161
Fax: 1.920.683.7589

www.manitowocice.com

Manitowoc®

Indigo® NXT™ iT0450 Ice Cube Machine

iT0450 on D-400 Storage Bin

Ⓐ Electrical Entrance (2) Options
Ⓑ 3/8" (0.95 cm) F.P.T. Water Condenser Inlet (water-cooled units)
Ⓒ 1/2" (1.27 cm) F.P.T. Water Condenser Outlet (water-cooled units)
Ⓓ 1/2" (1.27 cm) Auxillary Base Drain Socket
Ⓔ 3/8" (0.95 cm) F.P.T. Ice Making Water Inlet
Ⓕ 1/2" (1.27 cm) F.P.T. Ice Making Water Drain
Ⓖ 3/4" (1.91 cm) Bin Drain

Installation Note
Minimum installation clearance:
Top/side: 8" (30.50 cm)Back is 5" (12.7 cm)

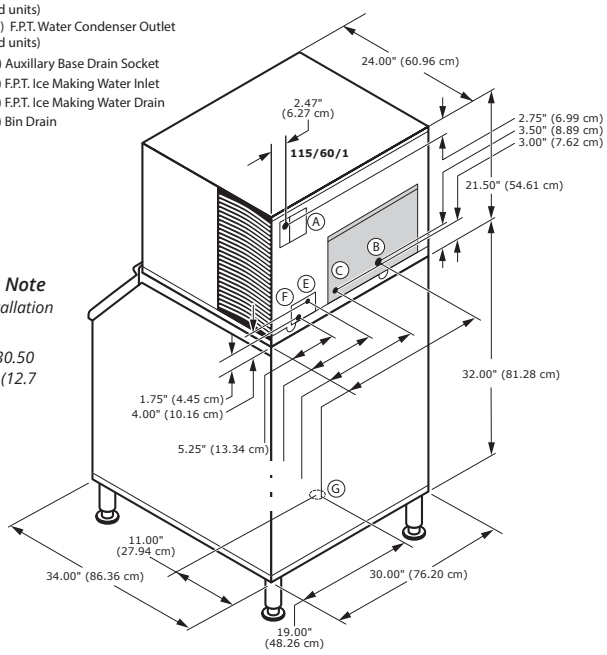

Space-Saving Design

	iT0450 D-400	iT0450 D-570
Height	59.50" 151.13 cm	71.50" 181.61 cm
Width	30.00" 76.2 cm	30.00" 76.2 cm
Depth	34.00" 86.30 cm	34.00" 86.30 cm
Bin Storage	365 lbs. 165.7 kgs.	532 lbs. 241.1 kgs.

Height includes adjustable bin legs 6.00" to 8.00", (15.24 to 20.32 cm) set at 6.00" (15.24 cm).
Bin capacity is based on 90% of the volume x 33 lbs/ft3 average density of ice.

Specifications

	Model	Ice Shape	Ice Production 24 Hours		Power Usage kWh/100 lbs. @90°Air/70°F	Potable Water Usage/100 lbs. 45.4 kgs. of Ice
			70°Air/ 50°F Water	90°Air/ 70°F Water	1 Ph	
AIR COOLED	IDT0450A	dice	470 lbs.	358 lbs.	5.63 ★	19 Gal.
			213 kgs	162 kgs		71.9 L
	IYT0450A	half-dice	490 lbs.	378 lbs.	5.52 ★	19 Gal.
			222 kgs	171 kgs		71.9 L
WATER COOLED	IDT0450W	dice	430 lbs.	360 lbs.	4.75	19 Gal.
			195 kgs	163 kgs		71.9 L
	IYT0450W	half-dice	470 lbs.	420 lbs.	4.20	19 Gal.
			213 kgs.	191 kgs		71.9 L
	* Water-cooled Condenser Water Usage / 100 lbs. /45.4 kgs. Of Ice: 140 gal/ 530 L. *Water-cooled models are excluded from ENERGY STAR qualification.					

Order separately: Ice storage bin for all units
★*ENERGY STAR® 3.0*

Accessories

LuminIce® II Virus and Bacteria Inhibitor
controls viruses and bacteria in the ice machine.

External Scoop holder
protect the ice scoop with the NSF approved versatile scoop holder.

Arctic Pure® Water Filters
reduces sediment and chlorine odors for better tasting ice.

iAuCS®
schedules and performs routine ice machine cleaning automatically.

Manitowoc Ice reserves the right to make changes to the design or specifications without prior notice.

2110 South 26th Street
Manitowoc, WI 54220

Tel: 1.920.682.0161
Fax: 1.920.683.7589

www.manitowocice.com
6478B 08/2022

Manitowoc

INDIGO NXT

50Hz
iT0450 Ice Cube Machine

Indigo® NXT™ iT0450 Ice Cube Machine

Models

☐ IDT0450A ☐ IYT0450A ☐ IDT0450W

Indigo NXT Series iT0450
Ice Machine on D400 Bin

Designed for operators who know that ice is critical to their business, the Indigo NXT Series ice machine's preventative diagnostics continually monitor itself for reliable ice production. Improvements in cleanability and programmability make your ice machine easy to own and less expensive to operate.

- **New levels of Performance** – Showcasing an average of 9% lower energy consumption, up to 12% increase in ice production and a 19% reduction in condenser water usage and a 5% reduction in potable water usage. . This translates into lower cost of ownership over the life of your machine.
- **easyTouch® Display** - New icon based touch screen takes the guess work out of owning and operating an ice machine.
- **Multiple Language Capability** - The easyTouch display is available in multiple languages selected in the initial start-up installation Wizard.
- **Programmable Ice Production** – Now its super easy to program your ice machine to be off at certain times of the day to save money with fluctuating electrical rates. Also programmable by daily ice production volume.
- **Easy to Clean Foodzone** – Hinge front door swing out for easy access. Removable water-trough, distribution tube, curtain, water probe and water pump for fast and efficient cleaning. Selected components are made with AlphaSan® antimicrobial.
- **Intelligent Diagnostics** – Provides 24 hour preventative maintenance and diagnostic feedback for trouble free operation.
- **Acoustical Ice Sensing Probe** – Unique patented technology allows for reliable operation in challenging water conditions and environments
- Available **LuminIce® II Growth Inhibitor** – Controls the growth of bacteria and yeast within the Food zone keeping the machine cleaner longer. A new indicator in the display keeps you abreast of the operational status.

Ice Machine Electric

230/ 50/ 1

Minimum circuit ampacity:
Air-cooled: 5.6 amps
Water-cooled: 5.3 amps

Maximum fuse size:
Air Cooled: 15 amps

Water cooled 15 amps

Specifications

BTU Per Hour:
3,800 (average),
and 6,000 (peak)

Refrigerant:
R410A CFS - Free
Lowers global warming
by 48%

Operating Limits:

- Ambient Temperature Range:
  40˚ to 110˚F (4.4˚ to 43.3˚C)
  Water Temperature Range:
  40˚ to 90˚F (4.4˚ to 32.2˚C)
- Water Pressure Ice Maker
  Water In:
  Min. 20 psi (137.9 kPA)
  Max. 80 psi (551.1 kPA)
- Condenser Water Pressure:
  Min. 20 psi (137.9 kPA)
  Max. 276 psi (1902.95 kPA)

Ice Shape

Half Dice
⅜" x 1⅛" x ⅞"
(.95 x 2.86 x 2.22 cm)
Cube weight 5.7 g

Dice
⅞" x ⅞" x ⅞"
(2.22 x 2.22 x 2.22 cm)
Cube weight 8.5 g

Welbilt Deutschland GmbH
Auf der Weih 11
D - 35745 Herborn, Germany
Tel.: +49 27 72 58 050
welbilt.com.de

Welbilt Iberia, S.A.U
Textil, 6 – Pol.Ind. La Ferreria – 08110
Montcada i Reixac
Barcelona, Spain
Tel.: +34 902 20 10 69
welbilt.com.es

Welbilt UK
Ashbourne HouseThe Guildway,
Old Portsmouth RdGuildford GU3
1LRUnited KingdomTel.:
+44 1483 464900
www.welbilt.uk

Manitowoc®

50Hz

Indigo® NXT™ iT0450 Ice Cube Machine

iT0450 on D-400 Storage Bin

Ⓐ Electrical Entrance (2) Options
Ⓑ 3/8" (0.95 cm) F.P.T. Water Condenser Inlet (water-cooled units)
Ⓒ 1/2" (1.27 cm) F.P.T. Water Condenser Outlet (water-cooled units)
Ⓓ 1/2" (1.27 cm) Auxillary Base Drain Socket
Ⓔ 3/8" (0.95 cm) F.P.T. Ice Making Water Inlet
Ⓕ 1/2" (1.27 cm) F.P.T. Ice Making Water Drain
Ⓖ 3/4" (1.91 cm) Bin Drain

Installation Note
Minimum installation clearance:

Top/side: 12" (30.50 cm)Back is 5" (12.7 cm)

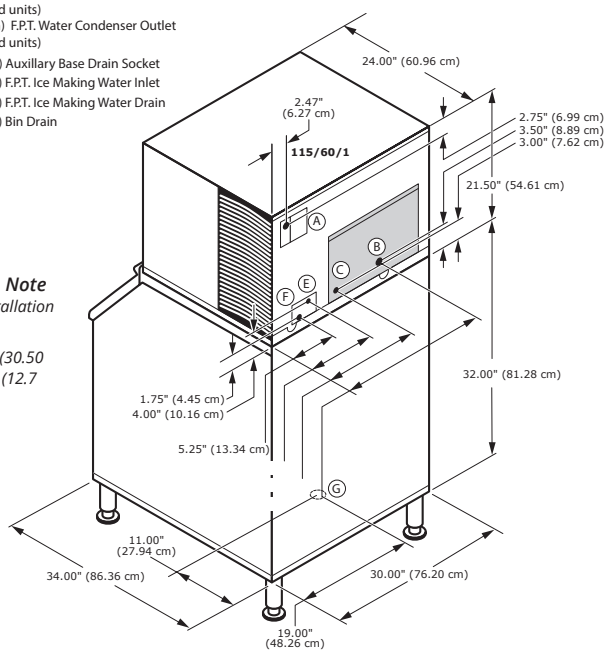

Space-Saving Design

	iT0450 D-400	iT0450 D-570
Height	59.50" 151.13 cm	71.50" 181.61 cm
Width	30.00" 76.2 cm	30.00" 76.2 cm
Depth	34.00" 86.30 cm	34.00" 86.30 cm
Bin Storage	365 lbs. 165.7 kgs.	543 lbs. 241.1 kgs.

Height includes adjustable bin legs 6.00" to 8.00", (15.24 to 20.32 cm) set at 6.00" (15.24 cm).
Bin capacity is based on 90% of the volume x 33 lbs/ft3 average density of ice.

Specifications

	Model	Ice Shape	Ice Production 24 Hours: 21°Air /10°C Water 70°Air/ 50°F Water	Ice Production 24 Hours: 32°Air / 21°C Water 90°Air/ 70°F Water	Power Usage kWh 45.4 kg / 100 lbs @ 32°Air / 21°C Water 90°Air / 70°F Water: 1 Ph	Potable Water Usage/100 lbs. 45.4 kgs. of Ice
AIR COOLED	IDT0450A	dice	440 lbs.	355 lbs.	5.30	19 Gal.
			200 kgs	161 kgs		71.9 L
	IYT0450A	half-dice	460 lbs.	375 lbs.	5.20	19 Gal.
			209 kgs	170 kgs		71.9 L
WATER COOLED	IDT0450W	dice	420 lbs.	355 lbs.	4.88	19 Gal.
			191 kgs	161 kgs		71.9 L
	* Water-cooled Condenser Water Usage / 100 lbs. /45.4 kgs. Of Ice: 140 gal/ 530 L.					

Order separately: Ice storage bin for all units
This product is hermetically sealed and contains fluorinated greenhouse gas R410A

Accessories

LuminIce® II Growth Inhibitor
reduces yeast and bacteria growth for a cleaner ice machine.

External Scoop holder
Protect the ice scoop with the NSF approved versatile scoop holder.

Arctic Pure® Plus Water Filters
reduce sediments and chlorine contaminants down to .5 microns. Use with a Pre-filter is recommended.

6645B_50Hz_06/22

Manitowoc Ice reserves the right to make changes to the design or specifications without prior notice.

Welbilt Deutschland GmbH
Auf der Weih 11
D - 35745 Herborn, Germany
Tel.: +49 27 72 58 050
welbilt.com.de

Welbilt Iberia, S.A.U
Textil, 6 – Pol.Ind. La Ferreria – 08110
Montcada i Reixac
Barcelona, Spain
Tel.: +34 902 20 10 69
welbilt.com.es

Welbilt UK
Ashbourne HouseThe Guildway,
Old Portsmouth RdGuildford GU3
1LRUnited KingdomTel.:
+44 1483 464900
www.welbilt.uk

Manitowoc

ICE MACHINE WARRANTY

Manitowoc Ice, Inc. (hereinafter referred to as the "COMPANY") warrants for a period of thirty-six months from the installation date (except as limited below) that new ice machines manufactured by the COMPANY shall be free of defects in material or workmanship under normal and proper use and maintenance as specified by the COMPANY and upon proper installation and start-up in accordance with the instruction manual supplied with the ice machine. The COMPANY'S warranty hereunder with respect to the compressor shall apply for an additional twenty-four months, excluding all labor charges, and with respect to the evaporator for an additional twenty-four months, including labor charges.

The obligation of the COMPANY under this warranty is limited to the repair or replacement of parts, components, or assemblies that in the opinion of the COMPANY are defective. This warranty is further limited to the cost of parts, components or assemblies and standard straight time labor charges at the servicing location.

Time and hourly rate schedules, as published from time to time by the COMPANY, apply to all service procedures. Additional expenses including without limitation, travel time, overtime premium, material cost, accessing or removal of the ice machine, or shipping are the responsibility of the owner, along with all maintenance, adjustments, cleaning, and ice purchases. Labor covered under this warranty must be performed by a COMPANY Contracted Service Representative or a refrigeration service agency as qualified and authorized by the COMPANY'S local Distributor. The COMPANY'S liability under this warranty shall in no event be greater than the actual purchase price paid by customer for the ice machine.

The foregoing warranty shall not apply to (1) any part or assembly that has been altered, modified, or changed; (2) any part or assembly that has been subjected to misuse, abuse, neglect, or accidents; (3) any ice machine that has been installed and/or maintained inconsistent with the technical instructions provided by the COMPANY; or (4) any ice machine initially installed more than five years from the serial number production date. This warranty shall not apply if the Ice Machine's refrigeration system is modified with a condenser, heat reclaim device, or parts and assemblies other than those manufactured by the COMPANY, unless the COMPANY approves these modifications for specific locations in writing.

THIS WARRANTY IS IN LIEU OF ALL OTHER WARRANTIES OR GUARANTEES OF ANY KIND, EXPRESSED OR IMPLIED, INCLUDING ANY IMPLIED WARRANTY OF MERCHANTABILITY OR FITNESS FOR A PARTICULAR PURPOSE.

In no event shall the COMPANY be liable for any special, indirect, incidental or consequential damages. Upon the expiration of the warranty period, the COMPANY'S liability under this warranty shall terminate.

The foregoing warranty shall constitute the sole liability of the COMPANY and the exclusive remedy of the customer or user. To secure prompt and continuing warranty service, the warranty registration card or register on line within five (5) days from the installation date.

MANITOWOC ICE, INC.
2110 So. 26th St., P.O. Box 1720, Manitowoc, WI 54221-1720
Telephone: 920-682-0161 • Fax: 920-683-7585
Web Site - www.manitowocice.com
Form 80-0373-3 Rev. 01/02

Manitowoc

Arctic Pure Plus

Premium Water Filters for Ice Machines

arctic pure+

Arctic Pure Plus
Premium Water Filters for Ice Machines

Models

☐ AR-PRE-P ☐ AR-10000-P ☐ AR-20000-P ☐ AR-40000-P

AR-PRE-P

- Pre-filter, removes hard sediments, sand, dirt and rust from water, and protects solenoids, valves and inlets to the ice maker
- Compatible with **all** models

AR-10000-P

- Chlorine Reduction
- SLOW PHOS scale inhibitor
- 0.5 Microns filtration
- 15,000 gallon capacity
- Models 0-600 lbs/day

AR-20000-P

- Chlorine Reduction
- SLOW PHOS scale inhibitor
- 0.5 Microns filtration
- 20,000 gallon capacity
- Models 601-1000 lbs/day

AR-40000-P

- Chlorine Reduction
- SLOW PHOS scale inhibitor
- 0.5 Microns filtration
- 40,000 gallon capacity
- Models 1001-2500 lbs/day

Standard Features and Benefits

- 95% average reduction of chlorine from incoming water supply assures the ice tastes and smells fresher, clearer and more enjoyable
- Silver impregnated carbon block provides antimicrobial protection against potential bacteria microorganisms, algae, mold and slime on ice machine surfaces
- Engineered with SLOW PHOS (slowly soluble polyphosphate) to inhibit scale formation and corrosion
- Reduces dirt, submicron particles (down to 0.5 microns) and eliminates contaminates such as cryptosporidium and giardia cysts.
- Ultra-fine filtration (0.5 Microns) with silver impregnated carbon block and slowly soluble polyphosphates provides triple protection from harmful contaminates that can affect your ice machine's performance
- Reduces ice machine cost and maintenance frequency by reducing scale, impurities, and contaminates that can enter the machine.
- Extends the life of the ice machine, when the filters are changed every 6 months or when water pressure is below 20 psi.
- Optimizes the daily performance of the machine, allowing it run at full capacity producing the freshest and purist ice possible
- Cartridges are easy to install, safe, sanitary and can be changed out rapidly, "on the fly" without turning off the water supply
- **Certified to NSF/ANSI Standard 42, 53, 372, and CSA B483.1** by IAPMO and meets CUPC requirements.

IAPMO R&T Certifications

System Model #	Replace. Cartridge	Std. 42 Claims	Std. 53 Claims	Chlorine Red. Cap
AR-PRE-P	K00496	Part. Class 3	None	None
AR-10000-P	K00493	Chlorine & Part. Class 1	Cyst	15,000 gal
AR-20000-P	K00494	Chlorine & Part. Class 1	Cyst	20,000 gal
AR-40000-P	K00495	Chlorine & Part. Class 1	Cyst	40,000 gal

- CSAB483.1:For Canadian water standards
- *NSF/ANSI 53 cyst claim only valid at or below rated flow rate
- Warning : Do not use with water that is microbiologically unsafe or of unknown quality without adequate disinfections before or after the unit. For cold water use only. Not for residential use.

Note on Pre-filter: A pre-filter is recommended for all applications to achieve maximum filtration efficiency and cartridge life.

Warranty

3-Year parts and labor warranty on head, shroud, hardware, and mounting assembly.
(water filter cartridge not included).
Residential Warranty - 1 Year

AQ

IAPMO R&T WATER QUALITY PLATINUM SEAL IAPMO RESEARCH AND TESTING

UPC C ®

2110 South 26th Street
Manitowoc, WI 54220

Tel: 1.920.682.0161
Fax: 1.920.683.7589

www.manitowocice.com

Manitowoc

arctic pure+

Arctic Pure Plus

Premium Water Filters for Ice Machines

Dimensions

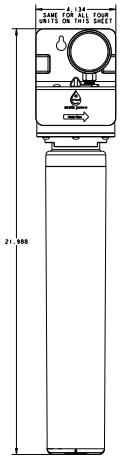

AR-PRE-P SYSTEM
4.13"W x 4.48"D x 22"H
10.5 x 11.37 x 55.9 cm

K00496 REP. CART.
3.1"W x 3.1"D x 16.8"H
7.9 x 7.9 x 42.6 cm

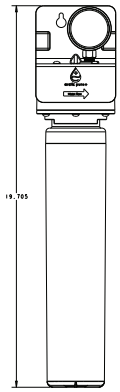

AR-10000-P SYSTEM
4.13"W x 4.48"D x 19.7"H
10.5 x 11.37 x 50.04 cm

K00493 REP. CART.
3.1"W x 3.1"D x 14.6"H
7.9 x 7.9 x 37.08 cm

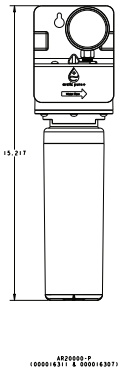

AR-20000-P SYSTEM
4.13"W x 4.48"D x 15.2"H
10.5 x 11.37 x 38.6 cm

K00494 REP. CART.
3.1"W x 3.1"D x 10.1"H
7.9 x 7.9 x 25.6 cm

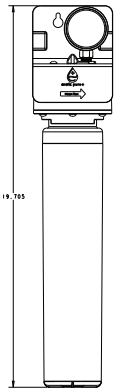

AR-40000-P SYSTEM
4.13"W x 4.48"D x 19.7"H
10.5 x 11.37 x 50.04 cm

K00495 REP. CART.
3.1"W x 3.1"D x 14.6"H
7.9 x 7.9 x 37.08 cm

Usage Matrix

Filter System (Replacement Cartridges)	AR-PRE-P (K00496)	AR-10000-P (K00493)	AR-20000-P (K00494)	AR-40000-P (K00495)
All Under Counters (Cubers, Flakers & Nuggets) Counter Top Nugget	X	X		
Modular Cubers: IT0300-IT750, IBF0620 Modular Flaker: RFF0320 Modular Nugget: RNF320	X	X		
Modular Cubers: IT0900, IBF0820C & IBT1020C Modular Flaker: RFF0620 RFF1220C, RFF1300 Modular Nuggets: RNF0620, RNF1020C, RNF1100	X		X	
Modular Cubers: IT1200, IT1500 & IT1900, IF1400C &IF1800C Modular Flaker: RFF2200C Modular Nugget: RNF2000C	X			X

Specifications and Shipping

System	Replacement Cartridge	Filtration level	Capacity gal	Service Flow Rate (max. gpm (lpm)	Operating Air Temp F (C)	Operating Water Temp F (C)	Operating Pressure psi (bar)	Mtg. Holes from Center in (cm)	Approx. Shipping Weight lbs (kg)	Qty System Lots	Qty Cartridge Lots
AR-PRE-P	K00496	5 Micron	NA	1.5 (5.7)	40°-110°F (4.4°- 43.3°)	40°-90°F (4.4°- 32.2°)	35 -125 (2.41-8.61)	1.5 (3.81)	4 (1.81)	6	12
AR-10000-P	K00493	0.5 Microns	15,000	0.75 (2.84)				1.5 (3.81)	5 (2.26)	6	12
AR-20000-P	K00494	0.5 Microns	20,000	1.25 (4.73)				1.5 (3.81)	4 (1.81)	6	12
AR-40000-P	K00495	0.5 Microns	40,000	2.0 (7.6)				1.5 (3.81)	5 (2.26)	6	12

Installation Tips

- Install vertically with cartridge hanging down
- Allow 2.5" (6.35cm) clearance below the cartridge for easy replacement
- Flush cartridge by running water through filter for ten (10) minutes
- Use copper or polyethylene 3/8" hose for Quick Connect fitting
- Always follow local plumping codes

Operation Tips

- Change cartridge every 6 months or when pressure gauge indicates below 35 psi (which ever comes first)
- Twist 1/4 turn to left to remove cartridge. Twist 1/4 turn to the right to install cartridge (Water can be left on)
- Protect from freezing—Failure to do so may result in cracking of the filter housing and cause water leakage
- When using non-Manitowoc ice makers, consult the ice machine's manufactures for water supply usage requirements.
- It is recommended to have your water supply tested by a professional to determine your water treatment needs.

Manitowoc Ice reserves the right to make changes to the design or specifications without prior notice.

2110 South 26th Street
Manitowoc, WI 54220

Tel: 1.920.682.0161
Fax: 1.920.683.7589

www.manitowocice.com
7805B_ArcticPurePlus
06/22

ArcticPure™ Accessory Warranty

Manitowoc Ice, Inc. (hereinafter referred to as the "COMPANY") warrants for a period of thirty-six months from the installation date (except as limited below) that new ArcticPure™ Accessory sold by the COMPANY shall be free of defects in material or workmanship under normal and proper use and maintenance as specified by the COMPANY and upon proper installation and start-up in accordance with the instruction manual supplied with the ArcticPure™ Accessory.

The obligation of the COMPANY under this warranty is limited to the repair or replacement of parts, components, or assemblies that in the opinion of the COMPANY are defective. This warranty is further limited to the cost of parts, components or assemblies and standard straight time labor charges at the servicing location.

Time and hourly rate schedules, as published from time to time by the COMPANY, apply to all service procedures. Additional expenses including without limitation, travel time, overtime premium, material cost, accessing or removal of the ArcticPure™ Accessory, or shipping are the responsibility of the owner, along with all maintenance, adjustments, and cleaning costs. Labor covered under this warranty must be performed by a COMPANY Contracted Service Representative or a refrigeration service agency as qualified and authorized by the COMPANY'S local Distributor. The COMPANY'S liability under this warranty shall in no event be greater than the actual purchase price paid by the customer for the ArcticPure™ Accessory.

The foregoing warranty shall not apply to (1) any part or assembly that has been altered, modified, or changed; (2) any part or assembly that has been subjected to misuse, abuse, neglect, or accidents; (3) wear items such as cartridges or o-rings; (4) any ArcticPure™ Accessory that has been installed and/or maintained inconsistent with the technical instructions provided by the COMPANY; or (5) any ArcticPure™ Accessory initially installed more than five years from the serial number production date.

The ArcticPure™ Accessory is designed to operate only with COMPANY'S ice machines.

THIS WARRANTY IS IN LIEU OF ALL OTHER WARRANTIES OR GUARANTEES OF ANY KIND, EXPRESSED OR IMPLIED, INCLUDING ANY IMPLIED WARRANTY OF MERCHANTABILITY OR FITNESS FOR A PARTICULAR PURPOSE. In no event shall the COMPANY be liable for any special, indirect, incidental or consequential damages. Upon the expiration of the warranty period, the COMPANY'S liability under this warranty shall terminate. The foregoing warranty shall constitute the sole liability of the COMPANY and the exclusive remedy of the customer or user.

To secure prompt and continuing warranty service, the warranty registration card must be completed and sent to the COMPANY within five (5) days from the installation date.

Complete the following and retain for your record:

Distributor/Dealer _____
Model Number _____ Serial Number _____
Installation Date _____

MANITOWOC ICE, INC.
2110 So. 26th St., P.O. Box 1720, Manitowoc, WI 54221-1720
Telephone: 920-682-0161 · Fax: 920-683-7585
Web Site - www.manitowocice.com
Form 80-1464-3 06/03

Ice Storage Bins

Model

☐ D320 ☐ D400 ☐ D420 ☐ D570 ☐ D970

D Bins

.75" (1.90 cm) Bin drain

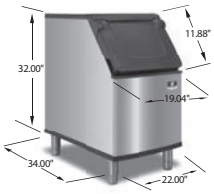

D320
264 lbs. (120 kgs)

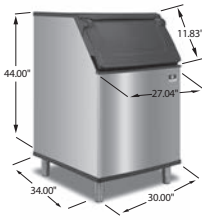

D570
532 lbs. (241 kgs)

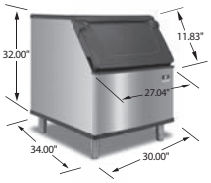

D400
365 lbs. (166 kgs)

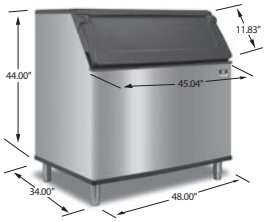

D970
882 lbs (400 kgs)

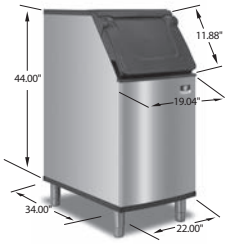

D420
383 lbs. (174 kgs)

Ergonomic NSF approved sanitary ice scoop included

D Bin Features

New Sanitary Scoop Ergonomic NSF approved sanitary ice scoop included with each bin. Built-in knuckle and thumb guard. Unique molded retaining lip allows maximum scooping every time. Per scoop capacity approximately 5.3/ lbs (2.4 kg)

Scoop Holder options New built-in scoop holder, keeps the ice scoop handle above the ice, or purchases the optional NSF approved External Scoop Holder Kit # K00461.

New Door design Clever built in side grips allow you to lift the bin door from anywhere you are standing (left, right or center) even when you have just one hand free.

Foamed Insulated Door Insulates the ice bin, reduces sweat on the door, helps keep ice lasting longer.

Stay up door Unique cammed bin door self-latch keeps the door in the open position and keeps the employee safe when scooping ice.

Ergonomic Door design Door is angled 53 degrees to allow for easier access to the ice in the bin especially when scooping from the bottom.

Duratech Metal Finish Manitowoc exterior material has better corrosion resistance than stainless steel, is smudge resistant and easy to keep clean.

New Bin liner Polyurethane Artic Blue bin liner accentuates the crisp clear ice from a Manitowoc Ice Machine.

Warranty

Bin & Accessories: 3 Year Parts & Labor.

	D-Bin Capacities				D-Bin Dimensions					
	*Application Capacity		**2018 AHRI Capacity		Height		Width		Depth	
D Bin Model	lbs.	kgs	Cu. ft	Cu. M	in.	cm	in.	cm	in.	cm
D320	264	119.90	8.9	0.25	38	96.5	22	55.9	34	86.4
D420	383	173.79	12.9	0.37	50	127	22	55.9	34	86.4
D400	365	165.70	12.3	0.35	38	96.5	30	76.2	34	86.4
D570	532	241.14	17.9	0.51	50	127	30	76.2	34	86.4
D970	882	400.11	29.7	0.84	50	127	48	121.9	34	86.4

*Application Capacity based on 90% of the total volume x 33 lbs/ ft3 average density of ice.
Ice must be managed
***2018 AHRI certified measurement for bin capacity

Above bin heights include leg height of of 6" / 15.24 cm
All bins include a sanitary plastic scoop and one set of adjustable legs
chrome legs (6-7.75in/15.24-20.32cm).
External Scoop holder order separately Kit # K00461
Metal Scoop order separately Kit # K00463

Manitowoc Ice reserves the right to make changes to the design or specifications without prior notice.

2110 South 26th Street
Manitowoc, WI 54220

Tel: 1.920.682.0161
Fax: 1.920.683.7589

www.manitowocice.com
6453E
6/22

Manitowoc®

Ice Storage Bins

D Bins

Indigo Ice Machines Series												
Machine			iT420	iT620	iT0300	iT450	iT0500 &iF0500N	iF0600N, iF0600C, iT0750	iF0900N, iT0900, iF0900C	iT1200, iT1200C	iF1400C, iF1800C	iT1500, iT1900
Machine Capacity @90/70 F			375	465	240	378	440	555, 530	710, 714	950, 1000	1200 1470 1600	1360, 1455
Bins	Bin Cap	Width	22"	22"	30"	30"	30"	30"	30"	30"	30"	48"
D320	264	22"	*	*								
D420	383	22"	*	*								
D400	365	30"	K00472	K00472	*	*	*	*	NR	NR	NR	
D570	532	30"	K00472	K00472	*	*	*	*	*	*	NR	
D970	882	48"	NR	NR	NR	K00470	K00470	K00470	K00470	K00470	K00471 + K00470	*

Manitowoc Flaker and Nugget Machines											
		Machine	RNP0320	RFP0320	RNP0620	RFP0620	RNF1020	RFF1220C	RNF1100	RFF1300 & RNF2000C	RFF2200C
Machine cap			251	286	451	540	825	958	825	874	1702
Bins	Bin cap	Width	22"	22"	22"	22"	22"	22"	30"	30"	36.7"
D320	264	22"	*	*	NR	NR	NR	NR			
D420	383	22"	*	*	*	*	NR	NR			
D400	365	30"	K00472	K00472	K00472	K00472	NR	NR	NR	NR	
D570	532	30"	NR	K00472	K00472	K00472	NR	NR	*	*	
D970	882	48"	NR	NR	K00473	K00473	K00473 if 2 used.	K00473 if 2 used.	K00470	K00470	K00470

An optional adapter is required when putting a narrower ice machine on a wider bin.
* No adapter is needed
NR= Not Recommend. Bin too small or too large for application.
Putting a wider machine on narrower bin is not an option.
Machines side by side must be water cooled, remote, or use a top air discharge for self-contained air cooled.
Application Bin Capacity shown in lbs using the AHRI rating based on 90% of total volume x 33 lbs/ft3 average density of ice.
Machine capacity shown in lbs/24hrs using the AHRI rating base at 90F ambient, 70F water temperature

Available Accessories

See price book for replacement: scoops, legs, specialty legs and casters

K00146 Convenient Ice Bagger

Includes bagger, D-bin adapter, and 250 bags and ties (Not for D320 or D400) Order K00068 replacement bags

K00461 External Scoop Holder

NSF approved. Can be mounted on the left or right side of bins, horizontally or vertically or on a wall.

K00463 Metal Scoop

Indestructible NFS approved aluminum alloy with sanitary knuckle and thumb guard. Works with K00461external scoop holder or hangs inside the D-Bin series. Limited life time guarantee.

K00462 Secure Fastening Kit

Securely fast the Indigo NXT ice machine head to the pre-drilled inserts on the back of the D-bin series. Stainless steel flanged feet attach to bin and can be screwed to the floor

Manitowoc Ice reserves the right to make changes to the design or specifications without prior notice.

2110 South 26th Street
Manitowoc, WI 54220

Tel: 1.920.682.0161
Fax: 1.920.683.7589

www.manitowocice.com
6453E
6/22

Manitowoc

LIMITED WARRANTY FOR ICE STORAGE BIN & DISPENSERS

LIMITED WARRANTY

Manitowoc Ice a division of Manitowoc FSG Operations, LLC, ("Company") warrants that new Ice Storage Bins or Dispensers sold by Company shall be free of defects in material or workmanship under normal and proper use and maintenance as specified by the Company and upon proper installation and start-up in accordance with the instruction manual supplied.

WHAT IS COVERED

- Parts and Labor for a period of three (3) years.
- Accessory Ice Transport Carts for two (2) years parts and labor.

The Ice Storage Bin / Dispenser warranty begins on the date of the original installation. This warranty shall not apply to any Ice Storage Bin or Dispenser initially installed more than five (5) years from the serial number production date.

The obligation of the Company under this warranty is limited to the repair or replacement of parts, components, or assemblies that in the sole opinion of the Company are defective. This warranty is further limited to the cost of parts, components or assemblies and standard straight time labor charges at the servicing location.

Time and hourly rate schedules, as published from time to time by the Company, apply to all service procedures. Additional expenses including without limitation, travel time, overtime premium, material cost, accessing or removal of the Ice Storage Bin / Dispenser, or shipping are the responsibility of the purchaser, along with all maintenance, adjustments, cleaning, and ice purchases. Labor covered under this warranty must be performed by an approved Company contracted Service Representative or a refrigeration service agency as qualified and authorized by the Company's local Distributor. The Company's liability under this warranty shall in no event be greater than the actual purchase price paid by purchaser for the Ice Storage Bin or Dispenser.

EXCLUSIONS FROM COVERAGE

- Repair or replacement of parts required because of misuse, improper care or storage, negligence, alteration, use of incompatible supplies or lack of specified maintenance shall be excluded.
- Normal maintenance items.
  Failures caused by adverse environmental, water conditions, or improper drainage.
- Improper or unauthorized repair.
- Any Ice Storage Bin / Dispenser that has been installed and/or maintained inconsistent with the instructions provided by the Company.
- Parts subject to damage beyond the control of Company, or to Ice Storage Bin's / Dispenser's which have been subject to accidents, damage in shipment, fire, floods, other hazards or acts of God that are beyond the control of the Company.
- This Limited Warranty shall not apply if the Ice Storage Bin / Dispenser is modified with parts and assemblies other than those manufactured by the Company, unless the Company approves these modifications for specific locations in writing prior to the commencement of such modification.

LIMITATIONS OF LIABILITY

The preceding paragraphs set forth the exclusive remedy for all claims based on failure of, or defect in, Ice Storage Bins or Dispensers sold hereunder, whether the failure or defect arises before or during the warranty period, and whether a claim, however instituted, is based on contract, indemnity, warranty, tort (including negligence), strict liability, implied by statute, common-law or otherwise , and Company and agents shall not be liable for any claims for personal injuries or consequential damages or loss, howsoever caused. Upon the expiration of the warranty period, all such liability shall terminate. THE FOREGOING WARRANTIES ARE EXCLUSIVE AND IN LIEU OF ALL OTHER WARRANTIES, WHETHER WRITTEN, ORAL, IMPLIED OR STATUTORY NO IMPLIED WARRANTY OF MERCHANTABILITY OR FITNESS FOR PARTICULAR PURPOSE SHALL APPLY, COMPANY DOES NOT WARRANT ANY PRODUCTS OR SERVICES OF OTHERS

REMEDIES

The liability of Company for breach of any warranty obligation hereunder is limited to: (i) the repair or replacement of the Ice Storage Bin or Dispenser on which the liability is based, or with respect to services, re-performance of the services; or (ii) at Company's option, the refund of the amount paid for said equipment or services. Any breach by Company with respect to any item or unit of equipment or services shall be deemed a breach with respect to that item or unit or service only

WARRANTY CLAIM PROCEDURE

Customer shall be responsible to:

- Complete and return warranty registration card or register on line within five (5) days from the installation date.
- All warranty service must be preformed by an approved Manitowoc contracted or authorized Service Representative. To schedule a service appointment contact your local Manitowoc Service Representative or visit us at www.manitowocice.com to find a Service Representative near you.

GOVERNING LAW

This Limited Warranty shall be governed by the laws of the state of Wisconsin, USA, excluding their conflicts of law principles. The United Nations Convention on Contracts for the International Sale of Goods is hereby excluded in its entirety from application to this Limited Warranty

COMPLETE AND RETAIN FOR YOUR RECORD:

Distributor/Dealer _____

Model Number _____

Serial Number _____

Installation Date _____

Manitowoc Ice
2110 South 26th Street
P.0. Box 1720
Manitowoc, WI 54221-1720
Web site: www.manitowocice.com

Rev 2 1/2/2012

{13.93}

Metro® C5 3 Series Insulation Armour™ Heated Holding and Proofing Cabinets

Metro C5 3 Series Insulation Armour™ Heated Holding and Proofing Cabinets offer Cool-to-touch design and provides energy efficiency at a lower initial investment.

- **Insulation Armour™:** Patented insulation technology retains heat, saves energy, and provides a cool-to-touch exterior. Durable polymer construction is dent, impact, and stain resistant. Molded-in hand holds create vertical handles for mobile applications.
- **Colors:** Insulation Armour is available in Red, Blue, or Gray standard and in other colors on a promotional basis or upon request.
- **Control:** Three modules are available: Holding, Moisture, and Combination Proof and Hold. All feature an easy-to-read digital thermometer, recessed control dials, a master on/off switch, and power indicator lights. All are removable without tools for easy cleaning, and allow for future upgrades without replacing entire cabinet body.
- **Performance:** All modules provide fast heat-up and recovery through a thermostatically controlled, forced convection system.
- **Sizes:** C5 3 Series cabinets are available in Full Height (71", 1803mm), 3/4 Height (59", 1499mm), 1/2 Height (44", 1118mm), and Under Counter (32", 813mm) sizes.
- **Doors:** Solid insulated aluminum or clear polycarbonate doors are available. Full Height cabinets can be configured with full length or dutch-style doors. Clear doors provide visibility of the contents of the cabinet without the heat loss associated with opening the door.
- **Capacity:** Three slide styles provide maximum holding capacity. Choose from Universal Wire, Lip Load, or Fixed Wire.
- **Reliability:** Reliability and durability are designed into every C5. High-quality components provide a long life of worry free use.
- **Power Options:** Choose between standard high wattage or low wattage models based on the specific needs of the application.

Red Full Height Dutch Clear Doors

Red Under Counter Solid Door | Blue 1/2 Height Full Solid Door | Gray 3/4 Height Full Clear Door | Blue Full Height Full Clear Door

3 Series Removable Control Modules

- **Holding Module:** Hot holding at higher temperatures without moisture control.*
- **Moisture Module:** Hot holding and proofing. Moisture control at any temperature.
- **Combination Module:** Hot holding and proofing. Moisture control at lower temperatures (proofing).

* Note: Cabinets with holding module do not include the water pan.

Metro Heated cabinets are for hot food holding applications only.

All Metro Catalog Sheets are available on our website: **metro.com**

LO2-270 | 10/24

Information and specifications are subject to change without notice.
Please confirm at time of order.
Copyright © 2024 InterMetro Industries Corp.

metro.com
North Washington Street, Wilkes-Barre, PA 18705
Product Information. U.S. and Canada: 1.800.992.1776
Outside U.S. and Canada: metro.com/contactus

{13.93}

Metro® C5 3 Series Insulation Armour™ Heated Holding and Proofing Cabinets

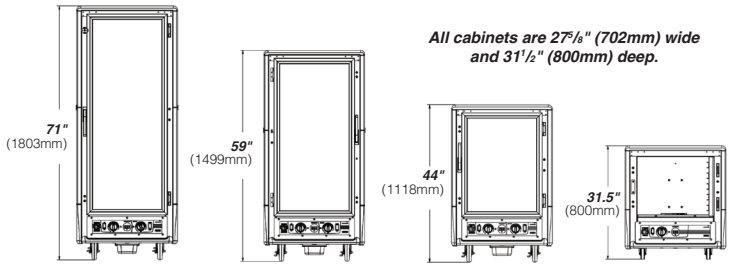

Full Height *3/4 Height* *1/2 Height* *Under Counter*

- **Cabinet Material:** .063" (1.8mm) aluminum, natural interior with .125" (3.2mm) aluminum chassis.
- **Insulation Armour™:** High Density Polyethylene (HDPE).
- **Casters:** Four casters with 5" (127mm) donut neoprene wheel, double ball bearing swivel, ball bearing axel, nickel plated, two with brake. 3" rubber casters on Under Counter models.
- **Solid Doors:** Fully insulated with 1" (25.4mm) fiberglass, double panel .063" (1.8mm) aluminum, brushed exterior, natural interior.
- **Clear Doors:** Extruded aluminum powder coated frame with .090" (2.3mm) polycarbonate window.
- **Hinges:** Field reversible, double hinged, 180° swing, with long-life nylon bearings.
- **Gaskets:** High temperature, door mounted, Santoprene gaskets.
- **Latches:** Polymer high-strength magnetic pull latch with lever-action release.
- **Hand Holds:** Molded into the Insulation Armour™ on all four corners.
- **Universal Slides:** ¼" (6.4mm) dia. nickel-chrome electroplated wire, adjustable on 1½" (38mm) increments.
- **Lip Load Slides:** 1½"x½"x.063" (38x38x1.8mm) extruded aluminum channel slides, 1½" (38mm) fixed spacing.
- **Fixed Wire Slides:** ¼" (6.4mm) dia. nickel-chrome electroplated wire, welded on 3" (76mm) spacing. Not offered in Under Counter models.
- **Drip Trough:** Smooth polymer drip trough with catch pan.
- **Holding Modules:** Removable without tools, digital thermometer, recessed control dials, master on/off switch, "Power On" light, water pan, ball bearing blower forced air system, 7½' cord, UL, CUL, and NSF Listed.

Electrical and Performance:

- **Holding Module:** 80°F (27°C) to 200°F (93°C) operating temperature range. Available:120V 2000W & 1440W, 220-240V 1681-2000W.
- **Moisture Module:** 80°F (27°C) to 200°F (93°C) operating temperature range. 35% RH at 160°F (71°C), 95% RH at 95°F (35°C). Available: 120V 2000W, 220-240V 1681-2000W.
- **Combination Module:** 80°F (27°C) to 200°F (93°C) operating temperature range. 95% RH at 95°F (35°C). Available:120V 2000W & 1440W, 220-240V 1681-2000W.
- **Clearance Requirements:** 18" (46cm) away from any cooking equipment. AVOID contact with surfaces that exceed 200°F (90°C). Minimum clearance from enclosures is 1½" (38mm) on sides and back, ½" (12.7mm) on top.

Cabinet Height
9 = Full Height
7 = 3/4 Height
5 = 1/2 Height
3 = Under Counter

Module Type
C = Combination
M = Moisture
H = Heated Holding

Slide Type
U = Universal Wire
4 = Fixed Wire
L = Lip Load Aluminum

C5 3 9 - C DC - U

NEMA 5-20P
For Standard Wattage Cabinets (120V, 16A, 60Hz, 2000W)

Door Style
FS = Full Length Solid
FC = Full Length Clear
DS = Dutch Solid *
DC = Dutch Clear *

*Please note: Dutch doors only available on full-height models. Cabinets ordered without a color designation default to Red.

Low Watt Model Number Description

C5 3 9 - C L DC - U

NEMA 5-15P
Add "L" for Lower Wattage Combination or Holding Module Cabinets (120V, 12A, 60Hz, 1440W)

Note: Under Counter holding and combination module cabinets are only available in low watt. Under Counter moisture module cabinets are available in 120V, 2000W.

Export Model Number Description

C5 3 9 - C X DC - U

NEMA 6-15P
Add "X" for Export Cabinets (220-240V, 7.6-8.3A, 50/60Hz, 1681-2000W)

Blue or Gray Model Description

C5 3 9 - C DC - U - BU

** Cabinets ordered without a color designation default to Red.

Please Note: Under Counter Cabinets are only offered in Red & Gray.

Color **
No Suffix = Red
BU = Blue
GY = Gray

Models with Accessories or Options

C5 3 9 - CDC - U A
C5 3 9 - CDC - U - BU A

An "A" suffix indicates that accessories need to be factory assembled to the cabinet. Order accessories separately.

Please Note: Under Counter Combination & Holding modules are not available in 120V, 2000W.

Options/Accessories*

- Small Item Shelf (C5-SHELF-S)
- Stainless Steel Legs (C5-SSLEGS)
- Universal Slide Pair, Chrome (C5-USLIDEPR-C)
- 6" Casters (C5-6CASTER)
- Rear Rigid Casters (C5-5RDGCSTR)
- Travel Latch (C5-TRVL)
- Flush Door Latch (C5-LATCHFLUSH-1)*
- Straight Plug, 20 Amp, 120V (C5-STRPLG-20)
- Straight Plug, 15 Amp, 120V (C5-STRPLG-15)
- Factory Left-Hand Hinging (DD3768)
- Stainless Steel Universal Slides (please call)

**Please note: (2) handles required for dutch door models*

Pan Capacity	Universal Wire Slide					Lip Load Slide	Fixed Wire Slide	
Cabinet Size	Slide Pairs	Sheet Pans	Steam Pans			Sheet Pans	Sheet Pans	Steam Pans
	Provided	18"x26"	12"x20"x2.5" GN 1/1 65mm	12"x20"x4" GN 1/1 100mm	12"x20"x6" GN 1/1 150mm	18"x26"	18"x26"	12"x20"x2.5" GN 1/1 65mm
Full Height	18	18	34	24	14	35	18	34
Full Height Dutch	18	17	32	22	12	34	17	32
3/4 Height	14	14	26	16	10	27	14	26
1/2 Height	9	8	16	10	6	17	8	16
Under Counter	5	5	10	6	4	10	N/A	N/A

WELBILT an AI Group Company

LAKESIDE®

Item # _____
Quantity _____

Stainless Steel Utility Carts

Heavy Duty - 700 Lb Capacity

Spec. # _____

AIA # _____

Model 744

Models
710, 711, 721, 722, 743, 744, 758, 759
510, 511, 521, 522, 543, 544, 558, 559

"U" Shaped Angled Frame Provides The Strength Needed For Heavy-duty Jobs

- 700 lb. (300 kg) capacity is ideal for continuous moving of heavy loads over various standard floor surfaces
- Rugged 18 gauge reinforced stainless steel shelves are stain and rust resistant. Electronically welded for added strength.
- Easy to clean and sanitize, simply wipe down or steam clean
- Leg and handle bumpers protect walls and furniture
- NSF listed models available

Specifications

Unit shall be of fully welded stainless steel construction. Legs and frame shall be of U-frame design, eliminating the need for corner reinforcements. Leg/frame shall be .120 x 1" x 1" angle stainless steel. Shelves shall be of 18-gauge stainless steel and shall be welded to vertical leg frames. Shelves shall be double hemmed on all four edges for extra rigidity. Unit shall have two each 5" (127 mm) diameter extra-load swivel casters with 1-1/4" (32 mm) wide non-marking polyurethane wheels, and two each 8" diameter extra-load wheels mounted to a fixed axle. Swivel casters shall be plate type and shall be bolted to an 18-gauge 5" (127 mm) wide stainless steel cross member with a galvanized reinforcement. Unit shall have push handle made of 18 gauge 1" O.D. stainless steel `tubing. Handle mounting brackets shall be welded to vertical leg frame. Unit shall have two each bumpers mounted to handle ends and two each 6" (152 mm) vertical bumpers riveted to front legs.

Lakeside Manufacturing, Inc.
4900 West Electric Avenue • West Milwaukee, WI 53219 U.S.A.
800-558-8565 • 414-902-6400 • Fax 414-902-6446 • info@eLakeside.com • www.eLakesideFoodservice.com

Lit# HDUC 0916

Lakeside reserves the right to modify specifications or discontinue models without prior notification.

Printed in the U.S.A.

Stainless Steel Utility Carts

Heavy Duty - 700 Lb Capacity

Top View

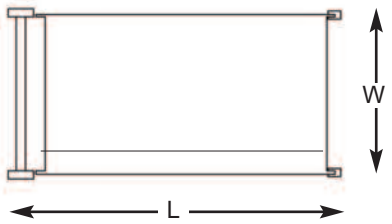

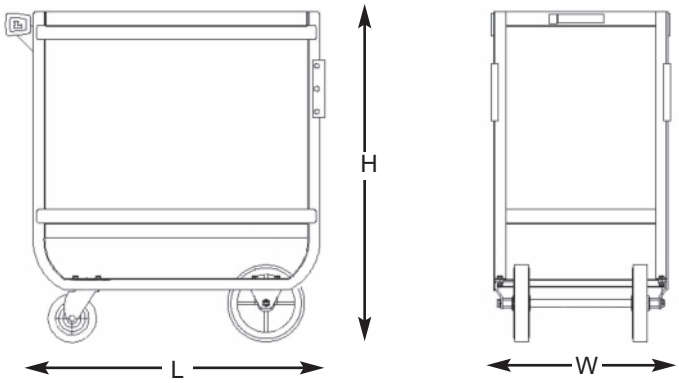

AutoCAD drawings available through KCL CADalog

AIA #

Spec. #

Model Information

Model	NSF Model	Shelf Description # of	Shelf Description Size	Shelf Description Clearance	Overall Size L	Overall Size W	Overall Size H	Case Weight lbs.	Case Weight (kg.)
710	510	2	15-1/2” x 24” (394 x 610)	19” (483)	30” (762)	16-1/4” (413)	34-1/4” (870)	49	(22.2)
711	511	3	15-1/2” x 24” (394 x 610)	10” (254)	30” (762)	16-1/4” (413)	34-1/4” (870)	57	(25.9)
721	521	2	18” x 27” (457 x 686)	19” (483)	32-5/8” (829)	19-3/8” (492)	34-1/2” (876)	53	(24)
722	522	3	18” x 27” (457 x 686)	10” (254)	32-5/8” (829)	19-3/8” (492)	34-1/2” (876)	63	(28.6)
743	543	2	21” x 33” (533 x 838)	21” (533)	38-5/8” (981)	22-3/8” (568)	37-1/8” (943)	64	(29)
744	544	3	21” x 33” (533 x 838)	11-3/8” (289)	38-5/8” (981)	22-3/8” (568)	37-1/8” (943)	78	(35.4)
758	558	2	21” x 49” (533 x 1245)	21” (533)	54-5/8” (1387)	22-3/8” (568)	37” (940)	87	(39.5)
759	559	3	21” x 49” (533 x 1245)	11-3/8” (289)	54-5/8” (1387)	22-3/8” (568)	37” (940)	108	(49)

Measurements in ( ) denote metric millimeters, unless otherwise specified.

Optional Accessories

- ☐ Extended perimeter bumper
- ☐ All 5” swivel casters
- ☐ Set of 2 ea. 5” brake casters

LAKESIDE®
MOVING FOODSERVICE FORWARD™

Lakeside Manufacturing, Inc.
4900 West Electric Avenue • West Milwaukee, WI 53219 U.S.A.
800-558-8565 • 414-902-6400 • Fax 414-902-6446
info@eLakeside.com • www.eLakesideFoodservice.com

Lit# HDUC 0916

Lakeside reserves the right to modify specifications or discontinue models without prior notification.

Printed in the U.S.A.

Profit from the Eagle Advantage®

Specification Sheet

Item No.: _____
Project No.: _____
S.I.S. No.: _____

Director's Choice® Tray Platform Unit

MODEL:
❑ **DCS2-TPU**

Short Form Specifications

Eagle Director's Choice® Tray Platform Unit, model DCS2-TPU. Top to be 16/304 stainless steel turned down on all sides. 1½″ square type 304 stainless steel all-welded tubular base. Removable solid bottom panel will store up to 200 trays, and furnished with ten nylon silverware cylinders. Fully mobile with 5″ poly casters, two with brake.

#DCS2-TPU tray platform unit

Design and Construction Features

- Welded 1½″ (38mm) type 304 stainless steel square tubular base construction.
- Open frame features 1½″ (38mm) square stainless steel tubing.
- Fully mobile - standard 5″ (127mm) swivel casters, two with brake.
- Removable two-section undershelf.
- Includes ten white dishwasher-safe nylon silverware cylinders.
- Holds up to 200 trays.
- 24″ (610mm) front-to-back, 36″ (914mm) side-to-side.
- 39″ (991mm) overall height.

Options / Accessories *

* This is a freestanding unit not designed to lock together with other units. Optional laminates, front/end panels, tray slides, workboards, and serving shelves do not apply.

EAGLE GROUP
100 Industrial Boulevard, Clayton, DE 19938-8903 USA
Phone: 302-653-3000 • 800-441-8440 • Fax: 302-653-2065
www.eaglegrp.com
www.eaglegrpnews.com
www.eaglemhc.com

Certifications / Approvals

NSF

AutoQuotes

KCL

For custom configuration or fabrication needs, contact our **SpecFAB® Division.**
Phone: 302-653-3000 • Fax: 302-653-2065 • e-mail: quotes@eaglegrp.com

EG33.21 Rev. 07/23

Spec sheets available for viewing, printing or downloading from our online literature library at our websites

Eagle Foodservice Equipment, Eagle MHC, and SpecFAB® are divisions of Eagle Group. ©2023 by the Eagle Group

EG33.21

Catalog Specification Sheet No.

Director's Choice® Tray Platform Unit

Profit from the Eagle Advantage®

Item No.: _____
Project No.: _____
S.I.S. No.: _____

Director's Choice® Tray Platform Unit

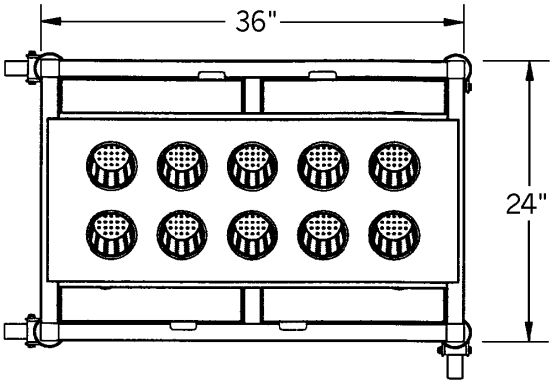

TOP VIEW

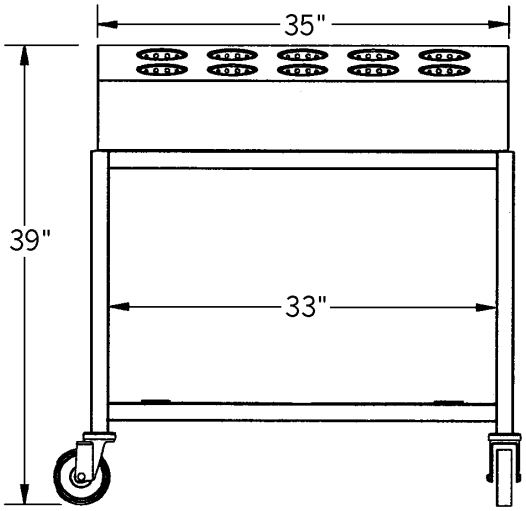

FRONT VIEW

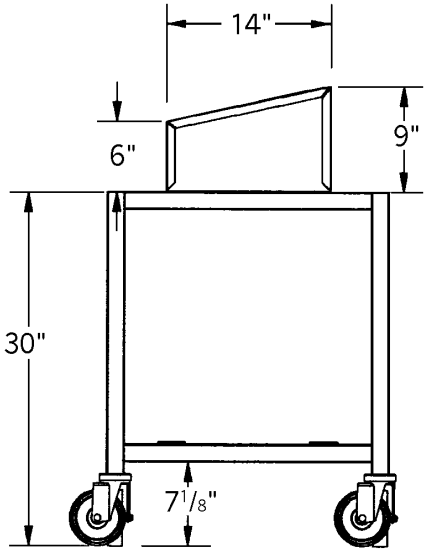

SIDE VIEW

	width		length		weight	
model #	in.	mm	in.	mm	lbs.	kg
DCS2-TPU	24″	610	36″	914	250	113.4

EAGLE GROUP
100 Industrial Boulevard, Clayton, DE 19938-8903 USA
Phone: 302-653-3000 or 800-441-8440 • Fax: 302-653-2065
www.eaglegrp.com • www.eaglegrpnews.com • www.eaglemhc.com

Printed in U.S.A.
©2023 by Eagle Group
Rev. 07/23

Spec sheets available for viewing, printing or downloading from our online literature library at our websites

Although every attempt has been made to ensure the accuracy of the information provided, we cannot be held responsible for typographical or printing errors. Information and specifications are subject to change without notice. Please confirm at time of order.

EAGLE GROUP®

Profit from the Eagle Advantage®

Specification Sheet

Item No.: _____

Project No.: _____

S.I.S. No.: _____

Director's Choice® Options and Accessories

MODELS:

❑ ***DC*-SO-ST*** ❑ ***SSH**** ❑ ***ASH****

❑ ***DC*-SO-DT*** ❑ ***BSH****

** See charts for complete model numbers.*

single tier sneeze guard

double tier sneeze guard

display light

heat lamp

Sneeze Guards…

Features stainless steel shelf, with front panel and end guards made of 15⁄64″ (6mm)-thick abrasion-resistant polycarbonate material. Must be ordered at the same time as base unit. Factory-installation is required on sneeze guards and options.

…Single Tier

14″-tall x 15⁄16″-wide (356 x 386mm).

description	length in.	length mm	weight lbs.	weight kg	model #
For 36″ (914mm) long units	36″	914	50	22.7	***DC2-SO-ST***
For 50″ (1270mm) long units	50″	1270	88	39.9	***DC3-SO-ST***
For 64″ (1626mm) long units	64″	1626	125	56.7	***DC4-SO-ST***
For 78″ (1981mm) long units	78″	1981	155	70.3	***DC5-SO-ST***
For 96″ (2438mm) long units	96″	2438	240	108.9	***DC6-SO-ST***

…Double Tier

24″-tall x 24½″-wide (610 x 622mm).

description	length in.	length mm	weight lbs.	weight kg	model #
For 36″ (914mm) long units	36″	914	80	36.3	***DC2-SO-DT***
For 50″ (1270mm) long units	50″	1270	118	53.5	***DC3-SO-DT***
For 64″ (1626mm) long units	64″	1626	155	70.3	***DC4-SO-DT***
For 78″ (1981mm) long units	78″	1981	185	83.9	***DC5-SO-DT***
For 96″ (2438mm) long units	96″	2438	270	122.5	***DC6-SO-DT***

Options for Sneeze Guards

Display lights – 120V. Includes cord and NEMA 5-15P plug to exit through base at operator's right. Cannot be used on HFU units (see EG33.02) or with optional heat lamps. One light per tier. To order, add suffix "**-L**". Example: DC2-SO-ST-**L**

Heat lamps – 120V. Includes 6′ (1829mm) cord and NEMA 5-15P plug (NEMA 5-20P on 1500W unit). 450 to 1500W output depending on length. Attaches to underside of sneeze guard (or to underside of bottom sneeze guard for double-tier). Cannot be used with optional display lights. To order, add suffix "**-F**". Example: DC2-SO-ST-**F**

Fully Enclosed Sneeze Guards – For "pass-over" operation. Facilitates complete food protection. To order, replace "SO" in model number with "**SOF**". Example: DC2-**SOF**-ST

Tempered Glass Panels – Consult factory.

EAGLE GROUP
100 Industrial Boulevard, Clayton, DE 19938-8903 USA
Phone: 302-653-3000 • Fax: 302-653-2065
www.eaglegrp.com

Foodservice Division: Phone 800-441-8440
MHC/Retail Display Divisions: Phone 800-637-5100

AUTOQUOTES

KCL

For custom configuration or fabrication needs, contact our **SpecFAB® Division.**
Phone: 302-653-3000 • Fax: 302-653-2065 • e-mail: quotes@eaglegrp.com

Spec sheets available for viewing, printing or downloading from our online literature library at *www.eaglegrp.com*

Eagle Foodservice Equipment, Eagle MHC, SpecFAB®, and Retail Display are divisions of Eagle Group. ©2015 by the Eagle Group

EAGLE GROUP®
Profit from the Eagle Advantage®

Item No.: _____
Project No.: _____
S.I.S. No.: _____

Director's Choice® Options and Accessories

serving shelf

Serving Shelves

With clear polycarbonate sneeze guard. 15½″ (394mm) height.

description	length in.	length mm	weight lbs.	weight kg	model #
For 36″ (914mm) long units	36″	914	25	11.3	***SSH2***
For 50″ (1270mm) long units	50″	1270	30	13.6	***SSH3***
For 64″ (1626mm) long units	64″	1626	35	15.9	***SSH4***
For 78″ (1981mm) long units	78″	1981	40	18.1	***SSH5***
For 96″ (2438mm) long units	96″	2438	50	22.7	***SSH6***

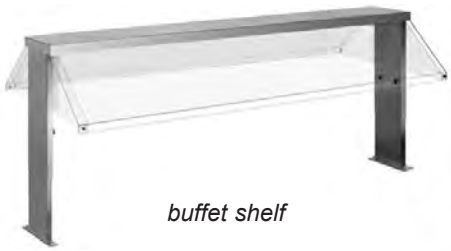

buffet shelf

Buffet Shelves

With clear polycarbonate sneeze guard. 23⅞″–27⅞″ (606–708mm) adjustable height.

description	length in.	length mm	weight lbs.	weight kg	model #
For 36″ (914mm) long units	36″	914	25	11.3	***BSH2***
For 50″ (1270mm) long units	50″	1270	30	13.6	***BSH3***
For 64″ (1626mm) long units	64″	1626	35	15.9	***BSH4***
For 78″ (1981mm) long units	78″	1981	40	18.1	***BSH5***
For 96″ (2438mm) long units	96″	2438	50	22.7	***BSH6***

tilt/adjustable sneeze guard

Tilt/Adjustable Serving Shelves

With clear polycarbonate sneeze guard. 15½″ (394mm) height.

description	length in.	length mm	weight lbs.	weight kg	model #
For 36″ (914mm) long units	36″	914	25	11.3	***ASH2***
For 50″ (1270mm) long units	50″	1270	30	13.6	***ASH3***
For 64″ (1626mm) long units	64″	1626	35	15.9	***ASH4***
For 78″ (1981mm) long units	78″	1981	40	18.1	***ASH5***
For 96″ (2438mm) long units	96″	2438	50	22.7	***ASH6***

EAGLE GROUP
100 Industrial Boulevard, Clayton, DE 19938-8903 USA
Phone: 302-653-3000 • Fax: 302-653-2065
www.eaglegrp.com

Foodservice Division: Phone 800-441-8440
MHC/Retail Display Divisions: Phone 800-637-5100

Printed in U.S.A.
©2015 by Eagle Group
Rev. 08/15

Spec sheets available for viewing, printing or downloading from our online literature library at *www.eaglegrp.com*

Although every attempt has been made to ensure the accuracy of the information provided, we cannot be held responsible for typographical or printing errors. Information and specifications are subject to change without notice. Please confirm at time of order.

EAGLE GROUP®

Profit from the Eagle Advantage®

Specification Sheet

Item No.: _____

Project No.: _____

S.I.S. No.: _____

Director's Choice® Options and Accessories

MODELS:

❑ ***DC*-SO-ST*** ❑ ***SSH**** ❑ ***ASH****

❑ ***DC*-SO-DT*** ❑ ***BSH****

** See charts for complete model numbers.*

single tier sneeze guard

double tier sneeze guard

display light

heat lamp

Sneeze Guards…

Features stainless steel shelf, with front panel and end guards made of 15⁄64″ (6mm)-thick abrasion-resistant polycarbonate material. Must be ordered at the same time as base unit. Factory-installation is required on sneeze guards and options.

…Single Tier

14″-tall x 15⁄16″-wide (356 x 386mm).

description	length in.	length mm	weight lbs.	weight kg	model #
For 36″ (914mm) long units	36″	914	50	22.7	***DC2-SO-ST***
For 50″ (1270mm) long units	50″	1270	88	39.9	***DC3-SO-ST***
For 64″ (1626mm) long units	64″	1626	125	56.7	***DC4-SO-ST***
For 78″ (1981mm) long units	78″	1981	155	70.3	***DC5-SO-ST***
For 96″ (2438mm) long units	96″	2438	240	108.9	***DC6-SO-ST***

…Double Tier

24″-tall x 24½″-wide (610 x 622mm).

description	length in.	length mm	weight lbs.	weight kg	model #
For 36″ (914mm) long units	36″	914	80	36.3	***DC2-SO-DT***
For 50″ (1270mm) long units	50″	1270	118	53.5	***DC3-SO-DT***
For 64″ (1626mm) long units	64″	1626	155	70.3	***DC4-SO-DT***
For 78″ (1981mm) long units	78″	1981	185	83.9	***DC5-SO-DT***
For 96″ (2438mm) long units	96″	2438	270	122.5	***DC6-SO-DT***

Options for Sneeze Guards

Display lights – 120V. Includes cord and NEMA 5-15P plug to exit through base at operator's right. Cannot be used on HFU units (see EG33.02) or with optional heat lamps. One light per tier. To order, add suffix "**-L**". Example: DC2-SO-ST-**L**

Heat lamps – 120V. Includes 6′ (1829mm) cord and NEMA 5-15P plug (NEMA 5-20P on 1500W unit). 450 to 1500W output depending on length. Attaches to underside of sneeze guard (or to underside of bottom sneeze guard for double-tier). Cannot be used with optional display lights. To order, add suffix "**-F**". Example: DC2-SO-ST-**F**

Fully Enclosed Sneeze Guards – For "pass-over" operation. Facilitates complete food protection. To order, replace "SO" in model number with "**SOF**". Example: DC2-**SOF**-ST

Tempered Glass Panels – Consult factory.

EAGLE GROUP
100 Industrial Boulevard, Clayton, DE 19938-8903 USA
Phone: 302-653-3000 • Fax: 302-653-2065
www.eaglegrp.com

Foodservice Division: Phone 800-441-8440
MHC/Retail Display Divisions: Phone 800-637-5100

AUTOQUOTES

KCL

For custom configuration or fabrication needs, contact our **SpecFAB® Division.**
Phone: 302-653-3000 • Fax: 302-653-2065 • e-mail: quotes@eaglegrp.com

Spec sheets available for viewing, printing or downloading from our online literature library at *www.eaglegrp.com*

Eagle Foodservice Equipment, Eagle MHC, SpecFAB®, and Retail Display are divisions of Eagle Group. ©2015 by the Eagle Group

EAGLE GROUP®
Profit from the Eagle Advantage®

Item No.: _____
Project No.: _____
S.I.S. No.: _____

Director's Choice® Options and Accessories

serving shelf

Serving Shelves

With clear polycarbonate sneeze guard. 15½″ (394mm) height.

description	length in.	length mm	weight lbs.	weight kg	model #
For 36″ (914mm) long units	36″	914	25	11.3	***SSH2***
For 50″ (1270mm) long units	50″	1270	30	13.6	***SSH3***
For 64″ (1626mm) long units	64″	1626	35	15.9	***SSH4***
For 78″ (1981mm) long units	78″	1981	40	18.1	***SSH5***
For 96″ (2438mm) long units	96″	2438	50	22.7	***SSH6***

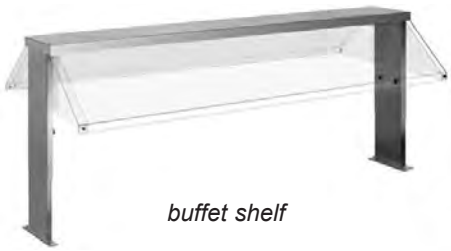

buffet shelf

Buffet Shelves

With clear polycarbonate sneeze guard. 23⅞″–27⅞″ (606–708mm) adjustable height.

description	length in.	length mm	weight lbs.	weight kg	model #
For 36″ (914mm) long units	36″	914	25	11.3	***BSH2***
For 50″ (1270mm) long units	50″	1270	30	13.6	***BSH3***
For 64″ (1626mm) long units	64″	1626	35	15.9	***BSH4***
For 78″ (1981mm) long units	78″	1981	40	18.1	***BSH5***
For 96″ (2438mm) long units	96″	2438	50	22.7	***BSH6***

tilt/adjustable sneeze guard

Tilt/Adjustable Serving Shelves

With clear polycarbonate sneeze guard. 15½″ (394mm) height.

description	length in.	length mm	weight lbs.	weight kg	model #
For 36″ (914mm) long units	36″	914	25	11.3	***ASH2***
For 50″ (1270mm) long units	50″	1270	30	13.6	***ASH3***
For 64″ (1626mm) long units	64″	1626	35	15.9	***ASH4***
For 78″ (1981mm) long units	78″	1981	40	18.1	***ASH5***
For 96″ (2438mm) long units	96″	2438	50	22.7	***ASH6***

EAGLE GROUP
100 Industrial Boulevard, Clayton, DE 19938-8903 USA
Phone: 302-653-3000 • Fax: 302-653-2065
www.eaglegrp.com

Foodservice Division: Phone 800-441-8440
MHC/Retail Display Divisions: Phone 800-637-5100

Printed in U.S.A.
©2015 by Eagle Group
Rev. 08/15

Spec sheets available for viewing, printing or downloading from our online literature library at *www.eaglegrp.com*

Although every attempt has been made to ensure the accuracy of the information provided, we cannot be held responsible for typographical or printing errors. Information and specifications are subject to change without notice. Please confirm at time of order.

Profit from the Eagle Advantage®

Specification Sheet

Item No.: _____
Project No.: _____
S.I.S. No.: _____

Director's Choice® Cold Food Units with Refrigerated Cold Pans

MODELS:

- ❑ ***DCS2-CFUR*** ❑ ***DCS2-CFURN***
- ❑ ***DCS3-CFUR*** ❑ ***DCS3-CFURN***
- ❑ ***DCS4-CFUR*** ❑ ***DCS4-CFURN***
- ❑ ***DCS5-CFUR*** ❑ ***DCS5-CFURN***
- ❑ ***DCS6-CFUR*** ❑ ***DCS6-CFURN***

Short Form Specifications

Eagle Director's Choice® Cold Food Unit with Refrigerated Mechanical Cold Pan, model _____. Top to be 16/304 stainless steel turned down on all sides. 1½″ square type 304 stainless steel all-welded tubular base. Stainless steel apron on operator's side. Fully mobile with 5″ poly tread casters, two with brake. Quick release spring loaded docking device keeps adjoining units together. Fully insulated cold pan provides maximum efficiency and energy savings. Available with 4⅝″ standard-depth cold pan, optional 9¾″-deep cold pan, or 9″-deep cold pan with recessed top which conforms to NSF-7 standard for refrigeration. Comes with self-contained refrigeration system. Accommodates standard 12″ x 20″ pans. Provided with a ¾″ stainless steel drain. Standard laminate front panel is holly berry red (Wilsonart® #D307-60).

cold food unit shown with optional double tier sneeze guards, optional tray slide and optional laminate end panels

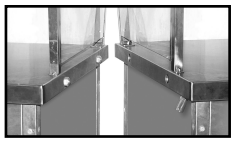

exclusive docking device joins units together without the use of tools

Options / Accessories

- ❑ Laminated end panels
- ❑ Stainless steel end panels
- ❑ Stainless steel front panel
- ❑ Stainless steel tray slide*
- ❑ Work shelf**
- ❑ Rear doors and panels***
- ❑ Sneeze guards - single tier
- ❑ Sneeze guards - double tier
- ❑ Display lights for overshelf
- ❑ 9¾″ Full depth cold pan
- ❑ 9¾″ Full depth cold pan with side coils
- ❑ Specify laminate _____
- ❑ Removable undershelf
- ❑ 12″ x 20″ food pans
- ❑ NSF-7 compliance
- ❑ 5-year compressor warranty****
- ❑ Custom options

* Available in solid ribbed, square tubular or round tubular. For front, rear, or ends.
** Available in hardwood, stainless steel, poly, or Richlite®. For front, rear, or ends.
*** Available in hinged, solid, or louvered
**** Specify at time of order

Design and Construction Features

- 30″ (762mm) wide top is solid, constructed of 16 gauge type 304 stainless steel, die-formed, welded, polished, and reinforced with hat channel.
- 120V operation wired to a 6′ (1829mm) cord and NEMA 5-15P plug.
- Welded 1½″ (38mm) type 304 stainless steel square tubular base construction.
- Open-base frame features type 304 stainless steel apron on operator's side.
- Cold Pans are 20″ (508mm)-wide. Accepts 12″ x 20″ (305 x 508mm) food pans. Includes removable adapter bars.
- Three working heights available—see Catalog Sheet EG33.07A:
  - 34″ (864mm) standard working height complies with ADA guidelines for accessibility standards.
  - 30″ (762mm) for middle schools.
  - 28″ (711mm) low profile for elementary schools and nursing/healthcare facilities.
- Tray slide heights* available—see Catalog Sheet EG33.07A:
  - 31″ (787mm) standard height for middle & high schools.
  - 27″ (686mm) height for elementary schools and nursing/healthcare facilities.
- Fully mobile - standard 5″ (127mm) poly tread casters, two with brake (brake casters on server side).
- Quick-release spring-loaded docking device keeps adjoining units together without the use of tools.
- Standard front holly berry red (Wilsonart® D307-60) laminate mounted on 18 gauge galvanized subpanel.
- All units accommodate optional accessories, including tray slides, work shelves, and removable undershelves. See Catalog Sheet EG33.07A.

* Tray slide heights noted pertain to units with 34″ (864mm) standard working height.

Certifications / Approvals

NSF c UL us

AutoQuotes

KCL

EAGLE GROUP
100 Industrial Boulevard
Clayton, DE 19938-8903 USA
Phone: 302-653-3000 • 800-441-8440
Fax: 302-653-2065
www.eaglegrp.com • www.eaglemhc.com

For custom configuration or fabrication needs, contact our **SpecFAB® Division.**
Phone: 302-653-3000 • Fax: 302-653-2065 • e-mail: quotes@eaglegrp.com

EG33.01A Rev. 09/22

Spec sheets available for viewing, printing or downloading from our online literature library at *www.eaglegrp.com*

Eagle Foodservice Equipment, Eagle MHC, and SpecFAB® are divisions of Eagle Group. ©2022 by the Eagle Group

EG33.01A

Catalog Specification Sheet No.

Director's Choice® Cold Food Units with Refrigerated Cold Pan

EAGLE GROUP®

Profit from the Eagle Advantage®

Item No.: _____

Project No.: _____

S.I.S. No.: _____

Director's Choice® Cold Food Units with Refrigerated Cold Pan

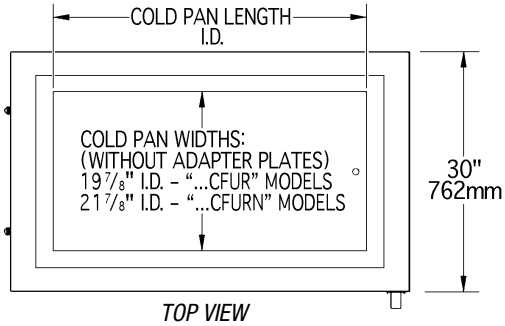

TOP VIEW

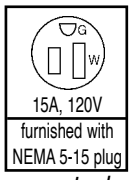

receptacle configuration required

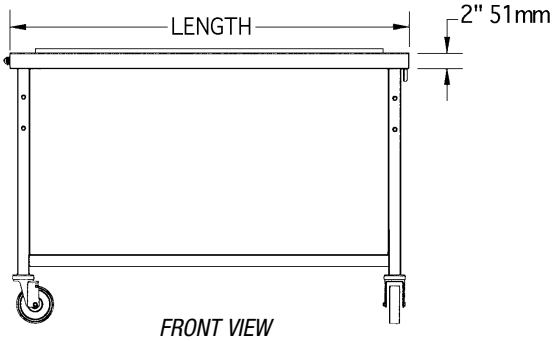

FRONT VIEW

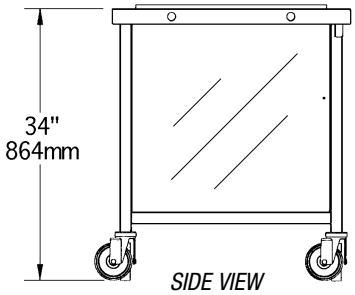

SIDE VIEW
(SHOWN WITH OPTIONAL END PANELS.)

Refrigerated Cold Pan Units with 4⅝″ (117mm) Standard Depth Cold Pans*

model #	electrical data	cold pan width x length in.	cold pan width x length mm	overall length in.	overall length mm	weight lbs.	weight kg	# of pans**
DCS2-CFUR*	120V, 3.9A, 1/5HP	19⅞″ x 25½″	505 x 648	36″	914	210	95.6	2
DCS3-CFUR*	120V, 3.9A, 1/5HP	19⅞″ x 39¼″	505 x 997	50″	1270	260	117.9	3
DCS4-CFUR*	120V, 6.8A, 1/4HP	19⅞″ x 53″	505 x 1346	64″	1626	320	145.2	4
DCS5-CFUR*	120V, 9.8A, 1/3HP	19⅞″ x 66¾″	505 x 1696	78″	1981	370	168.8	5
DCS6-CFUR*	120V, 9.8A, 1/3HP	19⅞″ x 80½″	505 x 2045	96″	2438	460	208.7	6

Refrigerated Cold Pan Units with 9″ (229mm) Full Depth Cold Pans and 3″ (76mm) Recessed Top (NSF-7)

model #	electrical data	cold pan width x length in.	cold pan width x length mm	overall length in.	overall length mm	weight lbs.	weight kg	# of pans**
DCS2-CFURN	120V, 6.0A, 1/4HP	21⅞″ x 27¾″	556 x 705	36″	914	275	124.7	2
DCS3-CFURN	120V, 6.0A, 1/4HP	21⅞″ x 41½″	556 x 1054	50″	1270	325	147.4	3
DCS4-CFURN	120V, 7.8A, 1/3HP	21⅞″ x 54¼″	556 x 1378	64″	1626	385	174.6	4
DCS5-CFURN	120V, 10.7A, 1/2HP	21⅞″ x 69″	556 x 1753	78″	1981	435	197.3	5
DCS6-CFURN	120V, 10.7A, 1/2HP	21⅞″ x 81¾″	556 x 2077	96″	2438	520	235.9	6

* Full depth 9-3/4″ refrigerated cold pan available for these models. To order, add suffix "**-F**" to model number. Example: DSC3-CFUR**-F**
Full depth refrigerated cold pan with side coils available for these models. To order, add suffix "**-FS**" to model number. Example: DSC3-CFUR**-FS**
(Note: Optional full-depth pans not compliant with NSF-7. Check local health codes for applications required.)

****** Cold pan comes with removable adapter bars which, when positioned, accept the "# of pans" noted in chart.
Adapter bars for "-CFUR" cold pans run front-to-back. Adapter bars for "-CFURN" cold pans run front-to-back and end-to-end.

Optional laminate end panels available. To order, add suffix "**-LEP**" to model number. Example: DSC3-CFUR**-LEP**
Optional stainless steel front panel in lieu of laminate front panel available. To order, add suffix "**-S**" to model number. Example: DCS3-CFUR**-S**
Optional stainless steel end panels available. To order, add suffix "**-SEP**" to model number. Example: DSC3-CFUR**-S-SEP**

EAGLE GROUP
100 Industrial Boulevard, Clayton, DE 19938-8903 USA
Phone: 302-653-3000 or 800-441-8440 • Fax: 302-653-2065
www.eaglegrp.com • www.eaglemhc.com

Printed in U.S.A.
©2022 by Eagle Group
Rev. 09/22

Spec sheets available for viewing, printing or downloading from our online literature library at *www.eaglegrp.com*

Although every attempt has been made to ensure the accuracy of the information provided, we cannot be held responsible for typographical or printing errors. Information and specifications are subject to change without notice. Please confirm at time of order.

EAGLE GROUP®

Profit from the Eagle Advantage®

Specification Sheet

Item No.: _____

Project No.: _____

S.I.S. No.: _____

Director's Choice® Hot Food Units

MODELS:

- ❑ ***DCS2-HFU-A***
- ❑ ***DCS2-HFU-B****
- ❑ ***DCS2-HFU-C****
- ❑ ***DCS3-HFU-A***
- ❑ ***DCS3-HFU-B****
- ❑ ***DCS3-HFU-C****
- ❑ ***DCS4-HFU-B****
- ❑ ***DCS4-HFU-C****
- ❑ ***DCS5-HFU-B****
- ❑ ***DCS5-HFU-C****
- ❑ ***DCS6-HFU-B****
- ❑ ***DCS6-HFU-C****

** See chart on back for complete model numbers.*

Short Form Specifications

Eagle Director's Choice® Hot Food Serving Unit, model _____. Top to be 16/304 stainless steel, turned down on all sides. 1½″ square type 304 stainless steel all-welded tubular base. Stainless steel apron on operator's side. Fully mobile with 5″ poly tread casters, two with brake. Quick release spring loaded docking device keeps adjoining units together. Fully insulated 12″ x 20″ hot food wells with individual thermostatic controls. Standard laminate front panel is holly berry red (Wilsonart® #D307-60).

Optional drains connect to common manifold to drain at left end with ¾″ ball valve (NPTF) provided.

hot food unit shown with optional single sneeze guard, optional tray slide and optional laminate end panels

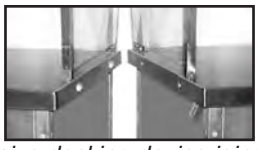

exclusive docking device joins units together without the use of tools

Options / Accessories

- ❑ Laminated end panels
- ❑ Stainless steel end panels
- ❑ Stainless steel front panel
- ❑ Tray slide* - stainless
- ❑ Work shelf**
- ❑ Rear doors and panels***
- ❑ Sneeze guards - single tier
- ❑ Sneeze guards - double tier
- ❑ Display lights for overshelf
- ❑ Removable stainless undershelf
- ❑ Specify laminate _____
- ❑ Individual drains with manifold
- ❑ 12″ x 20″ food pans
- ❑ AutoFill® Water System
- ❑ Custom options (see EG8154)

* Available in solid ribbed, square tubular or round tubular. For front, rear, or ends.
** Available in hardwood, stainless steel, poly, or Richlite®. For front, rear, or ends.
*** Available in hinged, solid, or louvered

Design and Construction Features

- 30″ (762mm) wide top is solid, constructed of 16 gauge type 304 stainless steel, die-formed, welded, polished, and reinforced with hat channel.
- Welded 1½″ (38mm) type 304 stainless steel square tubular base construction.
- Open-base frame features type 304 stainless steel apron on operator's side.
- Three working heights available—see Catalog Sheet EG33.07:
  - 34″ (864mm) standard working height complies with ADA guidelines for accessibility standards.
  - 30″ (762mm) for middle schools.
  - 28″ (711mm) low profile for elementary schools and nursing/healthcare facilities.
- Fully mobile - standard 5″ (127mm) poly tread casters, two with brake (brake casters on server side).
- Tray slide heights available – see Catalog Sheet EG33.07:
  - 31″ (787mm) standard height for high schools.
  - 27″ (686mm) standard height for middle schools.
  - 25″ (635mm) height for elementary schools and nursing/healthcare facilities.
- Wired to cord and plug. Single-phase and three-phase units available.
- Standard front holly berry red (Wilsonart® D307-60) laminate mounted on 18 gauge galvanized subpanel.
- Quick-release spring-loaded docking device keeps adjoining units together without the use of tools.
- All units accommodate optional accessories, including tray slides, work shelves, and removable undershelves. See Catalog Sheet EG33.07.

Certifications / Approvals

NSF (CUSTOM) UL

AUTOQUOTES

KCL

EAGLE GROUP
100 Industrial Boulevard, Clayton, DE 19938-8903 USA
Phone: 302-653-3000 • Fax: 302-653-2065
www.eaglegrp.com

Foodservice Division: Phone 800-441-8440
MHC/Retail Display Divisions: Phone 800-637-5100

For custom configuration or fabrication needs, contact our **SpecFAB® Division.**
Phone: 302-653-3000 • Fax: 302-653-2065 • e-mail: quotes@eaglegrp.com

EG33.02 Rev. 10/14

Spec sheets available for viewing, printing or downloading from our online literature library at *www.eaglegrp.com*

Eagle Foodservice Equipment, Eagle MHC, SpecFAB®, and Retail Display are divisions of Eagle Group. ©2014 by the Eagle Group

EAGLE GROUP®
Profit from the Eagle Advantage®

Item No.: _____
Project No.: _____
S.I.S. No.: _____

Director's Choice® Hot Food Units

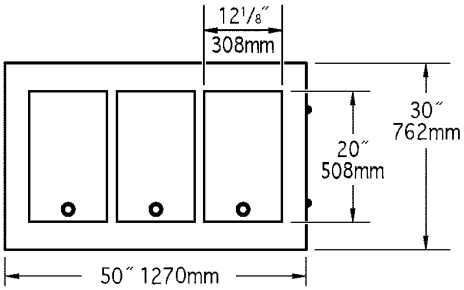

TOP VIEW

Please note:
50″ (1270mm) model shown with optional drains.

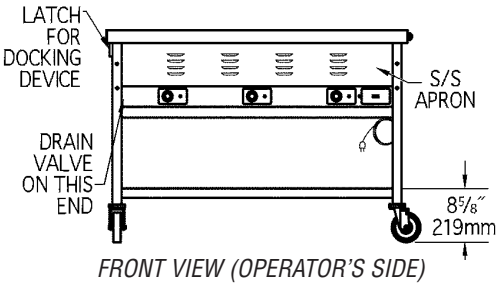

FRONT VIEW (OPERATOR'S SIDE)

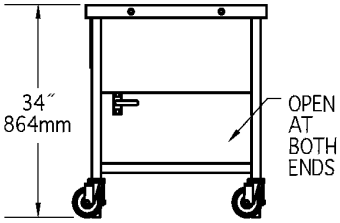

SIDE VIEW

Receptacle configuRations RequiRed

30 AMP 120V **model #** DCS2-HFU-A furnished with NEMA 5-30 plug	50 AMP 120V **model #** DCS3-HFU-A furnished with NEMA 5-50 plug	15 AMP 240V **model #** DCS2-HFU-B furnished with NEMA 6-15 plug	20 AMP 240V **model #** DCS2-HFU-C DCS3-HFU-B furnished with NEMA 6-20 plug
30 AMP 240V **model #** DCS3-HFU-C DCS4-HFU-B furnished with NEMA 6-30 plug	50 AMP 240V **model #** DCS4-HFU-C DCS5-HFU-B DCS5-HFU-C DCS6-HFU-B DCS6-HFU-C furnished with NEMA 6-50 plug	20A 3Ø 240V **model #** DCS2-HFU-B-3 DCS2-HFU-C-3 DCS3-HFU-B-3 DCS3-HFU-C-3 DCS4-HFU-B-3 furnished with NEMA 15-20 plug	20A 3Ø 240V **model #** DCS4-HFU-C-3 DCS5-HFU-B-3 DCS5-HFU-C-3 DCS6-HFU-B-3 DCS6-HFU-C-3 furnished with NEMA 15-30 plug

			Units with Single-Phase						Units with Three-Phase			
# of wells	length in.	length mm	1200W* 120V model #	amps	900/1200W* 208/240V model #	amps	1200/1600W* 208/240V model #	amps	900/1200W* 208/240V model #	amps	1200/1600W* 208/240V model #	amps
2	36″	914	***DCS2-HFU-A***	20.0	***DCS2-HFU-B***	8.7/10.0	***DCS2-HFU-C***	11.5/13.3	***DCS2-HFU-B-3***	7.5/8.7	***DCS2-HFU-C-3***	10.0/11.6
3	50″	1270	***DCS3-HFU-A***	30.0	***DCS3-HFU-B***	13.0/15.0	***DCS3-HFU-C***	17.3/20.0	***DCS3-HFU-B-3***	7.5/8.7	***DCS3-HFU-C-3***	10.0/11.6
4	64″	1626	*n/a*		***DCS4-HFU-B***	17.3/20.0	***DCS4-HFU-C***	23.0/26.7	***DCS4-HFU-B-3***	11.4/13.2	***DCS4-HFU-C-3***	15.3/17.7
5	78″	1981	*n/a*		***DCS5-HFU-B***	21.6/25.0	***DCS5-HFU-C***	28.9/33.4	***DCS5-HFU-B-3***	15.0/17.3	***DCS5-HFU-C-3***	20.0/23.1
6	96″	2438	*n/a*		***DCS6-HFU-B***	26.0/30.0	***DCS6-HFU-C***	34.6/40.0	***DCS6-HFU-B-3***	15.0/17.3	***DCS6-HFU-C-3***	20.0/23.1

* Watts per well.

Individual drain for each well available. Drains connect to common manifold, and drain to left end. ¾″ (19mm)-diameter ball valve provided (NPTF). To order, add suffix "**-D**" to model number. Example: DCS3-HFU-A-**D**

New optional AutoFill® Water System available for units with drains. To order, add "**A**" in front of the first dash in model number. Example: DCS3**A**-HFU-A-D
Optional laminate end panels available. To order, add suffix "**-LEP**" to model number. Example: DCS3-HFU-A-**LEP**
Optional stainless steel front panel in lieu of laminate front panel available. To order, add suffix "**-S**" to model number. Example: DCS3-HFU-A-**S**

Optional stainless steel end panels available. To order, add suffix "**-SEP**" to model number. Example: DCS3-HFU-A-**S-SEP**

EAGLE GROUP
100 Industrial Boulevard, Clayton, DE 19938-8903 USA
Phone: 302-653-3000 • Fax: 302-653-2065
www.eaglegrp.com

Foodservice Division: Phone 800-441-8440
MHC/Retail Display Divisions: Phone 800-637-5100

Printed in U.S.A.
©2014 by Eagle Group
Rev. 10/14

Spec sheets available for viewing, printing or downloading from our online literature library at *www.eaglegrp.com*

Although every attempt has been made to ensure the accuracy of the information provided, we cannot be held responsible for typographical or printing errors. Information and specifications are subject to change without notice. Please confirm at time of order.

ADVANCE TABCO
SMART FABRICATION™

STAINLESS STEEL

OPEN BASE STYLE ENCLOSED BASE WORK TABLES

NSF

Item #: _____ Qty #: _____
Model #: _____
Project #: _____

Flat Top

1 1/2" Backsplash

5" Backsplash

FEATURING BOLT-ON STAINLESS STEEL LEG

	L	FLAT TOP	1 1/2" SPLASH	5" SPLASH	Approx. Wt.	Approx. Cu. Ft.
24" WIDE	36"	EB-SS-243	EF-SS-243	EK-SS-243	135 lbs.	30
	48"	EB-SS-244	EF-SS-244	EK-SS-244	170 lbs.	38
	60"	EB-SS-245	EF-SS-245	EK-SS-245	205 lbs.	47
	72"	EB-SS-246	EF-SS-246	EK-SS-246	242 lbs.	56
	84"	EB-SS-247	EF-SS-247	EK-SS-247	282 lbs.	66
	96"	EB-SS-248	EF-SS-248	EK-SS-248	317 lbs.	74
	108"	EB-SS-249	EF-SS-249	EK-SS-249	360 lbs.	83
	120"	EB-SS-2410	EF-SS-2410	EK-SS-2410	400 lbs.	92
	144"	EB-SS-2412	EF-SS-2412	EK-SS-2412	470 lbs.	109
30" WIDE	36"	EB-SS-303	EF-SS-303	EK-SS-303	145 lbs.	35
	48"	EB-SS-304	EF-SS-304	EK-SS-304	182 lbs.	45
	60"	EB-SS-305	EF-SS-305	EK-SS-305	220 lbs.	55
	72"	EB-SS-306	EF-SS-306	EK-SS-306	260 lbs.	66
	84"	EB-SS-307	EF-SS-307	EK-SS-307	315 lbs.	76
	96"	EB-SS-308	EF-SS-308	EK-SS-308	358 lbs.	87
	108"	EB-SS-309	EF-SS-309	EK-SS-309	400 lbs.	97
	120"	EB-SS-3010	EF-SS-3010	EK-SS-3010	440 lbs.	107
	144"	EB-SS-3012	EF-SS-3012	EK-SS-3012	518 lbs.	128
36" WIDE	36"	EB-SS-363	EF-SS-363	EK-SS-363	160 lbs.	41
	48"	EB-SS-364	EF-SS-364	EK-SS-364	206 lbs.	53
	60"	EB-SS-365	EF-SS-365	EK-SS-365	252 lbs.	65
	72"	EB-SS-366	EF-SS-366	EK-SS-366	297 lbs.	77
	84"	EB-SS-367	EF-SS-367	EK-SS-367	342 lbs.	90
	96"	EB-SS-368	EF-SS-368	EK-SS-368	440 lbs.	102
	108"	EB-SS-369	EF-SS-369	EK-SS-369	490 lbs.	114
	120"	EB-SS-3610	EF-SS-3610	EK-SS-3610	540 lbs.	126
	144"	EB-SS-3612	EF-SS-3612	EK-SS-3612	640 lbs.	151

FEATURES:

FLAT TOP is furnished with a 1 5/8" sanitary rolled rim on the front and
1 5/8" square bend edges on the 2 sides and rear.

1 1/2" SPLASH is furnished with a 1 5/8" sanitary rolled rim on the front side and 1 5/8" square bend edges on the 2 sides and a 1 1/2" splash of single metal thickness on the rear side.

5" SPLASH is furnished with a 1 5/8" sanitary rolled rim on the front side and 1 5/8" square bend edges on the 2 sides and a 5" splash with a 1" return on the rear side.

Rear flush panel along the rear of the base unit.

CONSTRUCTION:

All TIG welded. Exposed areas finished to match adjacent surfaces.

Entire Top is mechanically polished to a satin finish and is sound deadened.

Hat section secured to Top reinforces and maintains level working surface.

UNI-BODY DESIGN sides, back and fixed mid shelf (sold separately) are welded to form a single rigid structure.

Legs bolt on to table base.

MATERIAL:

TOP is 14 gauge stainless steel type "304" series with galvanized understructure.

BODY is 18 gauge stainless steel type "430" series.

LEGS are stainless steel and include 1 1/2" adjustable hex foot.

Mid Shelves Are Available.
To Add a Fixed Mid Shelf, Add "M" After each Model Number.
Upgrade to Adjustable Mid Shelf. Add TA-116.

ADVANCE TABCO
SMART FABRICATION™
www.advancetabco.com

Customer Service Available To Assist You 1-800-645-3166 8:30 am - 8:00 pm E.S.T.

For Orders & Customer Service:
Email: customer@advancetabco.com or **Fax:** 631-242-6900

For Smart Fabrication™ Quotes:
Email: smartfab@advancetabco.com or **Fax:** 631-586-2933

REF-N

DETAILS and SPECIFICATIONS

TOL ± .500” Units 7’ and larger are furnished with 6 legs. ALL DIMENSIONS ARE TYPICAL

EB-Series **Flat Top**

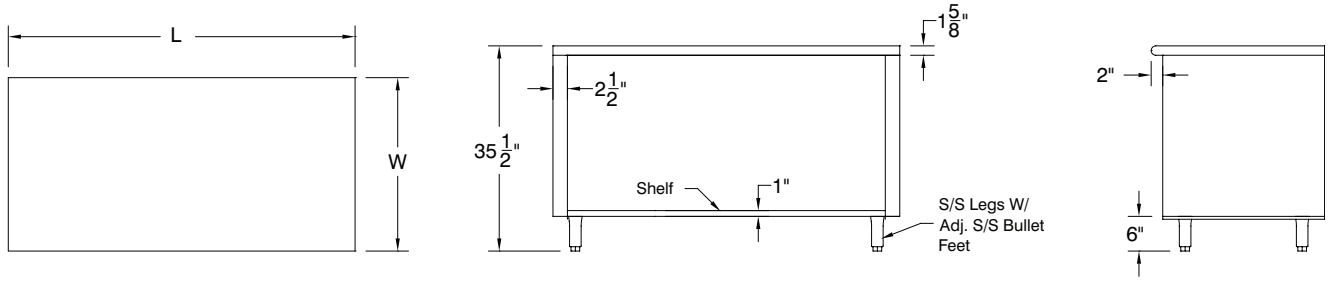

EF-Series **1 1/2” Rear Splash**

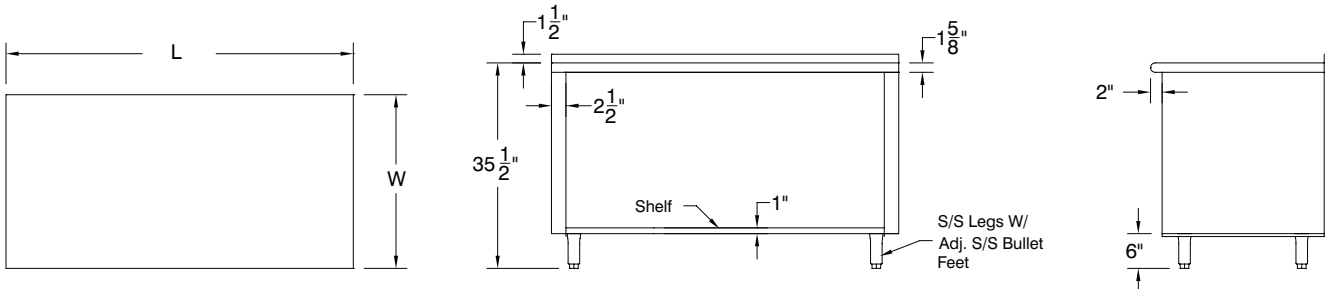

EK-Series **5” Rear Splash**

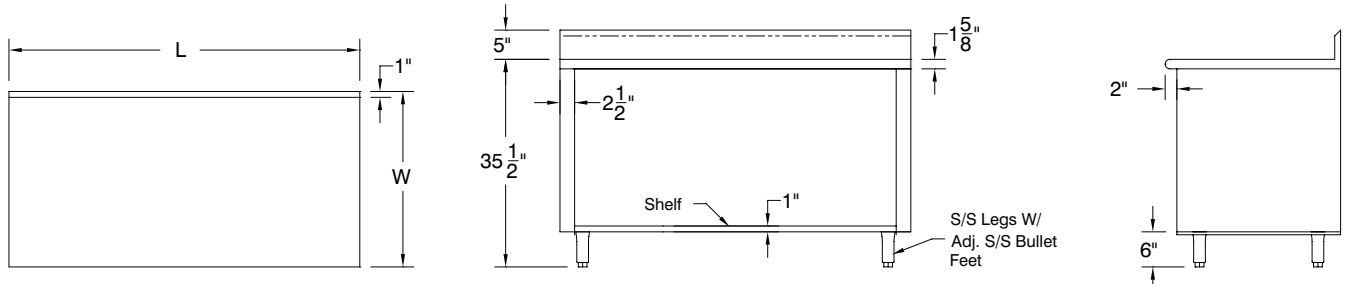

OPTIONAL MID SHELF DETAILS

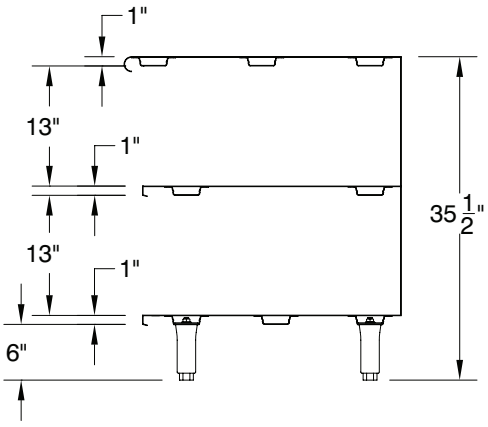

OPTIONAL ENCLOSED BASE MODIFICATIONS & ACCESSORIES

____ **TA-19L** ..... Replacement Bolt-on Leg With Flanged Bullet Foot
____ **TA-20L** ..... Replacement Bolt-on Leg
____ **TA-42** ..... Interior Partition, 2-1/2” x 30” (each)
____ **TA-46** ..... Door Locks
____ **TA-54** ..... Removable Kick Plate
____ **TA-116**..... Cabinet Mid Shelf* (Sold Separately)
____ **TA-118**..... Partial Mid Shelf (Sold Separately)
____ **TA-255P** ..... 5” Heavy Duty Polyurethane Casters (Set of 4 - 2 w/ Brakes)
____ **TA-255AP**.... 5” Heavy Duty Polyurethane Casters (Set of 6 - 2 w/ Brakes)

TA-46

TA-20L

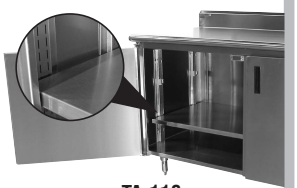
TA-116

Shelves Over 36” In Length Require Multiple Sections With Center Partition.

ADVANCE TABCO
SMART FABRICATION™

ADVANCE TABCO is constantly engaged in a program of improving our products. Therefore, we reserve the right to change specifications without prior notice.

REF-N 325 Wireless Boulevard, Hauppauge, NY 11788

© ADVANCE TABCO, MAY 2019

ADVANCE TABCO
SMART FABRICATION™

STAINLESS STEEL

OPEN BASE STYLE ENCLOSED BASE WORK TABLES

NSF

Item #: _____ Qty #: _____
Model #: _____
Project #: _____

Flat Top

1 1/2" Backsplash

5" Backsplash

FEATURING BOLT-ON STAINLESS STEEL LEG

	L	FLAT TOP	1 1/2" SPLASH	5" SPLASH	Approx. Wt.	Approx. Cu. Ft.
24" WIDE	36"	EB-SS-243	EF-SS-243	EK-SS-243	135 lbs.	30
	48"	EB-SS-244	EF-SS-244	EK-SS-244	170 lbs.	38
	60"	EB-SS-245	EF-SS-245	EK-SS-245	205 lbs.	47
	72"	EB-SS-246	EF-SS-246	EK-SS-246	242 lbs.	56
	84"	EB-SS-247	EF-SS-247	EK-SS-247	282 lbs.	66
	96"	EB-SS-248	EF-SS-248	EK-SS-248	317 lbs.	74
	108"	EB-SS-249	EF-SS-249	EK-SS-249	360 lbs.	83
	120"	EB-SS-2410	EF-SS-2410	EK-SS-2410	400 lbs.	92
	144"	EB-SS-2412	EF-SS-2412	EK-SS-2412	470 lbs.	109
30" WIDE	36"	EB-SS-303	EF-SS-303	EK-SS-303	145 lbs.	35
	48"	EB-SS-304	EF-SS-304	EK-SS-304	182 lbs.	45
	60"	EB-SS-305	EF-SS-305	EK-SS-305	220 lbs.	55
	72"	EB-SS-306	EF-SS-306	EK-SS-306	260 lbs.	66
	84"	EB-SS-307	EF-SS-307	EK-SS-307	315 lbs.	76
	96"	EB-SS-308	EF-SS-308	EK-SS-308	358 lbs.	87
	108"	EB-SS-309	EF-SS-309	EK-SS-309	400 lbs.	97
	120"	EB-SS-3010	EF-SS-3010	EK-SS-3010	440 lbs.	107
	144"	EB-SS-3012	EF-SS-3012	EK-SS-3012	518 lbs.	128
36" WIDE	36"	EB-SS-363	EF-SS-363	EK-SS-363	160 lbs.	41
	48"	EB-SS-364	EF-SS-364	EK-SS-364	206 lbs.	53
	60"	EB-SS-365	EF-SS-365	EK-SS-365	252 lbs.	65
	72"	EB-SS-366	EF-SS-366	EK-SS-366	297 lbs.	77
	84"	EB-SS-367	EF-SS-367	EK-SS-367	342 lbs.	90
	96"	EB-SS-368	EF-SS-368	EK-SS-368	440 lbs.	102
	108"	EB-SS-369	EF-SS-369	EK-SS-369	490 lbs.	114
	120"	EB-SS-3610	EF-SS-3610	EK-SS-3610	540 lbs.	126
	144"	EB-SS-3612	EF-SS-3612	EK-SS-3612	640 lbs.	151

FEATURES:

FLAT TOP is furnished with a 1 5/8" sanitary rolled rim on the front and
1 5/8" square bend edges on the 2 sides and rear.

1 1/2" SPLASH is furnished with a 1 5/8" sanitary rolled rim on the front side and 1 5/8" square bend edges on the 2 sides and a 1 1/2" splash of single metal thickness on the rear side.

5" SPLASH is furnished with a 1 5/8" sanitary rolled rim on the front side and 1 5/8" square bend edges on the 2 sides and a 5" splash with a 1" return on the rear side.

Rear flush panel along the rear of the base unit.

CONSTRUCTION:

All TIG welded. Exposed areas finished to match adjacent surfaces.

Entire Top is mechanically polished to a satin finish and is sound deadened.

Hat section secured to Top reinforces and maintains level working surface.

UNI-BODY DESIGN sides, back and fixed mid shelf (sold separately) are welded to form a single rigid structure.

Legs bolt on to table base.

MATERIAL:

TOP is 14 gauge stainless steel type "304" series with galvanized understructure.

BODY is 18 gauge stainless steel type "430" series.

LEGS are stainless steel and include 1 1/2" adjustable hex foot.

Mid Shelves Are Available.
To Add a Fixed Mid Shelf, Add "M" After each Model Number.
Upgrade to Adjustable Mid Shelf. Add TA-116.

ADVANCE TABCO
SMART FABRICATION™
www.advancetabco.com

Customer Service Available To Assist You 1-800-645-3166 8:30 am - 8:00 pm E.S.T.

For Orders & Customer Service:
Email: customer@advancetabco.com or **Fax:** 631-242-6900

For Smart Fabrication™ Quotes:
Email: smartfab@advancetabco.com or **Fax:** 631-586-2933

REF-N

DETAILS and SPECIFICATIONS

TOL ± .500” Units 7’ and larger are furnished with 6 legs. ALL DIMENSIONS ARE TYPICAL

EB-Series **Flat Top**

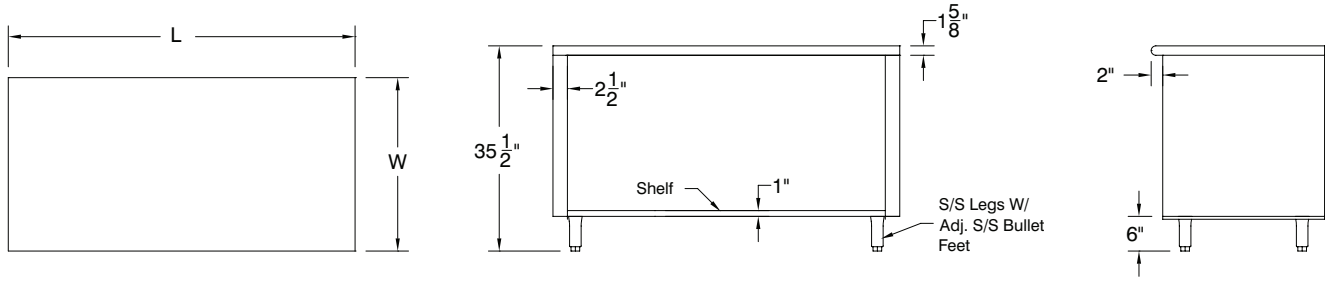

EF-Series **1 1/2” Rear Splash**

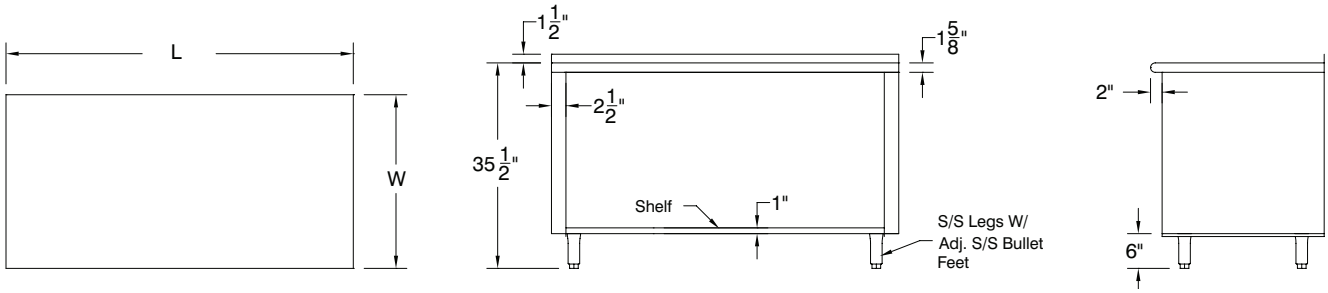

EK-Series **5” Rear Splash**

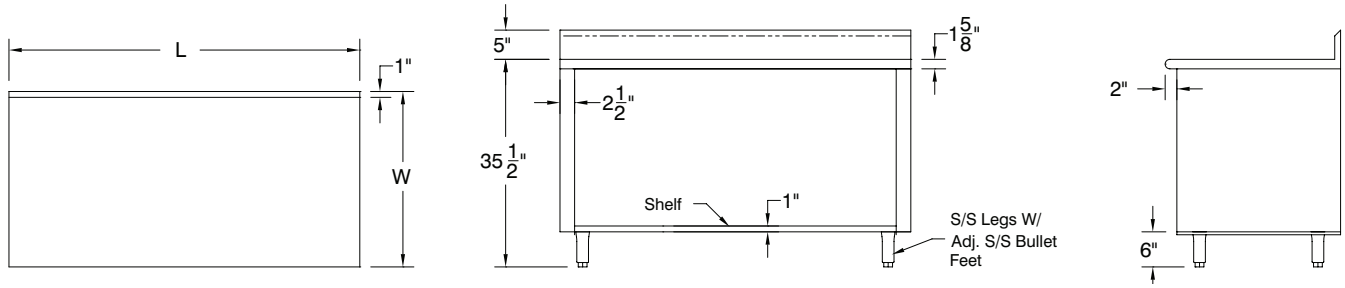

OPTIONAL MID SHELF DETAILS

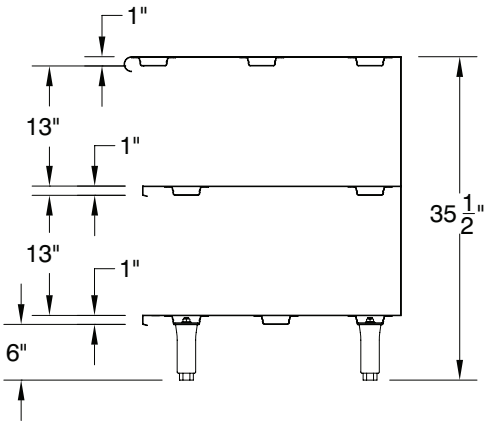

OPTIONAL ENCLOSED BASE MODIFICATIONS & ACCESSORIES

____ **TA-19L** ..... Replacement Bolt-on Leg With Flanged Bullet Foot
____ **TA-20L** ..... Replacement Bolt-on Leg
____ **TA-42** ..... Interior Partition, 2-1/2” x 30” (each)
____ **TA-46** ..... Door Locks
____ **TA-54** ..... Removable Kick Plate
____ **TA-116**..... Cabinet Mid Shelf* (Sold Separately)
____ **TA-118**..... Partial Mid Shelf (Sold Separately)
____ **TA-255P** ..... 5” Heavy Duty Polyurethane Casters (Set of 4 - 2 w/ Brakes)
____ **TA-255AP**.... 5” Heavy Duty Polyurethane Casters (Set of 6 - 2 w/ Brakes)

TA-46

TA-20L

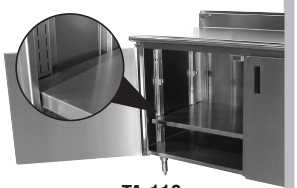
TA-116

Shelves Over 36” In Length Require Multiple Sections With Center Partition.

ADVANCE TABCO
SMART FABRICATION™

ADVANCE TABCO is constantly engaged in a program of improving our products. Therefore, we reserve the right to change specifications without prior notice.

REF-N 325 Wireless Boulevard, Hauppauge, NY 11788

© ADVANCE TABCO, MAY 2019

Profit from the Eagle Advantage®

Specification Sheet

Item No.: _____
Project No.: _____
S.I.S. No.: _____

Director's Choice® Cashier Units

MODELS:

- ❑ *DCS-CUI-24*
- ❑ *DCS-CUI-36*
- ❑ *DCS-CUER-24*
- ❑ *DCS-CUER-36*
- ❑ *DCS-CUEL-24*
- ❑ *DCS-CUEL-36*
- ❑ *DC24-TS-**
- ❑ *DC2-TS-**
- ❑ *366456*
- ❑ *366457*
- ❑ *366458*

** See charts on back page for complete model numbers.*

Short Form Specifications

Eagle Director's Choice® Cashier Units, model _____. Top to be 16/304 stainless steel turned down on all sides. 1½″ square type 304 stainless steel all-welded tubular base. Fully mobile with 5″ poly tread casters, two with brake. Quick release spring loaded docking device keeps adjoining units together. Integrated foot rest, locking cash drawer with handle, integrated stainless steel apron, and 2½″ diameter grommeted hole. Standard laminate front panel is holly berry red (Wilsonart® #D307-60).

inline cashier unit shown with optional tray slide and optional laminate end panels

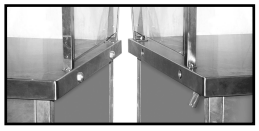

exclusive docking device joins units together without the use of tools

Options / Accessories

- ❑ Laminated end panels
- ❑ Stainless steel end panels
- ❑ Stainless steel front panel
- ❑ Stainless steel tray slide*
- ❑ Removable stainless undershelf
- ❑ Specify laminate _____
- ❑ Cash trays & tray covers
- ❑ Convenience outlet (120V)
- ❑ Low-voltage raceway

* Available in solid ribbed, square tubular or round tubular. For front and ends.

Design and Construction Features

- 30″ (762mm) wide top is solid, constructed of 16 gauge type 304 stainless steel, die-formed, welded, polished, and reinforced with hat channel.
- Welded 1½″ (38mm) type 304 stainless steel square tubular base construction.
- Open-base frame features type 304 stainless steel apron on operator's side.
- Standard flush-fitting drawer with keyed tumbler lock – 18″ x 20⁷⁄₁₆″ x 3″ (457 x 519 x 76mm) inner dimensions. Drawer features double-pan front and recessed pull.
- Fully mobile - standard 5″ (127mm) poly tread casters, two with brake (brake casters on server side).
- Standard front holly berry red (Wilsonart® D307-60) laminate mounted on 18 gauge galvanized subpanel.
- Foot rest welded to frame for extra strength.
- Tray slide heights available—see Catalog Sheet EG33.07A:
  - 31″ (787mm) standard height for high schools.
  - 27″ (686mm) standard height for middle schools.
  - 25″ (635mm) height for elementary schools and nursing/healthcare facilities.
- Quick-release spring-loaded docking device keeps adjoining units together without the use of tools.
- Three configurations available: inline, right end or left end.
- All units accommodate optional accessories, including tray slides and removable undershelves.

EAGLE GROUP
100 Industrial Boulevard
Clayton, DE 19938-8903 USA
Phone: 302-653-3000 • 800-441-8440
Fax: 302-653-2065
www.eaglegrp.com • www.eaglemhc.com

Certifications / Approvals

NSF

AutoQuotes

KCL

For custom configuration or fabrication needs, contact our **SpecFAB® Division.**
Phone: 302-653-3000 • Fax: 302-653-2065 • e-mail: quotes@eaglegrp.com

EG33.03 Rev. 08/22

Spec sheets available for viewing, printing or downloading from our online literature library at *www.eaglegrp.com*

Eagle Foodservice Equipment, Eagle MHC, and SpecFAB® are divisions of Eagle Group. ©2022 by the Eagle Group

EG33.03

Catalog Specification Sheet No.

Director's Choice® Cashier Units

Profit from the Eagle Advantage®

Item No.: _____
Project No.: _____
S.I.S. No.: _____

Director's Choice® Cashier Units

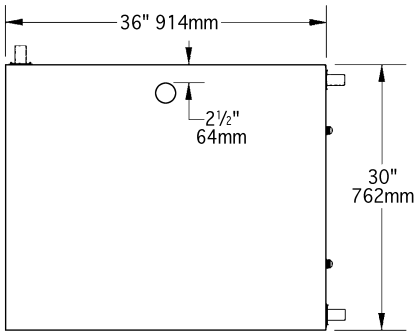

TOP VIEW

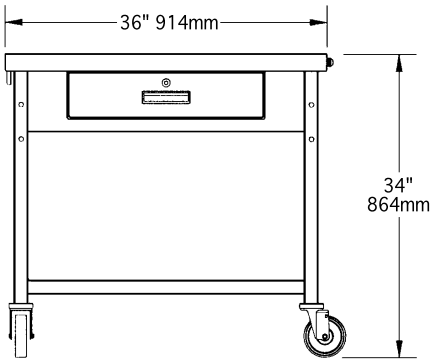

FRONT VIEW (OPERATOR'S SIDE)

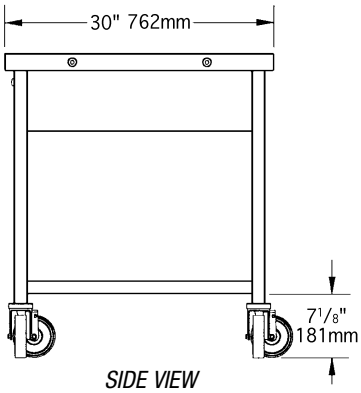

SIDE VIEW

length in.	length mm	weight lbs.	weight kg	Inline model #	Right End* model #	Left End** model #
24″	610	235	106.6	***DCS-CUI-24***	***DCS-CUER-24***	***DCS-CUEL-24***
36″	914	285	129.3	***DCS-CUI-36***	***DCS-CUER-36***	***DCS-CUEL-36***

* Drawer is located on right end as viewed from Server Side of Director's Choice®.
** Drawer is located on left end as viewed from Server Side of Director's Choice®.

Optional laminate end panels available. To order, add suffix "**-LEP**" to model number. Example: DCS-CUI-24**-LEP**
Optional stainless steel front panel in lieu of laminate front panel available. To order, add suffix "**-S**" to model number . Example: DCS-CUI-24**-S**
Optional stainless steel end panels available. To order, add suffix "**-SEP**" to model number. Example: DCS-CUI-24-S**-SEP**

Optional Tray Slides

11½″-wide. With stainless steel drop brackets.

fits	Square Tubular model #	Round Tubular model #	Solid Ribbed model #
24″ (610mm) Cashier "End" Units	***DC24-TS-TS***	***DC24-TS-TSR***	***DC24-TS-SRS***
all 36″ (914mm) Cashier Units	***DC2-TS-TS***	***DC2-TS-TSR***	***DC2-TS-SRS***

Optional Cash Trays and Covers

Fits inside drawer. Lightweight but constructed of durable ABS thermoplastic.

model #	description
366458	4-bill tray
366456	5-bill tray
366457	cover for 5-bill tray

EAGLE GROUP
100 Industrial Boulevard, Clayton, DE 19938-8903 USA
Phone: 302-653-3000 or 800-441-8440 • Fax: 302-653-2065
www.eaglegrp.com • www.eaglemhc.com

Printed in U.S.A.
©2022 by Eagle Group
Rev. 08/22

Spec sheets available for viewing, printing or downloading from our online literature library at *www.eaglegrp.com*

Although every attempt has been made to ensure the accuracy of the information provided, we cannot be held responsible for typographical or printing errors. Information and specifications are subject to change without notice. Please confirm at time of order.

Project _____

AIA # _____ SIS # _____

Item # _____ Quantity _____ C.S.I. Section 114000

VC44G SERIES

Double Deck Gas Convection Ovens

SELL SHEET

Model VC44GD
Shown on optional casters

SPECIFIER STATEMENT

Double section gas convection oven, Vulcan Model No. (VC44GD) (VC44GC). Stainless steel front, sides, top and legs. Independently operated stainless steel doors with double pane windows. Non-sag insulation applied to the top, rear, sides, bottom and doors. Porcelain enamel on steel oven interiors measures 29"w x 22⅛"d x 20"h. Two interior oven lights per section. Five nickel plated oven racks per section measure 28¼" x 20½". Eleven position nickel plated rack guides with positive rack stops. One 50,000 BTU/hr. burner per section. 100,000 total BTU/hr. Electronic spark igniters. Furnished with a two speed ½ H.P. oven blower-motor per section. Oven cool switch for rapid cool down. 120 volt, 60 Hz, 1 ph power supply required. 6' cord and plug. 7.7 amps total draw per section.

Exterior Dimensions:
40¼" W x 40" D (includes motor & door handles)
40¼" W x 37¾" D (includes motor only)
70" H on 8" legs

CSA design certified. NSF listed.

Specify type of gas when ordering.
Specify altitude when above 2,000 FT.

MODELS

- ❑ **VC44GD** Solid state temperature controls adjust from 150° to 500°F. 60 minute timer with audible alarm.
- ❑ **VC44GC** Computer controls with digital time and temperature readouts. 99-hour timer with audible alarm. Roast and Hold cycle. One hundred programmable menu selections. Shelf I.D. programming.

Double deck ovens are supplied as separate units with a stacking kit.

STANDARD FEATURES

- Stainless steel front, sides, top and legs
- Independently operated stainless steel doors with double pane windows
- 50,000 BTU/hr. burner per section, 100,000 BTU/hr. total
- Electronic spark igniters
- ½ H.P. two speed oven blower-motor. 120/60/1 with 6' cord and plug; 7.7 amps per section; 15.4 amps total draw
- Oven cool switch for rapid cool down
- Porcelain enamel on steel oven interior
- Five nickel plated grab-and-go oven racks with eleven rack positions per section (10 total racks)
- ¾" rear gas connection with combination gas pressure regulator and safety solenoid system
- One year limited parts and labor warranty

OPTIONS

- ❑ Kosher friendly control package
- ❑ Complete prison package
  - ❑ Security screws only
- ❑ 208V or 240V, 60 Hz, 1 ph, two speed, ½ H.P. blower motor; 208V, 4.2 amps; 240V, 3.6 amps
- ❑ Casters
- ❑ Simultaneous chain driven doors
- ❑ Control panel mounted on left side of oven
- ❑ Stainless steel rear enclosure
- ❑ Second year extended limited parts and labor warranty

ACCESSORIES (PACKAGED AND SOLD SEPARATELY)

- ❑ Extra oven rack(s)
- ❑ Rack hanger(s)
- ❑ Stainless steel drip pan
- ❑ Flexible gas hose with quick disconnect and restraining device; consult price book for available sizes
- ❑ Down draft flue diverter for direct vent connection

Approved by_____ Date_____ Approved by_____ Date_____

Printed in U.S.A. Vulcan • 3600 North Point Blvd, Baltimore, MD 21222 • Phone: 800-814-2028 • Fax: 800-444-0602 • www.vulcanequipment.com F32434 (05/23)

VC44G SERIES
Double Deck Gas Convection Ovens

INSTALLATION INSTRUCTIONS

1. A combination gas pressure regulator and safety solenoid valve system is included in this unit. Natural gas is 5.0" W.C., Propane gas is 10.0" W.C.
2. An adequate ventilation system is required for commercial cooking equipment. Information may be obtained by visiting the National Fire Protection Association website at https://www.nfpa.org/. Refer to NFPA No. 96.
3. These units are manufactured for installation in accordance with ANSZ223.1A (latest edition), National Fuel Gas Code. Information may be obtained from The American Gas Association website at https://www.aga.org/.
4. Clearances:

	Combustible	Non-combustible
Rear	0"	0"
Right Side	2"	0"
Left Side	1"	0"

5. This appliance is manufactured for commercial installation only and is not intended for home use.
6. The installation location should not experience temperatures below -20°C (-4°F).

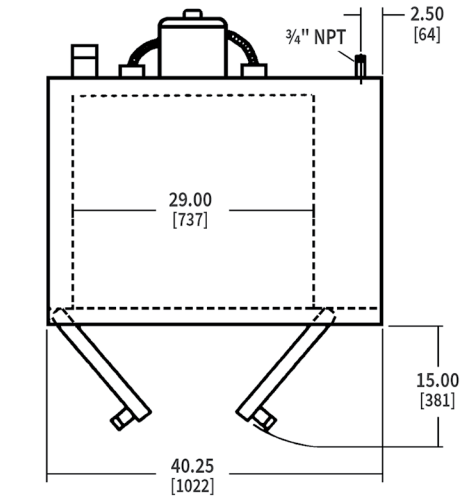

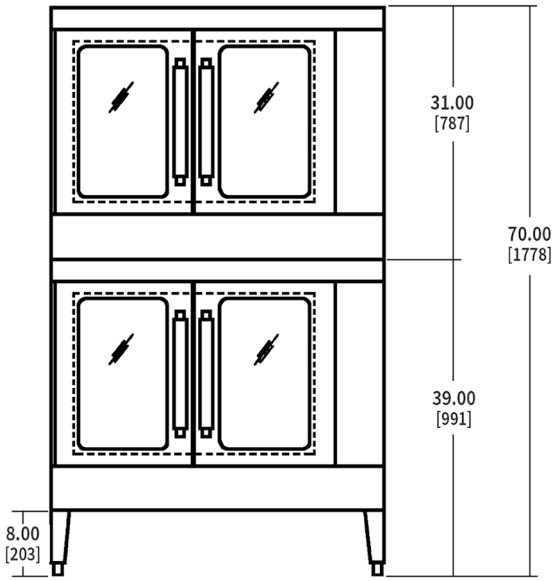

CAD and/or Revit Files Available

INSTALLATION MANUAL

40¼" W x 41⅛" D (includes motor & door handles)
40¼" W x 37¾" D (includes motor only)
70" H on 8" legs

Oven interior: 29" W x 22⅛" D x 20" H

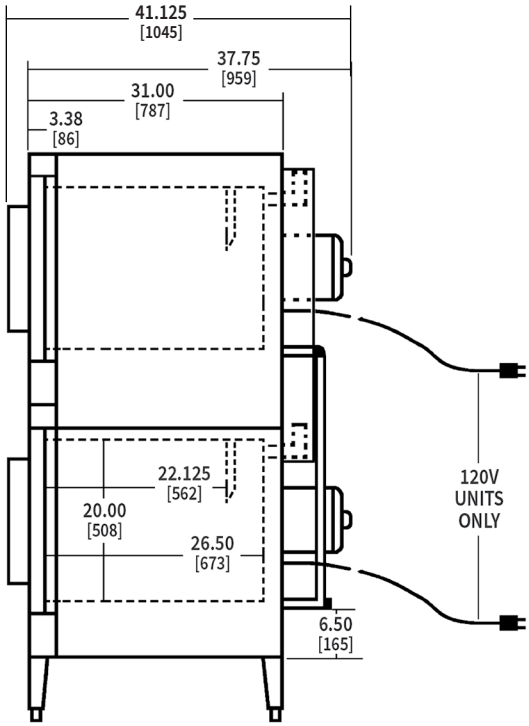

Model	Width	Depth w/handles	Height	Per Oven BTU/hr.	Total BTU/hr.	Electrical	Weight
VC44G	40¼"	41⅛"	70"	50,000	100,000	120/60/1	820 lbs (372 KG) without skids/packaging 928 lbs (422 KG) with skids/packaging

As continued product improvement is a policy of Vulcan, specifications are subject to change without notice.

GENESIS

GAS HOT PLATE

G12CT-12B | G24CT-24B | G36CT-36B
G48CT-48B | G60CT-60B | G72CT-72B

G48CT-48B

c UL us LISTED

CLASSIFIED UL EPH
Certified to ANSI/NSF4

Overview

The Genesis Series Range is the only gas range offering both high-efficiency and high performance burner innovation. The burners' unique design improves your cooking experience while significantly reducing gas consumption. 100% vertically manufactured utilizing sustainable raw materials. Our Genesis Series Ranges are built to meet the demands of high volume commercial kitchens and provide a great overall cooking experience!

STANDARD FEATURES

- 3-year warranty parts and labor.
- Patented, award-winning high efficiency 2-piece cast iron non-clog & self-cleaning burners rated at 22,000 BTU/h (NAT & LP) p/ burner (same cooking time as 32,000~33,000 BTU/h).
- 14 gauge fully welded interlocking frame.
- Chrome-plated aluminum knobs.
- Adjustable 4" chrome-plated steel legs.
- Stainless steel flex gas tube throughout.
- Stainless steel front and sides.
- Removable crumb drawer under burners.
- One pilot light for each burner.
- Heavy-duty 12" x 12" removable cast-iron grates.
- Front-mounted manual gas shutoff to entire range.
- Stainless steel crumb tray is welded and sealed for maximum durability and ease of cleaning.
- Chrome-plated aluminum knobs.
- Sides with double wall insulation.

STANDARD ACCESSORIES

- Installation kit (pressure regulating valve).
- Propane gas (LP) conversion kit.

OPTIONS & ACCESSORIES

- ☐ Modular front pan rail for 1/6 pans.
- ☐ Stainless steel equipment stand.
- ☐ Cutting board.
- ☐ 12-72" Stands.
- ☐ Pilot lighter.

VENANCIO | INNOVATIVE HIGH-PERFORMANCE COMMERCIAL COOKING EQUIPMENT

Florida Office
4726 NW 2nd Avenue | Suite F1 | Boca Raton, FL 33431
sales@venanciousa.com +1 (954) 367 7846
www.venanciousa.com

GAS HOT PLATE

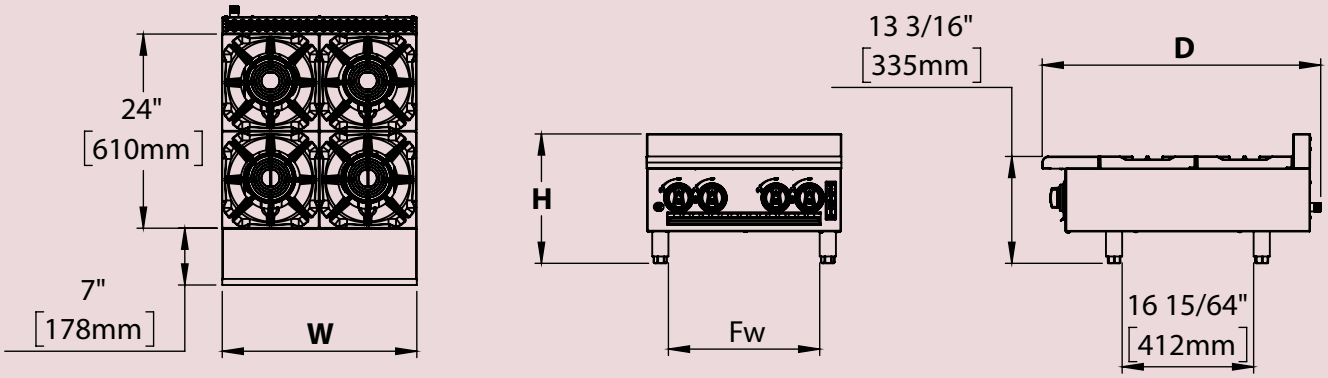

TOP VIEW FRONT VIEW SIDE VIEW

Model	Exterior Product Dimensions & Weight					Shipping Crate Dimensions & Weight			
	Width (W)	Depth (D)	Height (H)	Fw	Net weight	Width	Depth	Height	Gross weight
G12CT – 12B	12" (305mm)	34" (864mm)	15 15/16" (405mm)	7 1/4" (184mm)	115 lb (52 kg)	24" (610mm)	37 13/32" (950mm)	22 27/32" (580mm)	143 lb (65 kg)
G24CT – 24B	24" (610mm)	34" (864mm)	15 15/16" (405mm)	19 1/4" (489mm)	198 lb (90 kg)	28 1/16" (715mm)	37 13/32" (950mm)	22 27/32" (580mm)	245 lb (111 kg)
G36CT – 36B	36" (915mm)	34" (864mm)	15 15/16" (405mm)	31 1/4" (794mm)	282 lb (128 kg)	40 1/32" (1020mm)	37 13/32" (950mm)	22 27/32" (580mm)	346 lb (157 kg)
G48CT – 48B	48" (1220mm)	34" (864mm)	15 15/16" (405mm)	43 1/4" (1099mm)	366 lb (166 kg)	52 1/16" (1325mm)	37 13/32" (950mm)	22 27/32" (580mm)	441 lb (200 kg)
G60CT – 60B	60" (1525mm)	34" (864mm)	15 15/16" (405mm)	26 21/32" (677mm)	454 lb (206 kg)	64 1/16" (1630mm)	37 13/32" (950mm)	22 27/32" (580mm)	545 lb (247 kg)
G72CT – 72B	72" (1830mm)	34" (864mm)	15 15/16" (405mm)	32 41/64" (829mm)	540 lb (245 kg)	76 1/16" (1935mm)	37 13/32" (950mm)	22 27/32" (580mm)	646 lb (293 kg)

UTILITY INFORMATION

GAS SUPPLY					
MODEL	BURNERS	PROPANE	NATURAL	MANIFOLD PRESSURE	
		BTU/h	BTU/h	Propane gas	Natural gas
G12CT – 12B	2	44,000	44,000	10" W.C	4" W.C
G24CT – 24B	4	88,000	88,000		
G36CT – 36B	6	132,000	132,000		
G48CT – 48B	8	176,000	176,000		
G60CT – 60B	10	220,000	220,000		
G72CT – 72B	12	264,000	264,000		

SPECIFICATIONS

- 3/4" NPT rear gas connection and pressure regulator for both natural gas and propane.
- Check the altitude specifications above 2,000 ft.
- Specify the type of gas when ordering.

INSTALLATION INSTRUCTIONS

The gas line connecting to the appliance must be 3⁄4" or larger. If flexible connectors are used, the inside diameter must be 3⁄4" or larger. An adequate ventilation system is required for commercial cooking equipment. Intended for commercial use only, not for household use. Check local codes for fire, installation, and sanitary regulations. Information may be obtained by writing to the National Fire Protection Association, 1 Batterymarch Park, Quincy, MA 02269, www.NFPA.org. When writing, refer to NFPA No. 96.4. These units are manufactured for installation in accordance with ANSI Z223.1A (latest edition), National Fuel Gas Code. Copies may be obtained from The American Gas Association, 400 N Capitol St. NW, Washington, DC 20001, www.AGA.org.

Venancio continuously improves the design of its products, therefore reserves the right to change specifications at any time without prior notice. Such revisions do not entitle the buyer to corresponding changes, improvements, additions or replacements for previously purchased equipment.

VENANCIO | INNOVATIVE HIGH-PERFORMANCE COMMERCIAL COOKING EQUIPMENT
Rev. 02 07/2024

Florida Office
4726 NW 2nd Avenue | Suite F1 | Boca Raton, FL 33431
sales@venanciousa.com +1 (954) 367 7846
www.venanciousa.com

VENANCIO | INNOVATIVE HIGH-PERFORMANCE COMMERCIAL COOKING EQUIPMENT

Item: _____ Model #:_____
Quantity (Qty): _____ Project:_____

Stand With Tray Restaurant

EST 18" | EST 24" | EST 36" | EST 48" | EST 60" | EST 72"

EST 36"

Venâncio Professional **Stand With Tray** were developed to meet the diverse needs of everyday life in the kitchen, combined with a high standard of quality and durability, seeking to meet the needs of a professional kitchen.

STANDARD FEATURE

- Available in widths of 18” (458mm), 24” (610mm), 36” (915mm), 48”(1220mm), 60”(1525mm) and 72” (1830mm).
- Fully welded structure ensuring stability, resistance and durability.
- Tubular structure in stainless steel.
- Stainless steel base, panel and sides.
- Stainless steel tray.
- Lower base adjustment.
- 6” (152mm) highly polished chrome adjustable steel legs.

OPTIONS & ACCESSORIES

☐ Product installation kit (1/2" x 2" screws and 1/2"washers).

☐ Kit of castors 6 "(152mm).

AREA FOR CONSULTANT / CONTRACTOR:

Prime Cabinet with Door

Rev. 02 06/2022

VENANCIO | INNOVATIVE HIGH-PERFORMANCE COMMERCIAL COOKING EQUIPMENT

Venancio
Florida Office
4726 NW 2nd Avenue | Suite F1 | Boca Raton, FL 33431
sales@venanciousa.com - (1) 954 367 7846
www.venanciousa.com

VENANCIO | INNOVATIVE HIGH-PERFORMANCE COMMERCIAL COOKING EQUIPMENT

Stand With Tray Restaurant

EST 18" | EST 24" | EST 36" | EST 48" | EST 60" | EST 72"

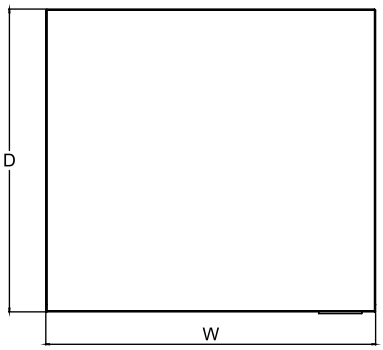

TOP VIEW

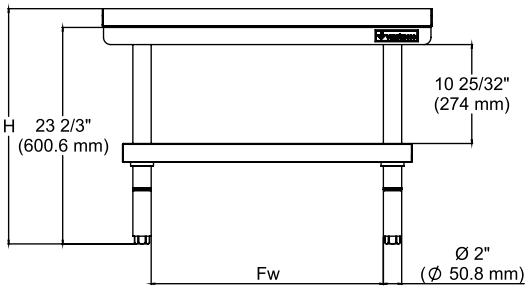

FRONT VIEW

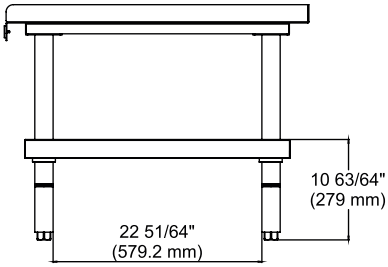

SIDE VIEW

Models	Exterior Product Dimensions & Weight					Shipping Crate Dimension & Weight			
	Width (W)	Depth (D)	Height (H)	Fw	Weight	Width	Depth	Height	Weight
EST 18	18" (457mm)	33 5/64" (840mm)	25 23/32" (652.6mm)	7 23/64" (187mm)	58 lb (26 kg)	20 5/64" (510mm)	35 9/32" (896mm)	11 3/16" (284mm)	89 lb (40 kg)
EST 24	24" (610mm)			13 11/32" (339mm)	69 lb (31 kg)	29 21/64" (745mm)			106 lb (48 kg)
EST 36	36" (915mm)			25 23/32" (644mm)	89 lb (40 kg)	38 5/64" (967mm)			137 lb (62 kg)
EST 48	48" (1220mm)			37 23/64" (949mm)	100 lb (45 kg)	50 5/64" (1272mm)			159 lb (72 kg)
EST 60	60" (1525mm)			2 x 23 45/64" (2 x 602mm)	146 lb (66 kg)	62 3/32" (1577mm)			223 lb (101 kg)
EST 72	72" (1830mm)			2 x 29 11/16" (2 x 754mm)	164 lb (74 kg)	74 3/32" (1882mm)			258 lb (117 kg)

UTILITY INFORMATION

- To assemble the product Venâncio Professional on the Easel with Tray (EST), you only need to position the product on the easel.
- The bottom base must not be removed from the stand with, because in addition to being useful for storing condiments, it has the functionality of supporting the structure.
- In the lower base it is possible to adjust the height of the same as the client needs.
- The installation of the Stand With together with the installation of the table product must be performed by a trained professional.
- Total warranty of 12 months, with 03 months of legal guarantee, plus 09 months extended.

CLEARANCES REQUIREMENTS

- Combustible and non-combustible surfaces: there is no need for distance on the sides and rear.
- Consult spacing requirements for table products installed on the stand with.

MISCELANEOUS

- Install under Venâncio Professional countertop product.
- Before carrying out the installation, consult the manual.
- Intended for commercial use only. Not for household use.

Stand With Tray Restaurant

Rev. 02 06/2022

VENANCIO | INNOVATIVE HIGH-PERFORMANCE COMMERCIAL COOKING EQUIPMENT

Venancio
Florida Office
4726 NW 2nd Avenue | Suite F1 | Boca Raton, FL 33431
sales@venanciousa.com - (1) 954 367 7846
www.venanciousa.com

TRUE FOOD SERVICE EQUIPMENT, INC. • 2001 East Terra Lane • O'Fallon, Missouri 63366-4434
ph. 636.240.2400 • toll free 800.325.6152 • fax 636.272.2408 • parts fax 636.272.9471 • www.truemfg.com

Project Name	Location		AIA #
Item #	Qty	Model #	SIS #

SPEC SERIES®

ROLL-IN SOLID SWING DOOR FREEZER

models	STR2FRI-2S	STA2FRI-2S	STG2RRI-2S

STR2FRI-2S	
Exterior	Stainless steel door, front & sides.
Interior	Stainless steel side walls, back, floor, door liner, & ceiling.

STA2FRI-2S	
Exterior	Stainless steel door, front & sides.
Interior	Aluminum side walls & back. Stainless steel floor & ceiling.

STG2FRI-2S	
Exterior	Stainless steel door, with matching aluminum sides.
Interior	Aluminum side walls & back. Stainless steel floor & ceiling.

plan view

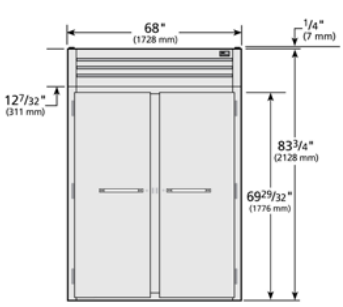

ELEVATION

RIGHT VIEW

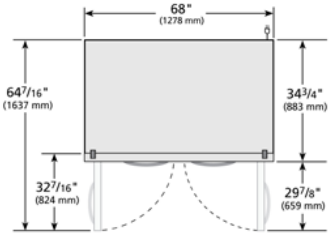

PLAN VIEW

Specifications subject to change without notice.
Chart dimensions are roundedup to the nearest ⅛" (millimeters rounded up to the next whole number).

SPECIFICATIONS

Dimensions	in.	mm.
Length	68	1728
Depth	34¾	883
Height	83¾	2128
Electrical	**U.S.**	**International**
Horsepower	1⅕	N/A
Amps	8.0	N/A
Voltage	115/208-230/60	
NEMA	14-20P	
Cord Length	9 ft.	2.74 M.

115/208-230/1
NEMA-14-20R

† Depth does not include 4¼" (108 mm) for ramp.
* Height does not include 1" (26 mm) for system mechanical components.
Note: Requires 115/208-230/60Hz, single phase, 3 pole, 4 wire circuit.

8/14 Printed in U.S.A.

Approvals

Available at

TRUE FOOD SERVICE EQUIPMENT, INC. • 2001 East Terra Lane • O'Fallon, Missouri 63366-4434
ph. 636.240.2400 • toll free 800.325.6152 • fax 636.272.2408 • parts fax 636.272.9471 • www.truemfg.com

Project Name	Location		AIA #
Item #	Qty	Model #	SIS #

SPEC SERIES®

ROLL-IN SOLID SWING DOOR FREEZER

models	STR2FRI-2S	STA2FRI-2S	STG2FRI-2S

standard features

REFRIGERATION SYSTEM

- Factory engineered, self-contained, capillary tube system using environmentally friendly (CFC free) 404A refrigerant.
- Extra large evaporator coil balanced with higher horsepower compressor and large condenser maintains -10°F (-23.3°C) cabinet temperature. Ideal for both frozen foods and ice cream.
- Sealed, cast iron, self-lubricating evaporator fan motors and larger fan blades give True roll-in's a more efficient low velocity, high volume airflow design. This unique design ensures faster temperature recovery and shorter run times in the busiest of foodservice environments.
- Top mounted refrigeration system with evaporator positioned out of food zone to maximize capacity.
- Automatic defrost system time-initiated, temperature-terminated. Saves energy consumption and provides shortest possible defrost cycle.
- Automatic evaporator fan motor delay during defrost cycle.

CABINET CONSTRUCTION

- Insulation - entire cabinet structure and solid door are foamed-in-place using Ecomate. A high density, polyurethane insulation that has zero ozone depletion potential (ODP) and zero global warming potential (GWP).
- Designed to accept roll-in racks (inboard castors) with maximum dimensions of 27"L x 29"D x 66"H (686 mm x 737 mm x 1677 mm) (supplied by others).
- One (1) heavy gauge stainless steel ramp.

DOORS

- Lifetime guaranteed bolt style door locks standard.
- Lifetime guaranteed heavy duty all metal working door handle.
- Positive seal self-closing door with 120° stay open feature. Lifetime guaranteed external cam lift door hinges, Three (3) per door section.
- Magnetic door gasket of one piece construction, removable without tools for ease of cleaning.

LIGHTING

- Incandescent interior lighting, safety shielded.

MODEL FEATURES

- Exterior digital temperature display, available with either °F or °C .
- Evaporator epoxy coated to eliminate the potential of corrosion
- Backguard improves airflow.
- Interior bumpers protect cabinet walls from abuse caused by roll-in carts.
- NSF-7 compliant for open food product.

ELECTRICAL

- Unit completely pre-wired at factory and ready for final connection to a 115/208-230/60Hz single phase, 3 pole, 4 wire, 20 amp dedicated outlet. Cord and plug set included.

OPTIONAL FEATURES/ ACCESSORIES

(upcharge & lead times may apply)

- Stainless back. (STR, STA, STG)
- Field reversable hinge

WARRANTY*
Three year warranty on all parts and labor and an additional 2 year warranty on compressor. (U.S.A. only)

*RESIDENTIAL APPLICATIONS: TRUE assumes no liability for parts or labor coverage for component failure or other damages resulting from installation in non-commercial or residential applications.

METRIC DIMENSIONS ROUNDED UP TO THE NEAREST WHOLE MILLIMETER

SPECIFICATIONS SUBJECT TO CHANGE WITHOUT NOTICE

Model	Elevation	Right	Plan	3D	Back
ST( )2FRI-2S					

OPEN AIR MERCHANDISERS
VERTICAL · 28" DEEP · SHORT

EOMV-36-B-28-S EOMV Series

2 YEARS PARTS & LABOR
5 YEARS ELECTRICAL
5 YEARS COMPRESSOR
WARRANTY

Refrigeration System
· Bottom mounted, self-contained and fully detachable Blizzard R290 condensing unit uses environmentally friendly, EPA-compliant R290 refrigerant with zero (0) Ozone Depletion Potential (ODP) and three (3) Global Warming Potential (GWP). Blizzard R290 is easily replaceable and requires no on-site brazing.
· Front air intake and rear air discharge design allows side by side installation.
· Electronically commutated (ECM) evaporator fan motors achieve rapid cooling with less energy consumption.
· High performance, auto-reverse condenser fan motor supports compressor ventilation and condenser coil cleaning.
· Large capacity, corrosion-resistant condenser and evaporator coils.
· Self-maintaining, energy-efficient condensate drain pan requires no external drains or electric heaters.
· Pre-wired and ready to plug, 115V/60Hz/1Ph, NEMA 5-20P.

Cabinet Construction
· Black modern exterior has moisture-resistant panels and field replaceable tempered glass.
· Heavy-duty stainless steel interior has perforated back wall for efficient air flow. Includes floor drains for ease of cleaning.
· Front stainless steel bumper belt protects against shopping cart impact.
· Galvanized steel top, bottom and rear.
· 2.5" thick high-density polyurethane insulation.
· Integrated retractable night curtain saves energy and provides security.
· 5" swivel casters with locks on front set. Leg stabilizers included.

Lighting
· Shielded LED bar lighting under shelves and canopy provide bright, high color illumination at lower heat output. On/off switch saves energy

Shelving
· Adjustable by height and angle. Position it flat or slanted downward at 10°.
· Heavy duty stainless steel shelves include price tag moldings.

Temperature Control
· Factory preset temperature of 35°F maintains a combined average product temperature of 40°F or less.
· Audible overheat protection alarm for compressor and condenser coil.

Recommended Operating Conditions
· Conforms to NSF standard 7 TYPE II designed to operate in an air-conditioned environment where temperature and humidity do not exceed 80°F and 55% respectively.
· Must not be installed near ventilation systems, fans or exterior doors or windows that will disrupt the air curtain.
· Must not be installed in direct sunlight.
· In built-in applications, a distance of 6" is required on the front, back and top exterior for ventilation purposes

Type	Capacity Cu. Ft.	Shelves	NEMA Plug	Refrigerant	HP	Power V-Hz-Ph	Amps	Crated Weight	Exterior Dimensions		
									L	D	H*
REF	9.3	3	NEMA 5-20P	R-290	3/4	115-60-1	7	524 lbs	37.25"	28.38"	60.13"

(†)Based on evaporating temperature of 23°F (-5°C) & condensing temperature of 131°F (55°C). (⚑) Product capacity is calculated based on standard industry figures. (✻) Reference plan view for clarification on caster/unit height. If dimensions and capacity are critical, please contact Everest Refrigeration. Blizzard R290 replacement is at the sole discretion of Everest Refrigeration. Specifications subject to change without notice.

VER. 10/23/2024 201 W. Artesia Blvd., Compton, CA 90220 T. (310) 323-6586 F. (310) 323-7524

OPEN AIR MERCHANDISERS
VERTICAL · 28" DEEP · SHORT

EOMV-36-B-28-S EOMV Series

DIMENSIONAL DATA

External Dims.	L	37.25 in.
	D	28.38 in.
	H*	60.13 in.
Crated Weight		524 lbs.
Doors/Drawers/Lids		-
Max Weight Support		-

STORAGE DATA

Net Capacity Cu. Ft. ⚑	9.3
Shelves	3
Barrels	-
20 oz. Bottles	-
12 oz. Bottles	-
12 oz. Cans	-
8" Mugs	-
# of Pans (Top)	-
# of Pans (Drawer)	-
Dividers	-
Trays	-

ELECTRICAL DATA

Voltage	115-60-1
Full Load Amperage	7A
Feed Wires w/ Ground	3
Cord Length	9ft
NEMA Plug Type	NEMA 5-20P

REFRIGERATION DATA

Compressor	Bottom
Refrigerant	R-290
Compressor HP	3/4
BTU/HR†	-

KEY

D	Door	R	Refrigerator
L	Lid	REF	Refrigerator
H	Half Door	F	Freezer
FD	Full Door	FRZ	Freezer
SD	Solid Door	DUAL	REF/FRZ Combo
GD	Glass Door	DR	Drawer

	Elevation	Right	Plan	3D	Back
KCL					

PLAN VIEW

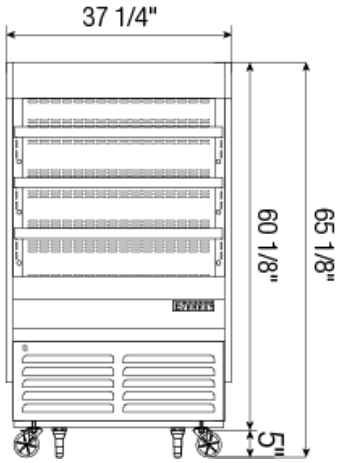

FRONT

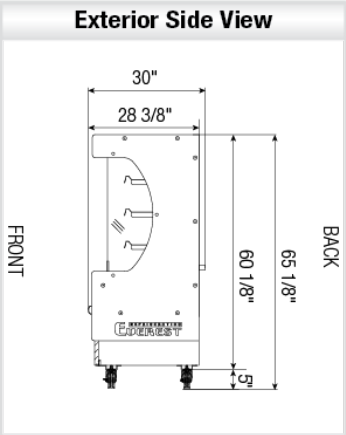

SIDE

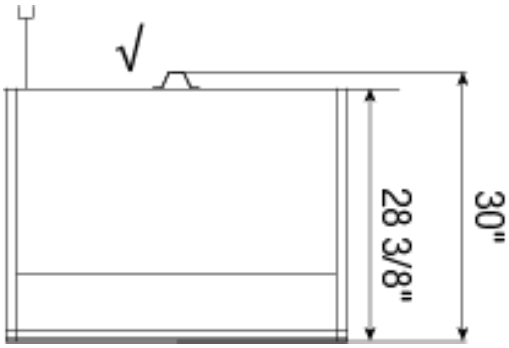

TOP

ACCESSORIES & OPTIONS

- ☐ AJLA3-00 - Interchangeable Leg for Caster (Optional)
- ☐ CASA3-01 - 3" Overall Height Caster Assembly - (2) Front (2) Rear

(†)Based on evaporating temperature of 23°F (-5°C) & condensing temperature of 131°F (55°C). (⚑) Product capacity is calculated based on standard industry figures. (*) Reference plan view for clarification on caster/unit height. If dimensions and capacity are critical, please contact Everest Refrigeration. Blizzard R290 replacement is at the sole discretion of Everest Refrigeration. Specifications subject to change without notice.

VER. 10/23/2024 201 W. Artesia Blvd., Compton, CA 90220 T. (310) 323-6586 F. (310) 323-7524

TRUE FOOD SERVICE EQUIPMENT, INC. • 2001 East Terra Lane • O'Fallon, Missouri 63366-4434
ph. 636.240.2400 • toll free 800.325.6152 • fax 636.272.2408 • parts fax 636.272.9471 • www.truemfg.com

Project Name	Location		AIA #
Item #	Qty	Model #	SIS #

SPEC SERIES®

REACH-IN SOLID SWING DOOR REFRIGERATOR WITH HYDROCARBON REFRIGERANT

models	STR2R-2S-HC	STA2R-2S-HC	STG2R-2S-HC

STR2R-2S-HC

Exterior	Stainless steel door, front & sides.
Interior	Stainless steel side walls, back, floor, door liner, & ceiling.
Shelving	(1) Interior kit option included per full section.

STA2R-2S-HC

Exterior	Stainless steel door, front & sides.
Interior	Aluminum side walls & back. Stainless steel floor & ceiling.
Shelving	(3) Heavy duty, crome plated, wire shelves per section.

STG2R-2S-HC

Exterior	Stainless steel door, with matching aluminum sides.
Interior	Aluminum side walls & back. Stainless steel floor & ceiling.
Shelving	(3) Heavy duty, PVC coated, wire shelves per section.

plan view

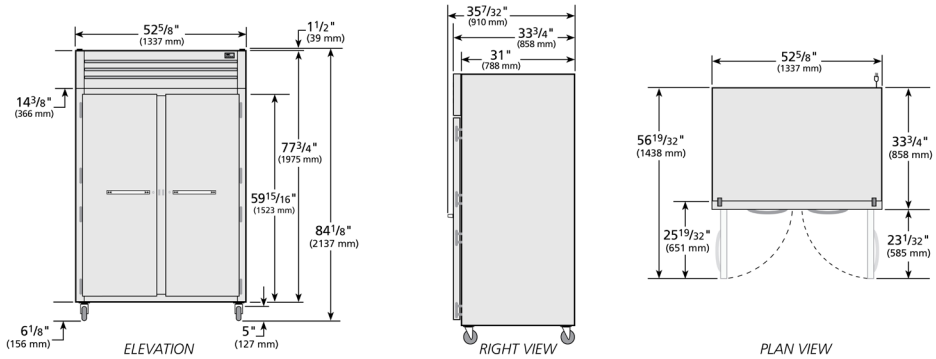

SPECIFICATIONS

Dimensions	in.	mm.
Length	52⅝	1337
Depth	33¾	858
Height	77¾	1975
Electrical	**U.S.**	**International**
Horsepower	½	N/A
Amps	5.9	N/A
Voltage	115/60/1	
NEMA	5-15P	
Cord Length	9 ft.	2.74 M.

115/60/1
NEMA-5-15R

* Height does not include 6⅛" (156 mm) for castors or 6" (153 mm) for optional legs.
† Depth does not include 1½ for door handle.

Specifications subject to change without notice.
Chart dimensions are roundedup to the nearest ⅛" (millimeters rounded up to the next whole number).

MADE WITH INNOVATION IN THE USA · 5 YEAR COMPRESSOR WARRANTY USA · ENERGY STAR · natural refrigerant

12/18 Printed in U.S.A.

Approvals

Available at

TRUE FOOD SERVICE EQUIPMENT, INC. • 2001 East Terra Lane • O'Fallon, Missouri 63366-4434
ph. 636.240.2400 • toll free 800.325.6152 • fax 636.272.2408 • parts fax 636.272.9471 • www.truemfg.com

Project Name	Location		AIA #
Item #	Qty	Model #	SIS #

SPEC SERIES®

REACH-IN SOLID SWING DOOR REFRIGERATOR WITH HYDROCARBON REFRIGERANT

models	STR2R-2S-HC	STA2R-2S-HC	STG2R-2S-HC

standard features

REFRIGERATION SYSTEM

- Factory engineered, self-contained, capillary tube system using environmentally friendly R290 hydrocarbon refrigerant that has zero (0) ozone depletion potential (ODP), & three (3) global warming potential (GWP).
- High capacity, factory balanced refrigeration system that maintains cabinet temperatures of 33°F to 38°F (.5°C to 3.3°C) for the best in food preservation.
- State of the art, electronically commutated evaporator and condenser fan motors. ECM motors operate at higher peak efficiencies and move a more consistent volume of air which produces less heat, reduces energy consumption and provides greater motor reliability.
- Top mounted refrigeration system with evaporator positioned out of food zone to maximize capacity.
- Electronic control.

CABINET CONSTRUCTION

- Insulation - entire cabinet structure and solid door are foamed-in-place using Ecomate. A high density, polyurethane insulation that has zero ozone depletion potential (ODP) and zero global warming potential (GWP).
- 5" (127 mm) diameter plate castors - locks provided on front set.

DOORS

- Lifetime guaranteed bolt style door locks.
- Lifetime guaranteed heavy duty all metal working door handles.
- Positive seal self-closing doors with 120° stay open feature. Lifetime guaranteed external cam lift door hinges, four (4) per door section.
- Magnetic door gaskets of one piece construction, removable without tools for ease of cleaning.

LIGHTING

- LED interior lighting, safety shielded.

MODEL FEATURES

- Exterior digital temperature display, available with either °F or °C .
- Evaporator epoxy coated to eliminate the potential of corrosion.
- Curb mounting ready.
- NSF/ANSI Standard 7 compliant for open food product.

ELECTRICAL

- Unit completely pre-wired at factory and ready for final connection to a 115/60/1 phase, 15 amp dedicated outlet. Cord and plug set included.

OPTIONAL FEATURES/ ACCESSORIES

(upcharge & lead times may apply)

- 6" (153 mm) standard legs.
- 6" (153 mm) seismic/flanged legs.
- 6" (153 mm) stainless steel legs.
- Field reversible hinge.
- Additional shelves.
- Stainless back. (STR, STA, STG)
- Security package.

SHELVING KIT OPTIONS

- STR series kits factory installed at no charge. STA & STG series kits field installed, upcharge applies, lead times may apply.
- Kit #1: Nine (9) sets of #1 type tray slides and pilasters (field installed), bottom support of one (1) 18"L x 26"D (458 mm x 661 mm) pan or two (2) 14"L x 18"D (356 mm x 458 mm) pans.
- Kit #2: One (1) set half-section #2 steel rod tray slides and pilasters (field installed), rim support of one (1) 18"L x 26"D (458 mm x 661 mm) pan.
- Kit #3: Six (6) sets of universal type tray slides and pilasters (field installed), bottom support of one (1) 18"L x 26"D (458 mm x 661 mm) pan, two (2) 14"L x 18"D (356 mm x 458 mm) pans or two (2) 12"L x 20"D (305 mm x 508 mm) pans.
- Kit #4: Three (3) chrome shelves 26 5/16"L x 21 9/16"D (669 mm x 548 mm). Optional wall mounted shelf support pilasters (field installed) with four (4) shelf clips per shelf available; adjustable on ½" (13 mm) increments (must order at time of cabinet order).
- Additional kit option components available individually.

WARRANTY
Three year warranty on all parts and labor and an additional 2 year warranty on compressor. (U.S.A. only)

METRIC DIMENSIONS ROUNDED UP TO THE NEAREST WHOLE MILLIMETER

SPECIFICATIONS SUBJECT TO CHANGE WITHOUT NOTICE

Model	Elevation	Right	Plan	3D	Back
ST( )2R-2S-HC					

EAGLE GROUP®

Profit from the Eagle Advantage®

Specification Sheet

Item No.: _____
Project No.: _____
S.I.S. No.: _____

Stainless Steel Fabricated Sinks —S14 Series

Short Form Specifications

Eagle Stainless Steel Fabricated Sink, model _____. Type 304 stainless steel sink throughout. Sink bowls, available in 20″ x 20″ or 28″ x 20″, are coved with full ¾″ radius and feature 14″ water level. Drainboards, when required, shall be "V" creased for positive drainage. 8″-high backsplash with ¾″ upturn and tile edge. Legs to be 1⅝″ O.D. Features stainless steel gussets, front-to-rear and end-to-end stainless steel crossbracing, and adjustable stainless steel bullet feet.

MODELS:

- ❑ ***S14-20-1-SL***
- ❑ ***S14-20-2-18R-SL***
- ❑ ***S14-20-2-18L-SL***
- ❑ ***S14-20-2-18-SL***
- ❑ ***S14-20-3-18R-SL***
- ❑ ***S14-20-3-18L-SL***
- ❑ ***S14-20-3-18-SL***
- ❑ ***S14-20-3-24R-SL***
- ❑ ***S14-20-3-24L-SL***
- ❑ ***S14-20-3-24-SL***
- ❑ ***S14-28-3-18-SL***

#S14-20-3-18-SL sink

Materials

- Sink bowls: 14 gauge type 304 stainless steel.
- Top: Drainboards, backsplash and edging are heavy gauge type 304 stainless steel.
- Legs: 1⅝″ (41mm)-diameter 18 gauge stainless steel tubing with stainless steel gussets and fully adjustable stainless steel bullet feet.
- Crossbracing: 1″ (25mm)-diameter heavy-gauge stainless steel tubing, with aluminum connectors.
- Front apron: 18 gauge stainless steel.

Design and Construction Features

- Sink bowls have minimum radius of ¾″ (19mm), and are rectangular for maximum capacity.
- 20″ x 20″ (508 x 508mm) and 28″ x 20″ (508 x 711mm) bowls available.
- 14″ (356mm) water level is standard.
- Crossbracing runs front-to-back and end-to-end.
- Swirl-away drainage.
- 8″ (203mm) standard backsplash includes ¾″ (19mm) upturn and tile edge for easy installation and feathering to wall/splash surface.
- Leg gussets assemblies welded adjacent to sink bowl(s).
- "V" creased drainboards for positive drainage.

Options / Accessories

- ❑ Lever drain
- ❑ Lever drain with overflow
- ❑ Twist handle drain
- ❑ Overflow hole
- ❑ Faucets

Mechanical:

- Faucet holes are 1⅛″ (30mm)-diameter, punched on 8″ (203mm) centers.
- Basket-type waste drain included fits sink bowls' 3½″ (89mm) centered opening and features 1½″ (38mm) outlet.

Packaging:

- Wooden skid packing.

Certifications / Approvals

NSF

AUTOQUOTES

KCL

EAGLE GROUP
100 Industrial Boulevard, Clayton, DE 19938-8903 USA
Phone: 302-653-3000 • Fax: 302-653-2065
www.eaglegrp.com

Foodservice Division: Phone 800-441-8440
MHC/Retail Display Divisions: Phone 800-637-5100

For custom configuration or fabrication needs, contact our **SpecFAB® Division.**
Phone: 302-653-3000 • Fax: 302-653-2065 • e-mail: quotes@eaglegrp.com

EG20.14 Rev. 02/14

Spec sheets available for viewing, printing or downloading from our online literature library at *www.eaglegrp.com*

Eagle Foodservice Equipment, Eagle MHC, SpecFAB®, and Retail Display are divisions of Eagle Group. ©2014 by the Eagle Group

EAGLE GROUP®
Profit from the Eagle Advantage®

Item No.: _____
Project No.: _____
S.I.S. No.: _____

Stainless Steel Fabricated Sinks—S14 Series

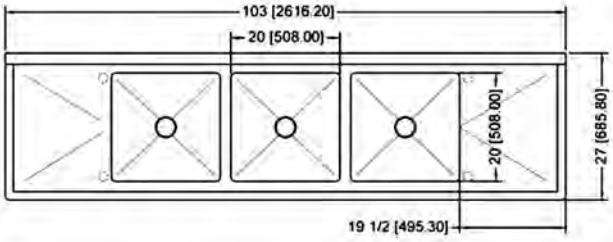

TOP VIEW

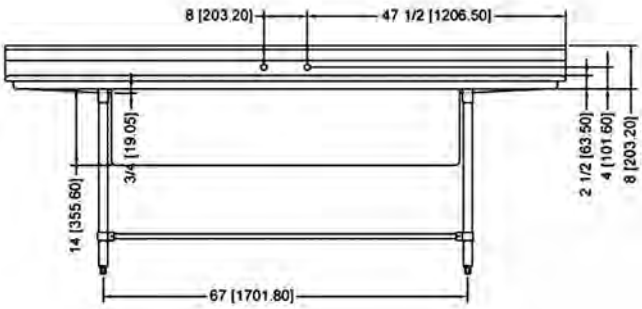

FRONT VIEW

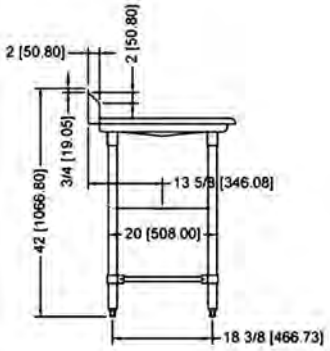

SIDE VIEW

(Note: Model #S14-20-3-18-SL shown)

Sink with One Compartment

model #	bowl dimensions width in.	bowl dimensions width mm	bowl dimensions length in.	bowl dimensions length mm	drainboard quantity	drainboard length in.	drainboard length mm	overall dimensions width in.	overall dimensions width mm	overall dimensions length in.	overall dimensions length mm
S14-20-1-SL	20″	508	20″	508	0	-		27″	686	29″	737

Sinks with Two Compartments

model #	bowl dimensions width in.	bowl dimensions width mm	bowl dimensions length in.	bowl dimensions length mm	drainboard quantity	drainboard length in.	drainboard length mm	overall dimensions width in.	overall dimensions width mm	overall dimensions length in.	overall dimensions length mm
S14-20-2-18R-SL	20″	508	20″	508	1	18″	457	27″	686	67½″	1715
S14-20-2-18L-SL	20″	508	20″	508	1	18″	457	27″	686	67½″	1715
S14-20-2-18-SL	20″	508	20″	508	2	18″	457	27″	686	81″	2057

Sinks with Three Compartments

model #	bowl dimensions width in.	bowl dimensions width mm	bowl dimensions length in.	bowl dimensions length mm	drainboard quantity	drainboard length in.	drainboard length mm	overall dimensions width in.	overall dimensions width mm	overall dimensions length in.	overall dimensions length mm
S14-20-3-18R-SL	20″	508	20″	508	1	18″	457	27″	686	89½″	2273
S14-20-3-18L-SL	20″	508	20″	508	1	18″	457	27″	686	89½″	2273
S14-20-3-18-SL	20″	508	20″	508	2	18″	457	27″	686	103″	2616
S14-20-3-24R-SL	20″	508	20″	508	1	24″	610	27″	686	95½″	2426
S14-20-3-24L-SL	20″	508	20″	508	1	24″	610	27″	686	95½″	2426
S14-20-3-24-SL	20″	508	20″	508	2	24″	610	27″	686	115″	2921
*S14-28-3-18-SL**	28″	711	20″	508	2	18″	457	35″	889	103″	2616

** #S14-28-3-18-SL features two sets of faucet holes.*

EAGLE GROUP
100 Industrial Boulevard, Clayton, DE 19938-8903 USA
Phone: 302-653-3000 • Fax: 302-653-2065
www.eaglegrp.com

Foodservice Division: Phone 800-441-8440
MHC/Retail Display Divisions: Phone 800-637-5100

Printed in U.S.A.
©2014 by Eagle Group
Rev. 02/14

Spec sheets available for viewing, printing or downloading from our online literature library at *www.eaglegrp.com*

Although every attempt has been made to ensure the accuracy of the information provided, we cannot be held responsible for typographical or printing errors. Information and specifications are subject to change without notice. Please confirm at time of order.

EAGLE GROUP®

Profit from the Eagle Advantage®

Specification Sheet

Item No.: _____

Project No.: _____

S.I.S. No.: _____

Table Modifications and Accessories

For complete list of E# models and description, see chart below and chart on back page.

Refer to chart below for description of E# models.

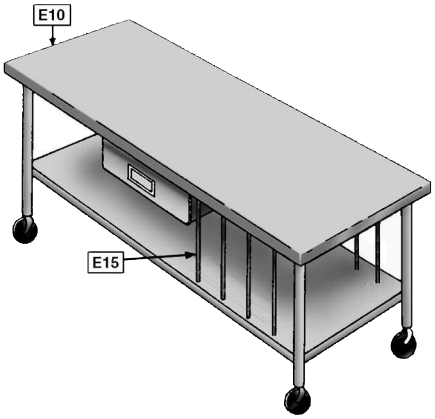

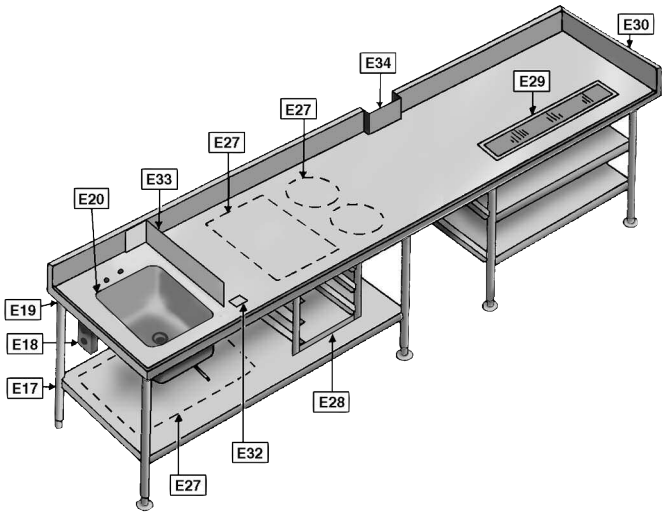

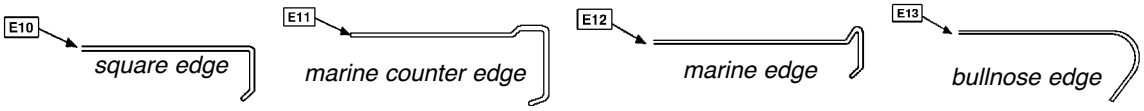

model #	description
E10	Square edge table - front and/or rear
E11	Marine counter edge
E12	"V" type marine edge
E13	Bullnose edge
300698	Casters - 4″ (102mm)-diameter with brake
300699	Casters - 4″ (102mm)-diameter without brake
317635	Casters - 5″ (127mm)-diameter with brake
317636	Casters - 5″ (127mm)-diameter without brake
300692	Bullet feet - stainless steel
301036	Bullet feet - white metal
300293	Bullet feet - plastic

model #	description
313835	Stainless steel flanged bullet feet
E15	Vertical tray dividers - 4-section assembly, 3″ on centers
E17	Special height legs
E18*	Duplex receptacle and mounting plate (under table)
E18.1*	Duplex receptacle in splash (requires at least 6″-high splash)
E18.2*	Pedestal duplex receptacle (top of table or overshelf)
E19	Stainless steel gussets

NOT PICTURED

model #	description
606329	Scrap chute, 6″ (152mm)-diameter
606331	Knife rack (fits rolled rim, poly, and square edge tables)

* For GFI receptacle, add "**-GFI**" to E number (example: E18.1**-GFI**).

EAGLE GROUP
100 Industrial Boulevard, Clayton, DE 19938-8903 USA
Phone: 302-653-3000 • Fax: 302-653-2065
www.eaglegrp.com

Foodservice Division: Phone 800-441-8440
MHC/Retail Display Divisions: Phone 800-637-5100

Certifications / Approvals

NSF

(fabricated to NSF-applicable standards)

AutoQuotes

KCL

For custom configuration or fabrication needs, contact our **SpecFAB® Division.**
Phone: 302-653-3000 • Fax: 302-653-2065 • e-mail: quotes@eaglegrp.com

EG10.50 Rev. 09/18

Spec sheets available for viewing, printing or downloading from our online literature library at *www.eaglegrp.com*

Eagle Foodservice Equipment, Eagle MHC, SpecFAB®, and Retail Display are divisions of Eagle Group. ©2018 by the Eagle Group

EAGLE GROUP
Profit from the Eagle Advantage®

Item No.: _____
Project No.: _____
S.I.S. No.: _____

Table Modifications and Accessories

Refer to chart at right for description of E# models.

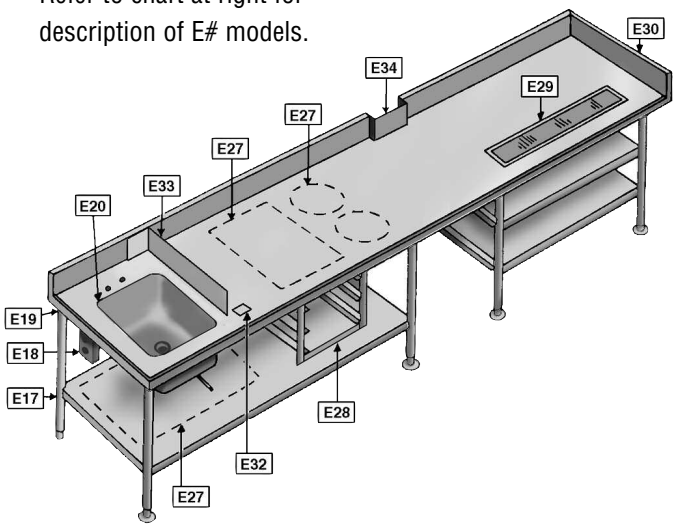

model #	description
Sinks — complete with faucet and basket drain (Specify location)	
E20	- 10″ x 14″ x 9.5″ bowl (254 x 356 x 241mm)
E21	- 14″ x 16″ x 9.5″ bowl (356 x 406 x 241mm)
E22*	- 16″ x 20″ x 8″ bowl (406 x 508 x 203mm)
E23*	- 16″ x 20″ x 14″ bowl (406 x 508 x 356mm)
E24*	- 18″ x 20″ x 14″ bowl (457 x 508 x 356mm)
E24A*	- 20″ x 20″ x 14″ (508 x 508 x 356mm)
E25	- 24″ x 24″ x 14″ bowl (610 x 610 x 356mm) for 36″ (914mm)-wide tables
313304	T&S faucet upgrade - deck mount 4″ (102mm) centers
300720	Lever drain - 1.5″ I.P.S. (38mm)
300721	Lever drain - 2″ I.P.S. (51mm)
300722	Lever drain - 2″ I.P.S. (51mm) with overflow
341189**	Twist handle drain - 1.5″ I.P.S. (38mm)
336002**	Twist handle drain - 2″ I.P.S. (51mm)
341190**	Twist handle drain - 2″ I.P.S. (51mm) with overflow
E27	Top cutout - square or round (Specify location)
E28	Angle slides for pans, up to six pairs (Specify location and pan size)
E29	Urn trough, 4.5″ wide x 1.25″ deep (114 x 32mm) with 1.5″ (38mm) drain, complete with louvered grate. (Length must be maximum of 6″ shorter than table. Specify location.)
E30	End splash — per end (Specify end), all heights
E31	1.5″ (38mm) rear upturn for undershelf
E32	Can opener hole with under table support (Specify location)
E33	Sink splash — single thickness, 4″ tall (102mm)
E34	Column cutout (Send floor plan/sketch)

NOT PICTURED

model #	description
E35	16 gauge s/s apron in front of sinks or cutouts
E36	Fully welded - top, undershelf & legs
E36A	Welded base only - undershelf & legs
E37	NSF sprayed-on sound deadening up to 12′ (3658mm)
E37A	- for each additional foot
E38-6**	Cantilever mount up to 6′ (1829mm)
E38-12**	Cantilever mount up to 12′ (3658mm)
E39	Enclosed backsplash

* These sink bowls will not fit in a table any less than 30″ (762mm) wide.
** Optional twist drain brackets available for use with twist handle drains.
*** Applicable to wall mount shelves and pot racks.

Optional Sinks Built Into Tables – Standard Locations

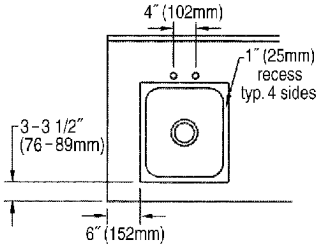

sink on left/right side of table

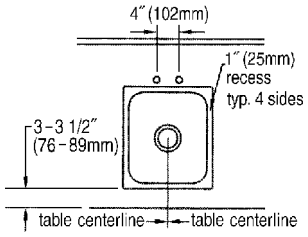

sink on center of table

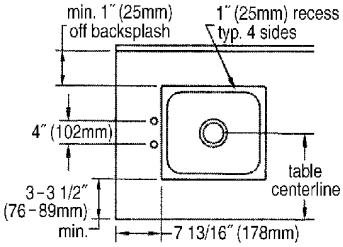

sink with faucet on end of table

EAGLE GROUP
100 Industrial Boulevard, Clayton, DE 19938-8903 USA
Phone: 302-653-3000 • Fax: 302-653-2065
www.eaglegrp.com

Foodservice Division: Phone 800-441-8440
MHC/Retail Display Divisions: Phone 800-637-5100

Printed in U.S.A.
©2018 by Eagle Group
Rev. 09/18

Spec sheets available for viewing, printing or downloading from our online literature library at *www.eaglegrp.com*

Although every attempt has been made to ensure the accuracy of the information provided, we cannot be held responsible for typographical or printing errors. Information and specifications are subject to change without notice. Please confirm at time of order.

SECTION 122496 (TES) – ROLLER WINDOW SHADES

PART 1 - GENERAL

1.1 RELATED DOCUMENTS

A. Drawings and general provisions of the Contract, including General and Supplementary Conditions and Division 01 Specification Sections, apply to this Section.

1.2 SUMMARY

A. This Section includes furnishing and installing interior roller shade systems including manual chain-operated shades, motorized shades where indicated, and all accessories required for a complete installation.

B. Shade system types, fabric types, and locations shall be as indicated on the Drawings.

C. Related Sections:
   1. 061000 Rough Carpentry for blocking
   2. 079200 Joint Sealants
   3. Division 26 for power and control wiring for motorized shades

1.3 SUBMITTALS

A. Product Data for shade systems, hardware, and fabrics.

B. Shop Drawings showing shade locations, sizes, mounting conditions, brackets, and fascia/headbox if used.
   1. Motorized shade submittal shall include motor load data, wiring diagrams, and junction box requirements for coordination with Division 26.

C. Samples of each shade fabric type and color.

D. Warranty documentation.

1.4 QUALITY ASSURANCE

A. Manufacturer shall have a minimum of 5 years experience producing similar shade systems.

B. Installer shall have a minimum of 3 years experience installing roller shades.

C. Shade fabrics shall comply with NFPA 701.

D. Installer shall comply with ANSI/WCMA A100.1 safety requirements for chain-operated systems.

1.5 DELIVERY, STORAGE, AND HANDLING

A. Deliver materials in original packaging.

B. Store in clean, dry, protected spaces and protect from damage.

1.6 PROJECT CONDITIONS

A. Do not fabricate until field measurements are verified.

B. Install shades after completion of painting and adjacent finishes.

1.7 WARRANTY

A. Provide manufacturer's standard warranties.

B. Minimum warranty:
   1. Manual shades: 10 years
   2. Motorized shades and motors: 5 years

PART 2 - PRODUCTS

2.1 MANUFACTURERS

A. Basis of Design – Manual Shades: Draper FlexShade®, chain-operated.
   1. Or Approved Equal.

B. Basis of Design – Motorized Shades: Draper Motorized FlexShade® 485 AC.
   1. Or Approved Equal.

C. Alternate manufacturers may be submitted for approval.

2.2 MANUAL ROLLER SHADE SYSTEM

A. Manual chain-operated roller shade with clutch mechanism.

B. Continuous stainless-steel bead chain with tensioning device compliant with ANSI/WCMA safety requirements.

C. Extruded aluminum roller tube sized to prevent deflection.

D. Steel or aluminum mounting brackets for wall, jamb, or ceiling mount.

E. Fabric-wrapped hem bar.

F. Provide optional aluminum fascia or headbox where indicated on the Drawings.

G. Provide universal brackets capable of supporting either sunscreen or blackout fabric to allow future replacement without hardware modification.

2.3 MOTORIZED ROLLER SHADE SYSTEM (WHERE INDICATED)

A. Motorized roller shade with 120V AC tubular motor; motors shall be compatible with grouping and switching requirements shown on Electrical Drawings.

B. Motor shall include factory-set or field-adjustable limits.

C. Provide brackets, roller tube, hem bar, and fascia/headbox where indicated.

D. All power, switching, control, grouping, and circuiting requirements are shown on Electrical Drawings.

E. Provide required wiring diagrams to Electrical Contractor.

2.4 FABRIC TYPES

A. Sunscreen Fabric (Typical)
   1. Woven screen fabric with openness factor as indicated on Drawings; typical openness 3% unless otherwise noted.
   2. Color as selected by Architect.
   3. NFPA 701 compliant.
   4. Used as the standard shade fabric unless otherwise indicated.

B. Blackout Fabric (Where Indicated)
   1. Opaque room-darkening fabric with 0% openness.
   2. Color as selected by Architect.
   3. NFPA 701 compliant.
   4. Provide compatible side channels where required for increased light blocking.
   5. Provide smooth or light-sealed edges as required at jambs to minimize light leakage.

PART 3 - EXECUTION

3.1 EXAMINATION

A. Confirm existing conditions, mounting surfaces, and shade dimensions.

B. Verify power and junction box locations for motorized shades.

3.2 INSTALLATION

A. Install shades level, plumb, and aligned as specified by manufacturer.

B. Install manual shade chain tension devices in accordance with ANSI/WCMA requirements.

C. Coordinate with Electrical Contractor for final motor connections.

D. Set and verify motorized shade limits for smooth operation.

E. Maintain minimum 2-inch clearance between shade fabric and adjacent glazing or hardware to prevent interference during operation.

3.3 ADJUSTING AND CLEANING

A. Adjust shades for proper operation.

B. Clean exposed components.

C. Replace damaged or improperly functioning units.

3.4 PROTECTION

A. Protect installed shades until Substantial Completion.

END OF SECTION 122496

SECTION 123000 - MANUFACTURED CASEWORK

PART 1 – GENERAL

1.1 SUMMARY

A. Related Documents:

1. Drawings, specifications, and general provisions of the Contract.

B. Section Includes:

1. Furnish and install plastic laminate casework and accessories as shown and listed on drawings and specified herein. Includes all supports, shelving, and filler panels necessary for a complete casework installation.

C. Related Requirements to be Performed by Others:

1. Division 06 Section: “Miscellaneous Rough Carpentry” for blocking within walls to adequately support casework.

2. Division 07 Section: “Joint Sealants” for caulking of casework to abutting walls.

3. Division 09 Section: “Resilient Base and Accessories” for resilient base applied to manufactured casework.

4. Division 12 Section: “Solid Surface Countertops” for countertops.

1.2 REFERENCES

A. ANSI-A135: for all hardboard.

B. ANSI-A208.1-2009: for grade M-3 mat-formed wood particleboard.

C. BHMA A156.9: for grade-1 hinge requirements.

D. NEMA 3 LD-2005: for performance requirements of high pressure laminates.

E. SEFA 8PL Recommended Practices: for cabinet construction.

1.3 DEFINITIONS

A. Open Interiors: Any open storage unit without solid door or drawer fronts, units with full glass insert doors, and units with sliding solid doors.
B. Closed Interiors: Any closed storage unit behind solid door or drawer fronts.
C. Exposed Ends: Any storage unit exterior side surface that is visible after installation.
D. Other Exposed Surfaces: Faces of doors and drawers when closed, and tops of cabinets less than 72 inches above furnished floor.

E. Semi-Exposed Surfaces: Interior surfaces that are exposed to view when doors or drawers are opened, including the bottoms of wall cabinets and the tops of cabinets 72 inches or more above the finished floor.

F. Concealed Surfaces: Any surface not visible after installation.

1.4 SUBMITTALS

A. Product Data: For Casework core materials, hardware, and finish components including Plastic Laminates, edge banding, adhesives and sealants.

B. Shop Drawings:

1. Comply with submittals procedures.
2. Include catalog numbers and product data.
3. Submit three sets of laser quality, 11 x 17 shop drawings consisting of:
   a. Finish, hardware, construction options selection sheet.
   b. Small scale floor plan showing casework in relation to the building.
   c. Large scale elevations and plan views.
   d. Cross-sections; service runs; locations of blocking within walls (blocking is done by others); rough-in requirements and, sink centerlines
4. Approved shop drawings to be returned to manufacturer at least 60 days before production.
5. Project Architect must approve all items prior to fabrication and delivery of casework.
6. Casework installer verifies all critical building dimensions prior to fabrication.

C. Samples:

1. Submit one set of laminate color brochures from standard laminate manufacturers Wilsonart and Formica.
2. Submit one edge color sample chain.
3. Submit one set of interior colors samples.
4. Submit catalog showing construction details, material specifications and hardware specifications of all items used.

D. Warranty:

1. Provide sample warranty document stating specified terms as referenced herein.

1.5 QUALITY ASSURANCE

A. Manufacturer: Minimum of 5 years experience in providing manufactured casework systems for similar types of projects, producing evidence of financial stability, bondability, and adequate facilities and personnel required to perform on this project.

B. Provide products complying with AWI Architectural Woodwork Standards, Custom Grade.

C. Single Source Manufacturer: Laminate casework and related accessories specified in this Section shall be engineered and built by a single source manufacturer to ensure consistency and quality for these related products.

D. Quality Standard: Unless otherwise indicated, comply with AWI's Architectural Woodwork Quality Standards for grades of interior architectural woodwork, construction, finishes, and other requirements.

1.6 DELIVERY, STORAGE, AND HANDLING

A. Delivery and Acceptance Requirements:

1. Deliver casework once painting, and similar requirements have been completed that will not damage casework. This includes ensuring spaces are enclosed and weather tight.

2. All casework shall be blanket wrapped for protection during shipping.

B. Storage and Handling:

1. Casework must be protected from dust, dirt and/or other trades.

1.7 SITE CONDITIONS

A. Ambient Conditions:

1. Do not deliver or install the casework until concrete, masonry, and drywall/plaster work is dry; ambient relative humidity is maintained between 25 – 55% prior to delivery and throughout the life of installation; and the temperature is controlled above 55°F.

2. Casework shall not be stored or installed in non-climate-controlled conditions.

3. If ambient conditions are not met at the time of the requested delivery, the general contractor must provide a letter releasing manufacturer from any liability and responsibility from any warranty or damage resulting from not complying with required ambient conditions.

1.8 WARRANTY

A. Provide a Five-Year warranty to the original owner against defective material and workmanship.

1. The warranty specifically does not cover any product or hardware which has been incorrectly installed, including poor climate conditions, exposed to excessive loads or abuse.

2. All non-casework items supplied, but not manufactured by casework manufacturer including, but not limited to sinks, fixtures, apparatus, fume hoods, keyboard trays, spray booths, lights, power outlets, and power strips shall be covered under the original manufacturers' warranty.

PART 2– PRODUCTS

2.1 MANUFACTURERS

A. Manufacturers:

1. Basis-of-Design Product: TMI Systems Corp.
2. Case Systems.
3. Campbell Rhea Décor Series
4. Or approved equal.

2.2 MATERIALS

A. Provide Plastic Laminate Faced Cabinets Manufactured with:

1. Particleboard Core:

a. Particleboard: Industrial Grade average 45-pound density particleboard, ANSI A 208.1-2022, meeting minimum M-2 requirements.

b. Particleboard with Moisture Resistant at sink locations: Industrial Grade average 45-pound density particleboard, ANSI A 208.1-2022, meeting minimum M-2 requirements.

c. MR Moisture Resistant Particleboard: Average 45-pound density particleboard, ANSI A 208.1-2022, M-2 requirements.

d. Medium Density Fiberboard: Minimum average density 45-50 lbs., ANSI A208.2-2022 requirements.

B. Decorative Laminates: GREENGUARD Indoor Air Quality Certified.

1. High-pressure decorative laminate VGS (.028), ISO 4586.
2. High-pressure decorative laminate HGS (.048), ISO 4586.
3. High-pressure decorative laminate HGP (.039), ISO 4586.
4. High-pressure cabinet liner CLS (.020), ISO 4586.
5. High-pressure backer BKH (.048), (.039), (.028), ISO 4586.
6. Thermally fused laminate TFL, ISO 4586. (TFL allowed on casework interiors only, as specified below. Utilization of TFL on any exterior casework surfaces, including door and drawer faces and finished ends, will not be permitted.)

C. Edging Materials:

1. 1mm PVC banding, machine applied.
2. 3mm PVC banding, machine applied and machine profiled to 1/8 inch radius.

E. Glass:

1. Wall unit full sliding glass doors: 1/4 inch thick laminated safety glass.
2. Glass insert doors, hinged or sliding wall cabinets: 1/4 inch thick laminated safety glass.
3. Glass insert doors, hinged or sliding tall or base cabinets. 1/4 inch thick laminate safety glass.
4. Sliding doors mounted in aluminum track.

B. Joinery:

1. Mechanical Joinery:

a. All cabinet body components shall be secured utilizing concealed interlocking mechanical fasteners as approved by the AWI Quality Standards 8th Edition -2003 Sections 400A-T-12, 400B-T10 and 1600-T-11.

C. Surface Material:

1. Acceptable laminate color, pattern, and finish as either scheduled or otherwise indicated on drawings or as selected by Architect from manufacturer's standards types and nominal thickness including:

a. Vertical surface decorative grade VGS: .028” thick

b. General purpose decorative grade HGS: .048” thick

c. Cabinet decorative liner grade CLS: .020” thick

d. Non-decorative backer grade BKH: .028” thick

e. Thermally fused melamine laminate

f. Chemical resistant decorative laminate

D. Edge banding:

1. PVC

a. Shall be applied utilizing hot melt adhesive and radiused by automatic trimmers. Edging shall be available in a variety of color options.

E. Adhesives:

1. PVA

a. Adhesive shall be mechanically applied.

b. NAUF, no VOC

2. EVA

a. Adhesive shall be mechanically applied.

F. Protective coating option:

1. All surfaces, including: pulls, hinges, and edge banding be coated with OEM-treated, quat-silane antimicrobial AEM 5772 from AEGIS Environments.

2.3 SPECIALTY ITEMS

A. Support Members:

1. Support brackets: Epoxy powder coated, 11 gauge steel with integral cleat mount opening and wire management opening.

2. Undercounter support frames: Epoxy powder coated.

3. Legs: Epoxy powder coated.

B. Tote Trays:

1. Heavy-duty vacuum-formed polypropylene plastic with full top rim and pull. Trays are ivory color, equipped with label holder.

2. Tote tray/supply cabinets equipped with injection molded polycarbonate; continuous side rail support glide. Each side rail support glide is adjustable with integral support pins to interface 32mm pre-drilled holes.

C. Mobile Storage Units:

1. Mobile storage units are mounted to a caster base panel of 3/4 inch thick particleboard with black 3mm PVC edgebanding on all four edges.

2. Four Casters per Unit: 3-inch wheels of poly gray tread, with swivel ball bearings and heavy gauge steel plate. 2 casters with brakes per unit. Load capacity per caster to be a minimum of 250 pounds.

3. Side panels, back, top, door and drawer fronts are of 3/4 inch thick particleboard, laminated on the exterior with VGS (0.028") high pressure decorative laminate and balanced on the interior with CLS (0.020") high pressure cabinet liner. Use of TFL on exposed exterior surfaces will not be permitted.

4. Exposed edges are PVC banding, 1mm or 3mm thickness, to match adjacent casework.

5. Individual Finished Top Panel provided on each mobile unit. 3/4 Inch particleboard core with VGS laminate and 3mm PVC edgebanding on all four edges.

D. Computer Keyboard Tray:

1. Articulating/Non-Articulating, undercounter mount with positive stop drawer slides.

2.4 FABRICATION

A. Fabricate casework and related products to dimensions, profiles, and details shown.

B. All casework panel components must go through a secondary sizing process after cutting, producing a panel precisely finished in size and square to within 0.010 inches, ensuring strict dimensional quality and structural integrity in the final fabricated product.

C. Cabinet Body Construction:

1. Tops and bottoms are glued and doweled to cabinet sides and internal cabinet components such as fixed horizontals, rails, and verticals. A minimum of 6 dowels are used each joint for 24-inch deep cabinets, and a minimum of 4 dowels are used each joint for 12-inch deep cabinets. (Mechanical or metal hardware fasteners joining cabinet top and bottom panels to the sides will not be accepted.)

   a. Tops, bottoms and sides of all cabinets are particleboard core.

2. Cabinet backs: 1/4 inch thick medium density fiberboard panel fully captured by the cabinet top, bottom and side panels. Finish to match cabinet interior. 3/4 inch x 4 inch particleboard rails will be placed behind the back panel at the top and bottom, and doweled to the sides utilizing 10mm hardwood fluted dowels. A third intermediate rail will be included on all cabinets taller than 56 inches. Utilize hot melt glue to further secure back and increase overall strength.

   a. Exposed back on fixed or movable cabinets: 3/4 inch thick particleboard with the exterior surface finished in VGS laminate as selected.

3. Fixed base and tall units have an individual factory-applied base, constructed of 3/4 inch thick plywood. Base is 102mm (nominal 4 inch) high unless otherwise indicated on the drawings.

4. Base units, except sink base units: Full sub-top glued and doweled to cabinet sides.

   a. Sink base units are provided with open top and a stretcher at the front, attached to the sides. Back to be split removable access panel.

5. Side panels and vertical dividers shall receive adjustable shelf hardware at 32mm line boring centers. Mount door hinges, drawer slides and pull-out shelves in the line boring for consistent alignment.

6. Exposed and semi exposed edges.

   a. Edging: 1mm PVC machine applied.

7. Adjustable Shelves in Cabinets

   a. Core: Particleboard.
   b. Core Thickness: 3/4 inch up to 30 inches wide, 1 inch over 30 inches wide.
   c. Edge: 1mm PVC on Front Edge Only.

8. Interior finish, units with open Interiors:

   a. Top, bottom, back, sides, horizontal and vertical members, and adjustable shelving faces with TFL Thermally Fused Melamine laminate.

9. Interior finish, units with closed Interiors:
   a. Top, bottom, back, sides, horizontal and vertical members, and adjustable shelving faces with TFL Thermally Fused Melamine laminate.

10. Exposed ends:
    a. Faced with high-pressure decorative VGS laminate. Use of TFL on exposed ends will not be permitted.

11. Wall unit bottom:
    a. Faced with thermally fused melamine laminate.

12. <u>Balanced construction of all laminated panels is mandatory</u>. Unfinished core stock surfaces, even on concealed surfaces (excluding edges), are not permitted.

D. Drawers:

1. Sides, back and sub front: Minimum 1/2 inch thick particleboard, laminated with TFL Thermally Fused Melamine doweled and glued into sides. Top edge banded with 1mm PVC.

2. Drawer bottom: Minimum 1/2 inch thick particleboard laminated with TFL Thermally Fused Melamine, screwed directly to the bottom edges of drawer box.

3. Paper storage drawers: Minimum 3/4 inch thick particleboard sides, back, and sub front laminated with TFL Thermally Fused Melamine. Minimum 1/2 inch thick particleboard drawer bottoms screwed directly to the bottom edges of the drawer box. Provide PVC angle retaining bar at the rear of the drawer.

E. Door/Drawer Fronts:

1. Core: 3/4 inch thick particleboard.
2. High-pressure decorative VGS laminate exterior, balanced with high-pressure cabinet liner CLS.
3. Edges: 3mm PVC, machine applied, external edges and outside corners machine profiled to 1/8 inch radius.
4. Provide double doors in opening in excess of 24 inches wide.

F. Door Fronts with glass insert captured by retainer clips per AWI Custom Grade:

1. Core: 3/4 inch thick medium density fiberboard (MDF).
2. High-pressure decorative VGS laminate exterior, balanced with high-pressure VGS laminate.
3. Edges: 3mm PVC, machine applied, external edges and outside corners machine profiled to 1/8 inch radius.
4. Provide cutout in door panel resulting in 3-3/8 inch frame. Exposed cutout edge to be finished with 1mm PVC edgebanding.
5. A notch cutout 3/8 inch x 1/4 inch for the glass panel to set into, mounting flush with the back side (interior side) of the door panel. The interior cutout edge will be painted black, grey, white, or beige to match the interior surface.
6. Glass panel to be captured and held in place utilizing glass retainer clips, screwed in place. Minimum eight clips per glass panel located in the four corners of the cutout.

G. Miscellaneous Shelving (not in Cabinets):

a. Core material: 1 inch thick particleboard.
b. High-pressure decorative VGS laminate on both faces.
c. Edges: 3mm PVC, external edges and outside corners machine profiled to 1/8 inch radius.

2.5 FINISHES

A. Plastic Laminate Casework Colors by Wilsonart or Formica, or Approved Equal:

1. As selected by Architect from manufacture's standard range of laminate colors and finishes.
   a. Standard: "60" or "38" matte finish
2. Thermally Fused Melamine Laminate that meets performance requirements of ANSI/NEMA 3 LD – 2005 for GP-28.
   a. As selected by Architect from manufacturer's' standard range of colors.

2.6 ACCESSORIES

A. Hardware:

1. Hinges:

   a. 5-Knuckle Hinges / Reveal Overlay: Standard: Hinges shall be: .095" thick steel five-knuckle hospital-tip, institutional Grade (Grade 1 per ANSI/BHMA A156.9) quality with .187" diameter tight pin. Each hinge shall be secured with a minimum of nine No. 8 screws. Hinge shall permit door to swing 270 degrees without binding. Doors less than 48" in height shall have two hinges. Doors over 48" in height shall have three hinges

2. Pulls:

   a. One pull shall be: located at the centerline of the drawer, regardless of width, to ensure ease of operation and maximize drawer slide life.

      i. Standard: Standard: Anodized aluminum wire pull, 8mm diameter with 96mm O.C. mounting holes or Epoxy coated wire pull, 8mm diameter with 96mm O.C. mounting holes

3. Drawer Slides:

   a. Regular, knee space, and pencil: 100-pound load-rated epoxy-coated steel, bottom corner mounted with smooth, quiet nylon rollers. Positive stop in both directions with self-closing feature. Paper storage, 150-pound load-rated epoxy-coated steel slides.

   b. File: Full extension, 150-pound load-rated epoxy-coated steel, bottom corner mounted with smooth, quiet nylon rollers. Positive stop in both directions with self-closing feature.

   c. Standard drawer: Self-closing, bottom mount epoxy coated with captive roller and positive in stop. Slide shall have 100 lb. load rating, must be: self-closing and must prevent drawer fronts from contacting the cabinet body. Drawer slides must meet or exceed Grade 1 requirements per ANSI A156.9/BHMA with full extension slides on file and paper storage

4. Adjustable Shelf Supports:

   a. Injection-molded transparent polycarbonate friction fits into cabinet end panels and vertical dividers, adjustable on 32mm centers. Each shelf support has 2 integral support pins, 5mm diameter, to interface pre-drilled holes and to prevent accidental rotation of support. The support automatically adapts to 3/4-inch or 1-inch-thick shelving and provides a non-tip feature for shelving. Support may be field-fixed if desired. Structural load to 1200 pounds (300 pounds per support) without failure or must meet AWI/ANSI Duty Level 4.

5. Wall Shelving Hardware:

   a. Heavy-duty wall shelving hardware, including standards and brackets, are available in an anochrome finish.

   b. Bracket Mounted Shelf Core shall be: Standard: Particleboard

   c. Bracket Mounted Shelf Edge shall be: 3mm

d. Bracket Mounted Shelf Surface shall be: VGS laminate

6. Shelf Clips:

i. Shelf clips shall be injected molded clear plastic, with a double pin engagement 32mm on center and shall have 3/4" and 1" anti-tip locking tabs as approved in AWI 400B-T-9 for premium Grade. Shelf clips shall be: single pin plastic shelf clip with anti-tip locking tabs, used for all 1/4" hardboard shelves.

7. Closet Rods shall be Zinc plated rod, 1" diameter with captive sockets.

8. Locks:

1. Removable core, disc tumbler, cam-style lock with strike. The lock for sliding 3/4-inch thick doors is a disc-type plunger lock, sliding door type with strike. The lock for sliding glass/acrylic doors is a ratchet-type sliding showcase lock.

2. An elbow catch or chain bolt is used to secure inactive doors on all locked cabinets.

9. Catches:

a. Chain Pulls shall be zinc plated, spring loaded door catch used to hold door securely shut.

b. Chain Stops shall be zinc plated, looped chain used to limit door swing as specified, mounting plate at each end of chain shall use (4) #7 x 5/8" screws to secure to cabinet door and end panel. They shall be on cabinets at adjoining walls and where casework can interfere with the door swing of the tall cabinet.

c. Elbow Catch shall be chrome plated, spring loaded, used to hold non-locking door securely shut.

d. Roller Catch, (not used with self-closing hinges) shall have: heavy-duty, spring-loaded roller, with molded plastic bumper mounted at door top to keep door securely shut.

e. Magnetic Catch, (not used with self-closing hinges) shall have: white plastic housing with two 32mm spaced, elongated holes for screw-attachment to allow adjustability.

f. Catches shall be: Standard: Magnetic at Base and Wall, 1 Roller at Tall

PART 3 – EXECUTION

3.1 INSTALLERS

A. Installation shall be: by casework manufacturer's authorized representative.

3.2 INSTALLATION

A. Casework shall be installed plumb and true and is to be securely anchored in place.
B. The casework contractor shall verify all critical building dimensions prior to fabrication of casework.
C. All casework shall be: securely anchored to horizontal wall blocking, not to plaster lathe or wall board.
D. The casework manufacturer shall re-configure the casework arrangements to dimensions requiring 2-1/2" or less of filler at each end of wall-to-wall elevations, and to ensure a complete and satisfactory installation.
E. The casework installer shall remove all debris, sawdust, scraps, and leave casework spaces clean.
F. All casework must be installed by casework installer plumb and level, adjust all doors, drawers and hardware to comply with manufacturers specifications and operate properly.

END OF SECTION 123000

SECTION 123661 - SOLID SURFACING COUNTERTOPS

PART 1 - GENERAL

1.1 RELATED DOCUMENTS

A. Drawings and general provisions of the Contract, including General and Supplementary Conditions and Division 01 Specification Sections, apply to this Section.

1.2 SUMMARY

A. Section Includes:

1. Solid surface material countertops.
2. Solid surface material backsplashes.
3. Solid surface material apron fronts.
4. Solid surface window stools and sills.
5. Adhesives and sealants required for installation.

B. Related Sections:
1. Section 123000 – Manufactured Casework.
2. Section 085113 – Aluminum Windows.
3. Section 085200 – Wood Windows.

1.3 ACTION SUBMITTALS

A. Product Data: For countertop**,** wall, and sill materials including manufacturer's technical data sheets, and published written instructions.

B. Shop Drawings: For countertops. Show materials, finishes, edge and backsplash profiles, methods of joining, terminations, and cutouts.

1. Show locations and details of joints.
2. Show direction of directional pattern, if any.
3. Indicate substrate requirements and support conditions.

C. Samples for Verification: For the following products:

1. Countertop material, 6 inches (150 mm) square.

1.4 INFORMATIONAL SUBMITTALS

A. Qualification Data: For manufacturer and fabricator.

1.5 CLOSEOUT SUBMITTALS

A. Maintenance Data: For solid surface material countertops to include in maintenance manuals. Include Product Data for care products used or recommended by Installer and names, addresses, and telephone numbers of local sources for products.

1.6 QUALITY ASSURANCE

A. Manufacturer Qualifications: Manufacturer shall have a minimum of 10 years documented experience producing solid surface materials of similar type and scope.

1.7 FIELD CONDITIONS

A. Field Measurements: Verify dimensions of countertops by field measurements before countertop fabrication is complete.

1.8 COORDINATION

A. Coordinate locations of utilities that will penetrate countertops or backsplashes.

1.9 WARRANTY

A. Manufacturer's Warranty: Manufacturer and installer agree to repair or replace sheet material not free from defects in materials, fabrication, or workmanship within specified warranty period.

1. Warranty Period: 10 years from date of Substantial Completion.

PART 2 - PRODUCTS

2.1 SOLID SURFACE COUNTERTOP AND SILL MATERIALS

A. Composition Solid-Surface Material: Homogeneous-filled plastic resin complying with ICPA SS-1.

1. Basis-of-Design Product: Subject to compliance with requirements, provide by one of the following:
   a. DuPont (Corian).
   b. Wilsonart, LLC.
   c. Formica Corporation.
   d. Meganite Inc.
   e. Samsung Chemical USA, Inc.
   f. Or approved equal
2. Panel Weight: 4.4 lb/sq. ft.
3. Surface-Burning Characteristics: Comply with ASTM E 84; testing by a qualified testing agency. Identify products with appropriate markings of applicable testing agency.

   a. Flame-Spread Index: **25** or less.
   b. Smoke-Developed Index: **450** or less (or as required by local code).
4. Colors and Patterns: As indicated on Drawings by manufacturer's designations.

B. Plywood: Exterior softwood plywood complying with DOC PS 1, Grade C-C Plugged, touch sanded.

2.2 COUNTERTOP FABRICATION

A. Fabricate countertops according to solid surface material manufacturer's written instructions and to the AWI/AWMAC/WI's "Architectural Woodwork Standards."

1. Grade: Custom (Specifier’s Choice acceptable)

2. Front: As indicated on Drawings
3. Backsplash: Straight profile with eased edges unless otherwise indicated.
4. End Splash: Matching backsplash.

B. Countertops: 1/2-inch (12.7-mm) thick, solid surface material with beveled front edge built up with same material.

C. Backsplashes: 1/2-inch (12.7-mm) thick, solid surface material, with beveled top.

D. Window Sills: 1/2-inch (12.7-mm) thick, solid surface material, with beveled edge.

E. Fabricate tops with shop-applied edges unless otherwise indicated. Comply with solid surface material manufacturer's written instructions for adhesives, sealers, fabrication, and finishing.

1. Fabricate with loose backsplashes for field assembly.

F. Joints: Minimize number of joints. Provide inconspicuous, smooth, color-matched joints using manufacturer’s recommended adhesive.

G. Cutouts and Holes:

1. Undercounter Plumbing Fixtures: Make cutouts for fixtures in shop using template or pattern furnished by fixture manufacturer. Form cutouts to smooth, even curves.
   a. Provide vertical edges, rounded to 3/8-inch (10-mm) radius at juncture of cutout edges with top surface of countertop, slightly eased at bottom.

2. Counter-Mounted Plumbing Fixtures: Prepare countertops in shop for field cutting openings for counter-mounted fixtures. Mark tops for cutouts and drill holes at corners of cutout locations. Make corner holes of largest radius practical.

2.3 INSTALLATION MATERIALS

A. Adhesive: Product recommended by solid surface material manufacturer.

B. Sealant for Countertops: Comply with applicable requirements in Section 079200 "Joint Sealants."

PART 3 - EXECUTION

3.1 EXAMINATION

A. Examine substrates to receive solid surface material countertops and conditions under which countertops will be installed, with Installer present, for compliance with requirements for installation tolerances and other conditions affecting performance of countertops.

B. Proceed with installation only after unsatisfactory conditions have been corrected.

3.2 INSTALLATION

A. Install countertops level to 1/8 inch in 8 feet (3 mm in 2.4 m). Do not exceed 1/64-inch (0.4-mm) difference between planes of adjacent units.

B. Fasten countertops by adhering with continuous, thin beads of 100-percent silicone or manufacturer-recommended adhesive to base units into underside of countertop at 18 to 24 inches (457 to 610 mm) o.c. Shim as needed to align subtops in a level plane.

C. Secure countertops to subtops or wood-web frame with adhesive according to solid surface material manufacturer's written instructions. Align adjacent surfaces and, using adhesive in color to match countertop, form seams to comply with manufacturer's written instructions. Carefully dress joints smooth, remove surface scratches, and clean entire surface.

D. Bond joints with adhesive and draw tight as countertops are set. Mask areas of countertops adjacent to joints to prevent adhesive smears.

1. Clamp units to temporary bracing, supports, or each other to ensure that countertops are properly aligned and joints are of specified width.

E. Install backsplashes and end splashes by adhering to wall and countertops with adhesive. Mask areas of countertops and splashes adjacent to joints to prevent adhesive smears.

F. Complete cutouts not finished in shop. Mask areas of countertops adjacent to cutouts to prevent damage while cutting. Make cutouts to accurately fit items to be installed, and at right angles to finished surfaces unless beveling is required for clearance. Ease edges slightly to prevent snipping.

G. Apply sealant to gaps at walls; comply with Section 079200 "Joint Sealants."

END OF SECTION 123661

SECTION 129300 - SITE FURNISHINGS

PART 1 GENERAL
Model: FBF-50

1.1 DESCRIPTION

A. Section includes information, materials, and options for products manufactured by Victor Stanley, Inc. All specifications are subject to change. Contact manufacturer for details.

1.2 SUBMITTALS

A. Specifications Drawing: Detail drawing of product including overall dimensions and options.
B. Samples: Various component samples available upon request.
C. Qualifications: Installer must submit evidence of a successful installation history with comparable materials and designs specified.

1.3 DELIVERY, STORAGE, and HANDLING

A. Delivery: Deliver products to site in manufacturer's original, unopened containers and packaging. Upon delivery, examine packages immediately to ensure all products are complete and undamaged.
B. Storage: Store products in a protected, dry area in manufacturer's unopened containers and packaging.
C. Handling: Protect product's finish from damage during handling and installation.

1.4 COORDINATION

A. Coordinate with site work and other appropriate sections of the specifications to maintain proper provisions of the work specified.
B. All site furnishings shall be laid out in the field and approved prior to installation.

PART 2 PRODUCTS

2.1 MANUFACTURER

A. Victor Stanley, Inc. or Approved Equal.
P.O. Drawer 330
Dunkirk, MD 20754 USA
Toll Free: (800) 368-2573 (USA & Canada)
Tel: (301) 855-8300 Fax: (410) 257-7579
E-mail: sales@victorstanley.com
Web site: http://www.victorstanley.com

2.2 BENCH

A. Type: Model FBF-50 from the StreetSites™ Collection or Approved Equal.
B. Covered by one or more of the following U.S. Patents: D585,209 S; D595,973 S

2.3 MATERIALS

A. 1/4” x 1-1/2” (6mm x 38mm) horizontal solid steel slats; 3/8” x 1 (10mm x 25mm) solid steel bracing; 1-7/8” (48mm) tubular steel cross-members; 2” (51mm) square tubular steel posts

2.4 OPTIONS

A. Standard lengths: 4ft (1.2 meters), 6ft (1.8 meters), and 8ft (2.4 meters) (custom lengths available)
B. Mounting: Standard in-ground
C. Available with optional Skate Guard(s)
D. Standard Colors: Bronze, Black, Green, Tavern Square Green, Teal, Blue, Burgundy, Red, White, Gray. Available with Optional Metallics: Silver and Titanium. Custom Colors available (including the RAL range).

2.5 FINISHES

A. All fabricated metal components are steel shotblasted, etched, phosphatized, preheated, and electrostatically powder-coated with TGIC polyester powder coatings. Products are fully cleaned and pretreated, preheated and coated while hot to fill crevices and build coating film. Coated parts are fully cured to coating manufacturer’s specifications. The thickness of the resulting finish coat averages 8-10 mils (200-250 microns).
B. In high salt abusive climates, hot-dip galvanizing before powder coating is available. Hot-dip galvanizing is performed for Victor Stanley, Inc. by an experienced qualified firm to which products are shipped for galvanizing. Hot-dip galvanizing includes an aggressive pre-treatment and immersion in a tank of charged liquid zinc at or around 860°F (460°C). The resulting surface is resistant to rust but has some unevenness resulting from the bonding of the zinc to the steel surface. As a result, the powder-coating surface finish over that galvanized surface may exhibit bumps, unevenness, and may not be as smooth as Victor Stanley, Inc.’s standard finish; this uneven and inconsistent finish is normal for hot-dip galvanizing. Most fabricated metal components and castings can be hot-dip galvanized, please contact manufacturer for details.

PART 3 EXECUTION

3.1 INSTALLATION

A. Mounting Style:
    a. Standard in-ground: It is not recommended to locate footing(s) until bench is in place. This Victor Stanley, Inc. product must be permanently affixed in the ground. Consult your local codes for regulations.

3.2 PROTECTION

A. Protect products prior to installation by having them remain in the manufacturer’s packaging and container.

END OF SECTION 129300

210000 - FIRE PROTECTION

FIRE SPRINKLER SYSTEM SPECIFICATION (HG)

PART 1 GENERAL

1.1 DESCRIPTION OF WORK

A. This scope of work is a new fire suppression system. Scope of work includes:
   1. Wet pipe fire sprinkler system(s)

B. Provide all labor, services, material and related items necessary to complete the fire protection work indicated on drawings and described in the specifications herein and in accordance with applicable codes listed below.

C. Provide all work in accordance with the applicable codes and standards listed below. No work shall fail to meet the minimum required codes and standards. Submit written Request for Information for questions, discrepancies, or any proposed alternatives.

1.2 RELATED WORK

A. Applicable provisions of Division 0 and 1, including Firestopping and Painting.

1.3 DESIGN CRITERIA

A. Refer to drawings for applicable codes and standards.

B. Sprinkler Design Criteria:
   1. Provide hydraulic calculations in accordance with applicable standard(s) from Section A.
   2. Provide a minimum hydraulic safety factor of 10 psi below the available water supply curve.
   3. Hydraulic design area reduction for use of quick response sprinklers is permitted where allowed in NFPA 13.
   4. Refer to drawings for design criteria for this project.

C. Water Supply Information
   1. Refer to drawings for provided water supply information.

D. Zones
   1. Refer to drawings for sprinkler system zoning.

E. Seismic Protection
   1. Seismic protection is not required for the fire sprinkler system.
   2. Building Seismic Design Category is B.

1.4 SUBMITTALS

A. Working Drawings
   1. Submit detailed plans which includes all items listed NFPA 13 for working drawings. Drawings which do not include all items listed in NFPA 13 will be rejected.
   2. Provide working drawings designed by a NICET Level III or Level IV who has a minimum four years documented experience exclusively in a fire protection role.
   3. Provide working drawings that are electronically prepared.
   4. Provide scaled working drawings at 1/8-inch minimum (1:100).
   5. Submit drawings in PDF form, in accordance with Division 1 specifications.
   6. Partial submittals will not be accepted.

B. Manufacturer's Data Sheets
   1. Provide product data for all material and equipment proposed for the system.

2. Where multiple items are shown on a data sheet, clearly identify which types, sizes, or models are proposed.

C. Hydraulic Calculations
1. Provide hydraulic calculations in tabular form as described in NFPA 13.
2. Hydraulic calculations shall be provided by a NICET Level III or Level IV who has a minimum four years documented experience exclusively in a fire protection role.
3. Hydraulic calculations shall be complete and cross referenced to the appropriate drawing sheets. Hydraulic calculations shall be prepared using one of the following programs (NO EXCEPTIONS):
i. HydraCAD
ii. AutoSprink
iii. SprinkCAD

D. Closeout Documents:
1. A copy of the as-built drawings and hydraulic calculations.
2. Material and Testing Certificates, as indicated in NFPA 13.
3. A physical copy of the latest edition of NFPA 25.
4. Operations and Maintenance Manuals including procedures for system startup, operation, shutdown, and routine maintenance and testing. Provide emergency contact and maintenance contact information.

1.5 QUALITY ASSURANCE

A. Qualifications
1. Provide a copy of the installing contractor's license.
2. Provide a letter demonstrating related commercial fire sprinkler work completed over the past five years.
3. Provide a copy of the NICET certification.
4. Provide written Quality Assurance / Quality Control Program for delivery, handling, storage (onsite/offsite), installation, testing and commissioning for review.

B. Material and Equipment
1. Provide all equipment and devices of a make and type listed by UL or approved by FM for the purpose for which it will be used.
2. Provide all materials and equipment free from defect.
3. Provide all materials and equipment new unless indicated otherwise on the drawings.

C. System Acceptance
1. Comply with NFPA 13 requirements.
2. Complete and sign the Contractor's Material and Test Certifications and provide copies to Owner.

D. Certification: NFPA Contractor's Material and Test Certificate

1.6 MAINTENANCE

A. Spare Parts: Provide the following items for storage in spare sprinkler head cabinets:
a. Spare sprinkler heads per NFPA-13.
b. One sprinkler head wrench to fit each type sprinkler head listed above.

PART 2 PRODUCTS

2.1 GENERAL

A. Listings

1. Provide materials, equipment, and devices listed for fire protection service when required by NFPA 13 or this specification.

B. Rated Pressure

1. Provide all components that are rated for the maximum working pressure of the system, but in no case be less than 175 psi (1207 kPa).

2.2 PIPE & FITTINGS

A. Underground Pipe & Fittings

1. Provide pipe and fittings for underground water service in accordance with NFPA 24.
2. Provide pipe and fittings from inside face of building 12-inches (300 mm) above finished floor to a distance of approximately 5-feet (1.5 m) outside the building. Provide Ductile Iron with flanged fittings and stainless steel bolts or a continuous piece of welded stainless steel fire water service pipe from a point outside the building perimeter to at least 1-ft above finished floor.

B. Aboveground Pipe & Fittings

1. Provide pipe and fittings for the fire sprinkler system(s) in accordance with NFPA 13.
2. Provide welded, flanged, threaded, or grooved-end type fittings. Mechanical tees and mechanical outlets are only permitted where new pipe attaches to an existing system. Plain-end pipe and fittings, including mechanical couplings, devices that grip or bite into the pipe, press fittings, and field welded fittings are not permitted.
3. Provide black steel Schedule 40 for pipe sizes 2-inch (50 mm) and smaller with threaded or grooved end connections.
4. Provide black steel Schedule 10 for pipe sizes 2 ½-inch (65 mm) and larger with grooved end connections. Provide roll-groove type in Schedule 10 pipe; cut-groove is not permitted.
5. Provide galvanized pipe for through-penetrations in exterior wall.
6. Flexible sprinkler drops are permitted. Where used, clearly indicate the following on shop drawings: (1) the maximum number of bends permitted, (2) the minimum bend radius permitted, and (3) the equivalent length used in the hydraulic calculations.

    i. Victaulic VicFlex™ Multiple-Use Flexible Stainless Steel Sprinkler Drop System with captured coupling Style 108 shall be used to locate sprinklers as required by final finished ceiling tiles and walls.

    ii. The drop shall include a UL approved Series AH1 with 3” bend radius; AH2 or AH2-CC braided hose with a bend radius to 2” to allow for proper installation in confined spaces. The hose shall be listed for (10) bends at 60” length

2.3 VALVES

A. General

1. Provide valves which are UL Listed or FM Approved for fire service and in accordance with NFPA 13.

B. Riser Manifold Assembly

1. Provide UL Listed riser manifold assembly consisting of supervised control valve, check valve, water flow switch, test and drain connection, pressure gage, and adjustable relief valve. Provide Victaulic UMC or approved equal.

C. Automatic Ball Drip

1. Provide minimum ¾-inch automatic ball drip with threads on both ends.
2. Provide automatic ball drip that is listed for the orientation which it is installed.

D. Backflow Preventer
    1. Provide backflow preventer listed for use in a Fire Suppression system.
    2. Provide a backflow preventer of a reduced pressure zone type as indicated on the drawings.
    3. Provide Interior hose valves for testing of the backflow preventer per NFPA 13 requirements where the room is provided with an exterior door that is normally locked and only accessible by authorized personnel.
E. Check Valve
    1. Check valves must be of swing type with a flanged inspection plate.
F. Butterfly Valve
    1. UL/FM approved, 300 psi grooved ends, polyphenylene sulfide coated ductile iron body (ASTM A-536). Ductile iron disc, synthetic rubber encapsulated suited for intended service, with integrally cast stem. Complete with waterproof actuator and pre-wired supervisory switches. Victaulic Series 705 W Fire Lock or equivalent.
G. Auxiliary Drain Ball Valve
    1. Model ABV – Auxiliary Drain Ball Valve: Where an auxiliary drain valve is required for drum drip connections or low point drains for water-based sprinkler systems; a specifically manufactured auxiliary drain ball valve with integral labeled sleeve shall be used. The auxiliary drain valve shall have connections of 1” Male NPT inlet x Female NPT outlet, and come equipped with a 1” brass plug at the valves outlet. It shall be factory tested to 300 psi, and the valves handle shall be labeled and tagged as an “Aux. Drain”. Auxiliary Drain Ball Valve shall be the Model ABV; as manufactured by Victaulic or equivalent.
H. Quick Drain Flexible Hose
    1. Model QD – Quick Drain Flexible Hose: Where a drain line is required downstream of a floor control manifold in order to connect the systems test & drain outlet to the systems drain stack; per the requirements of NFPA, a specifically manufactured flexible drain hose shall be used. Flexible drain hose shall be equipped with female swivel outlets for quick connections to existing NPT male outlets. A single 18” long flexible hose shall be of corrugated conduit with braided covering, and be factory tested to 450 psi. Quick Drain Flexible Hose shall be the Model QD; as manufactured by Globe Fire Sprinkler Corporation or equivalent.

2.4 FIRE DEPARTMENT CONNECTION

A. Type
    1. Provide a fire department connection of a type which meets local fire department requirements.
B. Mount & Location
    1. Provide wall-mounted exposed type Fire Department Connection as required by the Authority having Jurisdiction.
    2. Locate the fire department connection as shown on the drawings. Coordinate final location with Authority having Jurisdiction.
C. Finish
    1. Provide brass or chrome fire department connection.
D. Other Requirements
    1. Provide caps, escutcheon, and clappers in accordance with NFPA 13.
    2. Provide an automatic ball drip installed between the fire department connection and check valve with drain pipe routed to the exterior.

2.5 SPRINKLERS

A. Provide sprinklers of a type as shown on the drawings. Acceptable manufacturers:
   1. Victaulic
   2. Reliable
   3. Tyco
   4. Viking

B. Escutcheon: Provide metallic type which have a factory finish that matches the sprinkler. Provide escutcheon in accordance with the listing of the sprinkler.

C. Guards: Provide a UL Listed or FM Approved sprinkler guard(s) in accordance with NFPA 13 and when the elevation of the sprinkler is less than 7-feet 6-inches (2.3 m) above finished floor.

2.6 HANGERS AND SUPPORT

A. Provide pipe hangers, supports, and restraining of pipe in accordance with NFPA.

2.7 PENETRATIONS AND FIRESTOPPING

A. Sleeves
   1. Provide pipe sleeves where pipe passes entirely through poured-in-place concrete walls, floors, roofs, and partitions, or where sleeve is used as part of a listed firestop assembly. Pipe sleeve not required where penetration is core-drilled through concrete or masonry and cavities in the penetration are grouted smooth.
   2. Provide clearance between pipe and interior of sleeve or core-drill in accordance with NFPA 13.

B. Firestopping
   1. Provide a listed firestopping assembly to seal penetration(s) in all fire resistant rated walls, floors, and ceilings.
   2. Firestopping shall be by the contractor as listed in Division 7 specifications.

C. Escutcheons
   1. Provide escutcheon plates for pipe exposed to view which passes through walls, floors, or ceilings.

2.8 ACCESSORIES

A. Air Vent
   1. Provide an automatic air vent.
   2. Pipe the drain from air vent drain to the building exterior unless an automatic air vent is used with redundant float such that it explicitly eliminates the need for a drain as identified in the manufacturer's product data.

B. Gauges
   1. Provide gauges as required by NFPA 13, including at each waterflow switch and at each main drain connection.
   2. Provide gauges with a range where the normal pressure of the system is roughly at the midpoint of the gauge range.

C. Relief Valve
   1. Provide listed relief valve at the riser in accordance with NFPA 13.

D. Signage
   1. Steel with vitreous enamel finish, lettering on contrasting background to identify and indicate the function of:
      i. Control valves.
      ii. Drain, test, air supply and alarm check valves.

iii. Water motor alarm.
iv. Drain and test valves.
v. Hydraulic Design Nameplate Data: Size approx. 9 x 12 inches, inscribed with the following:
1. SPRINKLER SYSTEM HYDRAULICALLY DESIGNED (in block letters).
2. Location and area of hydraulically designed section.
3. Discharge density over designed area in gallons per minute.
4. Residual pressure at base of riser supplying water to designed section.

E. Sprinkler Cabinet
1. Provide a sprinkler cabinet in accordance with NFPA 13 at the building riser.
2. Provide a list of all sprinklers installed in the building on the inside of the cabinet.

F. Tamper Switches
1. Provide supervisory switches for all valves which control the supply of water to the fire suppression system, in accordance with NFPA 13. Supervisory for ball and butterfly valves may be integral with the valve.

G. Wall, Floor, and Ceiling Plates
1. Provide chrome plated steel escutcheon plate(s) for wall, floor and ceiling penetrations.

H. Waterflow Switches
1. Provide waterflow switch(es) with an adjustable delay from 0 to 60 seconds minimum for any waterflow switch not used for elevator power shunt.

PART 3– PERFORMANCE

3.1 INSTALLATION

A. Performance
1. All work must be performed by a licensed contractor, supervised, and tested by a qualified technician experienced in the installation and operation of the system type installed.
2. Provide installation, equipment, material, workmanship, fabrication, assembly, erection, examination, inspection and testing in accordance with NFPA 13 and the applicable codes and standards listed in this specification.

B. Concealment
1. Conceal all pipe in spaces that have finished ceilings.

C. Routing
1. Route pipe orthogonal to main building structure direction (parallel or perpendicular) in the area where the pipe is located.
2. Locate pipe as high as possible in areas without suspended ceilings.

D. Drains
1. Provide drains, drum drips, and low-point auxiliary drains as required by NFPA 13.
2. All Inspector Tests and Main Drains must discharge to a safe point outside the building.
3. Only low-point auxiliary drains that (1) do not contain an inspector's test and (2) are able to be throttled at the drain are permitted to discharge to a sink, wash basin or drain or capped or plugged at an accessible location. Drain must be capable of accepting the flow in order to discharge to the drain.
4. Direct drain connection to sewer is not allowed.

E. Welding
1. Welded joints form a fabrication shop are permitted. Field welding is not acceptable.

3.2 ACCESS

A. Access to Equipment
   1. Locate all valves, equipment and waterflow switches in an accessible location.
   2. Equipment located above ceilings shall be provided with access and be provided with a permanent sign visible from below the ceiling identifying the equipment location.

3.3 COORDINATION

A. Clearance
   1. Where other ceiling-mounted equipment or fixtures exists, install sprinklers and pipe as not to obstruct movement or operation of other equipment.
   2. Do not install pipe within required clearance areas of other operable equipment.
   3. Do not install pipe which imposes space required for egress, including pipe lower than 7'-6" (2250 mm) above finished horizontal floors or within 6'-8" (1625 mm) above the nose (edge) of any stair.
   4. Do not route pipe above electrical equipment in accordance with NFPA 70.

B. Coordination
   1. Coordinate locations for sprinklers, pipe, fittings and equipment to avoid conflict and work around other building systems.
   2. In cases of unavoidable conflict, the sprinkler contractor shall propose solution(s) and obtain approval from the project manager and affected trades before proceeding.

3.4 TESTING

A. Tests
   1. Provide underground flushing, hydrostatic, main drain, and all other applicable tests in accordance with NFPA 13, in the presence of the AHJ and building owner or owner's representative.
   2. Each backflow prevention assembly shall be tested at system flow demand, including all applicable hose streams, as specified in NFPA 13. The Contractor shall provide all equipment and instruments necessary to conduct a complete forward flow test, including 2.5 inch diameter hoses, playpipe nozzles, calibrated pressure gauges, and pilot tube gauge. The Contractor shall provide all necessary supports to safely secure hoses and nozzles during the test. At the system demand flow, the pressure readings and pressure drop (friction) across the assembly shall be recorded. A metal placard shall be provided on the backflow prevention assembly that lists the pressure readings both upstream and downstream of the assembly, total pressure drop, and the system test flow rate determined during the preliminary testing. The pressure drop shall be compared to the manufacturer's data and the readings observed during the final inspections and tests.
   3. Provide a copy of the record of all test reports to the building owner.

B. Instructions
   1. Furnish a qualified instructor for not less than two hours to instruct building personnel in the operation and maintenance of the system at a time and date requested by the building owner.

END OF SECTION 210000 (HG)

210000 - FIRE PROTECTION
FIRE SPRINKLER SYSTEM SPECIFICATION (TES)

PART 1 GENERAL

1.1 DESCRIPTION OF WORK

A. This scope of work is a new fire suppression system. Scope of work includes:
   1. Wet pipe fire sprinkler system(s)
B. Provide all labor, services, material and related items necessary to complete the fire protection work indicated on drawings and described in the specifications herein and in accordance with applicable codes listed below.
C. Provide all work in accordance with the applicable codes and standards listed below. No work shall fail to meet the minimum required codes and standards. Submit written Request for Information for questions, discrepancies, or any proposed alternatives.

1.2 RELATED WORK

A. Applicable provisions of Division 0 and 1, including Firestopping and Painting.

1.3 DESIGN CRITERIA

A. Refer to drawings for applicable codes and standards.
B. Sprinkler Design Criteria:
   1. Provide hydraulic calculations in accordance with applicable standard(s) from Section A.
   2. Provide a minimum hydraulic safety factor of 10 psi below the available water supply curve.
   3. Hydraulic design area reduction for use of quick response sprinklers is permitted where allowed in NFPA 13.
   4. Refer to drawings for design criteria for this project.
C. Water Supply Information
   1. Refer to drawings for provided water supply information.
D. Zones
   1. Refer to drawings for sprinkler system zoning.
E. Seismic Protection
   1. Seismic protection is not required for the fire sprinkler system.
   2. Building Seismic Design Category is B.

1.4 SUBMITTALS

A. Working Drawings
   1. Submit detailed plans which includes all items listed NFPA 13 for working drawings. Drawings which do not include all items listed in NFPA 13 will be rejected.
   2. Provide working drawings designed by a NICET Level III or Level IV who has a minimum four years documented experience exclusively in a fire protection role.
   3. Provide working drawings that are electronically prepared.
   4. Provide scaled working drawings at 1/8-inch minimum (1:100).
   5. Submit drawings in PDF form, in accordance with Division 1 specifications.
   6. Partial submittals will not be accepted.
B. Manufacturer's Data Sheets
   1. Provide product data for all material and equipment proposed for the system.

2. Where multiple items are shown on a data sheet, clearly identify which types, sizes, or models are proposed.

C. Hydraulic Calculations
1. Provide hydraulic calculations in tabular form as described in NFPA 13.
2. Hydraulic calculations shall be provided by a NICET Level III or Level IV who has a minimum four years documented experience exclusively in a fire protection role.
3. Hydraulic calculations shall be complete and cross referenced to the appropriate drawing sheets. Hydraulic calculations shall be prepared using one of the following programs (NO EXCEPTIONS):
i. HydraCAD
ii. AutoSprink
iii. SprinkCAD

D. Closeout Documents:
1. A copy of the as-built drawings and hydraulic calculations.
2. Material and Testing Certificates, as indicated in NFPA 13.
3. A physical copy of the latest edition of NFPA 25.
4. Operations and Maintenance Manuals including procedures for system startup, operation, shutdown, and routine maintenance and testing. Provide emergency contact and maintenance contact information.

1.5 QUALITY ASSURANCE

A. Qualifications
1. Provide a copy of the installing contractor's license.
2. Provide a letter demonstrating related commercial fire sprinkler work completed over the past five years.
3. Provide a copy of the NICET certification.
4. Provide written Quality Assurance / Quality Control Program for delivery, handling, storage (onsite/offsite), installation, testing and commissioning for review.

B. Material and Equipment
1. Provide all equipment and devices of a make and type listed by UL or approved by FM for the purpose for which it will be used.
2. Provide all materials and equipment free from defect.
3. Provide all materials and equipment new unless indicated otherwise on the drawings.

C. System Acceptance
1. Comply with NFPA 13 requirements.
2. Complete and sign the Contractor's Material and Test Certifications and provide copies to Owner.

D. Certification: NFPA Contractor's Material and Test Certificate

1.6 MAINTENANCE

A. Spare Parts: Provide the following items for storage in spare sprinkler head cabinets:
a. Spare sprinkler heads per NFPA-13.
b. One sprinkler head wrench to fit each type sprinkler head listed above.

PART 2 PRODUCTS

2.1 GENERAL

A. Listings

1. Provide materials, equipment, and devices listed for fire protection service when required by NFPA 13 or this specification.

B. Rated Pressure

1. Provide all components that are rated for the maximum working pressure of the system, but in no case be less than 175 psi (1207 kPa).

2.2 PIPE & FITTINGS

A. Underground Pipe & Fittings

1. Provide pipe and fittings for underground water service in accordance with NFPA 24.
2. Provide pipe and fittings from inside face of building 12-inches (300 mm) above finished floor to a distance of approximately 5-feet (1.5 m) outside the building. Provide Ductile Iron with flanged fittings and stainless steel bolts or a continuous piece of welded stainless steel fire water service pipe from a point outside the building perimeter to at least 1-ft above finished floor.

B. Aboveground Pipe & Fittings

1. Provide pipe and fittings for the fire sprinkler system(s) in accordance with NFPA 13.
2. Provide welded, flanged, threaded, or grooved-end type fittings. Mechanical tees and mechanical outlets are only permitted where new pipe attaches to an existing system. Plain-end pipe and fittings, including mechanical couplings, devices that grip or bite into the pipe, press fittings, and field welded fittings are not permitted.
3. Provide black steel Schedule 40 for pipe sizes 2-inch (50 mm) and smaller with threaded or grooved end connections.
4. Provide black steel Schedule 10 for pipe sizes 2 ½-inch (65 mm) and larger with grooved end connections. Provide roll-groove type in Schedule 10 pipe; cut-groove is not permitted.
5. Provide galvanized pipe for through-penetrations in exterior wall.
6. Flexible sprinkler drops are permitted. Where used, clearly indicate the following on shop drawings: (1) the maximum number of bends permitted, (2) the minimum bend radius permitted, and (3) the equivalent length used in the hydraulic calculations.

    i. Victaulic VicFlex™ Multiple-Use Flexible Stainless Steel Sprinkler Drop System with captured coupling Style 108 shall be used to locate sprinklers as required by final finished ceiling tiles and walls.

    ii. The drop shall include a UL approved Series AH1 with 3” bend radius; AH2 or AH2-CC braided hose with a bend radius to 2” to allow for proper installation in confined spaces. The hose shall be listed for (10) bends at 60” length

2.3 VALVES

A. General

1. Provide valves which are UL Listed or FM Approved for fire service and in accordance with NFPA 13.

B. Riser Manifold Assembly

1. Provide UL Listed riser manifold assembly consisting of supervised control valve, check valve, water flow switch, test and drain connection, pressure gage, and adjustable relief valve. Provide Victaulic UMC or approved equal.

C. Automatic Ball Drip

1. Provide minimum ¾-inch automatic ball drip with threads on both ends.
2. Provide automatic ball drip that is listed for the orientation which it is installed.

D. Backflow Preventer
    1. Provide backflow preventer listed for use in a Fire Suppression system.
    2. Provide a backflow preventer of a reduced pressure zone type as indicated on the drawings.
    3. Provide Interior hose valves for testing of the backflow preventer per NFPA 13 requirements where the room is provided with an exterior door that is normally locked and only accessible by authorized personnel.
E. Check Valve
    1. Check valves must be of swing type with a flanged inspection plate.
F. Butterfly Valve
    1. UL/FM approved, 300 psi grooved ends, polyphenylene sulfide coated ductile iron body (ASTM A-536). Ductile iron disc, synthetic rubber encapsulated suited for intended service, with integrally cast stem. Complete with waterproof actuator and pre-wired supervisory switches. Victaulic Series 705 W Fire Lock or equivalent.
G. Auxiliary Drain Ball Valve
    1. Model ABV – Auxiliary Drain Ball Valve: Where an auxiliary drain valve is required for drum drip connections or low point drains for water-based sprinkler systems; a specifically manufactured auxiliary drain ball valve with integral labeled sleeve shall be used. The auxiliary drain valve shall have connections of 1” Male NPT inlet x Female NPT outlet, and come equipped with a 1” brass plug at the valves outlet. It shall be factory tested to 300 psi, and the valves handle shall be labeled and tagged as an “Aux. Drain”. Auxiliary Drain Ball Valve shall be the Model ABV; as manufactured by Victaulic or equivalent.
H. Quick Drain Flexible Hose
    1. Model QD – Quick Drain Flexible Hose: Where a drain line is required downstream of a floor control manifold in order to connect the systems test & drain outlet to the systems drain stack; per the requirements of NFPA, a specifically manufactured flexible drain hose shall be used. Flexible drain hose shall be equipped with female swivel outlets for quick connections to existing NPT male outlets. A single 18” long flexible hose shall be of corrugated conduit with braided covering, and be factory tested to 450 psi. Quick Drain Flexible Hose shall be the Model QD; as manufactured by Globe Fire Sprinkler Corporation or equivalent.

2.4 FIRE DEPARTMENT CONNECTION

A. Type
    1. Provide a fire department connection of a type which meets local fire department requirements.
B. Mount & Location
    1. Provide wall-mounted exposed type Fire Department Connection as required by the Authority having Jurisdiction.
    2. Locate the fire department connection as shown on the drawings. Coordinate final location with Authority having Jurisdiction.
C. Finish
    1. Provide brass or chrome fire department connection.
D. Other Requirements
    1. Provide caps, escutcheon, and clappers in accordance with NFPA 13.
    2. Provide an automatic ball drip installed between the fire department connection and check valve with drain pipe routed to the exterior.

2.5 SPRINKLERS

A. Provide sprinklers of a type as shown on the drawings. Acceptable manufacturers:
   1. Victaulic
   2. Reliable
   3. Tyco
   4. Viking

B. Escutcheon: Provide metallic type which have a factory finish that matches the sprinkler. Provide escutcheon in accordance with the listing of the sprinkler.

C. Guards: Provide a UL Listed or FM Approved sprinkler guard(s) in accordance with NFPA 13 and when the elevation of the sprinkler is less than 7-feet 6-inches (2.3 m) above finished floor.

2.6 HANGERS AND SUPPORT

A. Provide pipe hangers, supports, and restraining of pipe in accordance with NFPA.

2.7 PENETRATIONS AND FIRESTOPPING

A. Sleeves
   1. Provide pipe sleeves where pipe passes entirely through poured-in-place concrete walls, floors, roofs, and partitions, or where sleeve is used as part of a listed firestop assembly. Pipe sleeve not required where penetration is core-drilled through concrete or masonry and cavities in the penetration are grouted smooth.
   2. Provide clearance between pipe and interior of sleeve or core-drill in accordance with NFPA 13.

B. Firestopping
   1. Provide a listed firestopping assembly to seal penetration(s) in all fire resistant rated walls, floors, and ceilings.
   2. Firestopping shall be by the contractor as listed in Division 7 specifications.

C. Escutcheons
   1. Provide escutcheon plates for pipe exposed to view which passes through walls, floors, or ceilings.

2.8 ACCESSORIES

A. Air Vent
   1. Provide an automatic air vent.
   2. Pipe the drain from air vent drain to the building exterior unless an automatic air vent is used with redundant float such that it explicitly eliminates the need for a drain as identified in the manufacturer's product data.

B. Gauges
   1. Provide gauges as required by NFPA 13, including at each waterflow switch and at each main drain connection.
   2. Provide gauges with a range where the normal pressure of the system is roughly at the midpoint of the gauge range.

C. Relief Valve
   1. Provide listed relief valve at the riser in accordance with NFPA 13.

D. Signage
   1. Steel with vitreous enamel finish, lettering on contrasting background to identify and indicate the function of:
      i. Control valves.
      ii. Drain, test, air supply and alarm check valves.

iii. Water motor alarm.
iv. Drain and test valves.
v. Hydraulic Design Nameplate Data: Size approx. 9 x 12 inches, inscribed with the following:
1. SPRINKLER SYSTEM HYDRAULICALLY DESIGNED (in block letters).
2. Location and area of hydraulically designed section.
3. Discharge density over designed area in gallons per minute.
4. Residual pressure at base of riser supplying water to designed section.

E. Sprinkler Cabinet
1. Provide a sprinkler cabinet in accordance with NFPA 13 at the building riser.
2. Provide a list of all sprinklers installed in the building on the inside of the cabinet.

F. Tamper Switches
1. Provide supervisory switches for all valves which control the supply of water to the fire suppression system, in accordance with NFPA 13. Supervisory for ball and butterfly valves may be integral with the valve.

G. Wall, Floor, and Ceiling Plates
1. Provide chrome plated steel escutcheon plate(s) for wall, floor and ceiling penetrations.

H. Waterflow Switches
1. Provide waterflow switch(es) with an adjustable delay from 0 to 60 seconds minimum for any waterflow switch not used for elevator power shunt.

PART 3– PERFORMANCE

3.1 INSTALLATION

A. Performance
1. All work must be performed by a licensed contractor, supervised, and tested by a qualified technician experienced in the installation and operation of the system type installed.
2. Provide installation, equipment, material, workmanship, fabrication, assembly, erection, examination, inspection and testing in accordance with NFPA 13 and the applicable codes and standards listed in this specification.

B. Concealment
1. Conceal all pipe in spaces that have finished ceilings.

C. Routing
1. Route pipe orthogonal to main building structure direction (parallel or perpendicular) in the area where the pipe is located.
2. Locate pipe as high as possible in areas without suspended ceilings.

D. Drains
1. Provide drains, drum drips, and low-point auxiliary drains as required by NFPA 13.
2. All Inspector Tests and Main Drains must discharge to a safe point outside the building.
3. Only low-point auxiliary drains that (1) do not contain an inspector's test and (2) are able to be throttled at the drain are permitted to discharge to a sink, wash basin or drain or capped or plugged at an accessible location. Drain must be capable of accepting the flow in order to discharge to the drain.
4. Direct drain connection to sewer is not allowed.

E. Welding
1. Welded joints form a fabrication shop are permitted. Field welding is not acceptable.

3.2 ACCESS

A. Access to Equipment
   1. Locate all valves, equipment and waterflow switches in an accessible location.
   2. Equipment located above ceilings shall be provided with access and be provided with a permanent sign visible from below the ceiling identifying the equipment location.

3.3 COORDINATION

A. Clearance
   1. Where other ceiling-mounted equipment or fixtures exists, install sprinklers and pipe as not to obstruct movement or operation of other equipment.
   2. Do not install pipe within required clearance areas of other operable equipment.
   3. Do not install pipe which imposes space required for egress, including pipe lower than 7’-6” (2250 mm) above finished horizontal floors or within 6’-8” (1625 mm) above the nose (edge) of any stair.
   4. Do not route pipe above electrical equipment in accordance with NFPA 70.

B. Coordination
   1. Coordinate locations for sprinklers, pipe, fittings and equipment to avoid conflict and work around other building systems.
   2. In cases of unavoidable conflict, the sprinkler contractor shall propose solution(s) and obtain approval from the project manager and affected trades before proceeding.

3.4 TESTING

A. Tests
   1. Provide underground flushing, hydrostatic, main drain, and all other applicable tests in accordance with NFPA 13, in the presence of the AHJ and building owner or owner’s representative.
   2. Each backflow prevention assembly shall be tested at system flow demand, including all applicable hose streams, as specified in NFPA 13. The Contractor shall provide all equipment and instruments necessary to conduct a complete forward flow test, including 2.5 inch diameter hoses, playpipe nozzles, calibrated pressure gauges, and pilot tube gauge. The Contractor shall provide all necessary supports to safely secure hoses and nozzles during the test. At the system demand flow, the pressure readings and pressure drop (friction) across the assembly shall be recorded. A metal placard shall be provided on the backflow prevention assembly that lists the pressure readings both upstream and downstream of the assembly, total pressure drop, and the system test flow rate determined during the preliminary testing. The pressure drop shall be compared to the manufacturer’s data and the readings observed during the final inspections and tests.
   3. Provide a copy of the record of all test reports to the building owner.

B. Instructions
   1. Furnish a qualified instructor for not less than two hours to instruct building personnel in the operation and maintenance of the system at a time and date requested by the building owner.

END OF SECTION 210000 (TES)

SECTION 220000 - PLUMBING SUMMARY OF WORK

PART 1 - GENERAL

1.1 RELATED DOCUMENTS

A. Drawings and general provisions of the Contract, including General and Supplementary Conditions, Division 22, and Division 1 Specification Sections, apply to this Section.

1.2 SUMMARY

A. This Section includes the following:

1. Work covered under Plumbing contract.
2. Work under other contracts.
3. Use of premises.
4. Owner's occupancy requirements.
5. Specification formats and conventions.

B. Related Sections include the following:

1. Division 22 Sections.

1.3 WORK COVERED UNDER PLUMBING CONTRACT

A. Provide all labor, materials, tools, machinery, equipment, and services necessary to complete the plumbing work under this contract. All systems and equipment shall be complete in every respect and all items of material, equipment, and labor shall be provided for a fully operational system. Coordinate the work with work of other trades so as to resolve conflicts without impeding job progress. The plumbing work includes the following:

B. PLUMBING:

1. Remove existing plumbing fixtures as indicated on plans, complete with all associated flushometers, faucets, piping, valves, cleanouts, traps, fittings, supports, etc.

2. Remove existing domestic cold and hot water piping as indicated on plans, complete with hose bibs, valves, fittings, supports, insulation, etc.

3. Remove existing sanitary waste and vent piping as indicated on plans, complete with traps, drains, fittings, supports, etc.

4. Furnish and install new plumbing fixtures, flushometers, faucets, piping, valves, cleanouts, accessories, etc. as specified on plans and in the specifications.

5. Furnish and install new floor drains, and related piping, traps, etc. Saw cut existing floor slabs as required, and patch to match existing.

6. Furnish and install new waste and vent piping, complete with cleanouts, fittings, hangers and supports. Saw cut existing floor slabs, chases, ceiling, walls and roof as required and patch. Coordinate all slopes and inverts and tie-in connections in field.
7. Furnish and install new domestic water piping as indicated on the plans, complete with valves, fittings, hangers, supports, insulation, etc. Coordinate all tie-in connections in field.

8. Verify the locations of existing waste mains in the field prior to saw-cutting the slabs to make the connections. Patch floor as required to match existing.

9. Provide insulation to all domestic cold water and hot water piping, etc.

10. Provide proper piping supports, hangers, anchors, etc.

11. Provide proper slope to all piping as per latest Plumbing Code and other applicable codes.

12. Pressure-test all piping for any leakage. Repair all leaks and perform testing until no leaks are found.

13. Provide identification tags with flow arrows for all plumbing piping. Provide valve tags for all valves. Provide a valve chart identifying all valve sizes and locations.

14. Furnish and install all ancillary equipment needed for a complete and proper installation including, but not limited to expansion joints, anchors, hangers, fittings, valves, unions, etc.

15. All cutting, patching and alteration work shall be performed.

16. The contractor shall furnish and install all items required for a complete and functioning plumbing system.

1.4 WORK UNDER OTHER CONTRACTS

A. General: Cooperate fully with separate contractors so work on those contracts may be carried out smoothly, without interfering with or delaying work under this Contract. Coordinate the Work of this Contract with work performed under separate contracts.

1.5 USE OF PREMISES

A. General: Each Contractor shall have limited use of premises for construction operations as indicated on Drawings by the Contract limits.

B. Use of Site: Limit use of premises to work in areas indicated. Do not disturb portions of Project site beyond areas in which the Work is indicated.

1. Owner Occupancy: Allow for Owner occupancy of Project site and use by the public.
2. Driveways and Entrances: Keep driveways parking garage, loading areas, and entrances serving premises clear and available to Owner, Owner's employees, and emergency vehicles at all times. Do not use these areas for parking or storage of materials.
   a. Schedule deliveries to minimize use of driveways and entrances.

b. Schedule deliveries to minimize space and time requirements for storage of materials and equipment on-site.

C. Use of Existing Building: Maintain existing building in a weather tight condition throughout construction period. Repair damage caused by construction operations. Protect building and its occupants during construction period.

1.6 OWNER'S OCCUPANCY REQUIREMENTS

A. Partial Owner Occupancy: Owner will occupy the premises during entire construction period, with the exception of areas under construction. Cooperate with Owner during construction operations to minimize conflicts and facilitate Owner usage. Perform the Work so as not to interfere with Owner's operations. Maintain existing exits, unless otherwise indicated.

1. Maintain access to existing walkways, corridors, and other adjacent occupied or used facilities. Do not close or obstruct walkways, corridors, or other occupied or used facilities without written permission from Owner and authorities having jurisdiction.
2. Provide not less than 72 hours' notice to Owner of activities that will affect Owner's operations.

B. Owner Occupancy of Completed Areas of Construction: Owner reserves the right to occupy and to place and install equipment in completed areas of building, before Substantial Completion, provided such occupancy does not interfere with completion of the Work. Such placement of equipment and partial occupancy shall not constitute acceptance of the total Work.

1. Architect will prepare a Certificate of Substantial Completion for each specific portion of the Work to be occupied before Owner occupancy.
2. Obtain a Certificate of Occupancy from authorities having jurisdiction before Owner occupancy.
3. Before partial Owner occupancy, mechanical and electrical systems shall be fully operational, and required tests and inspections shall be successfully completed.

1.7 SPECIFICATION FORMATS AND CONVENTIONS

A. Specification Format: The Specifications are organized into Divisions and Sections using the CSI/CSC's "MasterFormat" numbering system.

1. Section Identification: The Specifications use Section numbers and titles to help cross-referencing in the Contract Documents. Sections in the Project Manual are in numeric sequence; however, the sequence is incomplete because all available Section numbers are not used. Consult the table of contents at the beginning of the Project Manual to determine numbers and names of Sections in the Contract Documents.
2. Division 1: Sections in Division 1 govern the execution of the Work of all Sections in the Specifications.

B. Specification Content: The Specifications use certain conventions for the style of language and the intended meaning of certain terms, words, and phrases when used in particular situations. These conventions are as follows:

1. Abbreviated Language: Language used in the Specifications and other Contract Documents is abbreviated. Words and meanings shall be interpreted as appropriate.

Words implied, but not stated, shall be inferred as the sense requires. Singular words shall be interpreted as plural, and plural words shall be interpreted as singular where applicable as the context of the Contract Documents indicates.

2. Imperative mood and streamlined language are generally used in the Specifications. Requirements expressed in the imperative mood are to be performed by Contractor. Occasionally, the indicative or subjunctive mood may be used in the Section Text for clarity to describe responsibilities that must be fulfilled indirectly by Contractor or by others when so noted.
   a. The words "shall," "shall be," or "shall comply with," depending on the context, are implied where a colon (:) is used within a sentence or phrase.

1.8 MISCELLANEOUS PROVISIONS

PART 2 - PRODUCTS (Not Used)

PART 3 - EXECUTION (Not Used)

END OF SECTION 220000

SECTION 220501 - BASIC PLUMBING MATERIALS AND METHODS

PART 1 - GENERAL

1.1 RELATED DOCUMENTS

A. Drawings and general provisions of the Contract, including General and Supplementary Conditions and Division 1 Specification Sections, apply to this Section.

1.2 SUMMARY

A. This Section includes the following:

1. Piping materials and installation instructions common to most piping systems.
2. Transition fittings.
3. Dielectric fittings.
4. Mechanical sleeve seals.
5. Sleeves.
6. Escutcheons.
7. Grout.
8. Mechanical demolition.
9. Equipment installation requirements common to equipment sections.
10. Painting and finishing.
11. Supports and anchorages.

1.3 DEFINITIONS

A. Finished Spaces: Spaces other than mechanical and electrical equipment rooms, furred spaces, pipe and duct shafts, unheated spaces immediately below roof, spaces above ceilings, unexcavated spaces, crawlspaces, and tunnels.

B. Exposed, Interior Installations: Exposed to view indoors. Examples include finished occupied spaces and mechanical equipment rooms.

C. Exposed, Exterior Installations: Exposed to view outdoors or subject to outdoor ambient temperatures and weather conditions. Examples include rooftop locations.

D. Concealed, Interior Installations: Concealed from view and protected from physical contact by building occupants. Examples include above ceilings and in duct shafts.

E. Concealed, Exterior Installations: Concealed from view and protected from weather conditions and physical contact by building occupants but subject to outdoor ambient temperatures. Examples include installations within unheated shelters.

F. The following are industry abbreviations for rubber materials:

1. EPDM: Ethylene-propylene-diene terpolymer rubber.
2. NBR: Acrylonitrile-butadiene rubber.

1.4 SUBMITTALS

A. Product Data: For the following:

1. Transition fittings.
2. Dielectric fittings.
3. Mechanical sleeve seals.
4. Escutcheons.

B. Welding certificates.

1.5 QUALITY ASSURANCE

A. Steel Support Welding: Qualify processes and operators according to AWS D1.1, "Structural Welding Code--Steel."

B. Steel Pipe Welding: Qualify processes and operators according to ASME Boiler and Pressure Vessel Code: Section IX, "Welding and Brazing Qualifications."

1. Comply with provisions in ASME B31 Series, "Code for Pressure Piping."
2. Certify that each welder has passed AWS qualification tests for welding processes involved and that certification is current.

C. Electrical Characteristics for Mechanical Equipment: Equipment of higher electrical characteristics may be furnished provided such proposed equipment is approved in writing and connecting electrical services, circuit breakers, and conduit sizes are appropriately modified. If minimum energy ratings or efficiencies are specified, equipment shall comply with requirements.

1.6 DELIVERY, STORAGE, AND HANDLING

A. Deliver pipes and tubes with factory-applied end caps. Maintain end caps through shipping, storage, and handling to prevent pipe end damage and to prevent entrance of dirt, debris, and moisture.

1.7 COORDINATION

A. Arrange for pipe spaces, chases, slots, and openings in building structure during progress of construction, to allow for mechanical installations.

B. Coordinate installation of required supporting devices and set sleeves in poured-in-place concrete and other structural components as they are constructed.

C. Coordinate requirements for access panels and doors for mechanical items requiring access that are concealed behind finished surfaces.

PART 2 - PRODUCTS

2.1 MANUFACTURERS

A. In other Part 2 articles where subparagraph titles below introduce lists, the following requirements apply for product selection:

1. Available Manufacturers: Subject to compliance with requirements, manufacturers offering products that may be incorporated into the Work include, but are not limited to, the manufacturers specified.
2. Manufacturers: Subject to compliance with requirements, provide products by the manufacturers specified.

2.2 PIPE, TUBE, AND FITTINGS

A. Refer to individual Division 22 piping Sections for pipe, tube, and fitting materials and joining methods.

B. Pipe Threads: ASME B1.20.1 for factory-threaded pipe and pipe fittings.

2.3 JOINING MATERIALS

A. Refer to individual Division 22 piping Sections for special joining materials not listed below.

B. Pipe-Flange Gasket Materials: Suitable for chemical and thermal conditions of piping system contents.

1. ASME B16.21, nonmetallic, flat, asbestos-free, 1/8-inch maximum thickness unless thickness or specific material is indicated.
   a. Full-Face Type: For flat-face, Class 125, cast-iron and cast-bronze flanges.
   b. Narrow-Face Type: For raised-face, Class 250, cast-iron and steel flanges.
2. AWWA C110, rubber, flat face, 1/8 inch thick, unless otherwise indicated; and full-face or ring type, unless otherwise indicated.

C. Flange Bolts and Nuts: ASME B18.2.1, carbon steel, unless otherwise indicated.

D. Solder Filler Metals: ASTM B 32, lead-free alloys. Include water-flushable flux according to ASTM B 813.

E. Brazing Filler Metals: AWS A5.8, BCuP Series, copper-phosphorus alloys for general-duty brazing, unless otherwise indicated; and AWS A5.8, BAg1, silver alloy for refrigerant piping, unless otherwise indicated.

F. Welding Filler Metals: Comply with AWS D10.12 for welding materials appropriate for wall thickness and chemical analysis of steel pipe being welded.

2.4 DIELECTRIC FITTINGS

A. Description: Combination fitting of copper alloy and ferrous materials with threaded, solder-joint, plain, or weld-neck end connections that match piping system materials.

B. Insulating Material: Suitable for system fluid, pressure, and temperature.

C. Dielectric Unions: Factory-fabricated, union assembly, for 250-psig minimum working pressure at 180 deg F.

1. Manufacturers:
   a. Eclipse, Inc.
   b. Epco Sales, Inc.
   c. Watts Industries, Inc.; Water Products Div.
   d. Zurn Industries, Inc.; Wilkins Div.
   e. Or Approved Equal

D. Dielectric Flanges: Factory-fabricated, companion-flange assembly, for 150- or 300-psig minimum working pressure as required to suit system pressures.

1. Manufacturers:
   a. Capitol Manufacturing Co.
   b. Epco Sales, Inc.
   c. Watts Industries, Inc.; Water Products Div.
   d. Or Approved Equal

E. Dielectric-Flange Kits: Companion-flange assembly for field assembly. Include flanges, full-face- or ring-type neoprene or phenolic gasket, phenolic or polyethylene bolt sleeves, phenolic washers, and steel backing washers.

1. Manufacturers:
   a. Calpico, Inc.
   b. Central Plastics Company.
   c. Pipeline Seal and Insulator, Inc.
   d. Or Approved Equal

2. Separate companion flanges and steel bolts and nuts shall have 150- or 300-psig minimum working pressure where required to suit system pressures.

F. Dielectric Couplings: Galvanized-steel coupling with inert and noncorrosive, thermoplastic lining; threaded ends; and 300-psig minimum working pressure at 225 deg F.

1. Manufacturers:
   a. Calpico, Inc.
   b. Lochinvar Corp.
   c. Or Approved Equal

G. Dielectric Nipples: Electroplated steel nipple with inert and noncorrosive, thermoplastic lining; plain, threaded, or grooved ends; and 300-psig minimum working pressure at 225 deg F.

1. Manufacturers:
   a. Perfection Corp.
   b. Precision Plumbing Products, Inc.

c. Sioux Chief Manufacturing Co., Inc.
d. Or Approved Equal

2.5 MECHANICAL SLEEVE SEALS

A. Description: Modular sealing element unit, designed for field assembly, to fill annular space between pipe and sleeve.

1. Manufacturers:
   a. Advance Products & Systems, Inc.
   b. Calpico, Inc.
   c. Metraflex Co.
   d. Pipeline Seal and Insulator, Inc.
   e. Or Approved Equal

2. Sealing Elements: EPDM or NBR interlocking links shaped to fit surface of pipe. Include type and number required for pipe material and size of pipe.
3. Pressure Plates: Carbon steel or Stainless steel. Include two for each sealing element.
4. Connecting Bolts and Nuts: Carbon steel with corrosion-resistant coating or Stainless steel of length required to secure pressure plates to sealing elements. Include one for each sealing element.

2.6 SLEEVES

A. Galvanized-Steel Sheet: 0.0239-inch minimum thickness; round tube closed with welded longitudinal joint.

B. Steel Pipe: ASTM A 53, Type E, Grade B, Schedule 40, galvanized, plain ends.

C. Cast Iron: Cast or fabricated "wall pipe" equivalent to ductile-iron pressure pipe, with plain ends and integral waterstop, unless otherwise indicated.

D. Stack Sleeve Fittings: Manufactured, cast-iron sleeve with integral clamping flange. Include clamping ring and bolts and nuts for membrane flashing.

1. Underdeck Clamp: Clamping ring with set screws.

2.7 ESCUTCHEONS

A. Description: Manufactured wall and ceiling escutcheons and floor plates, with an ID to closely fit around pipe, tube, and insulation of insulated piping and an OD that completely covers opening.

B. One-Piece, Deep-Pattern Type: Deep-drawn, box-shaped brass with polished chrome-plated finish.

C. One-Piece/Split-Casting, Cast-Brass Type: With concealed hinge and set screw.

1. Finish: Polished chrome-plated.

D. One-Piece/Split-Plate, Stamped-Steel Type: With concealed or exposed-rivet hinge, set screw or spring clips, and chrome-plated finish.

E. One-Piece, Floor-Plate Type: Cast-iron floor plate.

F. Split-Casting, Floor-Plate Type: Cast brass with concealed hinge and set screw.

2.8 GROUT

A. Description: ASTM C 1107, Grade B, nonshrink and nonmetallic, dry hydraulic-cement grout.

1. Characteristics: Post-hardening, volume-adjusting, nonstaining, noncorrosive, nongaseous, and recommended for interior and exterior applications.
2. Design Mix: 5000-psi, 28-day compressive strength.
3. Packaging: Premixed and factory packaged.

PART 3 - EXECUTION

3.1 PIPING SYSTEMS - COMMON REQUIREMENTS

A. Install piping according to the following requirements and Division 22 Sections specifying piping systems.

B. Drawing plans, schematics, and diagrams indicate general location and arrangement of piping systems. Indicated locations and arrangements were used to size pipe and calculate friction loss, expansion, pump sizing, and other design considerations. Install piping as indicated unless deviations to layout are approved on Coordination Drawings.

C. Install piping in concealed locations, unless otherwise indicated and except in equipment rooms and service areas.

D. Install piping indicated to be exposed and piping in equipment rooms and service areas at right angles or parallel to building walls. Diagonal runs are prohibited unless specifically indicated otherwise.

E. Install piping above accessible ceilings to allow sufficient space for ceiling panel removal.

F. Install piping to permit valve servicing.

G. Install piping at indicated slopes.

H. Install piping free of sags and bends.

I. Install fittings for changes in direction and branch connections.

J. Install piping to allow application of insulation.

K. Select system components with pressure rating equal to or greater than system operating pressure.

L. Install escutcheons for penetrations of walls, ceilings, and floors according to the following:

1. New Piping:
   a. Piping with Fitting or Sleeve Protruding from Wall: One-piece, deep-pattern type.
   b. Chrome-Plated Piping: One-piece, cast-brass type with polished chrome-plated finish.
   c. Insulated Piping: One-piece, stamped-steel type with spring clips.
   d. Bare Piping at Wall and Floor Penetrations in Finished Spaces: One-piece, cast-brass type with polished chrome-plated finish.
   e. Bare Piping at Wall and Floor Penetrations in Finished Spaces: One-piece, stamped-steel type.
   f. Bare Piping at Ceiling Penetrations in Finished Spaces: Cast-brass type with polished chrome-plated finish.
   g. Bare Piping in Unfinished Service Spaces: One-piece, cast-brass type with polished chrome-plated finish.
   h. Bare Piping in Equipment Rooms: One-piece, cast-brass type or One-piece, stamped steel type.
   i. Bare Piping at Floor Penetrations in Equipment Rooms: One-piece, floor-plate type.

M. Install sleeves for pipes passing through concrete and masonry walls and concrete floor and roof slabs.

N. Install sleeves for pipes passing through concrete and masonry walls, gypsum-board partitions, and concrete floor and roof slabs.

1. Cut sleeves to length for mounting flush with both surfaces.
   a. Exception: Extend sleeves installed in floors of mechanical equipment areas or other wet areas 2 inches above finished floor level. Extend cast-iron sleeve fittings below floor slab as required to secure clamping ring if ring is specified.
2. Install sleeves in new walls and slabs as new walls and slabs are constructed.
3. Install sleeves that are large enough to provide 1/4-inch annular clear space between sleeve and pipe or pipe insulation. Use the following sleeve materials:
   a. Steel Pipe Sleeves: For pipes smaller than NPS 6 (DN 150).
   b. Steel Sheet Sleeves: For pipes NPS 6 (DN 150) and larger, penetrating gypsum-board partitions.
   c. Stack Sleeve Fittings: For pipes penetrating floors with membrane waterproofing. Secure flashing between clamping flanges. Install section of cast-iron soil pipe to extend sleeve to 2 inches above finished floor level. Refer to Division 7 Section "Sheet Metal Flashing and Trim" for flashing.
      1) Seal space outside of sleeve fittings with grout.
4. Except for underground wall penetrations, seal annular space between sleeve and pipe or pipe insulation, using joint sealants appropriate for size, depth, and location of joint. Refer to Division 7 Section "Joint Sealants" for materials and installation.

O. Aboveground, Exterior-Wall Pipe Penetrations: Seal penetrations using sleeves and mechanical sleeve seals. Select sleeve size to allow for 1-inch annular clear space between pipe and sleeve for installing mechanical sleeve seals.

1. Install steel pipe for sleeves smaller than 6 inches in diameter.
2. Install cast-iron "wall pipes" for sleeves 6 inches and larger in diameter.
3. Mechanical Sleeve Seal Installation: Select type and number of sealing elements required for pipe material and size. Position pipe in center of sleeve. Assemble mechanical sleeve seals and install in annular space between pipe and sleeve. Tighten

bolts against pressure plates that cause sealing elements to expand and make watertight seal.

P. Underground, Exterior-Wall Pipe Penetrations: Install cast-iron "wall pipes" for sleeves. Seal pipe penetrations using mechanical sleeve seals. Select sleeve size to allow for 1-inch annular clear space between pipe and sleeve for installing mechanical sleeve seals.

1. Mechanical Sleeve Seal Installation: Select type and number of sealing elements required for pipe material and size. Position pipe in center of sleeve. Assemble mechanical sleeve seals and install in annular space between pipe and sleeve. Tighten bolts against pressure plates that cause sealing elements to expand and make watertight seal.

Q. Fire-Barrier Penetrations: Maintain indicated fire rating of walls, partitions, ceilings, and floors at pipe penetrations. Seal pipe penetrations with firestop materials. Refer to Division 7 Section for materials.

R. Verify final equipment locations for roughing-in.

S. Refer to equipment specifications in other Sections of these Specifications for roughing-in requirements.

3.2 PIPING JOINT CONSTRUCTION

A. Join pipe and fittings according to the following requirements and Division 22 Sections specifying piping systems.

B. Ream ends of pipes and tubes and remove burrs. Bevel plain ends of steel pipe.

C. Remove scale, slag, dirt, and debris from inside and outside of pipe and fittings before assembly.

D. Soldered Joints: Apply ASTM B 813, water-flushable flux, unless otherwise indicated, to tube end. Construct joints according to ASTM B 828 or CDA's "Copper Tube Handbook," using lead-free solder alloy complying with ASTM B 32.

E. Brazed Joints: Construct joints according to AWS's "Brazing Handbook," "Pipe and Tube" Chapter, using copper-phosphorus brazing filler metal complying with AWS A5.8.

F. Threaded Joints: Thread pipe with tapered pipe threads according to ASME B1.20.1. Cut threads full and clean using sharp dies. Ream threaded pipe ends to remove burrs and restore full ID. Join pipe fittings and valves as follows:

1. Apply appropriate tape or thread compound to external pipe threads unless dry seal threading is specified.
2. Damaged Threads: Do not use pipe or pipe fittings with threads that are corroded or damaged. Do not use pipe sections that have cracked or open welds.

G. Welded Joints: Construct joints according to AWS D10.12, using qualified processes and welding operators according to Part 1 "Quality Assurance" Article.

H. Flanged Joints: Select appropriate gasket material, size, type, and thickness for service application. Install gasket concentrically positioned. Use suitable lubricants on bolt threads.

3.3 PIPING CONNECTIONS

A. Make connections according to the following, unless otherwise indicated:

1. Install unions, in piping NPS 2 (DN 50) and smaller, adjacent to each valve and at final connection to each piece of equipment.
2. Install flanges, in piping NPS 2-1/2 (DN 65) and larger, adjacent to flanged valves and at final connection to each piece of equipment.
3. Dry Piping Systems: Install dielectric unions and flanges to connect piping materials of dissimilar metals.
4. Wet Piping Systems: Install dielectric coupling and nipple fittings to connect piping materials of dissimilar metals.

3.4 EQUIPMENT INSTALLATION - COMMON REQUIREMENTS

A. Install equipment to allow maximum possible headroom unless specific mounting heights are not indicated.

B. Install equipment level and plumb, parallel and perpendicular to other building systems and components in exposed interior spaces, unless otherwise indicated.

C. Install mechanical equipment to facilitate service, maintenance, and repair or replacement of components. Connect equipment for ease of disconnecting, with minimum interference to other installations. Extend grease fittings to accessible locations.

D. Install equipment to allow right of way for piping installed at required slope.

3.5 PAINTING

A. Painting of mechanical systems, equipment, and components is specified.

B. Damage and Touchup: Repair marred and damaged factory-painted finishes with materials and procedures to match original factory finish.

3.6 ERECTION OF METAL SUPPORTS AND ANCHORAGES

A. Cut, fit, and place miscellaneous metal supports accurately in location, alignment, and elevation to support and anchor mechanical materials and equipment.

B. Field Welding: Comply with AWS D1.1.

3.7 ERECTION OF WOOD SUPPORTS AND ANCHORAGES

A. Cut, fit, and place wood grounds, nailers, blocking, and anchorages to support, and anchor mechanical materials and equipment.

B. Select fastener sizes that will not penetrate members if opposite side will be exposed to view or will receive finish materials. Tighten connections between members. Install fasteners without splitting wood members.

C. Attach to substrates as required to support applied loads.

3.8 GROUTING

A. Mix and install grout for mechanical equipment base bearing surfaces, pump and other equipment base plates, and anchors.

B. Clean surfaces that come into contact with grout.

C. Provide forms as required for placement of grout.

D. Avoid air entrapment during placement of grout.

E. Place grout, completely filling equipment bases.

F. Place grout around anchors.

G. Cure placed grout.

END OF SECTION 220501

SECTION 220523 - PLUMBING VALVES

PART 1 - GENERAL

1.1 RELATED DOCUMENTS

A. Drawings and general provisions of the Contract, including General and Supplementary Conditions and Division 1 Specification Sections, apply to this Section.

1.2 SUMMARY

A. This Section includes the following general-duty valves (Lead-Free Type):

1. Copper-alloy ball valves.
2. Ferrous-alloy ball valves.
3. Bronze check valves.

B. Related Sections include the following:

1. Division 22 piping Sections for specialty valves applicable to those Sections only.

C. All valves and fittings for potable water system shall be lead-free type in compliant with requirements of NSF/ANSI Standard 61.

1.3 DEFINITIONS

A. The following are standard abbreviations for valves:

1. CWP: Cold working pressure.
2. EPDM: Ethylene-propylene-diene terpolymer rubber.
3. NBR: Acrylonitrile-butadiene rubber.
4. PTFE: Polytetrafluoroethylene plastic.
5. SWP: Steam working pressure.
6. TFE: Tetrafluoroethylene plastic.

1.4 SUBMITTALS

A. Product Data: For each type of valve indicated. Include body, seating, and trim materials; valve design; pressure and temperature classifications; end connections; arrangement; dimensions; and required clearances. Include list indicating valve and its application. Include rated capacities; shipping, installed, and operating weights; furnished specialties; and accessories.

1.5 QUALITY ASSURANCE

A. ASME Compliance: ASME B31.1 for power piping valves and ASME B31.9 for building services piping valves.

1. Exceptions: Domestic hot- and cold-water piping valves unless referenced.

B. ASME Compliance for Ferrous Valves: ASME B16.10 and ASME B16.34 for dimension and design criteria.

C. NSF Compliance: NSF 61 for valve materials for potable-water service.

1.6 DELIVERY, STORAGE, AND HANDLING

A. Prepare valves for shipping as follows:

1. Protect internal parts against rust and corrosion.
2. Protect threads, flange faces, and weld ends.
3. Set ball valves open to minimize exposure of functional surfaces.
4. Block check valves in either closed or open position.

B. Use the following precautions during storage:

1. Maintain valve end protection.
2. Store valves indoors and maintain at higher than ambient dew-point temperature. If outdoor storage is necessary, store valves off the ground in watertight enclosures.

C. Use sling to handle large valves; rig sling to avoid damage to exposed parts. Do not use hand-wheels or stems as lifting or rigging points.

PART 2 - PRODUCTS

2.1 MANUFACTURERS

A. In other Part 2 articles where subparagraph titles below introduce lists, the following requirements apply for product selection:

1. Available Manufacturers: Subject to compliance with requirements, manufacturers offering products that may be incorporated into the Work include, but are not limited to, the manufacturers specified.
2. Manufacturers: Subject to compliance with requirements, provide products by the manufacturers specified.

2.2 VALVES, GENERAL

A. Refer to Part 3 "Valve Applications" Article for applications of valves.

B. Valve Pressure and Temperature Ratings: Not less than indicated and as required for system pressures and temperatures.

C. Valve Sizes: Same as upstream pipe, unless otherwise indicated.

D. Valve Actuators:

1. Chain wheel: For attachment to valves, of size and mounting height, as indicated in the "Valve Installation" Article in Part 3.
2. Hand wheel: For valves other than quarter-turn types.
3. Lever Handle: For quarter-turn valves NPS 6 (DN 150) and smaller, except plug valves.

E. Extended Valve Stems: On insulated valves.

F. Valve Flanges: ASME B16.1 for cast-iron valves, ASME B16.5 for steel valves, and ASME B16.24 for bronze valves.

G. Valve Bypass and Drain Connections: MSS SP-45.

2.3 COPPER-ALLOY BALL VALVES

A. Available Manufacturers:

B. Manufacturers:

1. One-Piece, Copper-Alloy Ball Valves:
   a. American Valve, Inc.
   b. Conbraco Industries, Inc.; Apollo Div.
   c. Grinnell Corporation.
   d. Kitz Corporation of America.
   e. Legend Valve & Fitting, Inc.
   f. NIBCO INC.
   g. Watts Industries, Inc.; Water Products Div.
   h. Or Approved Equal

C. Copper-Alloy Ball Valves, General: MSS SP-110, full port type.

D. One-Piece, Copper-Alloy Ball Valves: Brass or bronze body with chrome-plated bronze ball, PTFE or TFE seats, full port type.

2.4 FERROUS-ALLOY BALL VALVES

A. Available Manufacturers:

B. Manufacturers:

1. American Valve, Inc.
2. Conbraco Industries, Inc.; Apollo Div.
3. Cooper Cameron Corp.; Cooper Cameron Valves Div.
4. Kitz Corporation of America.
5. KTM Products, Inc.
6. Milwaukee Valve Company.
7. NIBCO INC.
8. Or Approved Equal

C. Ferrous-Alloy Ball Valves, General: MSS SP-72, with flanged ends, full port.

D. Ferrous-Alloy Ball Valves: Class 150, full port.

2.5 BRONZE CHECK VALVES

A. Available Manufacturers:

B. Manufacturers:

1. Type 1, Bronze, Horizontal Lift Check Valves with Metal Disc:
   a. Cincinnati Valve Co.
   b. Red-White Valve Corp.
   c. Walworth Co.
   d. NIBCO Inc.
   e. Or Approved Equal

2. Type 1, Bronze, Vertical Lift Check Valves with Metal Disc:
   a. Cincinnati Valve Co.
   b. Red-White Valve Corp.
   c. Walworth Co.
   d. NIBCO INC.
   e. Or Approved Equal

3. Type 3, Bronze, Swing Check Valves with Metal Disc:
   a. American Valve, Inc.
   b. Grinnell Corporation.
   c. Kitz Corporation of America.
   d. Legend Valve & Fitting, Inc.
   e. Milwaukee Valve Company.
   f. Red-White Valve Corp.
   g. Walworth Co.
   h. Watts Industries, Inc.; Water Products Div.
   i. Or Approved Equal

C. Bronze Check Valves, General: MSS SP-80.

D. Type 1, Class 150, Bronze, Horizontal Lift Check Valves: Bronze body with bronze disc and seat.

E. Type 1, Class 150, Bronze, Vertical Lift Check Valves: Bronze body with bronze disc and seat.

F. Type 3, Class 150, Bronze, Swing Check Valves: Bronze body with bronze disc and seat.

PART 3 - EXECUTION

3.1 EXAMINATION

A. Examine piping system for compliance with requirements for installation tolerances and other conditions affecting performance.

1. Proceed with installation only after unsatisfactory conditions have been corrected.

B. Examine valve interior for cleanliness, freedom from foreign matter, and corrosion. Remove special packing materials, such as blocks, used to prevent disc movement during shipping and handling.

C. Operate valves in positions from fully open to fully closed. Examine guides and seats made accessible by such operations.

D. Examine threads on valve and mating pipe for form and cleanliness.

E. Examine mating flange faces for conditions that might cause leakage. Check bolting for proper size, length, and material. Verify that gasket is of proper size, that its material composition is suitable for service, and that it is free from defects and damage.

F. Do not attempt to repair defective valves; replace with new valves.

3.2 VALVE APPLICATIONS

A. Refer to piping Sections for specific valve applications. If valve applications are not indicated, use the following:

1. Shutoff Service: Ball valves.
2. Throttling Service: Ball or globe valves.

B. If valves with specified SWP classes or CWP ratings are not available, the same types of valves with higher SWP class or CWP ratings may be substituted.

C. Heating Water Piping: Use the following types of valves:

1. Ball Valves, NPS 2 (DN 50) and Smaller: One or Two-piece, CWP rating, copper alloy.
2. Ball Valves, NPS 2-1/2 (DN 65) and Larger: Class 150, ferrous alloy.
3. Swing Check Valves, NPS 2 (DN 50) and Smaller: Type 4, Class 150, bronze.
4. Swing Check Valves, NPS 2-1/2 (DN 65) and Larger: Type II, Class 125, gray iron.

3.3 VALVE INSTALLATION

A. Piping installation requirements are specified in other Division 22 Sections. Drawings indicate general arrangement of piping, fittings, and specialties.

B. Install valves with unions or flanges at each piece of equipment arranged to allow service, maintenance, and equipment removal without system shutdown.

C. Locate valves for easy access and provide separate support where necessary.

D. Install valves in horizontal piping with stem at or above center of pipe.

E. Install valves in position to allow full stem movement.

F. Install check valves for proper direction of flow and as follows:

1. Swing Check Valves: In horizontal position with hinge pin level.

3.4 JOINT CONSTRUCTION

A. Refer to Division 22 Section "Basic Plumbing Materials and Methods" for basic piping joint construction.

B. Soldered Joints: Use ASTM B 813, water-flushable, lead-free flux; ASTM B 32, lead-free-alloy solder; and ASTM B 828 procedure, unless otherwise indicated.

3.5 ADJUSTING

A. Adjust or replace valve packing after piping systems have been tested and put into service but before final adjusting and balancing. Replace valves if persistent leaking occurs.

END OF SECTION 220523

SECTION 220529 - HANGERS AND SUPPORTS FOR PLUMBING PIPING AND EQUIPMENT

PART 1 - GENERAL

1.1 RELATED DOCUMENTS

A. Drawings and general provisions of the Contract, including General and Supplementary Conditions and Division 1 Specification Sections, apply to this Section.

1.2 SUMMARY

A. Section Includes:

1. Metal pipe hangers and supports.
2. Trapeze pipe hangers.
3. Fiberglass pipe hangers.
4. Metal framing systems.
5. Fiberglass strut systems.
6. Thermal-hanger shield inserts.
7. Fastener systems.
8. Pipe stands.
9. Equipment supports.

1.3 DEFINITIONS

A. MSS: Manufacturers Standardization Society of The Valve and Fittings Industry Inc.

B. Terminology: As defined in MSS SP-90, "Guidelines on Terminology for Pipe Hangers and Supports."

1.4 PERFORMANCE REQUIREMENTS

A. Delegated Design: Design trapeze pipe hangers and equipment supports, including comprehensive engineering analysis by a qualified professional engineer, using performance requirements and design criteria indicated.

B. Structural Performance: Hangers and supports for plumbing piping and equipment shall withstand the effects of gravity loads and stresses within limits and under conditions indicated according to ASCE/SEI 7.

1. Design supports for multiple pipes, including pipe stands, capable of supporting combined weight of supported systems, system contents, and test water.
2. Design equipment supports capable of supporting combined operating weight of supported equipment and connected systems and components.
3. Design seismic-restraint hangers and supports for piping and equipment.

1.5 SUBMITTALS

A. Product Data: For the following:

1. Steel pipe hangers and supports.
2. Fiberglass pipe hangers.
3. Thermal-hanger shield inserts.
4. Powder-actuated fastener systems.
5. Pipe positioning systems.

B. Shop Drawings: Show fabrication and installation details and include calculations for the following:

1. Trapeze pipe hangers. Include Product Data for components.
2. Metal framing systems. Include Product Data for components.
3. Fiberglass strut systems. Include Product Data for components.
4. Pipe stands. Include Product Data for components.
5. Equipment supports.
6. Welding certificates.

1.6 QUALITY ASSURANCE

A. Welding: Qualify procedures and personnel according to AWS D1.1, "Structural Welding Code--Steel."

B. Welding: Qualify procedures and personnel according to the following:

1. AWS D1.1, "Structural Welding Code--Steel."
2. AWS D1.2, "Structural Welding Code--Aluminum."
3. AWS D1.3, "Structural Welding Code--Sheet Steel."
4. AWS D1.4, "Structural Welding Code--Reinforcing Steel."
5. ASME Boiler and Pressure Vessel Code: Section IX.

PART 2 - PRODUCTS

2.1 METAL PIPE HANGERS AND SUPPORTS

A. Carbon-Steel Pipe Hangers and Supports:

1. Description: MSS SP-58, Types 1 through 58, factory-fabricated components.
2. Galvanized Metallic Coatings: Pre-galvanized or hot dipped.
3. Nonmetallic Coatings: Plastic coating, jacket, or liner.
4. Padded Hangers: Hanger with fiberglass or other pipe insulation pad or cushion to support bearing surface of piping.
5. Hanger Rods: Continuous-thread rod, nuts, and washer made of carbon steel.

B. Copper Pipe Hangers:

1. Manufacturers' catalogs indicate that copper pipe hangers are small, typically NPS 4 (DN 100) or smaller, and types available are limited.
2. Description: MSS SP-58, Types 1 through 58, copper-coated-steel, factory-fabricated components.
3. Hanger Rods: Continuous-thread rod, nuts, and washer made of copper-coated steel.

2.2 TRAPEZE PIPE HANGERS

A. Description: MSS SP-69, Type 59, shop- or field-fabricated pipe-support assembly made from structural carbon-steel shapes with MSS SP-58 carbon-steel hanger rods, nuts, saddles, and U-bolts.

2.3 THERMAL-HANGER SHIELD INSERTS

A. Insulation-Insert Material for Cold Piping: ASTM C 552, Type II cellular glass with 100-psig (688-kPa) or ASTM C 591, Type VI, Grade 1 polyisocyanurate with 125-psig (862-kPa) minimum compressive strength and vapor barrier.

B. Insulation-Insert Material for Hot Piping: Water-repellent treated, ASTM C 533, Type I calcium silicate with 100-psig (688-kPa) ASTM C 552, Type II cellular glass with 100-psig (688-kPa) or [ASTM C 591, Type VI, Grade 1 polyisocyanurate with 125-psig (862-kPa) minimum compressive strength.

C. For Trapeze or Clamped Systems: Insert and shield shall cover entire circumference of pipe.

D. For Clevis or Band Hangers: Insert and shield shall cover lower 180 degrees of pipe.

E. Insert Length: Extend 2 inches beyond sheet metal shield for piping operating below ambient air temperature.

2.4 FASTENER SYSTEMS

A. Powder-Actuated Fasteners: Threaded-steel stud, for use in hardened Portland cement concrete with pull-out, tension, and shear capacities appropriate for supported loads and building materials where used.

B. Mechanical-Expansion Anchors: Insert-wedge-type, [zinc-coated] [stainless-] steel anchors, for use in hardened portland cement concrete; with pull-out, tension, and shear capacities appropriate for supported loads and building materials where used.

2.5 PIPE STANDS

A. General Requirements for Pipe Stands: Shop- or field-fabricated assemblies made of manufactured corrosion-resistant components to support roof-mounted piping.

B. Compact Pipe Stand: One-piece plastic unit with integral-rod roller, pipe clamps, or V-shaped cradle to support pipe, for roof installation without membrane penetration.

C. Low-Type, Single-Pipe Stand: One-piece stainless-steel base unit with plastic roller, for roof installation without membrane penetration.

D. High-Type, Single-Pipe Stand:

1. Description: Assembly of base, vertical and horizontal members, and pipe support, for roof installation without membrane penetration.
2. Base: Stainless steel.
3. Vertical Members: Two or more cadmium-plated-steel or stainless-steel, continuous-thread rods.
4. Horizontal Member: Cadmium-plated-steel or stainless-steel rod with plastic or stainless steel, roller-type pipe support.

5. Curb-Mounted-Type Pipe Stands: Shop- or field-fabricated pipe supports made from structural-steel shapes, continuous-thread rods, and rollers, for mounting on permanent stationary roof curb.

2.6 EQUIPMENT SUPPORTS

A. Description: Welded, shop- or field-fabricated equipment support made from structural carbon steel shapes.

2.7 MISCELLANEOUS MATERIALS

A. Structural Steel: ASTM A 36/A 36M, carbon-steel plates, shapes, and bars; black and galvanized.

B. Grout: ASTM C 1107, factory-mixed and -packaged, dry, hydraulic-cement, non-shrink and nonmetallic grout; suitable for interior and exterior applications.

1. Properties: Non-staining, noncorrosive, and nongaseous.
2. Design Mix: 5000-psi (34.5-MPa), 28-day compressive strength.

PART 3 - EXECUTION

3.1 HANGER AND SUPPORT INSTALLATION

A. Metal Pipe-Hanger Installation: Comply with MSS SP-69 and MSS SP-89. Install hangers, supports, clamps, and attachments as required to properly support piping from the building structure.

B. Metal Trapeze Pipe-Hanger Installation: Comply with MSS SP-69 and MSS SP-89. Arrange for grouping of parallel runs of horizontal piping, and support together on field-fabricated trapeze pipe hangers.

C. Pipes of Various Sizes: Support together and space trapezes for smallest pipe size or install intermediate supports for smaller diameter pipes as specified for individual pipe hangers.

D. Field fabricate from ASTM A 36/A 36M, carbon-steel shapes selected for loads being supported. Weld steel according to AWS D1.1/D1.1M.

E. Metal framing system in first paragraph below requires calculating and detailing at each use.

F. Metal Framing System Installation: Arrange for grouping of parallel runs of piping, and support together on field-assembled metal framing systems.

G. Fiberglass strut system in first paragraph below requires calculating and detailing at each use.

H. Thermal-Hanger Shield Installation: Install in pipe hanger or shield for insulated piping

I. Fastener System Installation:

1. Verify suitability of fasteners in two subparagraphs below for use in lightweight concrete or concrete slabs less than 4 inches thick.
2. Install powder-actuated fasteners for use in lightweight concrete or concrete slabs less than 4 inches thick in concrete after concrete is placed and completely cured. Use operators that are licensed by powder-actuated tool manufacturer. Install fasteners according to powder-actuated tool manufacturer's operating manual.

3. Install mechanical-expansion anchors in concrete after concrete is placed and completely cured. Install fasteners according to manufacturer's written instructions.

J. Pipe stand in first paragraph below requires calculating and detailing at each use.

K. Pipe Stand Installation:

1. Pipe Stand Types except Curb-Mounted Type: Assemble components and mount on smooth roof surface. Do not penetrate roof membrane.
2. Curb-Mounted-Type Pipe Stands: Assemble components or fabricate pipe stand and mount on permanent, stationary roof curb.
3. Install hangers and supports complete with necessary attachments, inserts, bolts, rods, nuts, washers, and other accessories.

L. Equipment support in first paragraph below requires calculating and detailing at each use.

M. Equipment Support Installation:

1. Fabricate from welded-structural-steel shapes.
2. Install hangers and supports to allow controlled thermal and seismic movement of piping systems, to permit freedom of movement between pipe anchors, and to facilitate action of expansion joints, expansion loops, expansion bends, and similar units.
3. Install lateral bracing with pipe hangers and supports to prevent swaying.
4. Install building attachments within concrete slabs or attach to structural steel.
5. Install additional attachments at concentrated loads, including valves, flanges, and strainers, [NPS 2-1/2 (DN 65)] and larger and at changes in direction of piping.
6. Install concrete inserts before concrete is placed; fasten inserts to forms and install reinforcing bars through openings at top of inserts

N. Load Distribution: Install hangers and supports so that piping live and dead loads and stresses from movement will not be transmitted to connected equipment.

O. Pipe Slopes: Install hangers and supports to provide indicated pipe slopes and to not exceed maximum pipe deflections allowed by ASME B31.9 for building services piping.

P. Insulated Piping:

1. Attach clamps and spacers to piping.
2. Piping Operating Above Ambient Air Temperature: Clamp may project through insulation.
3. Piping Operating Below Ambient Air Temperature: Use thermal-hanger shield insert with clamp sized to match OD of insert.
4. Do not exceed pipe stress limits allowed by ASME B31.9 for building services piping.
5. Install MSS SP-58, Type 39, protection saddles if insulation without vapor barrier is indicated.
6. Fill interior voids with insulation that matches adjoining insulation.
   a. Option: Thermal-hanger shield inserts may be used. Include steel weight-distribution plate for pipe NPS 4 (DN 100) and larger if pipe is installed on rollers.
7. High-compressive-strength inserts may permit use of shorter shields or shields with less arc span. Revise first subparagraph below to suit Project.
8. Install MSS SP-58, Type 40, protective shields on cold piping with vapor barrier. Shields shall span an arc of 180 degrees.
   a. Option: Thermal-hanger shield inserts may be used. Include steel weight-distribution plate for pipe NPS 4 (DN 100) and larger if pipe is installed on rollers.

Q. Shield Dimensions for Pipe: Not less than the following:

1. NPS 1/4 to NPS 3-1/2 (DN 8 to DN 90): 12 inches long and 0.048 inch thick.
2. NPS 4 (DN 100): 12 inches long and 0.06 inch thick.
3. NPS 5 and NPS 6 (DN 125 and DN 150): 18 inches long and 0.06 inch thick.
4. NPS 8 to NPS 14 (DN 200 to DN 350): 24 inches long and 0.075 inch thick.
5. NPS 16 to NPS 24 (DN 400 to DN 600): 24 inches long and 0.105 inch thick.

R. Pipes NPS 8 (DN 200) and Larger: Include wood or reinforced calcium-silicate-insulation inserts of length at least as long as protective shield.

S. Thermal-Hanger Shields: Install with insulation same thickness as piping insulation.

3.2 EQUIPMENT SUPPORTS

A. Fabricate structural-steel stands to suspend equipment from structure overhead or to support equipment above floor.

B. Grouting: Place grout under supports for equipment and make bearing surface smooth.

C. Provide lateral bracing, to prevent swaying, for equipment supports.

3.3 ADJUSTING

A. Hanger Adjustments: Adjust hangers to distribute loads equally on attachments and to achieve indicated slope of pipe.

B. Trim excess length of continuous-thread hanger and support rods to 1-1/2 inches.

3.4 PAINTING

A. Touchup: Clean field welds and abraded areas of shop paint. Paint exposed areas immediately after erecting hangers and supports. Use same materials as used for shop painting. Comply with SSPC-PA 1 requirements for touching up field-painted surfaces.

B. Apply paint by brush or spray to provide a minimum dry film thickness of 2.0 mils.

C. Touchup: Cleaning and touchup painting of field welds, bolted connections, and abraded areas of shop paint on miscellaneous metal are specified in Section 099123 "Interior Painting".

D. Galvanized Surfaces: Clean welds, bolted connections, and abraded areas and apply galvanizing-repair paint to comply with ASTM A 780.

3.5 HANGER AND SUPPORT SCHEDULE

A. Specific hanger and support requirements are in Sections specifying piping systems and equipment.

B. Comply with MSS SP-69 for pipe-hanger selections and applications that are not specified in piping system Sections.

C. Use hangers and supports with galvanized metallic coatings for piping and equipment that will not have field-applied finish.

D. Use nonmetallic coatings on attachments for electrolytic protection where attachments are in direct contact with copper tubing.

E. Use carbon-steel pipe hangers and supports, metal trapeze pipe hangers and metal framing systems and attachments for general service applications.

F. Use copper-plated pipe hangers and copper attachments for copper piping and tubing.

G. Use padded hangers for piping that is subject to scratching.

H. Use thermal-hanger shield inserts for insulated piping and tubing.

I. Horizontal-Piping Hangers and Supports: Unless otherwise indicated and except as specified in piping system Sections, install the following types:

1. Adjustable, Steel Clevis Hangers (MSS Type 1): For suspension of non-insulated or insulated, stationary pipes NPS 1/2 to NPS 30 (DN 15 to DN 750).
2. Yoke-Type Pipe Clamps (MSS Type 2): For suspension of up to 1050 deg F, pipes NPS 4 to NPS 24 (DN 100 to DN 600), requiring up to 4 inches of insulation.
3. Carbon- or Alloy-Steel, Double-Bolt Pipe Clamps (MSS Type 3): For suspension of pipes NPS 3/4 to NPS 36 (DN 20 to DN 900), requiring clamp flexibility and up to 4 inches of insulation.
4. Steel Pipe Clamps (MSS Type 4): For suspension of cold and hot pipes NPS 1/2 to NPS 24 (DN 15 to DN 600) if little or no insulation is required.
5. Pipe Hangers (MSS Type 5): For suspension of pipes NPS 1/2 to NPS 4 (DN 15 to DN 100), to allow off-center closure for hanger installation before pipe erection.
6. Adjustable, Swivel Split- or Solid-Ring Hangers (MSS Type 6): For suspension of non-insulated, stationary pipes NPS 3/4 to NPS 8 (DN 20 to DN 200).
7. Adjustable, Steel Band Hangers (MSS Type 7): For suspension of non-insulated, stationary pipes NPS 1/2 to NPS 8 (DN 15 to DN 200).
8. Adjustable Band Hangers (MSS Type 9): For suspension of non-insulated, stationary pipes NPS 1/2 to NPS 8 (DN 15 to DN 200).
9. Adjustable, Swivel-Ring Band Hangers (MSS Type 10): For suspension of non-insulated, stationary pipes NPS 1/2 to NPS 8 (DN 15 to DN 200).
10. Split Pipe Ring with or without Turnbuckle Hangers (MSS Type 11): For suspension of non-insulated, stationary pipes NPS 3/8 to NPS 8 (DN 10 to DN 200).
11. Extension Hinged or Two-Bolt Split Pipe Clamps (MSS Type 12): For suspension of non-insulated, stationary pipes NPS 3/8 to NPS 3 (DN 10 to DN 80).
12. U-Bolts (MSS Type 24): For support of heavy pipes NPS 1/2 to NPS 30 (DN 15 to DN 750).
13. Clips (MSS Type 26): For support of insulated pipes not subject to expansion or contraction.
14. Pipe Saddle Supports (MSS Type 36): For support of pipes NPS 4 to NPS 36 (DN 100 to DN 900), with steel-pipe base stanchion support and cast-iron floor flange or carbon-steel plate.
15. Pipe Stanchion Saddles (MSS Type 37): For support of pipes NPS 4 to NPS 36 (DN 100 to DN 900), with steel-pipe base stanchion support and cast-iron floor flange or carbon-steel plate, and with U-bolt to retain pipe.
16. Adjustable Pipe Saddle Supports (MSS Type 38): For stanchion-type support for pipes NPS 2-1/2 to NPS 36 (DN 65 to DN 900) if vertical adjustment is required, with steel-pipe base stanchion support and cast-iron floor flange.
17. Single-Pipe Rolls (MSS Type 41): For suspension of pipes NPS 1 to NPS 30 (DN 25 to DN 750), from two rods if longitudinal movement caused by expansion and contraction might occur.

18. Adjustable Roller Hangers (MSS Type 43): For suspension of pipes NPS 2-1/2 to NPS 24 (DN 65 to DN 600), from single rod if horizontal movement caused by expansion and contraction might occur.
19. Complete Pipe Rolls (MSS Type 44): For support of pipes NPS 2 to NPS 42 (DN 50 to DN 1050) if longitudinal movement caused by expansion and contraction might occur but vertical adjustment is not necessary.
20. Pipe Roll and Plate Units (MSS Type 45): For support of pipes NPS 2 to NPS 24 (DN 50 to DN 600) if small horizontal movement caused by expansion and contraction might occur and vertical adjustment is not necessary.
21. Adjustable Pipe Roll and Base Units (MSS Type 46): For support of pipes NPS 2 to NPS 30 (DN 50 to DN 750) if vertical and lateral adjustment during installation might be required in addition to expansion and contraction.

J. Vertical-Piping Clamps: Unless otherwise indicated and except as specified in piping system Sections, install the following types:

1. Extension Pipe or Riser Clamps (MSS Type 8): For support of pipe risers NPS 3/4 to NPS 24 (DN 24 to DN 600).
2. Carbon- or Alloy-Steel Riser Clamps (MSS Type 42): For support of pipe risers NPS 3/4 to NPS 24 (DN 20 to DN 600) if longer ends are required for riser clamps.

K. Hanger-Rod Attachments: Unless otherwise indicated and except as specified in piping system Sections, install the following types:

1. Steel Turnbuckles (MSS Type 13): For adjustment up to 6 inches for heavy loads.
2. Steel Clevises (MSS Type 14): For 120 to 450 deg F piping installations.
3. Swivel Turnbuckles (MSS Type 15): For use with MSS Type 11, split pipe rings.
4. Malleable-Iron Sockets (MSS Type 16): For attaching hanger rods to various types of building attachments.
5. Steel Weldless Eye Nuts (MSS Type 17): For 120 to 450 deg F piping installations.

L. Building Attachments: Unless otherwise indicated and except as specified in piping system Sections, install the following types:

1. Steel or Malleable Concrete Inserts (MSS Type 18): For upper attachment to suspend pipe hangers from concrete ceiling.
2. Top-Beam C-Clamps (MSS Type 19): For use under roof installations with bar-joist construction, to attach to top flange of structural shape.
3. Side-Beam or Channel Clamps (MSS Type 20): For attaching to bottom flange of beams, channels, or angles.
4. Center-Beam Clamps (MSS Type 21): For attaching to center of bottom flange of beams.
5. Welded Beam Attachments (MSS Type 22): For attaching to bottom of beams if loads are considerable and rod sizes are large.
6. C-Clamps (MSS Type 23): For structural shapes.
7. Top-Beam Clamps (MSS Type 25): For top of beams if hanger rod is required tangent to flange edge.
8. Side-Beam Clamps (MSS Type 27): For bottom of steel I-beams.
9. Steel-Beam Clamps with Eye Nuts (MSS Type 28): For attaching to bottom of steel I-beams for heavy loads.
10. Linked-Steel Clamps with Eye Nuts (MSS Type 29): For attaching to bottom of steel I-beams for heavy loads, with link extensions.
11. Malleable-Beam Clamps with Extension Pieces (MSS Type 30): For attaching to structural steel.

12. Welded-Steel Brackets: For support of pipes from below or for suspending from above by using clip and rod. Use one of the following for indicated loads:
    a. Light (MSS Type 31): 750 lb (340 kg).
    b. Medium (MSS Type 32): 1500 lb (680 kg).
    c. Heavy (MSS Type 33): 3000 lb (1360 kg).
13. Side-Beam Brackets (MSS Type 34): For sides of steel or wooden beams.
14. Plate Lugs (MSS Type 57): For attaching to steel beams if flexibility at beam is required.
15. Horizontal Travelers (MSS Type 58): For supporting piping systems subject to linear horizontal movement where headroom is limited.

M. Saddles and Shields: Unless otherwise indicated and except as specified in piping system Sections, install the following types:

1. Steel-Pipe-Covering Protection Saddles (MSS Type 39): To fill interior voids with insulation that matches adjoining insulation.
2. Protection Shields (MSS Type 40): Of length recommended in writing by manufacturer to prevent crushing insulation.
3. Thermal-Hanger Shield Inserts: For supporting insulated pipe.

N. Spring Hangers and Supports: Unless otherwise indicated and except as specified in piping system Sections, install the following types:

1. Restraint-Control Devices (MSS Type 47): Where indicated to control piping movement.
2. Spring Cushions (MSS Type 48): For light loads if vertical movement does not exceed 1-1/4 inches.
3. Spring-Cushion Roll Hangers (MSS Type 49): For equipping Type 41, roll hanger with springs.
4. Spring Sway Braces (MSS Type 50): To retard sway, shock, vibration, or thermal expansion in piping systems.
5. Variable-Spring Hangers (MSS Type 51): Preset to indicated load and limit variability factor to 25 percent to allow expansion and contraction of piping system from hanger.
6. Variable-Spring Base Supports (MSS Type 52): Preset to indicated load and limit variability factor to 25 percent to allow expansion and contraction of piping system from base support.
7. Variable-Spring Trapeze Hangers (MSS Type 53): Preset to indicated load and limit variability factor to 25 percent to allow expansion and contraction of piping system from trapeze support.
8. Constant Supports: For critical piping stress and if necessary to avoid transfer of stress from one support to another support, critical terminal, or connected equipment. Include auxiliary stops for erection, hydrostatic test, and load-adjustment capability. These supports include the following types:
    a. Horizontal (MSS Type 54): Mounted horizontally.
    b. Vertical (MSS Type 55): Mounted vertically.
    c. Trapeze (MSS Type 56): Two vertical-type supports and one trapeze member.

O. Comply with MSS SP-69 for trapeze pipe-hanger selections and applications that are not specified in piping system Sections.

P. Comply with MFMA-103 for metal framing system selections and applications that are not specified in piping system Sections.

Q. Use powder-actuated fasteners or mechanical-expansion anchors instead of building attachments where required in concrete construction.

END OF SECTION 220529

SECTION 220553 - IDENTIFICATION FOR PLUMBING PIPING AND EQUIPMENT

PART 1 - GENERAL

1.1 SUMMARY

A. This Section includes the following mechanical identification materials and their installation:

1. Equipment nameplates
2. Equipment markers
3. Equipment signs
4. Access panel and door markers
5. Valve tags
6. Pipe Markers

1.2 SUBMITTALS

A. Product Data: For each type of product indicated.

1.3 QUALITY ASSURANCE

A. ASME Compliance: Comply with ASME A13.1, "Scheme for the Identification of Piping Systems," for letter size, length of color field, colors, and viewing angles of identification devices for piping.

PART 2 - PRODUCTS

2.1 EQUIPMENT IDENTIFICATION DEVICES

A. Equipment Nameplates: Metal, with data engraved or stamped, for permanent attachment on equipment.

1. Data:
   a. Manufacturer, product name, model number, and serial number.
   b. Capacity, operating and power characteristics, and essential data.
   c. Labels of tested compliances.
2. Location: Accessible and visible.
3. Fasteners: As required to mount on equipment.

B. Equipment Markers: Engraved, color-coded laminated plastic. Include contact-type, permanent adhesive.

1. Terminology: Match schedules as closely as possible.
2. Data:
   a. Name and plan number
   b. Equipment service
   c. Design capacity

d. Other design parameters such as pressure drop, entering and leaving conditions, and speed

3. Size: 2-1/2 by 4 inches for control devices, dampers, and valves; 4-1/2 by 6 inches for equipment.

C. Equipment Signs: ASTM D 709, Type I, cellulose, paper-base, phenolic-resin-laminate engraving stock; Grade ES-2, black surface, black phenolic core, with white melamine subcore, unless otherwise indicated. Fabricate in sizes required for message. Provide holes for mechanical fastening.

1. Data: Instructions for operation of equipment and for safety procedures.
2. Engraving: Manufacturer's standard letter style, of sizes and with terms to match equipment identification.
3. Thickness: 1/8 inch, unless otherwise indicated.
4. Fasteners: Self-tapping, stainless-steel screws or contact-type, permanent adhesive.

D. Access Panel and Door Markers: 1/16-inch thick, engraved laminated plastic, with abbreviated terms and numbers corresponding to identification. Provide 1/8-inch center hole for attachment.

1. Fasteners: Self-tapping, stainless-steel screws or contact-type, permanent adhesive.

2.2 PIPING IDENTIFICATION DEVICES

A. Manufactured Pipe Markers, General: Preprinted, color-coded, with lettering indicating service, and showing direction of flow.

1. Colors: Comply with ASME A13.1, unless otherwise indicated.
2. Pipes with OD, Including Insulation, Less Than 6 Inches: Full-band pipe markers extending 360 degrees around pipe at each location.
3. Pipes with OD, Including Insulation, 6 Inches and Larger: Either full-band or strip-type pipe markers at least three times letter height and of length required for label.
4. Arrows: Integral with piping system service lettering to accommodate both directions; or as separate unit on each pipe marker to indicate direction of flow.

B. Pre-tensioned Pipe Markers: Pre-coiled semi-rigid plastic formed to cover full circumference of pipe and to attach to pipe without adhesive.

C. Shaped Pipe Markers: Preformed semi-rigid plastic formed to partially cover circumference of pipe and to attach to pipe with mechanical fasteners that do not penetrate insulation vapor barrier.

D. Self-Adhesive Pipe Markers: Plastic with pressure-sensitive, permanent-type, self-adhesive back.

E. Plastic Tape: Continuously printed, vinyl tape at least 3 mils thick with pressure-sensitive, permanent-type, self-adhesive back.

1. Width for Markers on Pipes with OD, Including Insulation, Less Than 6 Inches: 3/4 inch minimum.
2. Width for Markers on Pipes with OD, Including Insulation, 6 Inches or Larger: 1-1/2 inches minimum.

2.3 VALVE TAGS

A. Valve Tags: Stamped or engraved with 1/4-inch letters for piping system abbreviation and 1/2-inch numbers, with numbering scheme. Provide 5/32-inch hole for fastener.

1. Material: 0.032 inch-thick brass/aluminum
2. Valve-Tag Fasteners: Brass wire-link or beaded chain; or S-hook

PART 3 - EXECUTION

3.1 APPLICATIONS, GENERAL

A. Products specified are for applications referenced in other Division 22 Sections. If more than single-type material, device, or label is specified for listed applications, selection is Installer's option.

3.2 EQUIPMENT IDENTIFICATION

A. Install and permanently fasten equipment nameplates on each major item of mechanical equipment that does not have nameplate or has nameplate that is damaged or located where not easily visible. Locate nameplates where accessible and visible. Include nameplates for the following general categories of equipment:

1. Fuel-burning units, including boilers, furnaces, heaters
2. Pumps and similar motor-driven units.
3. Fans.

B. Install equipment markers with permanent adhesive on or near each major item of mechanical equipment. Data required for markers may be included on signs, and markers may be omitted if both are indicated.

1. Letter Size: Minimum 1/4 inch for name of units if viewing distance is less than 24 inches, 1/2 inch for viewing distances up to 72 inches, and proportionately larger lettering for greater viewing distances. Include secondary lettering two-thirds to three-fourths the size of principal lettering.
2. Data: Distinguish among multiple units, indicate operational requirements, indicate safety and emergency precautions, warn of hazards and improper operations, and identify units.
3. Locate markers where accessible and visible.
   a. Main control and operating valves, including safety devices and hazardous units such as gas outlets.
   b. Meters, gages, thermometers, and similar units.
   c. Fuel-burning units, including boilers, furnaces, heaters.
   d. Pumps and similar motor-driven units.
   e. Fans.

C. Install equipment signs with screws or permanent adhesive on or near each major item of mechanical equipment. Locate signs where accessible and visible.

1. Letter Size: Minimum 1/4 inch for name of units if viewing distance is less than 24 inches, 1/2 inch for viewing distances up to 72 inches, and proportionately larger lettering

for greater viewing distances. Include secondary lettering two-thirds to three-fourths the size of principal lettering.

2. Data: Distinguish among multiple units, indicate operational requirements, indicate safety and emergency precautions, warn of hazards and improper operations, and identify units.

D. Install access panel markers with screws on equipment access panels.

3.3 PIPING IDENTIFICATION

A. Install manufactured pipe markers indicating service on each piping system. Install with flow indication arrows showing direction of flow.

1. Pipes with OD, Including Insulation, Less Than 6 Inches: Pre-tensioned pipe markers. Use size to ensure a tight fit.
2. Pipes with OD, Including Insulation, Less Than 6 Inches: Self-adhesive pipe markers. Use color-coded, self-adhesive plastic tape, at least 3/4 inch wide, lapped at least 1-1/2 inches at both ends of pipe marker, and covering full circumference of pipe.
3. Pipes with OD, Including Insulation, 6 Inches and Larger: Shaped pipe markers. Use size to match pipe and secure with fasteners.
4. Pipes with OD, Including Insulation, 6 Inches and Larger: Self-adhesive pipe markers. Use color-coded, self-adhesive plastic tape, at least 1-1/2 inches wide, lapped at least 3 inches at both ends of pipe marker, and covering full circumference of pipe.

B. Locate pipe markers and color bands where piping is exposed in finished spaces; machine rooms; accessible maintenance spaces such as shafts, tunnels, and plenums; and exterior non-concealed locations as follows:

1. Near each valve and control device.
2. Near each branch connection, excluding short takeoffs for fixtures and terminal units. Where flow pattern is not obvious, mark each pipe at branch.
3. Near penetrations through walls, floors, ceilings, and non-accessible enclosures.
4. At access doors, manholes, and similar access points that permit view of concealed piping.
5. Near major equipment items and other points of origination and termination.
6. Spaced at maximum intervals of 50 feet along each run. Reduce intervals to 25 feet in areas of congested piping and equipment.
7. On piping above removable acoustical ceilings, omit intermediately spaced markers.

3.4 VALVE-TAG INSTALLATION

A. Install tags on valves and control devices in piping systems, except check valves; valves within factory-fabricated equipment units; plumbing fixture supply stops; shutoff valves; faucets; convenience and lawn-watering hose connections; and similar roughing-in connections of end-use fixtures and units. List tagged valves in a valve schedule.

B. Valve-Tag Application Schedule: Tag valves according to size, shape, and color scheme and with captions similar to those indicated in the following:

1. Valve-Tag Size and Shape:
   a. Domestic Water: 1-1/2 inches, round/square
   b. Gas: 1-1/2 inches, round/square

3.5 ADJUSTING AND CLEANING

A. Relocate mechanical identification materials and devices that have become visually blocked by other work.

B. Clean faces of mechanical identification devices.

END OF SECTION 220553

SECTION 220719 - PLUMBING PIPING INSULATION

PART 1 - GENERAL

1.1 RELATED DOCUMENTS

A. Drawings and general provisions of the Contract, including General and Supplementary Conditions and Division 1 Specification Sections, apply to this Section.

1.2 SUMMARY

A. This Section includes mechanical insulation for duct, equipment, and pipe, including the following:

1. Insulation Materials:
   a. Cellular glass.
   b. Mineral fiber.
2. Adhesives.
3. Mastics.
4. Lagging adhesives.
5. Sealants.
6. Field-applied jackets.
7. Tapes.
8. Securements.
9. Corner angles.

1.3 DEFINITIONS

A. ASJ: All-service jacket.

B. FSK: Foil, scrim, kraft paper.

C. FSP: Foil, scrim, polyethylene.

D. PVDC: Polyvinylidene chloride.

E. SSL: Self-sealing lap.

1.4 SUBMITTALS

A. Product Data: For each type of product indicated, identify thermal conductivity, thickness, and jackets (both factory and field applied, if any).

B. Shop Drawings: Show details for the following:

1. Application of protective shields, saddles, and inserts at hangers for each type of insulation and hanger.
2. Attachment and covering of heat tracing inside insulation.

3. Insulation application at pipe expansion joints for each type of insulation.
4. Insulation application at elbows, fittings, flanges, valves, and specialties for each type of insulation.
5. Removable insulation at piping specialties, equipment connections, and access panels.
6. Application of field-applied jackets.
7. Application at linkages of control devices.
8. Field application for each equipment type.

C. Samples: For each type of insulation and jacket indicated. Identify each Sample, describing product and intended use. Sample sizes are as follows:

1. Preformed Pipe Insulation Materials: 12 inches long by NPS 2 (DN 50).
2. Sheet Form Insulation Materials: 12 inches square.
3. Jacket Materials for Pipe: 12 inches long by NPS 2 (DN 50).
4. Sheet Jacket Materials: 12 inches square.
5. Manufacturer's Color Charts: For products where color is specified, show the full range of colors available for each type of finish material.

D. Installer Certificates: Signed by Contractor certifying that installers comply with requirements.

E. Material Test Reports: From a qualified testing agency acceptable to authorities having jurisdiction indicating, interpreting, and certifying test results for compliance of insulation materials, sealers, attachments, cements, and jackets, with requirements indicated. Include dates of tests and test methods employed.

F. Field quality-control inspection reports.

1.5 QUALITY ASSURANCE

A. Installer Qualifications: Skilled mechanics who have successfully completed an apprenticeship program or another craft training program certified by the Department of Labor, Bureau of Apprenticeship and Training.

B. Fire-Test-Response Characteristics: Insulation and related materials shall have fire-test-response characteristics indicated, as determined by testing identical products per ASTM E 84, by a testing and inspecting agency acceptable to authorities having jurisdiction. Factory label insulation and jacket materials and adhesive, mastic, and cement material containers, with appropriate markings of applicable testing and inspecting agency.

1. Insulation Installed Indoors: Flame-spread index of 25 or less, and smoke-developed index of 50 or less.
2. Insulation Installed Outdoors: Flame-spread index of 75 or less, and smoke-developed index of 150 or less.

1.6 DELIVERY, STORAGE, AND HANDLING

A. Packaging: Insulation material containers shall be marked by manufacturer with appropriate ASTM standard designation, type and grade, and maximum use temperature.

1.7 COORDINATION

A. Coordinate size and location of supports, hangers, and insulation shields specified in Division 22 Section "Hangers and Supports."

B. Coordinate clearance requirements with piping Installer for piping insulation application, duct Installer for duct insulation application, and equipment Installer for equipment insulation application. Before preparing piping and ductwork Shop Drawings, establish and maintain clearance requirements for installation of insulation and field-applied jackets and finishes and for space required for maintenance.

C. Coordinate installation and testing of heat tracing.

1.8 SCHEDULING

A. Schedule insulation application after pressure testing systems and, where required, after installing and testing heat tracing. Insulation application may begin on segments that have satisfactory test results.

B. Complete installation and concealment of plastic materials as rapidly as possible in each area of construction.

PART 2 - PRODUCTS

2.1 MANUFACTURERS

A. In other Part 2 articles where titles below introduce lists, the following requirements apply to product selection:

1. Available Products: Subject to compliance with requirements, products that may be incorporated into the Work include, but are not limited to, products specified.
2. Available Manufacturers: Subject to compliance with requirements, manufacturers offering products that may be incorporated into the Work include, but are not limited to, manufacturers specified.
3. Manufacturers: Subject to compliance with requirements, provide products by one of the manufacturers specified.

2.2 INSULATION MATERIALS

A. Refer to Part 3 schedule articles for requirements about where insulating materials shall be applied.

B. Products shall not contain asbestos, lead, mercury, or mercury compounds.

C. Products that come in contact with stainless steel shall have a leachable chloride content of less than 50 ppm when tested according to ASTM C 871.

D. Insulation materials for use on austenitic stainless steel shall be qualified as acceptable according to ASTM C 795.

E. Foam insulation materials shall not use CFC or HCFC blowing agents in the manufacturing process.

F. Cellular Glass: Inorganic, incombustible, foamed or cellulated glass with annealed, rigid, hermetically sealed cells. Factory-applied jacket requirements are specified in Part 2 "Factory-Applied Jackets" Article.

1. Products:
   a. Cell-U-Foam Corporation; Ultra-CUF.
   b. Pittsburgh Corning Corporation; Foamglas Super K.
   c. Or Approved Equal.

2. Block Insulation: ASTM C 552, Type I.
3. Special-Shaped Insulation: ASTM C 552, Type III.
4. Board Insulation: ASTM C 552, Type IV.
5. Preformed Pipe Insulation without Jacket: Comply with ASTM C 552, Type II, Class 1.
6. Preformed Pipe Insulation with Factory-Applied [ASJ] [ASJ-SSL]: Comply with ASTM C 552, Type II, Class 2.
7. Factory fabricate shapes according to ASTM C 450 and ASTM C 585.

G. Mineral-Fiber, Preformed Pipe Insulation:

1. Products:
   a. Fibrex Insulations Inc.; Coreplus 1200.
   b. Johns Manville; Micro-Lok.
   c. Knauf Insulation; 1000° Pipe Insulation.
   d. Manson Insulation Inc.; Alley-K.
   e. Owens Corning; Fiberglas Pipe Insulation.
   f. Or Approved Equal.

2. Type I, 850 deg F Materials: Mineral or glass fibers bonded with a thermosetting resin. Comply with ASTM C 547, Type I, Grade A, with factory-applied ASJ. Factory-applied jacket requirements are specified in Part 2 "Factory-Applied Jackets" Article.

H. Mineral-Fiber, Pipe Insulation Wicking System: Preformed pipe insulation complying with ASTM C 547, Type I, Grade A, with absorbent cloth factory applied to the entire inside surface of preformed pipe insulation and extended through the longitudinal joint to outside surface of insulation under insulation jacket. Factory apply a white, polymer, vapor-retarder jacket with self-sealing adhesive tape seam and evaporation holes running continuously along the longitudinal seam, exposing the absorbent cloth.

1. Products:
   a. Knauf Insulation; Permawick Pipe Insulation.
   b. Owens Corning; VaporWick Pipe Insulation.
   c. Or Approved Equal.

I. Mineral-Fiber, Pipe and Tank Insulation: Mineral or glass fibers bonded with a thermosetting resin. Semirigid board material with factory-applied [ASJ] [FSK jacket] complying with ASTM C 1393, Type II or Type IIIA Category 2, or with properties similar to ASTM C 612, Type IB. Nominal density is 2.5 lb/cu. ft. or more. Thermal conductivity (k-value) at 100 deg F is 0.29 Btu x in./h x sq. ft. x deg F (0.042 W/m x K) or less. Factory-applied jacket requirements are specified in Part 2 "Factory-Applied Jackets" Article.

1. Products:
    a. CertainTeed Corp.; CrimpWrap.
    b. Johns Manville; MicroFlex.
    c. Knauf Insulation; Pipe and Tank Insulation.
    d. Manson Insulation Inc.; AK Flex.
    e. Owens Corning; Fiberglas Pipe and Tank Insulation.
    f. Or Approved Equal.

2.3 ADHESIVES

A. Materials shall be compatible with insulation materials, jackets, and substrates and for bonding insulation to itself and to surfaces to be insulated, unless otherwise indicated.

B. Calcium Silicate Adhesive: Fibrous, sodium-silicate-based adhesive with a service temperature range of 50 to 800 deg F.

1. Products:
    a. Childers Products, Division of ITW; CP-97.
    b. Foster Products Corporation, H. B. Fuller Company; 81-27/81-93.
    c. Marathon Industries, Inc.; 290.
    d. Mon-Eco Industries, Inc.; 22-30.
    e. Vimasco Corporation; 760.
    f. Or Approved Equal.

C. Cellular-Glass, Phenolic-Foam, Polyisocyanurate, and Polystyrene Adhesive: Solvent-based resin adhesive, with a service temperature range of minus 75 to plus 300 deg F.

1. Products:
    a. Childers Products, Division of ITW; CP-96.
    b. Foster Products Corporation, H. B. Fuller Company; 81-33.
    c. Or Approved Equal.

D. Flexible Elastomeric and Polyolefin Adhesive: Comply with MIL-A-24179A, Type II, Class I.

1. Products:
    a. Aeroflex USA Inc.; Aeroseal.
    b. Armacell LCC; 520 Adhesive.
    c. Foster Products Corporation, H. B. Fuller Company; 85-75.
    d. RBX Corporation; Rubatex Contact Adhesive.
    e. Or Approved Equal.

E. Mineral-Fiber Adhesive: Comply with MIL-A-3316C, Class 2, Grade A.

1. Products:
    a. Childers Products, Division of ITW; CP-82.
    b. Foster Products Corporation, H. B. Fuller Company; 85-20.
    c. ITW TACC, Division of Illinois Tool Works; S-90/80.
    d. Marathon Industries, Inc.; 225.
    e. Mon-Eco Industries, Inc.; 22-25.
    f. Or Approved Equal.

F. Polystyrene Adhesive: Solvent- or water-based, synthetic resin adhesive with a service temperature range of minus 20 to plus 140 deg F.

1. Products:
   a. Childers Products, Division of ITW; CP-96.
   b. Foster Products Corporation, H. B. Fuller Company; 97-13.
   c. Or Approved Equal.

G. ASJ Adhesive, and FSK and PVDC Jacket Adhesive: Comply with MIL-A-3316C, Class 2, Grade A for bonding insulation jacket lap seams and joints.

1. Products:
   a. Childers Products, Division of ITW; CP-82.
   b. Foster Products Corporation, H. B. Fuller Company; 85-20.
   c. ITW TACC, Division of Illinois Tool Works; S-90/80.
   d. Marathon Industries, Inc.; 225.
   e. Mon-Eco Industries, Inc.; 22-25.
   f. Or Approved Equal.

H. PVC Jacket Adhesive: Compatible with PVC jacket.

1. Products:
   a. Dow Chemical Company (The); 739, Dow Silicone.
   b. Johns-Manville; Zeston Perma-Weld, CEEL-TITE Solvent Welding Adhesive.
   c. P.I.C. Plastics, Inc.; Welding Adhesive.
   d. Red Devil, Inc.; Celulon Ultra Clear.
   e. Speedline Corporation; Speedline Vinyl Adhesive.
   f. Or Approved Equal.

2.4 MASTICS

A. Materials shall be compatible with insulation materials, jackets, and substrates; comply with MIL-C-19565C, Type II.

B. Vapor-Barrier Mastic: Water based; suitable for indoor and outdoor use on below ambient services.

1. Products:
   a. Childers Products, Division of ITW; CP-35.
   b. Foster Products Corporation, H. B. Fuller Company; 30-90.
   c. ITW TACC, Division of Illinois Tool Works; CB-50.
   d. Marathon Industries, Inc.; 590.
   e. Mon-Eco Industries, Inc.; 55-40.
   f. Vimasco Corporation; 749.
   g. Or Approved Equal.

2. Water-Vapor Permeance: ASTM E 96, Procedure B, 0.013 perm at 43-mil dry film thickness.
3. Service Temperature Range: Minus 20 to plus 180 deg F.
4. Solids Content: ASTM D 1644, 59 percent by volume and 71 percent by weight.
5. Color: White.

C. Vapor-Barrier Mastic: Solvent based; suitable for indoor use on below ambient services.

1. Products:
   a. Childers Products, Division of ITW; CP-30.
   b. Foster Products Corporation, H. B. Fuller Company; 30-35.
   c. ITW TACC, Division of Illinois Tool Works; CB-25.
   d. Marathon Industries, Inc.; 501.
   e. Mon-Eco Industries, Inc.; 55-10.
   f. Or Approved Equal.

2. Water-Vapor Permeance: ASTM F 1249, 0.05 perm at 35-mil dry film thickness.
3. Service Temperature Range: 0 to 180 deg F
4. Solids Content: ASTM D 1644, 44 percent by volume and 62 percent by weight.
5. Color: White.

D. Vapor-Barrier Mastic: Solvent based; suitable for outdoor use on below ambient services.

1. Products:
   a. Childers Products, Division of ITW; Encacel.
   b. Foster Products Corporation, H. B. Fuller Company; 60-95/60-96.
   c. Marathon Industries, Inc.; 570.
   d. Mon-Eco Industries, Inc.; 55-70.
   e. Or Approved Equal.

2. Water-Vapor Permeance: ASTM F 1249, 0.05 perm at 30-mil dry film thickness.
3. Service Temperature Range: Minus 50 to plus 220 deg F
4. Solids Content: ASTM D 1644, 33 percent by volume and 46 percent by weight.
5. Color: White.

E. Breather Mastic: Water based; suitable for indoor and outdoor use on above ambient services.

1. Products:
   a. Childers Products, Division of ITW; CP-10.
   b. Foster Products Corporation, H. B. Fuller Company; 35-00.
   c. ITW TACC, Division of Illinois Tool Works; CB-05/15.
   d. Marathon Industries, Inc.; 550.
   e. Mon-Eco Industries, Inc.; 55-50.
   f. Vimasco Corporation; WC-1/WC-5.
   g. Or Approved Equal.

2. Water-Vapor Permeance: ASTM F 1249, 3 perms at 0.0625-inch dry film thickness.
3. Service Temperature Range: Minus 20 to plus 200 deg F.
4. Solids Content: 63 percent by volume and 73 percent by weight.
5. Color: White.

2.5 LAGGING ADHESIVES

A. Description: Comply with MIL-A-3316C Class I, Grade A and shall be compatible with insulation materials, jackets, and substrates.

1. Products:
   a. Childers Products, Division of ITW; CP-52.
   b. Foster Products Corporation, H. B. Fuller Company; 81-42.

c. Marathon Industries, Inc.; 130.
d. Mon-Eco Industries, Inc.; 11-30.
e. Vimasco Corporation; 136.
f. Or Approved Equal.

2. Fire-resistant, water-based lagging adhesive and coating for use indoors to adhere fire-resistant lagging cloths over duct, equipment, and pipe insulation.
3. Service Temperature Range: Minus 50 to plus 180 deg F.
4. Color: White.

2.6 SEALANTS

A. Joint Sealants:

1. Joint Sealants for Cellular-Glass, Phenolic-Foam, and Polyisocyanurate Products:
   a. Childers Products, Division of ITW; CP-76.
   b. Foster Products Corporation, H. B. Fuller Company; 30-45.
   c. Marathon Industries, Inc.; 405.
   d. Mon-Eco Industries, Inc.; 44-05.
   e. Pittsburgh Corning Corporation; Pittseal 444.
   f. Vimasco Corporation; 750.
   g. Or Approved Equal.

2. Joint Sealants for Polystyrene Products:
   a. Childers Products, Division of ITW; CP-70.
   b. Foster Products Corporation, H. B. Fuller Company; 30-45/30-46.
   c. Marathon Industries, Inc.; 405.
   d. Mon-Eco Industries, Inc.; 44-05.
   e. Vimasco Corporation; 750.
   f. Or Approved Equal.

3. Materials shall be compatible with insulation materials, jackets, and substrates.
4. Permanently flexible, elastomeric sealant.
5. Service Temperature Range: Minus 100 to plus 300 deg F.
6. Color: White or gray.

B. FSK and Metal Jacket Flashing Sealants:

1. Products:
   a. Childers Products, Division of ITW; CP-76-8.
   b. Foster Products Corporation, H. B. Fuller Company; 95-44.
   c. Marathon Industries, Inc.; 405.
   d. Mon-Eco Industries, Inc.; 44-05.
   e. Vimasco Corporation; 750.
   f. Or Approved Equal.

2. Materials shall be compatible with insulation materials, jackets, and substrates.
3. Fire- and water-resistant, flexible, elastomeric sealant.
4. Service Temperature Range: Minus 40 to plus 250 deg F.
5. Color: Aluminum.

C. ASJ Flashing Sealants, and Vinyl, PVDC, and PVC Jacket Flashing Sealants:

1. Products:
   a. Childers Products, Division of ITW; CP-76.
   b. Or Approved Equal

2. Materials shall be compatible with insulation materials, jackets, and substrates.
3. Fire- and water-resistant, flexible, elastomeric sealant.
4. Service Temperature Range: Minus 40 to plus 250 deg F.
5. Color: White.

2.7 FIELD-APPLIED JACKETS

A. Field-applied jackets shall comply with ASTM C 921, Type I, unless otherwise indicated.

B. FSK Jacket: Aluminum-foil-face, fiberglass-reinforced scrim with kraft-paper backing.

C. PVC Jacket: High-impact-resistant, UV-resistant PVC complying with ASTM D 1784, Class 16354-C; thickness as scheduled; roll stock ready for shop or field cutting and forming. Thickness is indicated in field-applied jacket schedules.

1. Products:
   a. Johns Manville; Zeston.
   b. P.I.C. Plastics, Inc.; FG Series.
   c. Proto PVC Corporation; LoSmoke.
   d. Speedline Corporation; SmokeSafe.
   e. Or Approved Equal.

2. Adhesive: As recommended by jacket material manufacturer.
3. Color: White.
4. Factory-fabricated fitting covers to match jacket if available; otherwise, field fabricate.
   a. Shapes: 45- and 90-degree, short- and long-radius elbows, tees, valves, flanges, unions, reducers, end caps, soil-pipe hubs, traps, mechanical joints, and P-trap and supply covers for lavatories.
5. Factory-fabricated tank heads and tank side panels.

D. Metal Jacket:

1. Products:
   a. Childers Products, Division of ITW; Metal Jacketing Systems.
   b. PABCO Metals Corporation; Surefit.
   c. RPR Products, Inc.; Insul-Mate.
   d. Or Approved Equal.

E. PVDC-SSL Jacket: PVDC jacket with a self-sealing, pressure-sensitive, acrylic-based adhesive covered by a removable protective strip.

2.8 TAPES

A. ASJ Tape: White vapor-retarder tape matching factory-applied jacket with acrylic adhesive, complying with ASTM C 1136 and UL listed.

1. Products:

a. Avery Dennison Corporation, Specialty Tapes Division; Fasson 0835.
b. Compac Corp.; 104 and 105.
c. Ideal Tape Co., Inc., an American Biltrite Company; 428 AWF ASJ.
d. Venture Tape; 1540 CW Plus, 1542 CW Plus, and 1542 CW Plus/SQ.
e. Or Approved Equal.

2. Width: 3 inches
3. Thickness: 11.5 mils
4. Adhesion: 90 ounces force/inch in width.
5. Elongation: 2 percent.
6. Tensile Strength: 40 lbf/inch in width.
7. ASJ Tape Disks and Squares: Precut disks or squares of ASJ tape.

B. FSK Tape: Foil-face, vapor-retarder tape matching factory-applied jacket with acrylic adhesive; complying with ASTM C 1136 and UL listed.

1. Products:
a. Avery Dennison Corporation, Specialty Tapes Division; Fasson 0827.
b. Compac Corp.; 110 and 111.
c. Ideal Tape Co., Inc., an American Biltrite Company; 491 AWF FSK.
d. Venture Tape; 1525 CW, 1528 CW, and 1528 CW/SQ.
e. Or Approved Equal.

2. Width: 3 inches.
3. Thickness: 6.5 mils.
4. Adhesion: 90 ounces force/inch in width.
5. Elongation: 2 percent.
6. Tensile Strength: 40 lbf/inch in width.
7. FSK Tape Disks and Squares: Precut disks or squares of FSK tape.

C. PVC Tape: White vapor-retarder tape matching field-applied PVC jacket with acrylic adhesive. Suitable for indoor and outdoor applications.

1. Products:
a. Avery Dennison Corporation, Specialty Tapes Division; Fasson 0555.
b. Compac Corp.; 130.
c. Ideal Tape Co., Inc., an American Biltrite Company; 370 White PVC tape.
d. Venture Tape; 1506 CW NS.
e. Or Approved Equal.

2. Width: 2 inches.
3. Thickness: 6 mils.
4. Adhesion: 64 ounces force/inch in width.
5. Elongation: 500 percent.
6. Tensile Strength: 18 lbf/inch in width.

D. Aluminum-Foil Tape: Vapor-retarder tape with acrylic adhesive and UL listed.

1. Products:
a. Avery Dennison Corporation, Specialty Tapes Division; Fasson 0800.
b. Compac Corp.; 120.
c. Ideal Tape Co., Inc., an American Biltrite Company; 488 AWF.
d. Venture Tape; 3520 CW.
e. Or Approved Equal.

2. Width: 2 inches.
3. Thickness: 3.7 mils.
4. Adhesion: 100 ounces force/inch in width.
5. Elongation: 5 percent.
6. Tensile Strength: 34 lbf/inch in width.

2.9 SECUREMENTS

A. Bands:

1. Products:
   a. Childers Products; Bands.
   b. PABCO Metals Corporation; Bands.
   c. RPR Products, Inc.; Bands.
   d. Or Approved Equal.

2. Stainless Steel: ASTM A 167 or ASTM A 240/A 240M, Type 304; 0.015 inch thick, 3/4 inch wide with wing or closed seal.
3. Aluminum: ASTM B 209 (ASTM B 209M), Alloy 3003, 3005, 3105, or 5005; Temper H-14, 0.020 inch thick, 1/2 inch wide with wing or closed seal.
4. Springs: Twin spring set constructed of stainless steel with ends flat and slotted to accept metal bands. Spring size determined by manufacturer for application.

B. Insulation Pins and Hangers:

1. Capacitor-Discharge-Weld Pins: Copper- or zinc-coated steel pin, fully annealed for capacitor-discharge welding, 0.135-inch diameter shank, length to suit depth of insulation indicated.
   a. Products:
      1) AGM Industries, Inc.; CWP-1.
      2) GEMCO; CD.
      3) Midwest Fasteners, Inc.; CD.
      4) Nelson Stud Welding; TPA, TPC, and TPS.
      5) Or Approved Equal.

2. Cupped-Head, Capacitor-Discharge-Weld Pins: Copper- or zinc-coated steel pin, fully annealed for capacitor-discharge welding, 0.135-inch diameter shank, length to suit depth of insulation indicated with integral 1-1/2-inch galvanized carbon-steel washer.
   a. Products:
      1) AGM Industries, Inc.; CWP-1.
      2) GEMCO; Cupped Head Weld Pin.
      3) Midwest Fasteners, Inc.; Cupped Head.
      4) Nelson Stud Welding; CHP.
      5) Or Approved Equal.

3. Metal, Adhesively Attached, Perforated-Base Insulation Hangers: Baseplate welded to projecting spindle that is capable of holding insulation, of thickness indicated, securely in position indicated when self-locking washer is in place. Comply with the following requirements:
   a. Products:
      1) AGM Industries, Inc.; Tactoo Insul-Hangers, Series T.
      2) GEMCO; Perforated Base.

3) Midwest Fasteners, Inc.; Spindle.
4) Or Approved Equal.

b. Baseplate: Perforated, galvanized carbon-steel sheet, 0.030 inch thick by 2 inches square.
c. Spindle: Aluminum, fully annealed, 0.106-inch diameter shank, length to suit depth of insulation indicated.
d. Adhesive: Recommended by hanger manufacturer. Product with demonstrated capability to bond insulation hanger securely to substrates indicated without damaging insulation, hangers, and substrates.

4. Insulation-Retaining Washers: Self-locking washers formed from 0.016-inch thick, aluminum sheet, with beveled edge sized as required to hold insulation securely in place but not less than 1-1/2 inches in diameter.
a. Products:
1) AGM Industries, Inc.; RC-150.
2) GEMCO; R-150.
3) Midwest Fasteners, Inc.; WA-150.
4) Nelson Stud Welding; Speed Clips.
5) Or Approved Equal.

b. Protect ends with capped self-locking washers incorporating a spring steel insert to ensure permanent retention of cap in exposed locations.

C. Staples: Outward-clinching insulation staples, nominal 3/4-inch wide, stainless steel or Monel.

D. Wire: 0.062-inch soft-annealed, galvanized steel.

1. Manufacturers:
a. ACS Industries, Inc.
b. C & F Wire.
c. Childers Products.
d. PABCO Metals Corporation.
e. RPR Products, Inc.
f. Or Approved Equal.

2.10 CORNER ANGLES

A. PVC Corner Angles: 30 mils thick, minimum 1 by 1 inch, PVC according to ASTM D 1784, Class 16354-C. White or color-coded to match adjacent surface.

B. Aluminum Corner Angles: 0.040 inch thick, minimum 1 by 1 inch, aluminum according to ASTM B 209 (ASTM B 209M), Alloy 3003, 3005, 3105 or 5005; Temper H-14.

C. Stainless-Steel Corner Angles: 0.024 inch thick, minimum 1 by 1 inch, stainless steel according to ASTM A 167 or ASTM A 240/A 240M, Type 304 or 316.

PART 3 - EXECUTION

3.1 EXAMINATION

A. Examine substrates and conditions for compliance with requirements for installation and other conditions affecting performance of insulation application.

1. Verify that systems and equipment to be insulated have been tested and are free of defects.
2. Verify that surfaces to be insulated are clean and dry.
3. Proceed with installation only after unsatisfactory conditions have been corrected.

3.2 PREPARATION

A. Surface Preparation: Clean and dry surfaces to receive insulation. Remove materials that will adversely affect insulation application.

B. Surface Preparation: Clean and prepare surfaces to be insulated. Before insulating, apply a corrosion coating to insulated surfaces as follows:

1. Stainless Steel: Coat 300 series stainless steel with epoxy primer 5 mils thick and epoxy finish 5 mils thick if operating in a temperature range between 140 and 300 deg F. Consult coating manufacturer for appropriate coating materials and application methods for operating temperature range.
2. Carbon Steel: Coat carbon steel operating at a service temperature between 32 and 300 deg F with an epoxy coating. Consult coating manufacturer for appropriate coating materials and application methods for operating temperature range.

C. Coordinate insulation installation with the trade installing heat tracing. Comply with requirements for heat tracing that apply to insulation.

D. Mix insulating cements with clean potable water; if insulating cements are to be in contact with stainless-steel surfaces, use demineralized water.

3.3 COMMON INSTALLATION REQUIREMENTS

A. Install insulation materials, accessories, and finishes with smooth, straight, and even surfaces; free of voids throughout the length of equipment, ducts and fittings, and piping including fittings, valves, and specialties.

B. Install insulation materials, forms, vapor barriers or retarders, jackets, and thicknesses required for each item of equipment, duct system, and pipe system as specified in insulation system schedules.

C. Install accessories compatible with insulation materials and suitable for the service. Install accessories that do not corrode, soften, or otherwise attack insulation or jacket in either wet or dry state.

D. Install insulation with longitudinal seams at top and bottom of horizontal runs.

E. Install multiple layers of insulation with longitudinal and end seams staggered.

F. Do not weld brackets, clips, or other attachment devices to piping, fittings, and specialties.

G. Keep insulation materials dry during application and finishing.

H. Install insulation with tight longitudinal seams and end joints. Bond seams and joints with adhesive recommended by insulation material manufacturer.

I. Install insulation with least number of joints practical.

J. Where vapor barrier is indicated, seal joints, seams, and penetrations in insulation at hangers, supports, anchors, and other projections with vapor-barrier mastic.

1. Install insulation continuously through hangers and around anchor attachments.
2. For insulation application where vapor barriers are indicated, extend insulation on anchor legs from point of attachment to supported item to point of attachment to structure. Taper and seal ends at attachment to structure with vapor-barrier mastic.
3. Install insert materials and install insulation to tightly join the insert. Seal insulation to insulation inserts with adhesive or sealing compound recommended by insulation material manufacturer.
4. Cover inserts with jacket material matching adjacent pipe insulation. Install shields over jacket, arranged to protect jacket from tear or puncture by hanger, support, and shield.

K. Apply adhesives, mastics, and sealants at manufacturer's recommended coverage rate and wet and dry film thicknesses.

L. Install insulation with factory-applied jackets as follows:

1. Draw jacket tight and smooth.
2. Cover circumferential joints with 3-inch wide strips, of same material as insulation jacket. Secure strips with adhesive and outward clinching staples along both edges of strip, spaced 4 inches o.c.
3. Overlap jacket longitudinal seams at least 1-1/2 inches. Install insulation with longitudinal seams at bottom of pipe. Clean and dry surface to receive self-sealing lap. Staple laps with outward clinching staples along edge at 2 inches or 4 inches o.c.
   a. For below ambient services, apply vapor-barrier mastic over staples.
4. Cover joints and seams with tape as recommended by insulation material manufacturer to maintain vapor seal.
5. Where vapor barriers are indicated, apply vapor-barrier mastic on seams and joints and at ends adjacent to duct and pipe flanges and fittings.

M. Cut insulation in a manner to avoid compressing insulation more than 75 percent of its nominal thickness.

N. Finish installation with systems at operating conditions. Repair joint separations and cracking due to thermal movement.

O. Repair damaged insulation facings by applying same facing material over damaged areas. Extend patches at least 4 inches beyond damaged areas. Adhere, staple, and seal patches similar to butt joints.

P. For above ambient services, do not install insulation to the following:

1. Vibration-control devices.
2. Testing agency labels and stamps.
3. Nameplates and data plates.
4. Manholes.
5. Handholes.
6. Cleanouts.

3.4 PENETRATIONS

A. Insulation Installation at Roof Penetrations: Install insulation continuously through roof penetrations.

1. Seal penetrations with flashing sealant.
2. For applications requiring only indoor insulation, terminate insulation above roof surface and seal with joint sealant. For applications requiring indoor and outdoor insulation, install insulation for outdoor applications tightly joined to indoor insulation ends. Seal joint with joint sealant.
3. Extend jacket of outdoor insulation outside roof flashing at least 2 inches below top of roof flashing.
4. Seal jacket to roof flashing with flashing sealant.

B. Insulation Installation at Below-Grade Exterior Wall Penetrations: Terminate insulation flush with sleeve seal. Seal terminations with flashing sealant.

C. Insulation Installation at Aboveground Exterior Wall Penetrations: Install insulation continuously through wall penetrations.

1. Seal penetrations with flashing sealant.
2. For applications requiring only indoor insulation, terminate insulation inside wall surface and seal with joint sealant. For applications requiring indoor and outdoor insulation, install insulation for outdoor applications tightly joined to indoor insulation ends. Seal joint with joint sealant.
3. Extend jacket of outdoor insulation outside wall flashing and overlap wall flashing at least 2 inches.
4. Seal jacket to wall flashing with flashing sealant.

D. Insulation Installation at Interior Wall and Partition Penetrations (That Are Not Fire Rated): Install insulation continuously through walls and partitions.

E. Insulation Installation at Fire-Rated Wall and Partition Penetrations: Install insulation continuously through penetrations of fire-rated walls and partitions. Terminate insulation at fire damper sleeves for fire-rated wall and partition penetrations. Externally insulate damper sleeves to match adjacent insulation and overlap duct insulation at least 2 inches.

1. Firestopping and fire-resistive joint sealers are specified in Division 7 Section.

F. Insulation Installation at Floor Penetrations:

1. Duct: Install insulation continuously through floor penetrations that are not fire rated. For penetrations through fire-rated assemblies, terminate insulation at fire damper sleeves and externally insulate damper sleeve beyond floor to match adjacent duct insulation. Overlap damper sleeve and duct insulation at least 2 inches.

2. Pipe: Install insulation continuously through floor penetrations.
3. Seal penetrations through fire-rated assemblies according to Division 7 Section.

3.5 DUCT AND PLENUM INSULATION INSTALLATION

A. Blanket Insulation Installation on Ducts and Plenums: Secure with adhesive and insulation pins.

1. Apply adhesives according to manufacturer's recommended coverage rates per unit area, for 100 percent coverage of duct and plenum surfaces.
2. Apply adhesive to entire circumference of ducts and to all surfaces of fittings and transitions.
3. Install either capacitor-discharge-weld pins and speed washers or cupped-head, capacitor-discharge-weld pins on sides and bottom of horizontal ducts and sides of vertical ducts as follows:
   a. On duct sides with dimensions 18 inches and smaller, place pins along longitudinal centerline of duct. Space 3 inches maximum from insulation end joints, and 16 inches o.c.
   b. On duct sides with dimensions larger than 18 inches, place pins 16 inches o.c. each way, and 3 inches maximum from insulation joints. Install additional pins to hold insulation tightly against surface at cross bracing.

3.6 EQUIPMENT INSULATION INSTALLATION

A. Secure insulation with adhesive and anchor pins and speed washers.

1. Apply adhesives according to manufacturer's recommended coverage rates per unit area, for 100 percent coverage of tank and vessel surfaces.
2. Groove and score insulation materials to fit as closely as possible to equipment, including contours. Bevel insulation edges for cylindrical surfaces for tight joints. Stagger end joints.
3. Protect exposed corners with secured corner angles.
4. Install adhesively attached or self-sticking insulation hangers and speed washers on sides of tanks and vessels as follows:
   a. Do not weld anchor pins to ASME-labeled pressure vessels.
   b. Select insulation hangers and adhesive that are compatible with service temperature and with substrate.
   c. On tanks and vessels, maximum anchor-pin spacing is 3 inches from insulation end joints, and 16 inches o.c. in both directions.
   d. Do not overcompress insulation during installation.
   e. Cut and miter insulation segments to fit curved sides and domed heads of tanks and vessels.
   f. Impale insulation over anchor pins and attach speed washers.
   g. Cut excess portion of pins extending beyond speed washers or bend parallel with insulation surface. Cover exposed pins and washers with tape matching insulation facing.
5. Secure each layer of insulation with stainless-steel or aluminum bands. Select band material compatible with insulation materials.
6. Where insulation hangers on equipment and vessels are not permitted or practical and where insulation support rings are not provided, install a girdle network for securing insulation. Stretch prestressed aircraft cable around the diameter of vessel and make taut with clamps, turnbuckles, or breather springs. Place one circumferential girdle around equipment approximately 6 inches from each end. Install wire or cable between

two circumferential girdles 12 inches o.c. Install a wire ring around each end and around outer periphery of center openings, and stretch prestressed aircraft cable radially from the wire ring to nearest circumferential girdle. Install additional circumferential girdles along the body of equipment or tank at a minimum spacing of 48 inches o.c. Use this network for securing insulation with tie wire or bands.

7. Stagger joints between insulation layers at least 3 inches.
8. Install insulation in removable segments on equipment access doors, manholes, handholes, and other elements that require frequent removal for service and inspection.
9. Bevel and seal insulation ends around manholes, handholes, ASME stamps, and nameplates.
10. For equipment with surface temperatures below ambient, apply mastic to open ends, joints, seams, breaks, and punctures in insulation.

3.7 GENERAL PIPE INSULATION INSTALLATION

A. Requirements in this Article generally apply to all insulation materials except where more specific requirements are specified in various pipe insulation material installation articles.

B. Insulation Installation on Fittings, Valves, Strainers, Flanges, and Unions:

1. Install insulation over fittings, valves, strainers, flanges, unions, and other specialties with continuous thermal and vapor-retarder integrity, unless otherwise indicated.
2. Insulate pipe elbows using preformed fitting insulation or mitered fittings made from same material and density as adjacent pipe insulation. Each piece shall be butted tightly against adjoining piece and bonded with adhesive. Fill joints, seams, voids, and irregular surfaces with insulating cement finished to a smooth, hard, and uniform contour that is uniform with adjoining pipe insulation.
3. Insulate tee fittings with preformed fitting insulation or sectional pipe insulation of same material and thickness as used for adjacent pipe. Cut sectional pipe insulation to fit. Butt each section closely to the next and hold in place with tie wire. Bond pieces with adhesive.
4. Insulate valves using preformed fitting insulation or sectional pipe insulation of same material, density, and thickness as used for adjacent pipe. Overlap adjoining pipe insulation by not less than two times the thickness of pipe insulation, or one pipe diameter, whichever is thicker. For valves, insulate up to and including the bonnets, valve stuffing-box studs, bolts, and nuts. Fill joints, seams, and irregular surfaces with insulating cement.
5. Insulate strainers using preformed fitting insulation or sectional pipe insulation of same material, density, and thickness as used for adjacent pipe. Overlap adjoining pipe insulation by not less than two times the thickness of pipe insulation, or one pipe diameter, whichever is thicker. Fill joints, seams, and irregular surfaces with insulating cement. Insulate strainers so strainer basket flange or plug can be easily removed and replaced without damaging the insulation and jacket. Provide a removable reusable insulation cover. For below ambient services, provide a design that maintains vapor barrier.
6. Insulate flanges and unions using a section of oversized preformed pipe insulation. Overlap adjoining pipe insulation by not less than two times the thickness of pipe insulation, or one pipe diameter, whichever is thicker.
7. Cover segmented insulated surfaces with a layer of finishing cement and coat with a mastic. Install vapor-barrier mastic for below ambient services and a breather mastic for above ambient services. Reinforce the mastic with fabric-reinforcing mesh. Trowel the mastic to a smooth and well-shaped contour.

8. For services not specified to receive a field-applied jacket except for flexible elastomeric and polyolefin, install fitted PVC cover over elbows, tees, strainers, valves, flanges, and unions. Terminate ends with PVC end caps. Tape PVC covers to adjoining insulation facing using PVC tape.
9. Stencil or label the outside insulation jacket of each union with the word "UNION." Match size and color of pipe labels.

C. Insulate instrument connections for thermometers, pressure gages, pressure temperature taps, test connections, flow meters, sensors, switches, and transmitters on insulated pipes, vessels, and equipment. Shape insulation at these connections by tapering it to and around the connection with insulating cement and finish with finishing cement, mastic, and flashing sealant.

D. Install removable insulation covers at locations indicated. Installation shall conform to the following:

1. Make removable flange and union insulation from sectional pipe insulation of same thickness as that on adjoining pipe. Install same insulation jacket as adjoining pipe insulation.
2. When flange and union covers are made from sectional pipe insulation, extend insulation from flanges or union long at least two times the insulation thickness over adjacent pipe insulation on each side of flange or union. Secure flange cover in place with stainless-steel or aluminum bands. Select band material compatible with insulation and jacket.
3. Construct removable valve insulation covers in same manner as for flanges except divide the two-part section on the vertical center line of valve body.
4. When covers are made from block insulation, make two halves, each consisting of mitered blocks wired to stainless-steel fabric. Secure this wire frame, with its attached insulation, to flanges with tie wire. Extend insulation at least 2 inches over adjacent pipe insulation on each side of valve. Fill space between flange or union cover and pipe insulation with insulating cement. Finish cover assembly with insulating cement applied in two coats. After first coat is dry, apply and trowel second coat to a smooth finish.
5. Unless a PVC jacket is indicated in field-applied jacket schedules, finish exposed surfaces with a metal jacket.

3.8 CELLULAR-GLASS INSULATION INSTALLATION

A. Insulation Installation on Straight Pipes and Tubes:

1. Secure each layer of insulation to pipe with wire or bands and tighten bands without deforming insulation materials.
2. Where vapor barriers are indicated, seal longitudinal seams, end joints, and protrusions with vapor-barrier mastic and joint sealant.
3. For insulation with factory-applied jackets on above ambient services, secure laps with outward clinched staples at 6 inches o.c.
4. For insulation with factory-applied jackets on below ambient services, do not staple longitudinal tabs but secure tabs with additional adhesive as recommended by insulation material manufacturer and seal with vapor-barrier mastic and flashing sealant.

B. Insulation Installation on Pipe Flanges:

1. Install preformed pipe insulation to outer diameter of pipe flange.
2. Make width of insulation section same as overall width of flange and bolts, plus twice the thickness of pipe insulation.

3. Fill voids between inner circumference of flange insulation and outer circumference of adjacent straight pipe segments with cut sections of cellular-glass block insulation of same thickness as pipe insulation.
4. Install jacket material with manufacturer's recommended adhesive, overlap seams at least 1 inch, and seal joints with flashing sealant.

C. Insulation Installation on Pipe Fittings and Elbows:

1. Install preformed sections of same material as straight segments of pipe insulation when available. Secure according to manufacturer's written instructions.
2. When preformed sections of insulation are not available, install mitered sections of cellular-glass insulation. Secure insulation materials with wire or bands.

D. Insulation Installation on Valves and Pipe Specialties:

1. Install preformed sections of cellular-glass insulation to valve body.
2. Arrange insulation to permit access to packing and to allow valve operation without disturbing insulation.
3. Install insulation to flanges as specified for flange insulation application.

3.9 MINERAL-FIBER INSULATION INSTALLATION

A. Insulation Installation on Straight Pipes and Tubes:

1. Secure each layer of preformed pipe insulation to pipe with wire or bands and tighten bands without deforming insulation materials.
2. Where vapor barriers are indicated, seal longitudinal seams, end joints, and protrusions with vapor-barrier mastic and joint sealant.
3. For insulation with factory-applied jackets on above ambient surfaces, secure laps with outward clinched staples at 6 inches o.c.
4. For insulation with factory-applied jackets on below ambient surfaces, do not staple longitudinal tabs but secure tabs with additional adhesive as recommended by insulation material manufacturer and seal with vapor-barrier mastic and flashing sealant.

B. Insulation Installation on Pipe Flanges:

1. Install preformed pipe insulation to outer diameter of pipe flange.
2. Make width of insulation section same as overall width of flange and bolts, plus twice the thickness of pipe insulation.
3. Fill voids between inner circumference of flange insulation and outer circumference of adjacent straight pipe segments with mineral-fiber blanket insulation.
4. Install jacket material with manufacturer's recommended adhesive, overlap seams at least 1 inch, and seal joints with flashing sealant.

C. Insulation Installation on Pipe Fittings and Elbows:

1. Install preformed sections of same material as straight segments of pipe insulation when available.
2. When preformed insulation elbows and fittings are not available, install mitered sections of pipe insulation, to a thickness equal to adjoining pipe insulation. Secure insulation materials with wire or bands.

D. Insulation Installation on Valves and Pipe Specialties:

1. Install preformed sections of same material as straight segments of pipe insulation when available.
2. When preformed sections are not available, install mitered sections of pipe insulation to valve body.
3. Arrange insulation to permit access to packing and to allow valve operation without disturbing insulation.
4. Install insulation to flanges as specified for flange insulation application.

3.10 FIELD-APPLIED JACKET INSTALLATION

A. Where FSK jackets are indicated, install as follows:

1. Draw jacket material smooth and tight.
2. Install lap or joint strips with same material as jacket.
3. Secure jacket to insulation with manufacturer's recommended adhesive.
4. Install jacket with 1-1/2-inch laps at longitudinal seams and 3-inch wide joint strips at end joints.
5. Seal openings, punctures, and breaks in vapor-retarder jackets and exposed insulation with vapor-barrier mastic.

B. Where metal jackets are indicated, install with 2-inch overlap at longitudinal seams and end joints. Overlap longitudinal seams arranged to shed water. Seal end joints with weatherproof sealant recommended by insulation manufacturer. Secure jacket with stainless-steel bands 12 inches o.c. and at end joints.

3.11 FIRE-RATED INSULATION SYSTEM INSTALLATION

A. Where fire-rated insulation system is indicated, secure system to ducts and duct hangers and supports to maintain a continuous UL-listed fire rating.

B. Insulate duct access panels and doors to achieve same fire rating as duct.

C. Install firestopping at penetrations through fire-rated assemblies. Fire-stop systems are specified in Division 7 Section "Through-Penetration Firestop Systems."

3.12 FINISHES

A. Duct, Equipment, and Pipe Insulation with ASJ, Glass-Cloth, or Other Paintable Jacket Material: Paint jacket with paint system identified below.

1. Flat Acrylic Finish: Two finish coats over a primer that is compatible with jacket material and finish coat paint. Add fungicidal agent to render fabric mildew proof.
   a. Finish Coat Material: Interior, flat, latex-emulsion size.

B. Flexible Elastomeric Thermal Insulation: After adhesive has fully cured, apply two coats of insulation manufacturer's recommended protective coating.

C. Color: Final color as selected by Architect. Vary first and second coats to allow visual inspection of the completed Work.

D. Do not field paint aluminum or stainless-steel jackets.

3.13 PIPING INSULATION SCHEDULE, GENERAL

A. Acceptable preformed pipe and tubular insulation materials and thicknesses are identified for each piping system and pipe size range. If more than one material is listed for a piping system, selection from materials listed is Contractor's option.

B. Items Not Insulated: Unless otherwise indicated, do not install insulation on the following:

1. Fire-suppression piping.
2. Drainage piping located in crawl spaces.
3. Below-grade piping.
4. Chrome-plated pipes and fittings unless there is a potential for personnel injury.

3.14 INDOOR PIPING INSULATION SCHEDULE

A. Domestic Cold Water:

1. NPS 3 (DN 75) and Smaller: Insulation shall be any of the following:
   a. Cellular Glass: 1 inch thick.
   b. Mineral-Fiber Pipe Insulation, Type I: 1 inch thick.
2. NPS 4 (DN 32) and Larger: Insulation shall be any of the following:
   a. Cellular Glass: 1-1/2 inches thick.
   b. Mineral-Fiber Pipe Insulation, Type I: 1-1/2 inches thick.

B. Domestic Hot and Recirculated Hot Water:

1. NPS 3 (DN 75) and Smaller: Insulation shall be any of the following:
   a. Cellular Glass: 1-1/2 inches thick.
   b. Mineral-Fiber Pipe Insulation, Type I: 1 inch thick.
2. NPS 4 (DN 100) and Larger: Insulation shall be any of the following:
   a. Cellular Glass: 2 inches thick.
   b. Mineral-Fiber Pipe Insulation, Type I: 1-1/2 inch thick.

3.15 INDOOR, FIELD-APPLIED JACKET SCHEDULE

A. Install jacket over insulation material. For insulation with factory-applied jacket, install the field-applied jacket over the factory-applied jacket.

B. Piping, Exposed:

1. Aluminum, Smooth: 0.016 inch thick.

END OF SECTION 220719

SECTION 221116 - DOMESTIC WATER PIPING

PART 1 - GENERAL

1.1 RELATED DOCUMENTS

A. Drawings and general provisions of the Contract, including General and Supplementary Conditions and Division 1 Specification Sections, apply to this Section.

1.2 SUMMARY

A. This Section includes domestic water piping inside the building and 5 feet to outside of the building.

B. Related Sections include the following:

1. Division 22 Section "Domestic Water Piping Specialties" for water distribution piping specialties.

1.3 PERFORMANCE REQUIREMENTS

A. Provide components and installation capable of producing domestic water piping systems with 80 psig, unless otherwise indicated.

1.4 SUBMITTALS

A. Product Data: For pipe, tube, fittings, and couplings.

B. Water Samples: Specified in Part 3 "Cleaning" Article.

C. Field quality-control test reports.

1.5 QUALITY ASSURANCE

A. Piping materials shall bear label, stamp, or other markings of specified testing agency.

B. Comply with NSF 61, "Drinking Water System Components - Health Effects; Sections 1 through 9," for potable domestic water piping and components.

PART 2 - PRODUCTS

2.1 MANUFACTURERS

A. In other Part 2 articles where titles below introduce lists, the following requirements apply to product selection:

1. Available Manufacturers: Subject to compliance with requirements, manufacturers offering products that may be incorporated into the Work include, but are not limited to, manufacturers specified.
2. Manufacturers: Subject to compliance with requirements, provide products by one of the manufacturers specified.

2.2 PIPING MATERIALS

A. Refer to Part 3 "Pipe and Fitting Applications" Article for applications of pipe, tube, fitting, and joining materials.

B. Transition Couplings for Aboveground Pressure Piping: Coupling or other manufactured fitting the same size as, with pressure rating at least equal to and ends compatible with, piping to be joined.

2.3 COPPER TUBE AND FITTINGS

A. Soft Copper Tube: ASTM B 88, Types K and L (ASTM B 88M, Types A and B), water tube, annealed temper.

1. Copper Pressure Fittings: ASME B16.18, cast-copper-alloy or ASME B16.22, wrought-copper, solder-joint fittings. Furnish wrought-copper fittings if indicated.
2. Bronze Flanges: ASME B16.24, Class 150, with solder-joint ends. Furnish Class 300 flanges if required to match piping.
3. Copper Unions: MSS SP-123, cast-copper-alloy, hexagonal-stock body, with ball-and-socket, metal-to-metal seating surfaces, and solder-joint or threaded ends.

B. Hard Copper Tube: ASTM B 88, Types L (ASTM B 88M, Types B and C), water tube, drawn temper.

1. Copper Pressure Fittings: ASME B16.18, cast-copper-alloy or ASME B16.22, wrought- copper, solder-joint fittings. Furnish wrought-copper fittings if indicated.
2. Bronze Flanges: ASME B16.24, Class 150, with solder-joint ends. Furnish Class 300 flanges if required to match piping.
3. Copper Unions: MSS SP-123, cast-copper-alloy, hexagonal-stock body, with ball-and-socket, metal-to-metal seating surfaces, and solder-joint or threaded ends.

2.4 VALVES

A. General-duty ball valves are specified in Division 22 Section "Plumbing Valves."

B. Backflow preventers, strainers, and drain valves are specified in Division 22 Section "Domestic Water Piping Specialties."

PART 3 - EXECUTION

3.1 PIPE AND FITTING APPLICATIONS

A. Transition and special fittings with pressure ratings at least equal to piping rating may be used in applications below, unless otherwise indicated.

B. Flanges may be used on aboveground piping, unless otherwise indicated.

C. Fitting Option: brazed joints may be used on aboveground copper tubing.

D. Under-Building-Slab, Domestic Water Piping on House Side of Water Meter, NPS 4 (DN 100) and Smaller: Soft copper tube, Type K with no fittings.

E. Aboveground Domestic Water Piping: Use the following piping materials for each size range:

1. NPS 1 (DN 25) and Smaller: Hard copper tube, Type L; copper pressure fittings; and soldered joints.
2. NPS 2 (DN 50) and larger: Hard copper tube, Type L; copper pressure fittings; and soldered joints.

3.2 VALVE APPLICATIONS

A. Drawings indicate valve types to be used. Where specific valve types are not indicated, the following requirements apply:

1. Shutoff Duty: Use ball valves for piping NPS 3 (DN 75) and smaller.
2. Drain Duty: Hose-end drain valves.

B. Install drain valves at low points in horizontal piping, and where required to drain water piping.

1. Install hose-end drain valves at low points in water mains, risers, and branches.

3.3 PIPING INSTALLATION

A. Basic piping installation requirements are specified in Division 22 Section "Basic Mechanical Materials and Methods."

B. Install under-building-slab copper tubing according to CDA's "Copper Tube Handbook."

C. Install cast-iron sleeve with water stop and mechanical sleeve seal at each service pipe penetration through foundation wall. Select number of interlocking rubber links required to make installation watertight. Sleeves and mechanical sleeve seals are specified in Division 22 Section "Basic Mechanical Materials and Methods."

D. Install wall penetration system at each service pipe penetration through foundation wall. Make installation watertight. Wall penetration systems are specified in Division 22 Section "Basic Mechanical Materials and Methods."

E. Install domestic water piping level with 0.25 percent slope downward toward drain and plumb.

3.4 JOINT CONSTRUCTION

A. Basic piping joint construction requirements are specified in Division 22 Section "Basic Mechanical Materials and Methods."

B. Soldered Joints: Use ASTM B 813, water-flushable, lead-free flux; ASTM B 32, lead-free-alloy solder; and ASTM B 828 procedure, unless otherwise indicated.

3.5 HANGER AND SUPPORT INSTALLATION

A. Pipe hanger and support devices are specified in Division 22 Section "Hangers and Supports for Plumbing Piping and Equipment." Install the following:

1. Vertical Piping: MSS Type 8 or Type 42, clamps.
2. Individual, Straight, Horizontal Piping Runs: According to the following:
   a. 100 Feet and Less: MSS Type 1, adjustable, steel clevis hangers.
   b. Longer Than 100 Feet: MSS Type 43, adjustable roller hangers.
   c. Longer Than 100 Feet: MSS Type 49, spring cushion rolls, if indicated.
3. Multiple, Straight, Horizontal Piping Runs 100 Feet or Longer: MSS Type 44, pipe rolls. Support pipe rolls on trapeze.
4. Base of Vertical Piping: MSS Type 52, spring hangers.

B. Install supports according to Division 22 Section "Hangers and Supports for Plumbing Piping and Equipment."

C. Support vertical piping and tubing at base and at each floor.

D. Rod diameter may be reduced 1 size for double-rod hangers, to a minimum of 3/8 inch.

E. Install hangers for copper tubing with the following maximum horizontal spacing and minimum rod diameters:

1. NPS 3/4 (DN 20) and Smaller: 60 inches with 3/8-inch rod.
2. NPS 1 and NPS 1-1/4 (DN 25 and DN 32): 72 inches with 3/8-inch rod.
3. NPS 1-1/2 and NPS 2 (DN 40 and DN 50): 96 inches with 3/8-inch rod.
4. NPS 2-1/2 (DN 65): 108 inches with 1/2-inch rod.
5. NPS 3 to NPS 5 (DN 80 to DN 125): 10 feet with 1/2-inch rod.
6. NPS 6 (DN 150): 10 feet with 5/8-inch rod.

F. Install supports for vertical copper tubing every 10 feet.

3.6 CONNECTIONS

A. Drawings indicate general arrangement of piping, fittings, and specialties.

B. Install piping adjacent to equipment and machines to allow service and maintenance.

C. Connect domestic water piping to exterior water-service piping. Use transition fitting to join dissimilar piping materials.

3.7 FIELD QUALITY CONTROL

A. Inspect domestic water piping as follows:

1. Do not enclose, cover, or put piping into operation until it has been inspected and approved by authorities having jurisdiction.
2. During installation, notify authorities having jurisdiction at least 24 hours before inspection must be made. Perform tests specified below in presence of authorities having jurisdiction:
   a. Roughing-in Inspection: Arrange for inspection of piping before concealing or closing-in after roughing-in and before setting fixtures.
   b. Final Inspection: Arrange final inspection for authorities having jurisdiction to observe tests specified below and to ensure compliance with requirements.
3. Reinspection: If authorities having jurisdiction find that piping will not pass test or inspection, make required corrections and arrange for reinspection.
4. Reports: Prepare inspection reports and have them signed by authorities having jurisdiction.

B. Test domestic water piping as follows:

1. Fill domestic water piping. Check components to determine that they are not air bound and that piping is full of water.
2. Test for leaks and defects in new piping and parts of existing piping that have been altered, extended, or repaired. If testing is performed in segments, submit separate report for each test, complete with diagram of portion of piping tested.
3. Leave new, altered, extended, or replaced domestic water piping uncovered and unconcealed until it has been tested and approved. Expose work that was covered or concealed before it was tested.
4. Cap and subject piping to static water pressure of 50 psig above operating pressure, without exceeding pressure rating of piping system materials. Isolate test source and allow to stand for four hours. Leaks and loss in test pressure constitute defects that must be repaired.
5. Repair leaks and defects with new materials and retest piping or portion thereof until satisfactory results are obtained.
6. Prepare reports for tests and required corrective action.

3.8 ADJUSTING

A. Perform the following adjustments before operation:

1. Close drain valves, hydrants, and hose bibbs.
2. Open shutoff valves to fully open position.
3. Remove plugs used during testing of piping and plugs used for temporary sealing of piping during installation.
4. Remove and clean strainer screens. Close drain valves and replace drain plugs.
5. Check plumbing specialties and verify proper settings, adjustments, and operation.

3.9 CLEANING

A. Clean and disinfect potable and non-potable domestic water piping as follows:

1. Purge new piping and parts of existing domestic water piping that have been altered, extended, or repaired before using.
2. Use purging and disinfecting procedures prescribed by authorities having jurisdiction or, if methods are not prescribed, procedures described in either AWWA C651 or AWWA C652 or as described below:
    a. Flush piping system with clean, potable water until dirty water does not appear at outlets.
    b. Fill and isolate system according to either of the following:
        1) Fill system or part thereof with water/chlorine solution with at least 50 ppm of chlorine. Isolate with valves and allow to stand for 24 hours.
        2) Fill system or part thereof with water/chlorine solution with at least 200 ppm of chlorine. Isolate and allow to stand for three hours.
    c. Flush system with clean, potable water until no chlorine is in water coming from system after the standing time.
    d. Submit water samples in sterile bottles to authorities having jurisdiction. Repeat procedures if biological examination shows contamination.

B. Prepare and submit reports of purging and disinfecting activities.

C. Clean interior of domestic water piping system. Remove dirt and debris as work progresses.

END OF SECTION 221116

SECTION 221119 - DOMESTIC WATER PIPING SPECIALTIES

PART 1 - GENERAL

1.1 RELATED DOCUMENTS

A. Drawings and general provisions of the Contract, including General and Supplementary Conditions and Division 1 Specification Sections, apply to this Section.

1.2 SUMMARY

A. This Section includes the following domestic water piping specialties:

1. Balancing valves.
2. Strainers.
3. Drain valves.
4. Water hammer arresters.
5. Trap-seal primer valves.

B. All valves, strainers and fittings for portable water system shall be lead-free type in compliant with requirements of NSF/ANSI Standard 61.

C. PERFORMANCE REQUIREMENTS

D. Minimum Working Pressure for Domestic Water Piping Specialties: 80 psig, unless otherwise indicated.

1.3 SUBMITTALS

A. Product Data: For each type of product indicated.

B. Shop Drawings: Diagram power, signal, and control wiring.

C. Field quality-control test reports.

D. Operation and Maintenance Data: For domestic water piping specialties to include in emergency, operation, and maintenance manuals.

1.4 QUALITY ASSURANCE

A. Electrical Components, Devices, and Accessories: Listed and labeled as defined in NFPA 70, Article 100, by a testing agency acceptable to authorities having jurisdiction, and marked for intended use.

B. NSF Compliance:

1. Comply with NSF 14, "Plastics Piping Components and Related Materials," for plastic domestic water piping components.

2. Comply with NSF 61, "Drinking Water System Components - Health Effects; Sections 1 through 9."

PART 2 - PRODUCTS

2.1 BALANCING VALVES (Lead-Free Type)

A. Memory-Stop Balancing Valves:

1. Available Manufacturers: Subject to compliance with requirements, manufacturers offering products that may be incorporated into the Work include, but are not limited to, the following:
   a. Conbraco Industries, Inc.
   b. Milwaukee Valve Company.
   c. NIBCO INC.
   d. Red-White Valve Corp.
   e. Or Approved Equal.

2. Standard: MSS SP-110 for two-piece, copper-alloy ball valves.
3. Pressure Rating: 400-psig minimum CWP.
4. Size: NPS 2 (DN 50) or smaller.
5. Body: Copper alloy.
6. Port: Standard or full port.
7. Ball: Chrome-plated brass.
8. Seats and Seals: Replaceable.
9. End Connections: Solder joint or threaded.
10. Handle: Vinyl-covered steel with memory-setting device.

2.2 STRAINERS FOR DOMESTIC WATER PIPING (Lead-Free Type)

A. Y-Pattern Strainers:

1. Pressure Rating: 125 psig minimum, unless otherwise indicated.
2. Body: Bronze for NPS 2 (DN 50) and smaller; cast iron with interior lining complying with AWWA C550 or FDA-approved, epoxy coating and] for NPS 2-1/2 (DN 65) and larger.
3. End Connections: Threaded for NPS 2 (DN 50) and smaller; flanged for NPS 2-1/2 (DN 65) and larger.
4. Screen: Stainless steel with round perforations, unless otherwise indicated.
5. Perforation Size:
   a. Strainers NPS 2 (DN 50) and Smaller: 0.020 inch.
   b. Strainers NPS 2-1/2 to NPS 4 (DN 65 to DN 100): 0.045 inch.
6. Drain: Pipe plug or Factory-installed, hose-end drain valve.

2.3 DRAIN VALVES (Lead-Free Type)

A. Ball-Valve-Type, Hose-End Drain Valves:

1. Standard: MSS SP-110 for standard-port, two-piece ball valves.
2. Pressure Rating: 400-psig minimum CWP.

3. Size: NPS 3/4 (DN 20).
4. Body: Copper alloy.
5. Ball: Chrome-plated brass.
6. Seats and Seals: Replaceable.
7. Handle: Vinyl-covered steel.
8. Inlet: Threaded or solder joint.
9. Outlet: Threaded, short nipple with garden-hose thread complying with ASME B1.20.7 and cap with brass chain.

B. Gate-Valve-Type, Hose-End Drain Valves:

1. Standard: MSS SP-80 for gate valves.
2. Pressure Rating: Class 125.
3. Size: NPS 3/4 (DN 20).
4. Body: ASTM B 62 bronze.
5. Inlet: NPS 3/4 (DN 20) threaded or solder joint.
6. Outlet: Garden-hose thread complying with ASME B1.20.7 and cap with brass chain.

C. Stop-and-Waste Drain Valves:

1. Standard: MSS SP-110 for ball valves or MSS SP-80 for gate valves.
2. Pressure Rating: 200-psig minimum CWP or Class 125.
3. Size: NPS 3/4 (DN 20).
4. Body: Copper alloy or ASTM B 62 bronze.
5. Drain: NPS 1/8 (DN 6) side outlet with cap.

2.4 WATER HAMMER ARRESTERS

A. Water Hammer Arresters:

1. Available Manufacturers: Subject to compliance with requirements, manufacturers offering products that may be incorporated into the Work include, but are not limited to, the following:
2. Manufacturers: Subject to compliance with requirements, provide products by one of the following:
   a. AMTROL, Inc.
   b. Josam Company.
   c. MIFAB, Inc.
   d. PPP Inc.
   e. Sioux Chief Manufacturing Company, Inc.
   f. Smith, Jay R. Mfg. Co.; Division of Smith Industries, Inc.
   g. Tyler Pipe; Wade Div.
   h. Watts Drainage Products Inc.
   i. Or Approved Equal.

3. Standard: ASSE 1010 or PDI-WH 201.
4. Type: Stainless steel.
5. Size: PDI-WH 201, Sizes A through F.

2.5 TRAP-SEAL PRIMER VALVES

A. Supply-Type, Trap-Seal Primer Valves:

1. Available Manufacturers: Subject to compliance with requirements, manufacturers offering products that may be incorporated into the Work include, but are not limited to, the following:
2. Manufacturers: Subject to compliance with requirements, provide products by one of the following:
   a. MIFAB, Inc.
   b. PPP Inc.
   c. Sioux Chief Manufacturing Company, Inc.
   d. Smith, Jay R. Mfg. Co.; Division of Smith Industries, Inc.
   e. Watts Industries, Inc.; Water Products Div.
   f. Or Approved Equal.

3. Standard: ASSE 1018.
4. Pressure Rating: 125 psig minimum.
5. Body: Bronze.
6. Inlet and Outlet Connections: NPS 1/2 (DN 15) threaded, union, or solder joint.
7. Gravity Drain Outlet Connection: NPS 1/2 (DN 15) threaded or solder joint.
8. Finish: Chrome plated, or rough bronze for units used with pipe or tube that is not chrome finished.

PART 3 - EXECUTION

3.1 INSTALLATION

A. Refer to Division 22 Section "Basic Mechanical Materials and Methods" for piping joining materials, joint construction, and basic installation requirements.

B. Install water control valves with inlet and outlet shutoff valves. Install pressure gages on inlet and outlet.

C. Install balancing valves in locations where they can easily be adjusted.

D. Install water hammer arresters in water piping according to PDI-WH 201.

E. Install supply-type, trap-seal primer valves with outlet piping pitched down toward drain trap a minimum of 1 percent, and connect to floor-drain body, trap, or inlet fitting. Adjust valve for proper flow.

F. Install drainage-type, trap-seal primer valves as lavatory trap with outlet piping pitched down toward drain trap a minimum of 1 percent, and connect to floor-drain body, trap, or inlet fitting.

G. Install trap-seal primer systems with outlet piping pitched down toward drain trap a minimum of 1 percent, and connect to floor-drain body, trap, or inlet fitting. Adjust system for proper flow.

3.2 CONNECTIONS

A. Piping installation requirements are specified in other Division 22 Sections. Drawings indicate general arrangement of piping and specialties.

B. Ground equipment according to Division 26 Section "Grounding and Bonding."

C. Connect wiring according to Division 26 Section "Low-Voltage Electrical Power Cables."

3.3 LABELING AND IDENTIFYING

A. Equipment Nameplates and Signs: Install engraved plastic-laminate equipment nameplate or sign on or near each of the following:

1. Outlet boxes.
2. Supply-type, trap-seal primer valves.

B. Distinguish among multiple units, inform operator of operational requirements, indicate safety and emergency precautions, and warn of hazards and improper operations, in addition to identifying unit. Nameplates and signs are specified in Division 22 Section "Identification for Plumbing Piping and Equipment."

3.4 FIELD QUALITY CONTROL

A. Perform the following tests and prepare test reports:

1. Test each system according to authorities having jurisdiction and the device's reference standard.

B. Remove and replace malfunctioning domestic water piping specialties and retest as specified above.

3.5 ADJUSTING

A. Set field-adjustable pressure set points of water pressure-reducing valves.

B. Set field-adjustable flow set points of balancing valves.

C. Set field-adjustable temperature set points of temperature-actuated water mixing valves.

END OF SECTION 221119

SECTION 221123 – FACILITY NATURAL-GAS PIPING

PART 1 - GENERAL

1.1 RELATED DOCUMENTS

A. Drawings and general provisions of the Contract, including General and Supplementary Conditions and Division 1 Specification Sections, apply to this Section.

1.2 SUMMARY

A. This Section includes fuel gas piping within the building. Products include the following:

1. Pipe, tube, fittings, and joining materials.
2. Protective pipe and fitting coating.
3. Piping specialties.
4. Specialty valves.
5. Pressure regulators.

1.3 PROJECT CONDITIONS

A. Gas System Pressures: Two pressure ranges. Primary pressure is more than 0.5 psig but not more than 2.0 psig and is reduced to secondary pressure of 0.5 psig or less.

B. Design values of fuel gas supplied for these systems are as follows:

1. Nominal Heating Value: 1000 Btu/cu. ft.
2. Nominal Specific Gravity: 0.6.

1.4 SUBMITTALS

A. Product Data: For the following:

1. Specialty valves. Include pressure rating, capacity, settings, and electrical connection data of selected models.
2. Pressure regulators. Include pressure rating, capacity, and settings of selected models.

B. Shop Drawings: For fuel gas piping. Include plans and attachments to other work.

1. Wiring Diagrams: Power, signal, and control wiring.

C. Welding certificates.

D. Field quality-control test reports.

E. Operation and Maintenance Data: For natural gas specialties and accessories to include in emergency, operation, and maintenance manuals.

1.5 QUALITY ASSURANCE

A. Welding: Qualify processes and operators according to ASME Boiler and Pressure Vessel Code: Section IX.

B. Electrical Components and Devices: Listed and labeled as defined in NFPA 70, Article 100, by a testing agency acceptable to authorities having jurisdiction, and marked for intended use.

C. NFPA Standard: Comply with NFPA 54, "International Fuel Gas Code."

1.6 DELIVERY, STORAGE, AND HANDLING

A. Handling Flammable Liquids: Remove and legally dispose of liquids from drips in existing gas piping. Handle cautiously to avoid spillage and ignition. Notify fuel gas supplier. Handle flammable liquids used by Installer with proper precautions and do not leave on premises from end of one day to beginning of next day.

1.7 COORDINATION

A. Coordinate size and location of concrete bases. Cast anchor-bolt inserts into bases. Concrete, reinforcement, and formwork requirements are specified in Division 3.

PART 2 - PRODUCTS

2.1 MANUFACTURERS

A. In other Part 2 articles where titles below introduce lists, the following requirements apply to product selection:

1. Available Manufacturers: Subject to compliance with requirements, manufacturers offering products that may be incorporated into the Work include, but are not limited to, manufacturers specified.
2. Manufacturers: Subject to compliance with requirements, provide products by one of the manufacturers specified.

2.2 PIPING MATERIALS

A. Refer to Part 3 "Piping Applications" Article for applications of pipe, tube, fitting, and joining materials.

2.3 PIPES, TUBES, FITTINGS, AND JOINING MATERIALS

A. Steel Pipe: ASTM A 53/A 53M; Type E or S; Grade B; black. Wall thickness of wrought-steel pipe shall comply with ASME B36.10M.

1. Malleable-Iron Threaded Fittings: ASME B16.3, Class 150, standard pattern, with threaded ends according to ASME B1.20.1.

2. Steel Threaded Fittings: ASME B16.11, forged steel with threaded ends according to ASME B1.20.1.
3. Steel Welding Fittings: ASME B16.9, wrought steel or ASME B16.11, forged steel.
4. Unions: ASME B16.39, Class 150, malleable iron with brass-to-iron seat, ground joint, and threaded ends according to ASME B1.20.1.
5. Cast-Iron Flanges and Flanged Fittings: ASME B16.1, Class 125.
6. Joint Compound and Tape: Suitable for natural gas.
7. Steel Flanges and Flanged Fittings: ASME B16.5.
8. Gasket Material: Thickness, material, and type suitable for natural gas.

2.4 PROTECTIVE COATING

A. Furnish pipe and fittings with factory-applied, corrosion-resistant polyethylene coating for use in contact with materials that may corrode the pipe.

2.5 PIPING SPECIALTIES

A. Flexible Connectors: ANSI Z21.24, copper alloy.

B. Quick-Disconnect Devices: ANSI Z21.41, convenience outlets and matching plug connector.

2.6 SPECIALTY VALVES

A. Valves, NPS 2 (DN 50) and Smaller: Threaded ends according to ASME B1.20.1 for pipe threads.

B. Valves, NPS 2-1/2 (DN 65) and Larger: Flanged ends according to ASME B16.5 for steel flanges and according to ASME B16.24 for copper and copper-alloy flanges.

C. Appliance Connector Valves: ANSI Z21.15 and CSA International listed.

1. Manufacturers:
   a. American Valve Inc.
   b. B&K Industries, Inc.
   c. Brass Craft Manufacturing Co.
   d. Cimberio Valves, S. p. A.
   e. Conbraco Industries, Inc.; Apollo Div.
   f. E. M. Plastic and Electric Products, Ltd.; Neo Valve Div.
   g. JMF Company.
   h. Jomar International Ltd.
   i. Key Gas Components, Inc.
   j. Legend Valve and Fitting, Inc.
   k. McDonald, A. Y. Mfg. Co.
   l. Mueller Co.; Mueller Gas Products Div.
   m. Newman Hattersley Ltd.; Specialty Valves Div.
   n. Robert Manufacturing Co.
   o. State Metals, Inc.
   p. Watts Industries, Inc.; Water Products Div.

D. Gas Stops: Bronze body with AGA stamp, plug type with bronze plug and flat or square head, ball type with chrome-plated brass ball and lever handle, or butterfly valve with stainless-steel disc and fluorocarbon elastomer seal and lever handle; 2-psig minimum pressure rating.

E. Gas Valves, NPS 2 (DN 50) and Smaller: ASME B16.33 and CSA International-listed bronze body and 125-psig pressure rating.

1. Manufacturers:
   a. BMI Canada, Inc.
   b. Crane Valves.
   c. Dungs, Karl, Inc.
   d. Flow Control Equipment, Inc.
   e. Grinnell Corp.
   f. Honeywell International Inc.
   g. Jomar International Ltd.
   h. KITZ Corporation.
   i. Legend Valve and Fitting, Inc.
   j. Lyall, R. W. & Co., Inc.
   k. McDonald, A. Y. Mfg. Co.
   l. Milwaukee Valve Company.
   m. Mueller Co.; Mueller Gas Products Div.
   n. NIBCO INC.
   o. Red-White Valve Corp.
   p. Velan Inc.
   q. Watts Industries, Inc.; Water Products Div.
2. Tamperproof Feature: Include design for locking.

F. Plug Valves, NPS 2-1/2 (DN 65) and Larger: ASME B16.38 and MSS SP-78 cast-iron, lubricated plug valves, with 125-psig pressure rating.

1. Manufacturers:
   a. Flow Control Equipment, Inc.
   b. Milliken Valve Co., Inc.
   c. Nordstrom Valves, Inc.
   d. Olson Technologies, Inc.; Homestead Valve Div.
   e. Walworth Co.
2. Tamperproof Feature: Include design for locking.

G. General-Duty Valves, NPS 2-1/2 (DN 65) and Larger: ASME B16.38, cast-iron body, suitable for fuel gas service, with "WOG" indicated on valve body, and 125-psig pressure rating.

1. Gate Valves: MSS SP-70, OS&Y type with solid wedge.
2. Butterfly Valves: MSS SP-67, lug type with lever handle.

H. Automatic Gas Valves: ANSI Z21.21, with electrical/mechanical operator for actuation by appliance automatic shutoff device.

1. Manufacturers:
   a. ASCO General Controls.
   b. ASCO Power Technologies, LP; Division of Emerson.
   c. ASCO Valve Canada, Division of Emerson Electric Canada Limited.
   d. Dungs, Karl, Inc.
   e. Eaton Corporation; Controls Div.
   f. Eclipse Combustion, Inc.

g. GPS Gas Protection Systems Inc.
h. Honeywell International Inc.
i. Johnson Controls.

I. Electrically Operated Gas Valves: UL 429, bronze, aluminum, or cast-iron body solenoid valve; 120-V ac, 60 Hz, Class B, continuous-duty molded coil. Include NEMA ISC 6, Type 4, coil enclosure and electrically opened and closed dual coils. Valve position shall normally be closed.

1. Manufacturers:
   a. ASCO General Controls.
   b. ASCO Power Technologies, LP; Division of Emerson.
   c. Dungs, Karl, Inc.
   d. Eclipse Combustion, Inc.
   e. Goyen Valve Corp.; Tyco Environmental Systems.
   f. Magnatrol Valve Corp.
   g. Watts Industries, Inc.

2.7 PRESSURE REGULATORS

A. Description: Single stage and suitable for fuel gas service. Include steel jacket and corrosion-resistant components, elevation compensator, and atmospheric vent.

1. Manufacturers:
   a. Service Pressure Regulators:
      1) American Meter Company.
      2) Fisher Controls International, Inc.; Division of Emerson.
      3) Invensys.
      4) National Meter Industries, Inc.
      5) Richards Industries, Inc.; Jordan Valve Div.
      6) Schlumberger Limited; Gas Div.
   b. Line Pressure Regulators:
      1) American Meter Company.
      2) Donkin, Bryan RMG Canada, Ltd.
      3) Eclipse Combustion, Inc.
      4) Fisher Controls International, Inc.; Division of Emerson.
      5) Invensys.
      6) Maxitrol Company.
      7) National Meter Industries, Inc.
      8) Richards Industries, Inc.; Jordan Valve Div.
      9) Schlumberger Limited; Gas Div.
   c. Appliance Pressure Regulators:
      1) Canadian Meter Co., Inc.
      2) Eaton Corporation; Controls Div.
      3) Harper Wyman Co.
      4) Maxitrol Company.
      5) SCP, Inc.
2. NPS 2 (DN 50) and Smaller: Threaded ends according to ASME B1.20.1 for pipe threads.
3. NPS 2-1/2 (DN 65) and Larger: Flanged ends according to ASME B16.5 for steel flanges and according to ASME B16.24 for copper and copper-alloy flanges.
4. Service Pressure Regulators: ANSI Z21.80. Include 100-psig minimum inlet pressure rating.

5. Line Pressure Regulators: ANSI Z21.80 with 2-psig minimum inlet pressure rating.
6. Line Pressure Regulators: ANSI Z21.80 with 10-psig inlet pressure rating, unless otherwise indicated.
7. Appliance Pressure Regulators: ANSI Z21.18. Regulator may include vent limiting device, instead of vent connection, if approved by authorities having jurisdiction.

B. Pressure Regulator Vents: Factory- or field-installed, corrosion-resistant screen in opening if not connected to vent piping.

PART 3 - EXECUTION

3.1 EXAMINATION

A. Examine roughing-in for fuel piping system to verify actual locations of piping connections before equipment installation.

1. Proceed with installation only after unsatisfactory conditions have been corrected.

3.2 PREPARATION

A. Close equipment shutoff valves before turning off fuel gas to premises or section of piping. Perform leakage test as specified in "Field Quality Control" Article to determine that all equipment is turned off in affected piping section.

3.3 PIPING APPLICATIONS

A. Flanges, unions, transition, and special fittings with pressure ratings same as or higher than system pressure rating may be used in applications below, unless otherwise indicated.

B. Fuel Gas Piping, 2 psig or Less - aboveground or in pipe tunnel:

1. NPS 3/4 to NPS 2 (DN 20 and DN 50) Steel pipe, malleable-iron threaded fittings, and threaded joints.
2. NPS 2-1/2 (DN 65) and Larger: Steel pipe, steel welding fittings, and welded joints.

C. Fuel Gas Piping, 2 psig or Less below slab:

1. NPS 3/4 and NPS 6 (DN 20 and DN 50) polyethylene (PE) plastic pipe with heat-fused joints & fittings in accordance with ASTM D 2513. Provide anodeless risers to transition between underground PE pipe and above ground black iron pipe. Provide yellow insulated copper tracer wire adjacent to all underground PE pipe. Terminate the tracer wire above grade at each end of the PE pipe.

3.4 VALVE APPLICATIONS

A. Appliance Shutoff Valves for Pressure 0.5 psig or Less: Appliance connector valve or gas stop.

B. Appliance Shutoff Valves for Pressure 0.5 to 2 psig: Gas stop or gas valve.

C. Piping Line Valves, NPS 2 (DN 50) and Smaller: Gas valve.

D. Piping Line Valves, NPS 2-1/2 (DN 65) and Larger: Plug valve or general-duty valve.

3.5 PIPING INSTALLATION

A. Basic piping installation requirements are specified in Division 23 Section "Common Work Results for HVAC."

B. Concealed Locations: Except as specified below, install concealed gas piping in airtight conduit constructed of Schedule 40, seamless, black steel pipe with welded joints. Vent conduit to outside and terminate with screened vent cap.

1. Above-Ceiling Locations: Gas piping may be installed in accessible spaces, subject to approval of authorities having jurisdiction, whether or not such spaces are used as plenums. Do not locate valves above ceilings.
2. In Floors: Gas piping with welded joints and protective wrapping specified in Part 2 "Protective Coating" Article may be installed in floors, subject to approval of authorities having jurisdiction. Surround piping cast in concrete slabs with minimum of 1-1/2 inches of concrete. Piping may not be in physical contact with other metallic structures such as reinforcing rods or electrically neutral conductors. Do not embed piping in concrete slabs containing quick-set additives or cinder aggregate.
3. In Floor Channels: Gas piping may be installed in floor channels, subject to approval of authorities having jurisdiction. Channels must have cover and be open to space above cover for ventilation.
4. In Partitions: Do not install concealed piping in solid partitions. Protect tubing from physical damage when installed inside partitions or hollow walls.
   a. Exception: Tubing passing through partitions or walls.
5. In Walls: Gas piping with welded joints and protective wrapping specified in Part 2 "Protective Coating" Article may be installed in masonry walls, subject to approval of authorities having jurisdiction.
6. Prohibited Locations: Do not install gas piping in or through circulating air ducts, clothes or trash chutes, chimneys or gas vents (flues), ventilating ducts, or dumbwaiter or elevator shafts.
   a. Exception: Accessible above-ceiling space specified above.

C. Drips and Sediment Traps: Install drips at points where condensate may collect. Include outlets of service meters. Locate where readily accessible for cleaning and emptying. Do not install where condensate would be subject to freezing.

1. Construct drips and sediment traps using tee fitting with bottom outlet plugged or capped. Use minimum-length nipple of 3 pipe diameters, but not less than 3 inches long, and same size as connected pipe. Install with space between bottom of drip and floor for removal of plug or cap.

D. Conceal pipe installations in walls, pipe spaces, utility spaces, above ceilings, below grade or floors, and in floor channels, unless indicated to be exposed to view.

E. Install fuel gas piping at uniform grade of 0.1 percent slope upward toward risers.

F. Use eccentric reducer fittings to make reductions in pipe sizes. Install fittings with level side down.

G. Connect branch piping from top or side of horizontal piping.

H. Install unions in pipes NPS 2 (DN 50) and smaller, adjacent to each valve, at final connection to each piece of equipment, and elsewhere as indicated. Unions are not required on flanged devices.

I. Install strainer on inlet of each line pressure regulator and automatic and electrically operated valve.

J. Install pressure gage upstream and downstream from each line pressure regulator. Pressure gages are specified in Division 22.

K. Install flanges on valves, specialties, and equipment having NPS 2-1/2 (DN 65) and larger connections.

L. Install vent piping for gas pressure regulators and gas trains, extend outside building, and vent to atmosphere. Terminate vents with turned-down, reducing-elbow fittings with corrosion-resistant insect screens in large end.

M. Install containment conduits for gas piping below slabs, within building, in gastight conduits extending minimum of 4 inches outside building and vented to atmosphere. Terminate vents with turned-down, reducing-elbow fittings with corrosion-resistant insect screens in large end. Prepare and paint outside of conduits with coal-tar, epoxy-polyamide paint according to SSPC-Paint 16.

3.6 JOINT CONSTRUCTION

A. Basic piping joint construction is specified in Division 22.

B. Use materials suitable for fuel gas.

C. Patch factory-applied protective coating as recommended by manufacturer at field welds and where damage to coating occurs during construction.

3.7 HANGER AND SUPPORT INSTALLATION

A. Pipe hanger and support and equipment support materials and installation requirements are specified in Division 23 Section "Hangers and Supports for HVAC Piping and Equipment."

B. Install hangers for horizontal steel piping with the following maximum spacing and minimum rod sizes:

1. NPS 1 (DN 25) and Smaller: Maximum span, 96 inches; minimum rod size, 3/8 inch.
2. NPS 1-1/4 (DN 32): Maximum span, 108 inches; minimum rod size, 3/8 inch.
3. NPS 1-1/2 and NPS 2 (DN 40 and DN 50): Maximum span, 108 inches; minimum rod size, 3/8 inch.
4. NPS 2-1/2 to NPS 3-1/2 (DN 65 to DN 90): Maximum span, 10 feet; minimum rod size, 1/2 inch.

5. NPS 4 (DN 100) and Larger: Maximum span, 10 feet; minimum rod size, 5/8 inch.

3.8 CONNECTIONS

A. Drawings indicate general arrangement of fuel gas piping, fittings, and specialties.

B. Install piping adjacent to appliances to allow service and maintenance.

C. Connect piping to appliances using gas with shutoff valves and unions. Install valve upstream from and within 72 inches of each appliance. Install union downstream from valve.

D. Sediment Traps: Install tee fitting with capped nipple in bottom to form drip, as close as practical to inlet of each appliance using gas.

E. Ground equipment according to Division 26 Section "Grounding and Bonding."

1. Do not use gas pipe as grounding electrode.

F. Connect wiring according to Division 26 Section "Building Wire and Cable."

3.9 LABELING AND IDENTIFYING

A. Equipment Nameplates and Signs: Install engraved plastic-laminate equipment nameplate or sign on or near each service meter, pressure regulator, and specialty valve.

1. Text: In addition to name of identified unit, distinguish between multiple units, inform operator of operational requirements, indicate safety and emergency precautions, and warn of hazards and improper operations.
2. Nameplates, pipe identification, and signs are specified in Division 23 Section "Mechanical Identification."

3.10 PAINTING

A. Use materials and procedures in Division 09 Sections.

B. Paint exterior service meters, pressure regulators, and specialty valves.

1. Color: Gray.

C. Paint gas piping.

1. Color: Yellow (1 primer, 2 finish coats).

3.11 FIELD QUALITY CONTROL

A. Test, inspect, and purge piping according to NFPA 54 and requirements of authorities having jurisdiction.

B. Repair leaks and defects with new materials and retest system until satisfactory results are obtained.

C. Verify capacities and pressure ratings of service meters, pressure regulators, valves, and specialties.

D. Verify correct pressure settings for pressure regulators.

E. Verify that specified piping tests are complete.

END OF SECTION 221123

SECTION 221316 - SANITARY WASTE AND VENT PIPING

PART 1 - GENERAL

1.1 RELATED DOCUMENTS

A. Drawings and general provisions of the Contract, including General and Supplementary Conditions and Division 1 Specification Sections, apply to this Section.

1.2 SUMMARY

A. This Section includes the following for soil, waste, and vent piping inside the building:

1. Pipe, tube, and fittings.
2. Special pipe fittings.
3. Encasement for underground metal piping.

1.3 PERFORMANCE REQUIREMENTS

A. Components and installation shall be capable of withstanding the following minimum working pressure, unless otherwise indicated:

1. Soil, Waste, and Vent Piping: 10-foot head of water.

B. Seismic Performance: Soil, waste, and vent piping and support and installation shall be capable of withstanding the effects of seismic events determined according to ASCE 7, "Minimum Design Loads for Buildings and Other Structures" and International Building Code – New Jersey Edition – Latest Edition

1.4 SUBMITTALS

A. Product Data: For pipe, tube, fittings, and couplings.

B. Shop Drawings:

1. Design Calculations: Signed and sealed by a qualified professional engineer for selecting seismic restraints.
2. Sovent Drainage System: Include plans, elevations, sections, and details.

C. Field quality-control inspection and test reports.

1.5 QUALITY ASSURANCE

A. Piping materials shall bear label, stamp, or other markings of specified testing agency.

PART 2 - PRODUCTS

2.1 MANUFACTURERS

A. In other Part 2 articles where titles below introduce lists, the following requirements apply to product selection:

1. Available Manufacturers: Subject to compliance with requirements, manufacturers offering products that may be incorporated into the Work include but are not limited to, manufacturers specified.
2. Manufacturers: Subject to compliance with requirements, provide products by one of the manufacturers specified.

2.2 PIPING MATERIALS

A. Refer to Part 3 "Piping Applications" Article for applications of pipe, tube, fitting, and joining materials.

2.3 PVC PIPE AND FITTINGS

A. Solid-Wall PVC Pipe: ASTM D 2665, drain, waste, and vent.

B. Cellular-Core PVC Pipe: ASTM F 891, Schedule 40.

C. PVC Socket Fittings: ASTM D 2665, made to ASTM D 3311, drain, waste, and vent patterns and to fit Schedule 40 pipe.

D. Adhesive Primer: ASTM F 656.

1. Adhesive primer shall have a VOC content of 550 g/L or less when calculated according to 40 CFR 59, Subpart D (EPA Method 24).
2. Adhesive primer shall comply with the testing and product requirements of the California Department of Health Services' "Standard Practice for the Testing of Volatile Organic Emissions from Various Sources Using Small-Scale Environmental Chambers."

E. Solvent Cement: ASTM D 2564.

1. PVC solvent cement shall have a VOC content of 510 g/L or less when calculated according to 40 CFR 59, Subpart D (EPA Method 24).
2. Solvent cement shall comply with the testing and product requirements of the California Department of Health Services' "Standard Practice for the Testing of Volatile Organic Emissions from Various Sources Using Small-Scale Environmental Chambers."

2.4 SPECIAL PIPE FITTINGS

A. Shielded Nonpressure Pipe Couplings: ASTM C 1460, elastomeric or rubber sleeve with full-length, corrosion-resistant outer shield and corrosion-resistant-metal tension band and tightening mechanism on each end.

1. Manufacturers:
    a. Cascade Waterworks Mfg. Co.
    b. Mission Rubber Co.
    c. Or Approved Equal.

B. Pressure Pipe Couplings: AWWA C219 metal, sleeve-type same size as, with pressure rating at least equal to, and ends compatible with, pipes to be joined.

1. Manufacturers:
    a. Cascade Waterworks Mfg. Co.
    b. Dresser, Inc.; DMD Div.
    c. EBAA Iron Sales, Inc.
    d. JCM Industries, Inc.
    e. Romac Industries, Inc.
    f. Viking Johnson.
    g. Or Approved Equal.

2. Center-Sleeve Material: Manufacturer's standard.
3. Gasket Material: Natural or synthetic rubber.
4. Metal Component Finish: Corrosion-resistant coating or material.

C. Flexible Ball Joints: Ductile-iron fitting with combination of flanged and mechanical-joint ends complying with AWWA C110 or AWWA C153. Include gasketed ball-joint section and ductile-iron gland, rubber gasket, and steel bolts.

1. Manufacturers:
    a. EBAA Iron Sales, Inc.
    b. Or Approved Equal.

D. Expansion Joints: Two or three-piece, ductile-iron assembly consisting of telescoping sleeve(s) with gaskets and restrained-type, ductile-iron, bell-and-spigot end sections complying with AWWA C110 or AWWA C153. Select and assemble components for expansion indicated. Include AWWA C111, ductile-iron glands, rubber gaskets, and steel bolts.

1. Manufacturers:
    a. EBAA Iron Sales, Inc.
    b. Romac Industries, Inc.
    c. Star Pipe Products; Star Fittings Div.
    d. Or Approved Equal.

E. Wall-Penetration Fittings: Compound, ductile-iron coupling fitting with sleeve and flexing sections for up to 20-degree deflection, gaskets, and restrained-joint ends complying with AWWA C110 or AWWA C153. Include AWWA C111, ductile-iron glands, rubber gaskets, and steel bolts.

1. Manufacturers:
    a. SIGMA Corp.
    b. Or Approved Equal.

2.5 ENCASEMENT FOR UNDERGROUND METAL PIPING

A. Description: ASTM A 674 or AWWA C105, high-density, crosslaminated PE film of 0.004-inch minimum thickness.

B. Form: Sheet or tube.

C. Color: Black.

PART 3 - EXECUTION

3.1 EXCAVATION

A. Refer to Division 2 Section "Earthwork" for excavating, trenching, and backfilling.

3.2 PIPING APPLICATIONS

A. Flanges and unions may be used on aboveground pressure piping, unless otherwise indicated.

B. Aboveground, soil and waste piping shall be any of the following:

1. Service class, cast-iron soil pipe and fittings; gaskets; and gasketed joints.
2. Hubless cast-iron soil pipe and fittings and couplings; and hubless-coupling joints.
3. Steel pipe, drainage fittings, and threaded joints.
4. Stainless-steel pipe and fittings, gaskets, and gasketed joints.
5. Copper DWV tube, copper drainage fittings, and soldered joints.
6. Dissimilar Pipe-Material Couplings: Shielded Non-pressure pipe couplings for joining dissimilar pipe materials with small difference in OD.

C. Aboveground, soil and waste piping NPS 5 (DN 125) and larger shall be any of the following:

1. Service class, cast-iron soil pipe and fittings; gaskets; and gasketed joints.
2. Hubless cast-iron soil pipe and fittings shielded, stainless-steel couplings; and hubless-coupling joints.
3. Steel pipe, drainage fittings, and threaded joints.
4. Dissimilar Pipe-Material Couplings: Shielded Non-pressure pipe couplings for joining dissimilar pipe materials with small difference in OD.

D. Aboveground, vent piping NPS 4 (DN 100) and smaller shall be any of the following:

1. Service class, cast-iron soil pipe and fittings; gaskets; and gasketed joints.
2. Hubless cast-iron soil pipe and fittings; couplings; and hubless-coupling joints.
3. Steel pipe, drainage fittings, and threaded joints.
4. Stainless-steel pipe and fittings gaskets, and gasketed joints.
5. Copper DWV tube, copper drainage fittings, and soldered joints.
   a. Option for Vent Piping, NPS 2-1/2 and NPS 3-1/2 (DN 65 and DN 90): Hard copper tube, Type M (Type C); copper pressure fittings; and soldered joints.
6. Dissimilar Pipe-Material Couplings: Shielded nonpressure pipe couplings for joining dissimilar pipe materials with small difference in OD.

E. Aboveground, vent piping NPS 5 (DN 125) and larger shall be any of the following:

1. Service class, cast-iron soil pipe and fittings; gaskets; and gasketed joints.
2. Hubless cast-iron soil pipe and fittings; shielded, stainless-steel couplings; and hubless-coupling joints.
3. Steel pipe, drainage fittings, and threaded joints.
4. Dissimilar Pipe-Material Couplings: Shielded Non-pressure pipe couplings for joining dissimilar pipe materials with small difference in OD.

F. Underground, soil, waste, and vent piping NPS 4 (DN 100) and smaller shall be any of the following:

1. Service class, cast-iron bell and spigot type soil pipe with gasketed joints.
2. Stainless-steel pipe and fittings, gaskets, and gasketed joints.
3. Dissimilar Pipe-Material Couplings: Shielded Non-pressure pipe couplings for joining dissimilar pipe materials with small difference in OD.

G. Underground, soil and waste piping NPS 5 (DN 125) and larger shall be any of the following:

1. Service class, cast-iron bell and spigot type soil pipe with gasketed joints.
2. Dissimilar Pipe-Material Couplings: Shielded nonpressure pipe couplings for joining dissimilar pipe materials with small difference in OD.

3.3 PIPING INSTALLATION

A. Basic piping installation requirements are specified in Division 22 Section "Basic Mechanical Materials and Methods."

B. Install seismic restraints on piping. Seismic-restraint devices are specified in Division 22 Section "Vibration and Seismic Controls."

C. Install cleanouts at grade and extend to where building sanitary drains connect to building sanitary sewers.

D. Install underground, ductile-iron, special pipe fittings according to AWWA C600.

1. Install encasement on piping according to ASTM A 674 or AWWA C105.

E. Install cast-iron sleeve with water stop and mechanical sleeve seal at each service pipe penetration through foundation wall. Select number of interlocking rubber links required to make installation watertight. Sleeves and mechanical sleeve seals are specified in Division 22 Section "Basic Mechanical Materials and Methods."

F. Install wall-penetration fitting at each service pipe penetration through foundation wall. Make installation watertight.

G. Install cast-iron soil piping according to CISPI's "Cast Iron Soil Pipe and Fittings Handbook," Chapter IV, "Installation of Cast Iron Soil Pipe and Fittings."

1. Install encasement on underground piping according to ASTM A 674 or AWWA C105.

H. Make changes in direction for soil and waste drainage and vent piping using appropriate branches, bends, and long-sweep bends. Sanitary tees and short-sweep 1/4 bends may be used on vertical stacks if change in direction of flow is from horizontal to vertical. Use long-turn, double Y-branch and 1/8-bend fittings if 2 fixtures are installed back to back or side by side with common drain pipe. Straight tees, elbows, and crosses may be used on vent lines.

Do not change direction of flow more than 90 degrees. Use proper size of standard increasers and reducers if pipes of different sizes are connected. Reducing size of drainage piping in direction of flow is prohibited.

I. Lay buried building drainage piping beginning at low point of each system. Install true to grades and alignment indicated, with unbroken continuity of invert. Place hub ends of piping upstream. Install required gaskets according to manufacturer's written instructions for use of lubricants, cements, and other installation requirements. Maintain swab in piping and pull past each joint as completed.

J. Install soil and waste drainage and vent piping at the following minimum slopes, unless otherwise indicated:

1. Building Sanitary Drain: 2 percent downward in direction of flow for piping NPS 3 (DN 80) and smaller; 1 percent downward in direction of flow for piping NPS 4 (DN 100) and larger.
2. Horizontal Sanitary Drainage Piping: 2 percent downward in direction of flow.
3. Vent Piping: 1 percent down toward vertical fixture vent or toward vent stack.

K. Install engineered soil and waste drainage and vent piping systems as follows:

1. Combination Waste and Vent: Comply with standards of authorities having jurisdiction.
2. Sovent Drainage System: Comply with ASSE 1043 and sovent fitting manufacturer's written installation instructions.
3. Reduced-Size Venting: Comply with standards of authorities having jurisdiction.

L. Sleeves are not required for cast-iron soil piping passing through concrete slabs-on-grade if slab is without membrane waterproofing.

M. Do not enclose, cover, or put piping into operation until it is inspected and approved by authorities having jurisdiction.

3.4 JOINT CONSTRUCTION

A. Basic piping joint construction requirements are specified in Division 22 Section "Basic Mechanical Materials and Methods."

B. Join hub-and-spigot, cast-iron soil piping with gasket joints according to CISPI's "Cast Iron Soil Pipe and Fittings Handbook" for compression joints.

C. Join hubless cast-iron soil piping according to CISPI 310 and CISPI's "Cast Iron Soil Pipe and Fittings Handbook" for hubless-coupling joints.

D. Soldered Joints: Use ASTM B 813, water-flushable, lead-free flux; ASTM B 32, lead-free-alloy solder; and ASTM B 828 procedure, unless otherwise indicated.

3.5 VALVE INSTALLATION

A. General valve installation requirements are specified in Division 22 Section "Plumbing Valves."

3.6 HANGER AND SUPPORT INSTALLATION

A. Seismic-restraint devices are specified in Division 22 Section "Vibration Controls and Seismic Restraints."

B. Pipe hangers and supports are specified in Division 22 Section "Hangers and Supports." Install the following:

1. Vertical Piping: MSS Type 8 or Type 42, clamps.
2. Install individual, straight, horizontal piping runs according to the following:
   a. 100 Feet and Less: MSS Type 1, adjustable, steel clevis hangers.
   b. Longer Than 100 Feet: MSS Type 43, adjustable roller hangers.
   c. Longer Than 100 Feet, if Indicated: MSS Type 49, spring cushion rolls.
3. Multiple, Straight, Horizontal Piping Runs 100 Feet or Longer: MSS Type 44, pipe rolls. Support pipe rolls on trapeze.
4. Base of Vertical Piping: MSS Type 52, spring hangers.

C. Install supports according to Division 22 Section "Hangers and Supports."

D. Support vertical piping and tubing at base and at each floor.

E. Rod diameter may be reduced 1 size for double-rod hangers, with 3/8-inch minimum rods.

F. Install hangers for cast-iron soil piping with the following maximum horizontal spacing and minimum rod diameters:

1. NPS 1-1/2 and NPS 2 (DN 40 and DN 50): 60 inches with 3/8-inch rod.
2. NPS 3 (DN 80): 60 inches with 1/2-inch rod.
3. NPS 4 and NPS 5 (DN 100 and DN 125): 60 inches with 5/8-inch rod.
4. NPS 6 (DN 150): 60 inches with 3/4-inch rod.

G. Install supports for vertical cast-iron soil piping every 15 feet.

H. Install hangers for steel piping with the following maximum horizontal spacing and minimum rod diameters:

1. NPS 1-1/4 (DN 32): 84 inches with 3/8-inch rod.
2. NPS 1-1/2 (DN 40): 108 inches with 3/8-inch rod.
3. NPS 2 (DN 50): 10 feet with 3/8-inch rod.
4. NPS 2-1/2 (DN 65): 11 feet with 1/2-inch rod.
5. NPS 3 (DN 80): 12 feet with 1/2-inch rod.
6. NPS 4 and NPS 5 (DN 100 and DN 125): 12 feet with 5/8-inch rod.
7. NPS 6 (DN 150): 12 feet with 3/4-inch rod.

I. Install supports for vertical steel piping every 15 feet.

J. Install hangers for stainless-steel piping with the following maximum horizontal spacing and minimum rod diameters:

1. NPS 2 (DN 50): 84 inches with 3/8-inch rod.
2. NPS 3 (DN 80): 96 inches with 1/2-inch rod.
3. NPS 4 (DN 100): 108 inches with 1/2-inch rod.
4. NPS 6 (DN 150): 10 feet with 5/8-inch rod.

K. Install supports for vertical stainless-steel piping every 10 feet.

L. Install hangers for copper tubing with the following maximum horizontal spacing and minimum rod diameters:

1. NPS 1-1/4 (DN 32): 72 inches with 3/8-inch rod.
2. NPS 1-1/2 and NPS 2 (DN 40 and DN 50): 96 inches with 3/8-inch rod.
3. NPS 2-1/2 (DN 65): 108 inches with 1/2-inch rod.
4. NPS 3 to NPS 5 (DN 80 to DN 125): 10 feet with 1/2-inch rod.
5. NPS 6 (DN 150): 10 feet with 5/8-inch rod.

M. Install supports for vertical copper tubing every 10 feet.

N. Support piping and tubing not listed above according to MSS SP-69 and manufacturer's written instructions.

3.7 CONNECTIONS

A. Drawings indicate general arrangement of piping, fittings, and specialties.

B. Connect soil and waste piping to exterior sanitary sewerage piping. Use transition fitting to join dissimilar piping materials.

C. Connect drainage and vent piping to the following:

1. Plumbing Fixtures: Connect drainage piping in sizes indicated, but not smaller than required by plumbing code.
2. Plumbing Fixtures and Equipment: Connect atmospheric vent piping in sizes indicated, but not smaller than required by authorities having jurisdiction.
3. Plumbing Specialties: Connect drainage and vent piping in sizes indicated, but not smaller than required by plumbing code.
4. Equipment: Connect drainage piping as indicated. Provide shutoff valve, if indicated, and union for each connection. Use flanges instead of unions for connections NPS 2-1/2 (DN 65) and larger.

3.8 FIELD QUALITY CONTROL

A. During installation, notify authorities having jurisdiction at least 24 hours before inspection must be made. Perform tests specified below in presence of authorities having jurisdiction.

1. Roughing-in Inspection: Arrange for inspection of piping before concealing or closing-in after roughing-in and before setting fixtures.
2. Final Inspection: Arrange for final inspection by authorities having jurisdiction to observe tests specified below and to ensure compliance with requirements.

B. Reinspection: If authorities having jurisdiction find that piping will not pass test or inspection, make required corrections and arrange for reinspection.

C. Reports: Prepare inspection reports and have them signed by authorities having jurisdiction.

D. Test sanitary drainage and vent piping according to procedures of authorities having jurisdiction or, in absence of published procedures, as follows:

1. Test for leaks and defects in new piping and parts of existing piping that have been altered, extended, or repaired. If testing is performed in segments, submit separate report for each test, complete with diagram of portion of piping tested.
2. Leave uncovered and unconcealed new, altered, extended, or replaced drainage and vent piping until it has been tested and approved. Expose work that was covered or concealed before it was tested.
3. Roughing-in Plumbing Test Procedure: Test drainage and vent piping, except outside leaders, on completion of roughing-in. Close openings in piping system and fill with water to point of overflow, but not less than 10-foot head of water. From 15 minutes before inspection starts to completion of inspection, water level must not drop. Inspect joints for leaks.
4. Finished Plumbing Test Procedure: After plumbing fixtures have been set and traps filled with water, test connections and prove they are gastight and watertight. Plug vent-stack openings on roof and building drains where they leave building. Introduce air into piping system equal to pressure of 1-inch wg. Use U-tube or manometer inserted in trap of water closet to measure this pressure. Air pressure must remain constant without introducing additional air throughout period of inspection. Inspect plumbing fixture connections for gas and water leaks.
5. Repair leaks and defects with new materials and retest piping, or portion thereof, until satisfactory results are obtained.
6. Prepare reports for tests and required corrective action.

3.9 CLEANING

A. Clean interior of piping. Remove dirt and debris as work progresses.

B. Protect drains during remainder of construction period to avoid clogging with dirt and debris and to prevent damage from traffic and construction work.

C. Place plugs in ends of uncompleted piping at end of day and when work stops.

END OF SECTION 221316

SECTION 221319 - SANITARY WASTE PIPING SPECIALTIES

PART 1 - GENERAL

1.1 RELATED DOCUMENTS

A. Drawings and general provisions of the Contract, including General and Supplementary Conditions and Division 1 Specification Sections, apply to this Section.

1.2 SUMMARY

A. This Section includes the following drainage piping specialties:

1. Cleanouts.
2. Floor drains.
3. Miscellaneous drainage piping specialties.

1.3 SUBMITTALS

A. Shop Drawings: Show fabrication and installation details for frost-resistant vent terminals.

1. Wiring Diagrams: Power, signal, and control wiring.

B. Field quality-control test reports.

C. Operation and Maintenance Data: For drainage piping specialties to include in emergency, operation, and maintenance manuals.

1.4 QUALITY ASSURANCE

A. Drainage piping specialties shall bear label, stamp, or other markings of specified testing agency.

B. Electrical Components, Devices, and Accessories: Listed and labeled as defined in NFPA 70, Article 100, by a testing agency acceptable to authorities having jurisdiction, and marked for intended use.

1.5 COORDINATION

A. Coordinate size and location of concrete bases. Cast anchor-bolt inserts into bases. Concrete, reinforcement, and formwork requirements are specified in Division 3.

B. Coordinate size and location of roof penetrations.

PART 2 - PRODUCTS

2.1 CLEANOUTS

A. Metal Floor Cleanouts:

1. Available Manufacturers: Subject to compliance with requirements, manufacturers offering products that may be incorporated into the Work include, but are not limited to, the following:
2. Manufacturers: Subject to compliance with requirements, provide products by one of the following:
3. Basis-of-Design Product: Subject to compliance with requirements, provide the product indicated or a comparable product by one of the following:
   a. MIFAB, Inc.
   b. Smith, Jay R. Mfg. Co.; Division of Smith Industries, Inc.
   c. Tyler Pipe; Wade Div.
   d. Watts Drainage Products Inc.
   e. Or Approved Equal.

B. Stainless Steel Wall Cleanouts:

1. Available Manufacturers: Subject to compliance with requirements, manufacturers offering products that may be incorporated into the Work include, but are not limited to, the following:
2. Manufacturers: Subject to compliance with requirements, provide products by one of the following:
3. Basis-of-Design Product: Subject to compliance with requirements, provide the product indicated or a comparable product by one of the following:
   a. MIFAB, Inc.
   b. Smith, Jay R. Mfg. Co.; Division of Smith Industries, Inc.
   c. Tyler Pipe; Wade Div.
   d. Watts Drainage Products Inc.
   e. Or Approved Equal.

2.2 FLOOR DRAINS

A. Cast-Iron Floor Drains:

1. Available Manufacturers: Subject to compliance with requirements, manufacturers offering products that may be incorporated into the Work include, but are not limited to, the following:
2. Manufacturers: Subject to compliance with requirements, provide products by one of the following:
3. Basis-of-Design Product: Subject to compliance with requirements, provide the product indicated or a comparable product by one of the following:
   a. MIFAB, Inc.
   b. Smith, Jay R. Mfg. Co.; Division of Smith Industries, Inc.
   c. Tyler Pipe; Wade Div.
   d. Watts Drainage Products Inc.
   e. Or Approved Equal.

4. Standard: ASME A112.6.3 with backwater valve.

5. Pattern: Floor drain.
6. Outlet: Side.
7. Sediment Bucket: Refer to plumbing schedule.
8. Top or Strainer Material: Nickel Bronze.
9. Top of Body and Strainer Finish: Nickel bronze.
10. Top Shape: Round.

2.3 MISCELLANEOUS DRAINAGE PIPING SPECIALTIES

A. Open Drains:

1. Description: Shop or field fabricate from ASTM A 74, Service class, hub-and-spigot, cast-iron, soil-pipe fittings. Include P-trap, hub-and-spigot riser section; and where required, increaser fitting joined with ASTM C 564, rubber gaskets.
2. Size: Same as connected waste piping [with increaser fitting of size indicated].

B. Deep-Seal Traps:

1. Description: Cast-iron or bronze casting, with inlet and outlet matching connected piping and cleanout trap-seal primer valve connection.
2. Size: Same as connected waste piping.
   a. NPS 2 (DN 50): 4-inch minimum water seal.
   b. NPS 2-1/2 (DN 65) and Larger: 5-inch minimum water seal.

C. Floor-Drain, Trap-Seal Primer Fittings:

1. Description: Cast iron, with threaded inlet and threaded or spigot outlet, and trap-seal primer valve connection.
2. Size: Same as floor drain outlet with NPS 1/2 (DN 15) side inlet.

D. Air-Gap Fittings:

1. Standard: ASME A112.1.2, for fitting designed to ensure fixed, positive air gap between installed inlet and outlet piping.
2. Body: Bronze or cast iron.
3. Inlet: Opening in top of body.
4. Outlet: Larger than inlet.
5. Size: Same as connected waste piping and with inlet large enough for associated indirect waste piping.

E. Sleeve Flashing Device:

1. Description: Manufactured, cast-iron fitting, with clamping device, that forms sleeve for pipe floor penetrations of floor membrane. Include galvanized-steel pipe extension in top of fitting that will extend [1 inch (25 mm)] [2 inches (51 mm)] <Insert dimension> above finished floor and galvanized-steel pipe extension in bottom of fitting that will extend through floor slab.
2. Size: As required for close fit to riser or stack piping.

F. Stack Flashing Fittings:

1. Description: Counterflashing-type, cast-iron fitting, with bottom recess for terminating roof membrane, and with threaded or hub top for extending vent pipe.
2. Size: Same as connected stack vent or vent stack.

G. Vent Caps:

1. Description: Cast-iron body with threaded or hub inlet and vandal-proof design. Include vented hood and setscrews to secure to vent pipe.
2. Size: Same as connected stack vent or vent stack.

H. Frost-Resistant Vent Terminals:

1. Description: Manufactured or shop-fabricated assembly constructed of copper, lead-coated copper, or galvanized steel.
2. Design: To provide 1-inch (25-mm) enclosed air space between outside of pipe and inside of flashing collar extension, with counterflashing.

I. Expansion Joints:

1. Standard: ASME A112.21.2M.
2. Body: Cast iron with bronze sleeve, packing, and gland.
3. End Connections: Matching connected piping.
4. Size: Same as connected soil, waste, or vent piping.

2.4 FLASHING MATERIALS

A. Lead Sheet: ASTM B 749, Type L51121, copper bearing, with the following minimum weights and thicknesses, unless otherwise indicated:

1. General Use: 4.0-lb/sq. ft., 0.0625-inch thickness.
2. Vent Pipe Flashing: 3.0-lb/sq. ft., 0.0469-inch thickness.
3. Burning: 6-lb/sq. ft., 0.0938-inch thickness.

B. Copper Sheet: ASTM B 152/B 152M, of the following minimum weights and thicknesses, unless otherwise indicated:

1. General Applications: 12 oz./sq. ft.
2. Vent Pipe Flashing: 8 oz./sq. ft.

C. Zinc-Coated Steel Sheet: ASTM A 653/A 653M, with 0.20 percent copper content and 0.04-inch minimum thickness, unless otherwise indicated. Include G90 (Z275) hot-dip galvanized, mill-phosphatized finish for painting if indicated.

D. Elastic Membrane Sheet: ASTM D 4068, flexible, chlorinated polyethylene, 40-mil minimum thickness.

E. Fasteners: Metal compatible with material and substrate being fastened.

F. Metal Accessories: Sheet metal strips, clamps, anchoring devices, and similar accessory units required for installation; matching or compatible with material being installed.

G. Solder: ASTM B 32, lead-free alloy.

H. Bituminous Coating: SSPC-Paint 12, solvent-type, bituminous mastic.

PART 3 - EXECUTION

3.1 INSTALLATION

A. Refer to Division 22 Section "Basic Mechanical Materials and Methods" for piping joining materials, joint construction, and basic installation requirements.

3.2 CONNECTIONS

A. Piping installation requirements are specified in other Division 22 Sections. Drawings indicate general arrangement of piping, fittings, and specialties.

B. Install piping adjacent to equipment to allow service and maintenance.

3.3 PROTECTION

A. Protect drains during remainder of construction period to avoid clogging with dirt or debris and to prevent damage from traffic or construction work.

B. Place plugs in ends of uncompleted piping at end of each day or when work stops.

END OF SECTION 221319

SECTION 221413 - FACILITY STORM DRAINAGE PIPING

PART 1 - GENERAL

1.1 RELATED DOCUMENTS

A. Drawings and general provisions of the Contract, including General and Supplementary Conditions and Division 1 Specification Sections, apply to this Section.

1.2 SUMMARY

A. This Section includes the following storm drainage piping inside the building:

1. Pipe, tube, and fittings.
2. Special pipe fittings.
3. Encasement for underground metal piping.

1.3 DEFINITIONS

A. ABS: Acrylonitrile-butadiene-styrene plastic.

B. LLDPE: Linear, low-density polyethylene plastic.

C. PE: Polyethylene plastic.

D. PVC: Polyvinyl chloride plastic.

E. TPE: Thermoplastic elastomer.

1.4 PERFORMANCE REQUIREMENTS

A. Components and installation shall be capable of withstanding the following minimum working-pressure, unless otherwise indicated:

1. Storm Drainage Piping: 80 psig.

B. Seismic Performance: Soil, waste, and vent piping and support and installation shall be capable of withstanding the effects of seismic events determined according to ASCE 7, "Minimum Design Loads for Buildings and Other Structures."

1.5 SUBMITTALS

A. Product Data: For pipe, tube, fittings, and couplings.

B. Shop Drawings:

1. Design Calculations: Signed and sealed by a qualified professional engineer for selecting seismic restraints.
2. Controlled-Flow Storm Drainage System: Include calculations, plans, and details.

C. Field quality-control inspection and test reports.

1.6 QUALITY ASSURANCE

A. Piping materials shall bear label, stamp, or other markings of specified testing agency.

B. Comply with NSF 14, "Plastics Piping Systems Components and Related Materials," for plastic piping components. Include marking with "NSF-drain" for plastic drain piping and "NSF-sewer" for plastic sewer piping.

PART 2 - PRODUCTS

2.1 MANUFACTURERS

A. In other Part 2 articles where titles below introduce lists, the following requirements apply to product selection:

1. Available Manufacturers: Subject to compliance with requirements, manufacturers offering products that may be incorporated into the Work include, but are not limited to, manufacturers specified.
2. Manufacturers: Subject to compliance with requirements, provide products by one of the manufacturers specified.

2.2 PIPING MATERIALS

A. Refer to Part 3 "Piping Applications" Article for applications of pipe, tube, fitting, and joining materials.

2.3 PVC PIPE AND FITTINGS

A. Solid-Wall PVC Pipe: ASTM D 2665, drain, waste, and vent.

B. Cellular-Core PVC Pipe: ASTM F 891, Schedule 40.

C. PVC Socket Fittings: ASTM D 2665, made to ASTM D 3311, drain, waste, and vent patterns and to fit Schedule 40 pipe.

D. Adhesive Primer: ASTM F 656.

1. Adhesive primer shall have a VOC content of 550 g/L or less when calculated according to 40 CFR 59, Subpart D (EPA Method 24).
2. Adhesive primer shall comply with the testing and product requirements of the California Department of Health Services' "Standard Practice for the Testing of Volatile Organic Emissions from Various Sources Using Small-Scale Environmental Chambers."

E. Solvent Cement: ASTM D 2564.

1. PVC solvent cement shall have a VOC content of 510 g/L or less when calculated according to 40 CFR 59, Subpart D (EPA Method 24).
2. Solvent cement shall comply with the testing and product requirements of the California Department of Health Services' "Standard Practice for the Testing of Volatile Organic Emissions from Various Sources Using Small-Scale Environmental Chambers."

PART 3 - EXECUTION

3.1 EXCAVATION

A. Refer to Division 2 Section "Earthwork" for excavating, trenching, and backfilling.

3.2 PIPING APPLICATIONS

A. Flanges and unions may be used on aboveground pressure piping, unless otherwise indicated.

B. Aboveground and underground storm drainage piping shall be:

1. Solid-wall Schedule 40 PVC pipe with primed and cemented socket fittings.

3.3 PIPING INSTALLATION

A. Storm sewer and drainage piping outside the building are specified in Division 2 Section "Storm Drainage."

B. Basic piping installation requirements are specified in Division 15 Section "Basic Mechanical Materials and Methods."

C. Install cleanouts at grade and extend to where building storm drains connect to building storm sewers. Cleanouts are specified in Division 15 Section "Plumbing Specialties."

D. Install cleanout fitting with closure plug inside the building in storm drainage force-main piping.

E. Install cast-iron sleeve with water stop and mechanical sleeve seal at each service pipe penetration through foundation wall. Select number of interlocking rubber links required to make installation watertight. Sleeves and mechanical sleeve seals are specified in Division 15 Section "Basic Mechanical Materials and Methods."

F. Install wall-penetration fitting system at each service pipe penetration through foundation wall. Make installation watertight.

G. Make changes in direction for storm drainage piping using appropriate branches, bends, and long-sweep bends. Do not change direction of flow more than 90 degrees. Use proper size of standard increasers and reducers if pipes of different sizes are connected. Reducing size of drainage piping in direction of flow is prohibited.

H. Lay buried building storm drainage piping beginning at low point of each system. Install true to grades and alignment indicated, with unbroken continuity of invert. Place hub ends of piping upstream. Install required gaskets according to manufacturer's written instructions for use of lubricants, cements, and other installation requirements. Maintain swab in piping and pull past each joint as completed.

I. Install storm drainage piping at the following minimum slopes, unless otherwise indicated:

1. Building Storm Drain: 1 percent downward in direction of flow for piping NPS 3 (DN 80) and smaller; 1 percent downward in direction of flow for piping NPS 4 (DN 100) and larger.
2. Horizontal Storm-Drainage Piping: 2 percent downward in direction of flow.

J. Install engineered controlled-flow storm drainage piping in locations indicated.

K. Do not enclose, cover, or put piping into operation until it is inspected and approved by authorities having jurisdiction.

3.4 VALVE INSTALLATION

A. General valve installation requirements are specified in Division 15 Section "Valves."

3.5 HANGER AND SUPPORT INSTALLATION

A. Pipe hangers and supports are specified in Division 15 Section "Hangers and Supports." Install the following:

1. Vertical Piping: MSS Type 8 or Type 42, clamps.
2. Individual, Straight, Horizontal Piping Runs: According to the following:
   a. 100 Feet and Less: MSS Type 1, adjustable, steel clevis hangers.
   b. Longer Than 100 Feet: MSS Type 43, adjustable roller hangers.
   c. Longer Than 100 Feet, if Indicated: MSS Type 49, spring cushion rolls.
3. Multiple, Straight, Horizontal Piping Runs 100 Feet or Longer: MSS Type 44, pipe rolls. Support pipe rolls on trapeze.
4. Base of Vertical Piping: MSS Type 52, spring hangers.

B. Install supports according to Division 15 Section "Hangers and Supports."

C. Support vertical piping and tubing at base and at each floor.

D. Rod diameter may be reduced 1 size for double-rod hangers, with 3/8-inch minimum rods.

E. Install hangers for cast-iron soil piping with the following maximum horizontal spacing and minimum rod diameters:

1. NPS 1-1/2 and NPS 2 (DN 40 and DN 50): 60 inches with 3/8-inch rod.
2. NPS 3 (DN 80): 60 inches with 1/2-inch rod.
3. NPS 4 and NPS 5 (DN 100 and DN 125): 60 inches with 5/8-inch rod.
4. NPS 6 (DN 150): 60 inches with 3/4-inch rod.

5. NPS 8 to NPS 12 (DN 200 to DN 300): 60 inches with 7/8-inch rod.

F. Install supports for vertical cast-iron soil piping every 15 feet.

3.6 CONNECTIONS

A. Drawings indicate general arrangement of piping, fittings, and specialties.

B. Connect interior storm drainage piping to exterior storm drainage piping. Use transition fitting to join dissimilar piping materials.

C. Connect storm drainage piping to roof drains and storm drainage specialties.

3.7 FIELD QUALITY CONTROL

A. During installation, notify authorities having jurisdiction at least 24 hours before inspection must be made. Perform tests specified below in presence of authorities having jurisdiction.

1. Roughing-in Inspection: Arrange for inspection of piping before concealing or closing-in after roughing-in.
2. Final Inspection: Arrange for final inspection by authorities having jurisdiction to observe tests specified below and to ensure compliance with requirements.

B. Reinspection: If authorities having jurisdiction find that piping will not pass test or inspection, make required corrections and arrange for reinspection.

C. Reports: Prepare inspection reports and have them signed by authorities having jurisdiction.

D. Test storm drainage piping according to procedures of authorities having jurisdiction or, in absence of published procedures, as follows:

1. Test for leaks and defects in new piping and parts of existing piping that have been altered, extended, or repaired. If testing is performed in segments, submit separate report for each test, complete with diagram of portion of piping tested.
2. Leave uncovered and unconcealed new, altered, extended, or replaced storm drainage piping until it has been tested and approved. Expose work that was covered or concealed before it was tested.
3. Test Procedure: Test storm drainage piping, except outside leaders, on completion of roughing-in. Close openings in piping system and fill with water to point of overflow, but not less than 10-foot head of water. From 15 minutes before inspection starts to completion of inspection, water level must not drop. Inspect joints for leaks.
4. Repair leaks and defects with new materials and retest piping, or portion thereof, until satisfactory results are obtained.
5. Prepare reports for tests and required corrective action.

3.8 CLEANING

A. Clean interior of piping. Remove dirt and debris as work progresses.

B. Protect drains during remainder of construction period to avoid clogging with dirt and debris and to prevent damage from traffic and construction work.

C. Place plugs in ends of uncompleted piping at end of day and when work stops.

END OF SECTION 221413

SECTION 221423 - STORM DRAINAGE PIPING SPECIALTIES

PART 1 - GENERAL

1.1 RELATED DOCUMENTS

A. Drawings and general provisions of the Contract, including General and Supplementary Conditions and Division 01 Specification Sections, apply to this Section.

1.2 SUMMARY

A. This Section includes the following drainage piping specialties:

1. Cleanouts.
2. Floor drains.
3. Miscellaneous drainage piping specialties.

1.3 DEFINITIONS

A. ABS: Acrylonitrile-butadiene-styrene plastic.

B. FOG: Fats, oils, and grease.

C. FRP: Fiberglass-reinforced plastic.

D. HDPE: High-density polyethylene plastic.

E. PE: Polyethylene plastic.

F. PP: Polypropylene plastic.

G. PUR: Polyurethane plastic.

H. PVC: Polyvinyl chloride plastic.

1.4 SUBMITTALS

A. Shop Drawings: Show fabrication and installation details for frost-resistant vent terminals.

1. Wiring Diagrams: Power, signal, and control wiring.

B. Manufacturer Seismic Qualification Certification: Submit certification that all accessories, and components will withstand seismic forces defined in Division 22 Section "Mechanical Vibration and Seismic Controls." Include the following:

1. Basis for Certification: Indicate whether withstand certification is based on actual test of assembled components or on calculation.

a. The term "withstand" means "the unit will remain in place without separation of any parts from the device when subjected to the seismic forces specified and the unit will be fully operational after the seismic event."

2. Dimensioned Outline Drawings of Equipment Unit: Identify center of gravity and locate and describe mounting and anchorage provisions.

3. Detailed description of equipment anchorage devices on which the certification is based and their installation requirements.

C. Field quality-control test reports.

D. Operation and Maintenance Data: For drainage piping specialties to include in emergency, operation, and maintenance manuals.

1.5 QUALITY ASSURANCE

A. Drainage piping specialties shall bear label, stamp, or other markings of specified testing agency.

B. Electrical Components, Devices, and Accessories: Listed and labeled as defined in NFPA 70, Article 100, by a testing agency acceptable to authorities having jurisdiction, and marked for intended use.

C. Comply with NSF 14, "Plastics Piping Components and Related Materials," for plastic sanitary and storm piping specialty components.

1.6 COORDINATION

A. Coordinate size and location of concrete bases. Cast anchor-bolt inserts into bases. Concrete, reinforcement, and formwork requirements are specified in Division 3.

B. Coordinate size and location of roof penetrations.

1.7 EXTRA MATERIALS

A. Furnish extra materials described below that match products installed and that are packaged with protective covering for storage and identified with labels describing contents.

1. Cultures: Provide 1-gal. bottles of bacteria culture recommended by manufacturer of FOG disposal systems equal to 200 percent of amount installed, but no fewer than 2 1-gal. bottles.

PART 2 - PRODUCTS

2.1 CLEANOUTS

A. Metal Floor Cleanouts:

1. Available Manufacturers: Subject to compliance with requirements, manufacturers offering products that may be incorporated into the Work include, but are not limited to, the following:
2. Manufacturers: Subject to compliance with requirements, provide products by one of the following:
3. Basis-of-Design Product: Subject to compliance with requirements, provide the product indicated or a comparable product by one of the following:
    a. MIFAB, Inc.
    b. Smith, Jay R. Mfg. Co.; Division of Smith Industries, Inc.
    c. Tyler Pipe; Wade Div.
    d. Watts Drainage Products Inc.
    e. Or approved equal.

B. Stainless Steel Wall Cleanouts:

1. Available Manufacturers: Subject to compliance with requirements, manufacturers offering products that may be incorporated into the Work include, but are not limited to, the following:
2. Manufacturers: Subject to compliance with requirements, provide products by one of the following:
3. Basis-of-Design Product: Subject to compliance with requirements, provide the product indicated or a comparable product by one of the following:
    a. MIFAB, Inc.
    b. Smith, Jay R. Mfg. Co.; Division of Smith Industries, Inc.
    c. Tyler Pipe; Wade Div.
    d. Watts Drainage Products Inc.
    e. Or approved equal.

2.2 FLOOR DRAINS

A. Cast-Iron Floor Drains:

1. Available Manufacturers: Subject to compliance with requirements, manufacturers offering products that may be incorporated into the Work include, but are not limited to, the following:
2. Manufacturers: Subject to compliance with requirements, provide products by one of the following:
3. Basis-of-Design Product: Subject to compliance with requirements, provide the product indicated or a comparable product by one of the following:
    a. MIFAB, Inc.
    b. Smith, Jay R. Mfg. Co.; Division of Smith Industries, Inc.
    c. Tyler Pipe; Wade Div.
    d. Watts Drainage Products Inc.
    e. Or approved equal.
4. Standard: ASME A112.6.3 with backwater valve.
5. Pattern: Floor drain.
6. Outlet: Side.
7. Sediment Bucket: Refer to plumbing schedule.
8. Top or Strainer Material: Bronze.
9. Top of Body and Strainer Finish: Nickel bronze.
10. Top Shape: Round.

2.3 MISCELLANEOUS DRAINAGE PIPING SPECIALTIES

A. Open Drains:

1. Description: Shop or field fabricate from ASTM A 74, Service class, hub-and-spigot, cast-iron, soil-pipe fittings. Include P-trap, hub-and-spigot riser section; and where required, increaser fitting joined with ASTM C 564, rubber gaskets.
2. Size: Same as connected waste piping [with increaser fitting of size indicated].

B. Deep-Seal Traps:

1. Description: Cast-iron or bronze casting, with inlet and outlet matching connected piping and cleanout trap-seal primer valve connection.
2. Size: Same as connected waste piping.
   a. NPS 2 (DN 50): 4-inch minimum water seal.
   b. NPS 2-1/2 (DN 65) and Larger: 5-inch minimum water seal.

C. Floor-Drain, Trap-Seal Primer Fittings:

1. Description: Cast iron, with threaded inlet and threaded or spigot outlet, and trap-seal primer valve connection.
2. Size: Same as floor drain outlet with NPS 1/2 (DN 15) side inlet.

D. Air-Gap Fittings:

1. Standard: ASME A112.1.2, for fitting designed to ensure fixed, positive air gap between installed inlet and outlet piping.
2. Body: Bronze or cast iron.
3. Inlet: Opening in top of body.
4. Outlet: Larger than inlet.
5. Size: Same as connected waste piping and with inlet large enough for associated indirect waste piping.

E. Sleeve Flashing Device:

1. Description: Manufactured, cast-iron fitting, with clamping device, that forms sleeve for pipe floor penetrations of floor membrane. Include galvanized-steel pipe extension in top of fitting that will extend [1 inch (25 mm)] [2 inches (51 mm)] <Insert dimension> above finished floor and galvanized-steel pipe extension in bottom of fitting that will extend through floor slab.
2. Size: As required for close fit to riser or stack piping.

F. Stack Flashing Fittings:

1. Description: Counterflashing-type, cast-iron fitting, with bottom recess for terminating roof membrane, and with threaded or hub top for extending vent pipe.
2. Size: Same as connected stack vent or vent stack.

G. Vent Caps:

1. Description: Cast-iron body with threaded or hub inlet and vandal-proof design. Include vented hood and setscrews to secure to vent pipe.
2. Size: Same as connected stack vent or vent stack.

H. Frost-Resistant Vent Terminals:

1. Description: Manufactured or shop-fabricated assembly constructed of copper, lead-coated copper, or galvanized steel.
2. Design: To provide 1-inch (25-mm) enclosed air space between outside of pipe and inside of flashing collar extension, with counterflashing.

I. Expansion Joints:

1. Standard: ASME A112.21.2M.
2. Body: Cast iron with bronze sleeve, packing, and gland.
3. End Connections: Matching connected piping.
4. Size: Same as connected soil, waste, or vent piping.

J. Downspout Boots:

1. Description: Manufactured, ASTM A 48/A 48M, gray-iron casting, with strap or ears for attaching to building; NPS 4 (DN 100) outlet; and shop-applied bituminous coating.
2. Size: Inlet size to match downspout.
3. Description: ASTM A 74, Service class, hub-and-spigot, cast-iron soil pipe.
4. Size: Same as or larger than connected downspout.

K. Conductor Nozzles:

1. Description: Bronze body with threaded inlet and bronze wall flange with mounting holes.
2. Size: Same as connected conductor.

2.4 FLASHING MATERIALS

A. Lead Sheet: ASTM B 749, Type L51121, copper bearing, with the following minimum weights and thicknesses, unless otherwise indicated:

1. General Use: 4.0-lb/sq. ft., 0.0625-inch thickness.
2. Vent Pipe Flashing: 3.0-lb/sq. ft., 0.0469-inch thickness.
3. Burning: 6-lb/sq. ft., 0.0938-inch thickness.

B. Copper Sheet: ASTM B 152/B 152M, of the following minimum weights and thicknesses, unless otherwise indicated:

1. General Applications: 12 oz./sq. ft.
2. Vent Pipe Flashing: 8 oz./sq. ft.

C. Zinc-Coated Steel Sheet: ASTM A 653/A 653M, with 0.20 percent copper content and 0.04-inch minimum thickness, unless otherwise indicated. Include G90 (Z275) hot-dip galvanized, mill-phosphatized finish for painting if indicated.

D. Elastic Membrane Sheet: ASTM D 4068, flexible, chlorinated polyethylene, 40-mil minimum thickness.

E. Fasteners: Metal compatible with material and substrate being fastened.

F. Metal Accessories: Sheet metal strips, clamps, anchoring devices, and similar accessory units required for installation; matching or compatible with material being installed.

G. Solder: ASTM B 32, lead-free alloy.

H. Bituminous Coating: SSPC-Paint 12, solvent-type, bituminous mastic.

PART 3 - EXECUTION

3.1 INSTALLATION

A. Refer to Division 22 Section "Basic Mechanical Materials and Methods" for piping joining materials, joint construction, and basic installation requirements.

3.2 CONNECTIONS

A. Piping installation requirements are specified in other Division 22 Sections. Drawings indicate general arrangement of piping, fittings, and specialties.

B. Install piping adjacent to equipment to allow service and maintenance.

3.3 PROTECTION

A. Protect drains during remainder of construction period to avoid clogging with dirt or debris and to prevent damage from traffic or construction work.

B. Place plugs in ends of uncompleted piping at end of each day or when work stops.

END OF SECTION 221423

SECTION 224213 - PLUMBING FIXTURES

PART 1 - GENERAL

1.1 SUMMARY

A. This Section includes the following conventional plumbing fixtures and related components:

1. Faucets for lavatories and sinks.
2. Flushometers.
3. Toilet seats.
4. Fixture supports.
5. Water closets.
6. Lavatories.
7. Urinals.

1.2 DEFINITIONS

A. Accessible Fixture: Plumbing fixture that can be approached, entered, and used by people with disabilities.

B. Fitting: Device that controls the flow of water into or out of the plumbing fixture. Fittings specified in this Section include supplies and stops, faucets and spouts, shower heads and tub spouts, drains and tailpieces, and traps and waste pipes. Piping and general-duty valves are included where indicated.

C. Solid Surface: Nonporous, homogeneous, cast-polymer-plastic material with heat-, impact-, scratch-, and stain-resistance qualities.

1.3 SUBMITTALS

A. Product Data: For each type of plumbing fixture indicated. Include selected fixture and trim, fittings, accessories, appliances, appurtenances, equipment, and supports. Indicate materials and finishes, dimensions, construction details, and flow-control rates.

B. Shop Drawings: Diagram power, signal, and control wiring.

C. Operation and Maintenance Data: For plumbing fixtures to include in emergency, operation, and maintenance manuals.

D. Warranty: Special warranty specified in this Section.

1.4 QUALITY ASSURANCE

A. Source Limitations: Obtain plumbing fixtures, faucets, and other components of each category through one source from a single manufacturer.

1. Exception: If fixtures, faucets, or other components are not available from a single manufacturer, obtain similar products from other manufacturers specified for that category.

B. Electrical Components, Devices, and Accessories: Listed and labeled as defined in NFPA 70, Article 100, by a testing agency acceptable to authorities having jurisdiction, and marked for intended use.

C. Regulatory Requirements: Comply with requirements in ICC A117.1 – 1998 or most current edition, "Accessible and Usable Buildings and Facilities"; Public Law 90-480, "Architectural Barriers Act"; and Public Law 101-336, "Americans with Disabilities Act"; for plumbing fixtures for people with disabilities.

D. Regulatory Requirements: Comply with requirements in Public Law 102-486, "Energy Policy Act," about water flow and consumption rates for plumbing fixtures.

E. NSF Standard: Comply with NSF 61, "Drinking Water System Components--Health Effects," for fixture materials that will be in contact with potable water.

F. Select combinations of fixtures and trim, faucets, fittings, and other components that are compatible.

G. Comply with the following applicable standards and other requirements specified for plumbing fixtures:

1. Enameled, Cast-Iron Fixtures: ASME A112.19.1M.
2. Porcelain-Enameled, Formed-Steel Fixtures: ASME A112.19.4M.
3. Slip-Resistant Bathing Surfaces: ASTM F 462.
4. Solid-Surface-Material Lavatories and Sinks: ANSI/ICPA SS-1.
5. Stainless-Steel Commercial, Handwash Sinks: NSF 2 construction.
6. Vitreous-China Fixtures: ASME A112.19.2M.
7. Water-Closet, Flush Valve, Tank Trim: ASME A112.19.5.
8. Water-Closet, Flushometer Tank Trim: ASSE 1037.

H. Comply with the following applicable standards and other requirements specified for lavatory and sink faucets:

1. Backflow Protection Devices for Faucets with Side Spray: ASME A112.18.3M.
2. Backflow Protection Devices for Faucets with Hose-Thread Outlet: ASME A112.18.3M.
3. Diverter Valves for Faucets with Hose Spray: ASSE 1025.
4. Faucets: ASME A112.18.1.
5. Hose-Connection Vacuum Breakers: ASSE 1011.
6. Hose-Coupling Threads: ASME B1.20.7.
7. Integral, Atmospheric Vacuum Breakers: ASSE 1001.
8. NSF Potable-Water Materials: NSF 61.
9. Pipe Threads: ASME B1.20.1.
10. Sensor-Actuated Faucets and Electrical Devices: UL 1951.
11. Supply Fittings: ASME A112.18.1.
12. Brass Waste Fittings: ASME A112.18.2.

I. Comply with the following applicable standards and other requirements specified for miscellaneous fittings:

1. Atmospheric Vacuum Breakers: ASSE 1001.
2. Brass and Copper Supplies: ASME A112.18.1.
3. Dishwasher Air-Gap Fittings: ASSE 1021.
4. Manual-Operation Flushometers: ASSE 1037.
5. Brass Waste Fittings: ASME A112.18.2.

6. Sensor-Operation Flushometers: ASSE 1037 and UL 1951.

J. Comply with the following applicable standards and other requirements specified for miscellaneous components:

1. Dishwasher Air-Gap Fittings: ASSE 1021.
2. Flexible Water Connectors: ASME A112.18.6.
3. Floor Drains: ASME A112.6.3.
4. Grab Bars: ASTM F 446.
5. Hose-Coupling Threads: ASME B1.20.7.
6. Off-Floor Fixture Supports: ASME A112.6.1M.
7. Pipe Threads: ASME B1.20.1.
8. Plastic Toilet Seats: ANSI Z124.5.
9. Supply and Drain Protective Shielding Guards: ICC A117.1.

1.5 WARRANTY

A. Special Warranties: Manufacturer's standard form in which manufacturer agrees to repair or replace components of whirlpools that fail in materials or workmanship within specified warranty period.

1. Failures include, but are not limited to, the following:
   a. Structural failures of unit shell.
   b. Faulty operation of controls, blowers, pumps, heaters, and timers.
   c. Deterioration of metals, metal finishes, and other materials beyond normal use.
2. Warranty Period for Commercial Applications: One (1) year from date of Substantial Completion.

PART 2 - PRODUCTS

2.1 LAVATORY FAUCETS (Refer to plumbing schedule)

1. Basis-of-Design Product: Subject to compliance with requirements, provide the product indicated on drawings or a comparable product by one of the following:

   a. American Standard Companies, Inc.
   b. Chicago Faucets.
   c. Delta Faucet Company.
   d. Elkay Manufacturing Co.
   e. Kohler Co.
   f. Sloan Valve Company.
   g. Or Approved Equal

2.2 SINK FAUCETS (Refer to plumbing schedule)

1. Basis-of-Design Product: Subject to compliance with requirements, provide the product indicated on drawings or a comparable product by one of the following:

   a. American Standard Companies, Inc.
   b. Chicago Faucets.
   c. Delta Faucet Company.
   d. Elkay Manufacturing Co.

e. Kohler Co.
f. Sloan Valve Company.
g. Or Approved Equal

2.3 FLUSHOMETERS (Refer to plumbing schedule)

1. Basis-of-Design Product: Subject to compliance with requirements, provide the product indicated on drawings or a comparable product by one of the following:

   a. Sloan Valve Company
   b. Delta Faucet Company.
   c. American Standard Companies, Inc.
   d. Kohler Co.
   e. Or Approved Equal

2. Description: Flushometer water closets or urinals. Include brass body with corrosion-resistant internal components, control stop with check valve, vacuum breaker, copper or brass tubing, and polished chrome-plated finish on exposed parts.

2.4 TOILET SEATS (Refer to plumbing schedule)

1. Basis-of-Design Product: Subject to compliance with requirements, provide the product indicated on drawings or a comparable product by one of the following:

   a. American Standard Companies, Inc.
   b. Church Seats.
   c. Kohler Co.
   d. Olsonite Corp.
   e. Or Approved Equal

2. Description: Toilet seat for water-closet-type fixture.

   a. Material: Molded, solid plastic with antimicrobial agent.
   b. Configuration: Open front.
   c. Size: Elongated.
   d. Hinge Type: CK, check.
   e. Class: Commercial heavy duty.
   f. Color: White.

2.5 FIXTURE SUPPORTS (Refer to plumbing schedule)

A. Manufacturers: Subject to compliance with requirements, provide products by one of the following:

   1. MIFAB Manufacturing Inc.
   2. Smith, Jay R. Mfg. Co.
   3. Tyler Pipe; Wade Div.
   4. Watts Drainage Products Inc.; a div. of Watts Industries, Inc.
   5. Or Approved Equal

B. Water-Closet Supports:

1. Description: Combination carrier designed for accessible mounting height of wall-mounting, water-closet-type fixture. Include single or double, vertical or horizontal, hub-and-spigot or hubless waste fitting as required for piping arrangement; faceplates; couplings with gaskets; feet; and fixture bolts and hardware matching fixture. Include additional extension coupling, faceplate, and feet for installation in wide pipe space.

C. Lavatory Supports:

1. Description: Type II, lavatory carrier with concealed arms and tie rod for wall-mounting, lavatory-type fixture. Include steel uprights with feet.
2. Accessible-Fixture Support: Include rectangular steel uprights.

2.6 WATER CLOSETS (Refer to plumbing schedule)

1. Basis-of-Design Product: Subject to compliance with requirements, provide the product indicated on drawings or a comparable product by one of the following:

a. American Standard Companies, Inc.
b. Crane Plumbing, L.L.C./Fiat Products.
c. Kohler Co.
d. Or Approved Equal

2.7 LAVATORIES (Refer to plumbing schedule)

1. Basis-of-Design Product: Subject to compliance with requirements, provide the product indicated on drawings or a comparable product by one of the following:

a. Sloan Valve Company
b. Or Approved Equal

2.8 URINALS: (Refer to plumbing schedules)

1. Basis-of-Design Product: Subject to compliance with requirements, provide the product indicated on drawings or a comparable product by one of the following:

a. American Standard Companies, Inc.
b. Crane Plumbing, L.L.C./Fiat Products.
c. Kohler Co.
d. Or Approved Equal

PART 3 - EXECUTION

3.1 EXAMINATION

A. Examine roughing-in of water supply and sanitary drainage and vent piping systems to verify actual locations of piping connections before plumbing fixture installation.

B. Examine cabinets, counters, floors, and walls for suitable conditions where fixtures will be installed.

C. Proceed with installation only after unsatisfactory conditions have been corrected.

3.2 INSTALLATION

A. Assemble plumbing fixtures, trim, fittings, and other components according to manufacturers' written instructions.

B. Install off-floor supports, affixed to building substrate, for wall-mounting fixtures.

1. Use carrier supports with waste fitting and seal for back-outlet fixtures.
2. Use carrier supports without waste fitting for fixtures with tubular waste piping.
3. Use chair-type carrier supports with rectangular steel uprights for accessible fixtures.

C. Install back-outlet, wall-mounting fixtures onto waste fitting seals and attach to supports.

D. Install floor-mounting fixtures on closet flanges or other attachments to piping or building substrate.

E. Install wall-mounting fixtures with tubular waste piping attached to supports.

F. Install floor-mounting, back-outlet water closets attached to building floor substrate and wall bracket and onto waste fitting seals.

G. Install counter-mounting fixtures in and attached to casework.

H. Install fixtures level and plumb according to roughing-in drawings.

I. Install water-supply piping with stop on each supply to each fixture to be connected to water distribution piping. Attach supplies to supports or substrate within pipe spaces behind fixtures. Install stops in locations where they can be easily reached for operation.

1. Exception: Use ball, gate, or globe valves if supply stops are not specified with fixture. Valves are specified in Division 22.

J. Install trap and tubular waste piping on drain outlet of each fixture to be directly connected to sanitary drainage system.

K. Install tubular waste piping on drain outlet of each fixture to be indirectly connected to drainage system.

L. Install flushometer valves for accessible water closets with handle mounted on wide side of compartment. Install other actuators in locations that are easy for people with disabilities to reach.

M. Install toilet seats on water closets.

N. Install faucet-spout fittings with specified flow rates and patterns in faucet spouts if faucets are not available with required rates and patterns. Include adapters if required.

O. Install water-supply flow-control fittings with specified flow rates in fixture supplies at stop valves.

P. Install faucet flow-control fittings with specified flow rates and patterns in faucet spouts if faucets are not available with required rates and patterns. Include adapters if required.

Q. Install traps on fixture outlets.

1. Exception: Omit trap on fixtures with integral traps.
2. Exception: Omit trap on indirect wastes, unless otherwise indicated.

R. Install escutcheons at piping wall ceiling penetrations in exposed, finished locations and within cabinets and millwork. Use deep-pattern escutcheons if required to conceal protruding fittings. Escutcheons are specified in Division 22 Section "Basic Plumbing Materials and Methods."

S. Seal joints between fixtures and walls, floors, and countertops using sanitary-type, one-part, mildew-resistant silicone sealant. Match sealant color to fixture color. Sealants are specified in Division 7 Section "Joint Sealants."

3.3 CONNECTIONS

A. Piping installation requirements are specified in other Division 22. Drawings indicate general arrangement of piping, fittings, and specialties.

B. Connect fixtures with water supplies, stops, and risers, and with traps, soil, waste, and vent piping. Use size fittings required to match fixtures.

C. Ground equipment according to Division 26 Section.

D. Connect wiring according to Division 26.

3.4 FIELD QUALITY CONTROL

A. Verify that installed plumbing fixtures are categories and types specified for locations where installed.

B. Check that plumbing fixtures are complete with trim, faucets, fittings, and other specified components.

C. Inspect installed plumbing fixtures for damage. Replace damaged fixtures and components.

D. Test installed fixtures after water systems are pressurized for proper operation. Replace malfunctioning fixtures and components, then retest. Repeat procedure until units operate properly.

E. Install fresh batteries in sensor-operated mechanisms.

3.5 ADJUSTING

A. Operate and adjust faucets and controls. Replace damaged and malfunctioning fixtures, fittings, and controls.

B. Operate and adjust controls. Replace damaged and malfunctioning units and controls.

C. Adjust water pressure at faucets and flushometer valves to produce proper flow and stream.

D. Replace washers and seals of leaking and dripping faucets and stops.

E. Install fresh batteries in sensor-operated mechanisms.

3.6 CLEANING

A. Clean fixtures, faucets, and other fittings with manufacturers' recommended cleaning methods and materials. Do the following:

1. Remove faucets and strainers, remove sediment and debris, and reinstall strainers and faucets.
2. Remove sediment and debris from drains.

B. After completing installation of exposed, factory-finished fixtures, faucets, and fittings, inspect exposed finishes and repair damaged finishes.

3.7 PROTECTION

A. Provide protective covering for installed fixtures and fittings.

B. Do not allow use of plumbing fixtures for temporary facilities unless approved in writing by Owner.

END OF SECTION 224213

SECTION 230000 – MECHANICAL SUMMARY OF WORK

PART 1 - GENERAL

1.1 RELATED DOCUMENTS

A. Drawings and general provisions of the Contract, including General and Supplementary Conditions, Division 23, and Division 1 Specification Sections, apply to this Section.

1.2 SUMMARY

A. This Section includes the following:

a. Work covered under Mechanical Contract.
b. Work under other contracts.
c. Use of premises.
d. Owner's occupancy requirements.
e. Specification formats and conventions.

B. Related Sections include the following:

a. Division 23 Sections.

1.3 WORK COVERED UNDER MECHANICAL CONTRACT

A. Provide all labor, materials, tools, machinery, equipment, and services necessary to complete the mechanical work under this contract. All systems and equipment shall be complete in every aspect and all items of material, equipment, and labor shall be provided for a fully operational system. Coordinate the work with work of other trades so as to resolve conflicts without impeding job progress. The mechanical work includes the following:

B. MECHANICAL

The mechanical contractor shall furnish all labor, materials, equipment, rigging, appliances, tools and accessories required for providing, installing, connecting and testing the new mechanical system, associated work, controls etc., in accordance with these specifications and the applicable drawings. The work at the two schools include:

a. **For Tatem Elementary school:** Remove existing air handling units as indicated on the plans complete with all ductwork, associated hot water supply and return piping, air registers, insulation, electrical, controls, supports, etc.

b. **For Tatem Elementary school:** Remove existing exhaust fans as indicated on the plans compete with all exhaust ductwork, controls, supports, electrical, etc.

c. **For Tatem Elementary school:** Furnish and install, new indoor/outdoor, packaged HVAC equipment, split system equipment, makeup air units, exhaust, fans, hot water pumps, Unit ventilators, Finned tube radiation, etc. as indicated on the drawings complete with its associated supports, VFD's (where indicated on drawings) vibration isolation, ductwork, gas piping, refrigerant piping, condensate drain piping, insulation of all piping/ductwork, air outlets/inlets, dampers, valves, gauges, controls, etc for a complete operating system. (All

electrical work associated with mechanical/HVAC systems shall be performed by the electrical contractor

d. **For Hopkins Gym and Tatem school:** Furnish and install new Packaged Rooftop unit (DX cooling, gas heating). Complete with all associated 24" high vibration isolation curbs, ductwork, gas piping, condensate drain piping to the nearest roof drain, motorized dampers, volume, dampers, electrical, supports, controls, etc. for a complete operational system.

e. **For Hopkins Gym and Tatem school:** Furnish and install new supply, return, exhaust and transfer air ductwork as indicated on the drawings. All ductwork shall be galvanized steel construction, except the 100% outside air duct system, outdoor air ducts, and exterior mounted ductwork, which shall be aluminum construction. All aluminum construction ductwork shall be SMACNA Class "A" sealed.

f. **For Tatem Elementary school:** Furnish and install new ERV complete with all associated supports, ductwork, condensate drain piping, motorized dampers, volume, dampers, electric duct heater, electrical, supports, etc. for a complete operational system.

g. **For Hopkins Gym and Tatem school:** Furnish and install new split air conditioning units and their respective air-cooled condensing units as indicated on plans, complete with refrigerant piping, condensate drain piping, and all associated supports for a complete operational system.

h. **For Hopkins Gym and Tatem school:** Furnish and install new ceiling fans as indicated on the plans complete with ductwork, backdraft dampers, all associated supports, etc. for a complete operational system.

i. **For Tatem Elementary school:** Furnish new Commercial exhaust hood as indicated on the plans, complete with associated Kitchen exhaust fan and make-up air unit, ductwork, dampers, insulation, controls, hangers, supports, shrouds, etc. for a complete operational system.

j. **For Tatem Elementary school:** Remove existing air devices and all associated ductwork as indicated on the drawings. Install new air devices and associated ductwork in the new ceiling and connect them back into their associated ductwork system.

k. **For Hopkins Gym and Tatem school:** Furnish and install new toilet exhaust fan as indicated on plans, complete with ductwork, backdraft dampers, roof vents, all associated supports, etc. for a complete operational system.

For Hopkins Gym and Tatem Elementary School:

l. Remove all demolished equipment and debris from the site in accordance with all State and Local regulations.

m. All cutting, patching and alterations work shall be coordinated with the owner's use of the space.

n. Minor cutting and patching work.

o. Furnish and install all ancillary equipment needed for a complete and proper installation including, but not limited to anchors, hangers, fittings, strainers, valves, union, etc.

p. All ductwork shall be properly fabricated, installed and supported as per SMACNA and ASHRAE guidelines. Contractor to perform duct leakage testing of entire ductwork.

q. Provide testing, commissioning and start-up reports for all new mechanical/heating/HVAC systems installed in this project.

r. Provide color coded identification tags, identification markers and equipment tags for all equipment including RTUs, ERV units, AC units, ACCUs, fans, piping, ductwork, valves, etc.

s. Provide two-year service for the new HVAC system, from the date of handover of the project to the owner. Submit service reports after each service visit.

t. Furnish and install new air outlets, inlets, transfer grilles of types and quantities as indicated on the drawings. All air outlets/inlets for corridors, kitchen and toilets shall be aluminum construction. Color to be selected by the owner. Furnish and install new supply, return, exhaust and transfer air ductwork as indicated on the drawings. All ductwork shall be galvanized steel construction, except the 100% outside air duct system, outdoor air ducts, and exterior mounted ductwork, which shall be aluminum construction. All aluminum construction ductwork shall be SMACNA Class “A” sealed.

u. All supply, return and outdoor air ductwork shall be internally/externally insulated.

v. Provide high efficiency electric motors for all new units.

w. Furnish and install refrigerant piping and condensate drain piping with insulation, supports, etc.

x. Furnish and install motorized dampers.

y. Furnish and install volume dampers at all supply diffusers, return registers, exhaust registers.

z. Furnish and install fire dampers of suitable rating at all duct penetrations through all rated partitions (chase, wall, floor), whether indicated on the drawings or not.

aa. Furnish and install combination fire smoke dampers of suitable rating at all duct penetrations through all shafts, whether indicated on the drawings or not.

bb. Furnish and install flexible duct connectors at all duct connections to al HV/HVAC units.

cc. Provide fire stopping for all duct and piping penetrations through rated walls/slabs with pipe escutcheons.

dd. Furnish and install condensate drain piping with condensate drain pump, where required, complete check valves, insulation, etc. for a complete operating system.

ee. Furnish and install new gas piping to new roof top equipment as well as other appliances. Coordinate installation with local gas company. Provide gas shut off valves and gas pressure regulators for each equipment. Provide gas pipe supports with stainless steel rollers for roof top gas piping. (Note – All gas piping shall be in the Plumbing Contractor’s scope of work. This is for information only).

ff. Furnish and install anchors, guides, mechanical expansion joints for hot water piping.

gg. Tie in all units to existing CM3 BMS. Refer to specification section 230923 and drawings for details.

hh. Furnish and install all ancillary equipment needed for a complete and proper installation including, but not limited to anchors, hangers, expansion loops, fittings, strainers, valves, union, etc.

ii. All ductwork shall be properly fabricated, installed and supported as per SMACNA and ASHRAE guidelines. Contractor to perform duct leakage testing of entire ductwork.

jj. Contractor to perform testing, adjusting and balancing (TAB) of the entire mechanical and HVAC system, including all the indoor/roof top HV/HVAC/split AHU's, hot water distribution system, air side distribution, air outlets/inlets etc. Testing, Adjusting and Balancing (TAB) shall be done during the respective season for the units, during the summer season for cooling mode, during winter for heating mode, and during fall/spring for free cooling mode. Submit six (6) sets of air, water and unit TAB reports for review.

kk. The entire piping system shall be hydrostatically tested for a minimum of two (2) hours at a minimum of 150 psig or 1.5 times the working pressure, whichever is higher. Submit six (6) sets of pressure testing report for review.

ll. Submit six (6) sets of shop drawings of all equipment, sheet metal standards, piping standards, air outlets/inlets, supports, louvers, roof vents, controls, electricals, wiring diagram, etc.

mm. Contractor to prepare as-built drawings of the entire mechanical/HVAC system. Submit six (6) sets of Operation and Maintenance Manuals.

nn. Testing, Adjusting and Balancing (TAB) shall be done during the respective season for the units, during the summer season for cooling mode and during winter for heating mode.

oo. Contractor to provide sixteen (16) hour operator training for new DDC controls for owner designated personnel (broken up into as many sessions as requested by the owner) encompassing responding to alarms, events, messages and incidents, the use of reports, displaying point information, monitoring system status, managing building control applications, area and alarm segregation, and operator set-up and password assignment. THE TRAINING SHALL BE VIDEO TAPED. PROVIDE TWO (2) COPIES OF VIDEO TAPES FOR FUTURE REFERENCE BY THE OWNER.

pp. Contractor to provide sixteen (16) hour operator training for new equipment for owner designated personnel (broken up into as many sessions as requested by the owner) encompassing operation, maintenance, troubleshooting, filter replacement, etc. THE TRAINING SHALL BE VIDEO TAPED. PROVIDE TWO (2) COPIES OF VIDEO TAPES FOR FUTURE REFERENCE BY THE OWNER.

qq. Provide one (1) set of spare filters for each unit.

rr. Provide color coded identification tags, identification markers and equipment tags for all equipment including Roof Top/Indoor HV/HVAC/Split units, fans, pumps, boilers, ductwork, gas piping, hot water piping, cold water piping, condensate piping, valves, control valves, motorized dampers, relief vents, etc.

ss. Warranty: The entire system shall be warranted for a period of two complete years from the date of acceptance by the owner, including all materials and labor components.

tt. Between eleventh and twelfth month from the date of first startup for each piece of equipment of the complete HVAC system, the contractor shall re-commission the entire HVAC system including all units, outside air settings, airside systems, and waterside systems, to ensure performance, as per design drawings and specifications.

1.4 WORK UNDER OTHER CONTRACTS

A. General: All work shall be performed under a single prime contractor.

1.5 USE OF PREMISES

A. General: The Contractor shall have limited use of premises for construction operations as indicated on Drawings by the Contract limits. The building will be fully occupied during construction and all construction activities will have to be coordinated with the owner's use of the space. Any work inside of the building must be completed at night during second shift or on weekends and all areas must be put back in working order for the next day. Work on the roof, with the exception of rigging/crane, can be done during normal hours. Any crane lifts must be don't on the weekend and coordinated with the owner.

B. Use of Site: Limit use of premises to work in areas indicated. Do not disturb portions of Project site beyond areas in which the Work is indicated.

a. Owner Occupancy: Allow for Owner occupancy of Project site and use by the public.
b. Driveways and Entrances: Keep driveways parking garage, loading areas, and entrances serving premises clear and available to Owner, Owner's employees, and emergency vehicles at all times. Do not use these areas for parking or storage of materials.

A. Schedule deliveries to minimize use of driveways and entrances.
B. Schedule deliveries to minimize space and time requirements for storage of materials and equipment on-site.

C. Use of Existing Building: Maintain existing building in a weather tight condition throughout construction period. Repair damage caused by construction operations for the next business day. Protect building and its occupants during construction period.

1.6 OWNER'S OCCUPANCY REQUIREMENTS

A. Full Owner Occupancy: Owner will occupy the premises during entire construction period. Cooperate with Owner during construction operations to minimize conflicts and facilitate Owner usage including working second shift and weekends. Perform the Work so as not to interfere with Owner's operations. Maintain existing exits, unless otherwise indicated.

a. Maintain access to existing walkways, corridors, and other adjacent occupied or used facilities. Do not close or obstruct walkways, corridors, or other occupied or used facilities without written permission from Owner and authorities having jurisdiction.
b. Provide not less than 72 hours' notice to Owner of activities that will affect Owner's operations.

B. Owner Occupancy of Completed Areas of Construction: Owner reserves the right to occupy and to place and install equipment in completed areas of building, before Substantial Completion, provided such occupancy does not interfere with completion of the Work. Such placement of equipment and partial occupancy shall not constitute acceptance of the total Work.

a. Architect will prepare a Certificate of Substantial Completion for each specific portion of the Work to be occupied before Owner occupancy.
b. Obtain a Certificate of Occupancy from authorities having jurisdiction before Owner occupancy.
c. Before partial Owner occupancy, mechanical and electrical systems shall be fully operational, and required tests and inspections shall be successfully completed.

1.7 SPECIFICATION FORMATS AND CONVENTIONS

A. Specification Format: The Specifications are organized into Divisions and Sections using the CSI/CSC's "MasterFormat" numbering system.

a. Section Identification: The Specifications use Section numbers and titles to help cross-referencing in the Contract Documents. Sections in the Project Manual are in numeric sequence; however, the sequence is incomplete because all available Section numbers are not used. Consult the table of contents at the beginning of the Project Manual to determine numbers and names of Sections in the Contract Documents.
b. Division 1: Sections in Division 1 govern the execution of the Work of all Sections in the Specifications.

B. Specification Content: The Specifications use certain conventions for the style of language and the intended meaning of certain terms, words, and phrases when used in particular situations. These conventions are as follows:

a. Abbreviated Language: Language used in the Specifications and other Contract Documents is abbreviated. Words and meanings shall be interpreted as appropriate. Words implied, but not stated, shall be inferred as the sense requires. Singular words shall be interpreted as plural, and plural words shall be interpreted as singular where applicable as the context of the Contract Documents indicates.
b. Imperative mood and streamlined language are generally used in the Specifications. Requirements expressed in the imperative mood are to be performed by Contractor. Occasionally, the indicative or subjunctive mood may be used in the Section Text for clarity to describe responsibilities that must be fulfilled indirectly by Contractor or by others when so noted.

A. The words "shall," "shall be," or "shall comply with," depending on the context, are implied where a colon (:) is used within a sentence or phrase.

1.8 MISCELLANEOUS PROVISIONS

PART 2 - PRODUCTS (Not Used)

PART 3 - EXECUTION (Not Used)

END OF SECTION 230000

SECTION 230130 - HVAC AIR DUCT CLEANING

PART 1 - GENERAL

1.1 RELATED DOCUMENTS

A. Drawings and general provisions of the Contract, including General and Supplementary Conditions and Division 1 Specification Sections, apply to this Section.

1.2 SUMMARY

A. This Section includes cleaning of the following existing duct systems:

1. Supply system.
2. Return system.
3. Exhaust system.

B. Refer to drawings for areas/locations of existing duct system.

1.3 DEFINITIONS

A. ASCS: Air system cleaning specialist.

B. NADCA: National Air Duct Cleaners Association.

C. SMACNA: Sheet Metal and Air Conditioning Contractors' National Association.

1.4 SUBMITTALS

A. Manufacturer Certificates: Signed by manufacturers certifying that products comply with requirements.

B. Qualification Data: For ASCS.

C. Field quality-control test reports.

1.5 QUALITY ASSURANCE

A. ASCS Qualifications: A member of a nationally recognized nonprofit industry organization dedicated to the cleaning of HVAC systems.

1. Certification: Employ an ASCS certified by NADCA or a nationally recognized certification program.
2. Supervisor Qualifications: Certified by a nationally recognized program and organization.
3. Experience: Submit records of experience in the field of HVAC systems cleaning.
4. Equipment, Materials, and Labor: Have equipment, materials, and labor required to perform specified services.

B. Comply with current published standards of NADCA.

PART 2 - PRODUCTS

2.1 MANUFACTURERS

A. In other Part 2 articles where titles below introduce lists, the following requirements apply to product selection:

1. Available Manufacturers: Subject to compliance with requirements, manufacturers offering products that may be incorporated into the Work include, but are not limited to, manufacturers specified.
2. Manufacturers: Subject to compliance with requirements, provide products by one of the manufacturers specified.

2.2 SHEET METAL MATERIALS

A. Comply with SMACNA's "HVAC Duct Construction Standards - Metal and Flexible" for acceptable materials, material thicknesses, and duct construction methods, unless otherwise indicated.

B. Galvanized-Steel Sheet: Lock-forming quality; complying with ASTM A 653/A 653M and having G90 (Z275) coating designation; ducts shall have mill-phosphatized finish for surfaces exposed to view.

C. Reinforcement Shapes and Plates: Galvanized-steel reinforcement where installed on galvanized sheet metal ducts; compatible materials for aluminum and stainless-steel ducts.

D. Tie Rods: Galvanized steel, 1/4-inch minimum diameter for lengths 36 inches or less; 3/8-inch minimum diameter for lengths longer than 36 inches.

2.3 DUCT-MOUNTING ACCESS DOORS

A. General Description: Fabricate doors airtight and suitable for duct pressure class.

B. Rectangular Duct Door: Double wall; fabricated of galvanized sheet metal with insulation fill and thickness as indicated for duct pressure class. Include vision panel where indicated. Include 1-by-1-inch (25-by-25-mm) butt or piano hinge and cam latches.

1. Manufacturers:
   a. American Warming and Ventilating.
   b. Cesco Products.
   c. Ductmate Industries, Inc.
   d. Flexmaster U.S.A., Inc.
   e. Greenheck.
   f. McGill AirFlow Corporation.
   g. Nailor Industries Inc.
   h. Ventfabrics, Inc.
   i. Ward Industries, Inc.
2. Frame: Galvanized-steel sheet; with bendover tabs and foam gaskets.
3. Provide number of hinges and locks as follows:
   a. Less Than 12 Inches Square: Secure with two sash locks.
   b. Up to 18 Inches Square: Two hinges and two sash locks.

c. Up to 24 by 48 Inches: Three hinges and two compression latches with outside and inside handles.

C. Round Duct Door: Double wall; fabricated of galvanized sheet metal with insulation fill and 1-inch thickness. Include cam latches.

1. Manufacturers:
   a. Flexmaster U.S.A., Inc.
2. Frame: Galvanized-steel sheet; with spin-in notched frame.

D. Seal around frame attachment to duct and door to frame with neoprene or foam rubber.

E. Insulation: 1-inch thick fibrous-glass or polystyrene-foam board.

PART 3 - EXECUTION

3.1 EXAMINATION

A. Examine systems to determine appropriate methods, tools, and equipment required for performance of work.

B. Prepare written report listing conditions detrimental to performance of work.

C. Proceed with work only after unsatisfactory conditions have been corrected.

3.2 CLEANING

A. Engage a qualified ASCS to clean the following existing systems:

1. Supply system.
2. Return system.
3. Exhaust system.

B. Perform cleaning before air balancing or mark position of dampers and air-directional mechanical devices before cleaning.

C. Use duct-mounted access doors, as required, for physical and mechanical entry and for inspection.

1. Install additional duct-mounting access doors to comply with duct cleaning standards.
2. Disconnect and reconnect flexible ducts as needed for cleaning and inspection. Replace damaged and deteriorated flexible ducts.
3. Reseal rigid-fiberglass-duct systems according to NAIMA recommended practices.
4. Remove and reinstall ceiling components to gain access for duct cleaning. Clean ceiling components after they have been removed and replaced.

D. Mark position of dampers and air-directional mechanical devices before cleaning and restore to their marked position on completion.

E. Particulate Collection and Odor Control:

1. Where venting vacuuming system inside building, use HEPA filtration with 99.97 percent collection efficiency for 0.3-micron size (or greater) particles.
2. When venting vacuuming system outside building, use filtration to contain debris removed from the HVAC system and locate exhaust down wind and away from air intakes and other points of entry into building.

F. Clean the following metal-duct system components by removing visible surface contaminants and deposits:

1. Air outlets and inlets (registers, grilles, and diffusers).
2. Existing supply, return, and exhaust fans including fan housings, plenums (except ceiling supply and return plenums), scrolls, blades or vanes, shafts, baffles, dampers, and drive assemblies.
3. Coils and related components.
4. Return-air ducts, dampers, and actuators, except in ceiling plenums and mechanical room.
5. Supply-air ducts, dampers, actuators, and turning vanes.
6. Dedicated exhaust and ventilation components.

G. Mechanical Cleaning Methodology:

1. Clean metal-duct systems using mechanical cleaning methods that extract contaminants from within duct systems and remove contaminants from building.
2. Use vacuum-collection devices that are operated continuously during cleaning. Connect vacuum device to downstream end of ducts so areas being cleaned are under negative pressure.
3. Use mechanical agitation to dislodge debris adhered to interior duct surfaces without damaging integrity of metal ducts or duct liner.
4. Provide operative drainage system for washdown procedures.
5. Biocidal Agents and Coatings: Apply biocidal agents if fungus is present; use according to manufacturer's written instructions after removal of surface deposits and debris.

H. Cleanliness Verification:

1. Verify cleanliness after mechanical cleaning and before application of treatment, including biocidal agents and protective coatings.
2. Visually inspect metal-duct systems for contaminants.
3. Where contaminants are discovered, reclean and reinspect duct systems.

3.3 DUCT ACCESSORIES INSTALLATION

A. Install duct accessories according to applicable details in SMACNA's "HVAC Duct Construction Standards--Metal and Flexible" for metal ducts and in NAIMA AH116, "Fibrous Glass Duct Construction Standards," for fibrous-glass ducts.

B. Provide duct accessories of materials suited to duct materials; use galvanized-steel accessories in galvanized-steel and fibrous-glass ducts, stainless-steel accessories in stainless-steel ducts, and aluminum accessories in aluminum ducts.

C. Install duct-mounting access doors where access doors do not currently exist to allow for the cleaning of ducts, accessories, and terminal units as follows:

1. On both sides of duct coils.
2. Downstream from volume dampers, turning vanes, and equipment.

3. Adjacent to fire or smoke dampers; reset or install new fusible links.
4. Before and after each change in direction, at maximum 50-foot (15-m) spacing.
5. On sides of ducts where adequate clearance is available.

D. Install the following sizes for duct-mounting, rectangular access doors:

1. One-Hand or Inspection Access: 8 by 5 inches (200 by 125 mm).
2. Two-Hand Access: 12 by 6 inches (300 by 150 mm).
3. Head and Hand Access: 18 by 10 inches (460 by 250 mm).
4. Head and Shoulders Access: 21 by 14 inches (530 by 355 mm).
5. Body Access: 25 by 14 inches (635 by 355 mm).
6. Body Plus Ladder Access: 25 by 17 inches (635 by 430 mm).

3.4 CONNECTIONS

A. Reconnect ducts to fans and air-handling units with existing flexible connectors after cleaning ducts and flexible connectors. Replace existing damaged and deteriorated flexible connectors.

B. For fans developing static pressures of 5-inch wg (1250 Pa) and higher, cover replacement flexible connectors with loaded vinyl sheet held in place with metal straps.

C. Reconnect terminal units to supply ducts with existing flexible ducts or replace damaged and deteriorated existing flexible ducts with maximum 12-inch (300-mm) lengths of new flexible duct.

D. Reconnect diffusers or light troffer boots to low-pressure ducts with existing flexible ducts or replace damaged and deteriorated existing flexible ducts with maximum 60-inch (1500-mm) lengths of flexible duct clamped or strapped in place.

E. Reconnect existing and new flexible ducts to metal ducts with adhesive plus sheet metal screws.

3.5 FIELD QUALITY CONTROL

A. Verification of Coil Cleaning: Cleaning shall restore coil pressure drop to within 10 percent of pressure drop measured when coil was first installed. If original pressure drop is not known, coil will be considered clean only if it is free of foreign matter and chemical residue, based on thorough visual inspection.

B. Report results of tests in writing. Include photo documentation showing ductwork before and after cleaning.

END OF SECTION 230130

SECTION 230500 - COMMON WORK RESULTS FOR HVAC

PART 1 - GENERAL

1.1 RELATED DOCUMENTS

A. Drawings and general provisions of the Contract, including General and Supplementary Conditions and Division 01 Specification Sections, apply to this Section.

1.2 SUMMARY

A. This Section includes the following:

1. Piping materials and installation instructions common to most piping systems.
2. Transition fittings.
3. Dielectric fittings.
4. Mechanical sleeve seals.
5. Sleeves.
6. Escutcheons.
7. Grout.
8. Mechanical demolition.
9. Equipment installation requirements common to equipment sections.
10. Painting and finishing.
11. Concrete bases.
12. Supports and anchorages.

1.3 DEFINITIONS

A. Finished Spaces: Spaces other than mechanical and electrical equipment rooms, furred spaces, pipe and duct chases, unheated spaces immediately below roof, spaces above ceilings, unexcavated spaces, crawlspaces, and tunnels.

B. Exposed, Interior Installations: Exposed to view indoors. Examples include finished occupied spaces and mechanical equipment rooms.

C. Exposed, Exterior Installations: Exposed to view outdoors or subject to outdoor ambient temperatures and weather conditions. Examples include rooftop locations.

D. Concealed, Interior Installations: Concealed from view and protected from physical contact by building occupants. Examples include above ceilings and chases.

E. Concealed, Exterior Installations: Concealed from view and protected from weather conditions and physical contact by building occupants but subject to outdoor ambient temperatures. Examples include installations within unheated shelters.

F. The following are industry abbreviations for plastic materials:

1. CPVC: Chlorinated polyvinyl chloride plastic.
2. PE: Polyethylene plastic.

3. PVC: Polyvinyl chloride plastic.

G. The following are industry abbreviations for rubber materials:

1. EPDM: Ethylene-propylene-diene terpolymer rubber.
2. NBR: Acrylonitrile-butadiene rubber.

1.4 SUBMITTALS

A. Product Data: For the following:

1. Transition fittings.
2. Dielectric fittings.
3. Mechanical sleeve seals.
4. Escutcheons.

B. Welding certificates.

1.5 QUALITY ASSURANCE

A. Steel Support Welding: Qualify processes and operators according to AWS D1.1, "Structural Welding Code--Steel."

B. Steel Pipe Welding: Qualify processes and operators according to ASME Boiler and Pressure Vessel Code: Section IX, "Welding and Brazing Qualifications."

1. Comply with provisions in ASME B31 Series, "Code for Pressure Piping."
2. Certify that each welder has passed AWS qualification tests for welding processes involved and that certification is current.

C. Electrical Characteristics for mechanical Equipment: Equipment of higher electrical characteristics may be furnished provided such proposed equipment is approved in writing and connecting electrical services, circuit breakers, and conduit sizes are appropriately modified. If minimum energy ratings or efficiencies are specified, equipment shall comply with requirements.

1.6 DELIVERY, STORAGE, AND HANDLING

A. Deliver pipes and tubes with factory-applied end caps. Maintain end caps through shipping, storage, and handling to prevent pipe end damage and to prevent entrance of dirt, debris, and moisture.

B. Store plastic pipes protected from direct sunlight. Support to prevent sagging and bending.

1.7 COORDINATION

A. Arrange for pipe spaces, chases, slots, and openings in building structure during progress of construction, to allow for mechanical installations.

B. Coordinate installation of required supporting devices and set sleeves in poured-in-place concrete and other structural components as they are constructed.

C. Coordinate requirements for access panels and doors for mechanical items requiring access that are concealed behind finished surfaces.

PART 2 - PRODUCTS

2.1 MANUFACTURERS

A. In other Part 2 articles where subparagraph titles below introduce lists, the following requirements apply for product selection:

1. Available Manufacturers: Subject to compliance with requirements, manufacturers offering products that may be incorporated into the Work include, but are not limited to, the manufacturers specified.

2.2 PIPE, TUBE, AND FITTINGS

A. Refer to individual Division 23 piping Sections for pipe, tube, and fitting materials and joining methods.

B. Pipe Threads: ASME B1.20.1 for factory-threaded pipe and pipe fittings.

2.3 JOINING MATERIALS

A. Refer to individual Division 23 piping Sections for special joining materials not listed below.

B. Pipe-Flange Gasket Materials: Suitable for chemical and thermal conditions of piping system contents.

1. ASME B16.21, nonmetallic, flat, asbestos-free, 1/8-inch (3.2-mm) maximum thickness unless thickness or specific material is indicated.

   a. Full-Face Type: For flat-face, Class 125, cast-iron and cast-bronze flanges.
   b. Narrow-Face Type: For raised-face, Class 250, cast-iron and steel flanges.

2. AWWA C110, rubber, flat face, 1/8 inch (3.2 mm) thick, unless otherwise indicated; and full-face or ring type, unless otherwise indicated.

C. Flange Bolts and Nuts: ASME B18.2.1, carbon steel, unless otherwise indicated.

D. Plastic, Pipe-Flange Gasket, Bolts, and Nuts: Type and material recommended by piping system manufacturer, unless otherwise indicated.

E. Solder Filler Metals: ASTM B 32, lead-free alloys. Include water-flushable flux according to ASTM B 813.

F. Brazing Filler Metals: AWS A5.8, BCuP Series, copper-phosphorus alloys for general-duty brazing, unless otherwise indicated; and AWS A5.8, BAg1, silver alloy for refrigerant piping, unless otherwise indicated.

G. Welding Filler Metals: Comply with AWS D10.12 for welding materials appropriate for wall thickness and chemical analysis of steel pipe being welded.

H. Solvent Cements for Joining Plastic Piping:

1. CPVC Piping: ASTM F 493.
2. PVC Piping: ASTM D 2564. Include primer according to ASTM F 656.

I. Fiberglass Pipe Adhesive: As furnished or recommended by pipe manufacturer.

2.4 TRANSITION FITTINGS

A. Plastic-to-Metal Transition Fittings: CPVC and PVC one-piece fitting with manufacturer's Schedule 80 equivalent dimensions; one end with threaded brass insert, and one solvent-cement-joint end.

1. Acceptable Manufacturers:

a. Eslon Thermoplastics.
b. Charlotte Pipe and Foundry Company.
c. Cresline Plastic Pipe Co.
d. Approved Equal.

B. Plastic-to-Metal Transition Adaptors: One-piece fitting with manufacturer's SDR 11 equivalent dimensions; one end with threaded brass insert, and one solvent-cement-joint end.

1. Acceptable Manufacturers:

a. Thompson Plastics, Inc.
b. Genova Products.
c. King Brothers Industries.
d. Approved Equal.

C. Plastic-to-Metal Transition Unions: MSS SP-107, CPVC and PVC four-part union. Include brass end, solvent-cement-joint end, rubber O-ring, and union nut.

1. Acceptable Manufacturers:

a. NIBCO INC.
b. NIBCO, Inc.; Chemtrol Div.
c. Genova Products.
d. Approved Equal.

2.5 DIELECTRIC FITTINGS

A. Description: Combination fitting of copper alloy and ferrous materials with threaded, solder-joint, plain, or weld-neck end connections that match piping system materials.

B. Insulating Material: Suitable for system fluid, pressure, and temperature.

C. Dielectric Unions: Factory-fabricated, union assembly, for 250-psig (1725-kPa) minimum working pressure at 180 deg F (82 deg C).

1. Acceptable Manufacturers:

a. Capitol Manufacturing Co.
b. Central Plastics Company.
c. Eclipse, Inc.
d. Epco Sales, Inc.
e. Hart Industries, International, Inc.
f. Watts Industries, Inc.; Water Products Div.
g. Zurn Industries, Inc.; Wilkins Div.
h. Approved Equal.

D. Dielectric Flanges: Factory-fabricated, companion-flange assembly, for 150- or 300-psig (1035- or 2070-kPa) minimum working pressure as required to suit system pressures.

1. Acceptable Manufacturers:

a. Capitol Manufacturing Co.
b. Central Plastics Company.
c. Epco Sales, Inc.
d. Watts Industries, Inc.; Water Products Div.
e. Approved Equal.

E. Dielectric-Flange Kits: Companion-flange assembly for field assembly. Include flanges, full-face- or ring-type neoprene or phenolic gasket, phenolic or polyethylene bolt sleeves, phenolic washers, and steel backing washers.

1. Acceptable Manufacturers:

a. Advance Products & Systems, Inc.
b. Calpico, Inc.
c. Central Plastics Company.
d. Pipeline Seal and Insulator, Inc.
e. Approved Equal.

2. Separate companion flanges and steel bolts and nuts shall have 150- or 300-psig (1035- or 2070-kPa) minimum working pressure where required to suit system pressures.

F. Dielectric Couplings: Galvanized-steel coupling with inert and noncorrosive, thermoplastic lining; threaded ends; and 300-psig (2070-kPa) minimum working pressure at 225 deg F (107 deg C).

1. Acceptable Manufacturers:

a. Calpico, Inc.
b. Lochinvar Corp.
c. Epco Sales, Inc.
d. Approved Equal.

G. Dielectric Nipples: Electroplated steel nipple with inert and noncorrosive, thermoplastic lining; plain, threaded, or grooved ends; and 300-psig (2070-kPa) minimum working pressure at 225 deg F (107 deg C).

1. Acceptable Manufacturers:

a. Perfection Corp.
b. Precision Plumbing Products, Inc.
c. Sioux Chief Manufacturing Co., Inc.
d. Victaulic Co. of America.
e. Approved Equal.

2.6 MECHANICAL SLEEVE SEALS

A. Description: Modular sealing element unit, designed for field assembly, to fill annular space between pipe and sleeve.

1. Acceptable Manufacturers:

a. Advance Products & Systems, Inc.
b. Calpico, Inc.
c. Metraflex Co.
d. Pipeline Seal and Insulator, Inc.
e. Approved Equal.

2. Sealing Elements: EPDM interlocking links shaped to fit surface of pipe. Include type and number required for pipe material and size of pipe.
3. Pressure Plates: Stainless steel. Include two for each sealing element.
4. Connecting Bolts and Nuts: Stainless steel of length required to secure pressure plates to sealing elements. Include one for each sealing element.

2.7 SLEEVES

A. Galvanized-Steel Sheet: 0.0239-inch (0.6-mm) minimum thickness; round tube closed with welded longitudinal joint.

B. Steel Pipe: ASTM A 53, Type E, Grade B, Schedule 40, galvanized, plain ends.

C. Cast Iron: Cast or fabricated "wall pipe" equivalent to ductile-iron pressure pipe, with plain ends and integral waterstop, unless otherwise indicated.

D. Stack Sleeve Fittings: Manufactured, cast-iron sleeve with integral clamping flange. Include clamping ring and bolts and nuts for membrane flashing.

1. Underdeck Clamp: Clamping ring with set screws.

E. Molded PVC: Permanent, with nailing flange for attaching to wooden forms.

F. PVC Pipe: ASTM D 1785, Schedule 40.

G. Molded PE: Reusable, PE, tapered-cup shaped and smooth-outer surface with nailing flange for attaching to wooden forms.

2.8 ESCUTCHEONS

A. Description: Manufactured wall and ceiling escutcheons and floor plates, with an ID to closely fit around pipe, tube, and insulation of insulated piping and an OD that completely covers opening.

B. One-Piece, Deep-Pattern Type: Deep-drawn, box-shaped brass with polished chrome-plated finish.

C. One-Piece, Cast-Brass Type: With set screw.

1. Finish: Polished chrome-plated and rough brass.

D. Split-Casting, Cast-Brass Type: With concealed hinge and set screw.

1. Finish: Polished chrome-plated and rough brass.

E. One-Piece, Stamped-Steel Type: With set screw or spring clips and chrome-plated finish.

F. Split-Plate, Stamped-Steel Type: With concealed hinge, set screw or spring clips, and chrome-plated finish.

G. One-Piece, Floor-Plate Type: Cast-iron floor plate.

H. Split-Casting, Floor-Plate Type: Cast brass with concealed hinge and set screw.

2.9 GROUT

A. Description: ASTM C 1107, Grade B, nonshrink and nonmetallic, dry hydraulic-cement grout.

1. Characteristics: Post-hardening, volume-adjusting, nonstaining, noncorrosive, nongaseous, and recommended for interior and exterior applications.
2. Design Mix: 5000-psi (34.5-MPa), 28-day compressive strength.
3. Packaging: Premixed and factory packaged.

PART 3 - EXECUTION

3.1 MECHANICAL DEMOLITION

A. Refer to Division 01 Section "Cutting and Patching" for general demolition requirements and procedures.

B. Disconnect, demolish, and remove mechanical systems, equipment, and components indicated to be removed.

1. Piping to Be Removed: Remove portion of piping indicated to be removed and cap or plug remaining piping with same or compatible piping material.
2. Piping to Be Abandoned in Place: Drain piping and cap or plug piping with same or compatible piping material.
3. Ducts to Be Removed: Remove portion of ducts indicated to be removed and plug remaining ducts with same or compatible ductwork material.
4. Ducts to Be Abandoned in Place: Cap or plug ducts with same or compatible ductwork material.
5. Equipment to Be Removed: Disconnect and cap services and remove equipment.
6. Equipment to Be Removed and Reinstalled: Disconnect and cap services and remove, clean, and store equipment; when appropriate, reinstall, reconnect, and make equipment operational.
7. Equipment to Be Removed and Salvaged: Disconnect and cap services and remove equipment and deliver to Owner.

C. If pipe, insulation, or equipment to remain is damaged in appearance or is unserviceable, remove damaged or unserviceable portions and replace with new products of equal capacity and quality.

3.2 PIPING SYSTEMS - COMMON REQUIREMENTS

A. Install piping according to the following requirements and Division 23 Sections specifying piping systems.

B. Drawing plans, schematics, and diagrams indicate general location and arrangement of piping systems. Indicated locations and arrangements were used to size pipe and calculate friction loss, expansion, pump sizing, and other design considerations. Install piping as indicated unless deviations to layout are approved on Coordination Drawings.

C. Install piping in concealed locations, unless otherwise indicated and except in equipment rooms and service areas.

D. Install piping indicated to be exposed and piping in equipment rooms and service areas at right angles or parallel to building walls. Diagonal runs are prohibited unless specifically indicated otherwise.

E. Install piping above accessible ceilings to allow sufficient space for ceiling panel removal.

F. Install piping to permit valve servicing.

G. Install piping at indicated slopes.

H. Install piping free of sags and bends.

I. Install fittings for changes in direction and branch connections.

J. Install piping to allow application of insulation.

K. Select system components with pressure rating equal to or greater than system operating pressure.

L. Install escutcheons for penetrations of walls, ceilings, and floors according to the following:

1. New Piping:

    a. Piping with Fitting or Sleeve Protruding from Wall: One-piece, deep-pattern type.
    b. Chrome-Plated Piping: One-piece, cast-brass type with polished chrome-plated finish.
    c. Insulated Piping: One-piece, stamped-steel type with spring clips.
    d. Bare Piping at Wall and Floor Penetrations in Finished Spaces: One-piece, cast-brass type with polished chrome-plated finish.
    e. Bare Piping at Wall and Floor Penetrations in Finished Spaces: One-piece, stamped-steel type.
    f. Bare Piping at Ceiling Penetrations in Finished Spaces: One-piece or split-casting, cast-brass type with polished chrome-plated finish.
    g. Bare Piping at Ceiling Penetrations in Finished Spaces: One-piece, stamped-steel type or split-plate, stamped-steel type with concealed hinge and set screw.
    h. Bare Piping in Unfinished Service Spaces: One-piece, cast-brass type with polished chrome-plated finish.
    i. Bare Piping in Unfinished Service Spaces: One-piece, stamped-steel type with concealed or exposed-rivet hinge and set screw or spring clips.
    j. Bare Piping in Equipment Rooms: One-piece, cast-brass type.
    k. Bare Piping in Equipment Rooms: One-piece, stamped-steel type with set screw or spring clips.
    l. Bare Piping at Floor Penetrations in Equipment Rooms: One-piece, floor-plate type.

2. Existing Piping: Use the following:

    a. Chrome-Plated Piping: Split-casting, cast-brass type with chrome-plated finish.
    b. Insulated Piping: Split-plate, stamped-steel type with concealed or exposed-rivet hinge and spring clips.
    c. Bare Piping at Wall and Floor Penetrations in Finished Spaces: Split-casting, cast-brass type with chrome-plated finish.
    d. Bare Piping at Wall and Floor Penetrations in Finished Spaces: Split-plate, stamped-steel type with concealed hinge and spring clips.
    e. Bare Piping at Ceiling Penetrations in Finished Spaces: Split-casting, cast-brass type with chrome-plated finish.
    f. Bare Piping at Ceiling Penetrations in Finished Spaces: Split-plate, stamped-steel type with concealed hinge and set screw.
    g. Bare Piping in Unfinished Service Spaces: Split-casting, cast-brass type with polished chrome-plated finish.
    h. Bare Piping in Unfinished Service Spaces: Split-plate, stamped-steel type with concealed or exposed-rivet hinge and set screw or spring clips.
    i. Bare Piping in Equipment Rooms: Split-casting, cast-brass type.
    j. Bare Piping in Equipment Rooms: Split-plate, stamped-steel type with set screw or spring clips.
    k. Bare Piping at Floor Penetrations in Equipment Rooms: Split-casting, floor-plate type.

M. Sleeves are not required for core-drilled holes.

N. Permanent sleeves are not required for holes formed by removable PE sleeves.

O. Install sleeves for pipes passing through concrete and masonry walls and concrete floor and roof slabs.

P. Install sleeves for pipes passing through concrete and masonry walls, gypsum-board partitions, and concrete floor and roof slabs.

1. Cut sleeves to length for mounting flush with both surfaces.

a. Exception: Extend sleeves installed in floors of mechanical equipment areas or other wet areas 2 inches (50 mm) above finished floor level. Extend cast-iron sleeve fittings below floor slab as required to secure clamping ring if ring is specified.

2. Install sleeves in new walls and slabs as new walls and slabs are constructed.
3. Install sleeves that are large enough to provide 1/4-inch (6.4-mm) annular clear space between sleeve and pipe or pipe insulation. Use the following sleeve materials:

a. PVC Pipe Sleeves: For pipes smaller than NPS 6 (DN 150).
b. Steel Sheet Sleeves: For pipes NPS 6 (DN 150) and larger, penetrating gypsum-board partitions.

Q. Aboveground, Exterior-Wall Pipe Penetrations: Seal penetrations using sleeves and mechanical sleeve seals. Select sleeve size to allow for 1-inch (25-mm) annular clear space between pipe and sleeve for installing mechanical sleeve seals.

1. Install steel pipe for sleeves smaller than 6 inches (150 mm) in diameter.
2. Mechanical Sleeve Seal Installation: Select type and number of sealing elements required for pipe material and size. Position pipe in center of sleeve. Assemble mechanical sleeve seals and install in annular space between pipe and sleeve. Tighten bolts against pressure plates that cause sealing elements to expand and make watertight seal.

R. Underground, Exterior-Wall Pipe Penetrations: Install cast-iron "wall pipes" for sleeves. Seal pipe penetrations using mechanical sleeve seals. Select sleeve size to allow for 1-inch (25-mm) annular clear space between pipe and sleeve for installing mechanical sleeve seals.

1. Mechanical Sleeve Seal Installation: Select type and number of sealing elements required for pipe material and size. Position pipe in center of sleeve. Assemble mechanical sleeve seals and install in annular space between pipe and sleeve. Tighten bolts against pressure plates that cause sealing elements to expand and make watertight seal.

S. Fire-Barrier Penetrations: Maintain indicated fire rating of walls, partitions, ceilings, and floors at pipe penetrations. Seal pipe penetrations with firestop materials. Refer to Division 07 Section "Penetration Firestopping" for materials.

T. Verify final equipment locations for roughing-in.

U. Refer to equipment specifications in other Sections of these Specifications for roughing-in requirements.

3.3 PIPING JOINT CONSTRUCTION

A. Join pipe and fittings according to the following requirements and Division 23 Sections specifying piping systems.

B. Ream ends of pipes and tubes and remove burrs. Bevel plain ends of steel pipe.

C. Remove scale, slag, dirt, and debris from inside and outside of pipe and fittings before assembly.

D. Soldered Joints: Apply ASTM B 813, water-flushable flux, unless otherwise indicated, to tube end. Construct joints according to ASTM B 828 or CDA's "Copper Tube Handbook," using lead-free solder alloy complying with ASTM B 32.

E. Brazed Joints: Construct joints according to AWS's "Brazing Handbook," "Pipe and Tube" Chapter, using copper-phosphorus brazing filler metal complying with AWS A5.8.

F. Threaded Joints: Thread pipe with tapered pipe threads according to ASME B1.20.1. Cut threads full and clean using sharp dies. Ream threaded pipe ends to remove burrs and restore full ID. Join pipe fittings and valves as follows:

1. Apply appropriate tape or thread compound to external pipe threads unless dry seal threading is specified.
2. Damaged Threads: Do not use pipe or pipe fittings with threads that are corroded or damaged. Do not use pipe sections that have cracked or open welds.

G. Welded Joints: Construct joints according to AWS D10.12, using qualified processes and welding operators according to Part 1 "Quality Assurance" Article.

H. Flanged Joints: Select appropriate gasket material, size, type, and thickness for service application. Install gasket concentrically positioned. Use suitable lubricants on bolt threads.

I. Plastic Piping Solvent-Cement Joints: Clean and dry joining surfaces. Join pipe and fittings according to the following:

1. Comply with ASTM F 402 for safe-handling practice of cleaners, primers, and solvent cements.
2. CPVC Piping: Join according to ASTM D 2846/D 2846M Appendix.
3. PVC Pressure Piping: Join schedule number ASTM D 1785, PVC pipe and PVC socket fittings according to ASTM D 2672. Join other-than-schedule-number PVC pipe and socket fittings according to ASTM D 2855.
4. PVC Nonpressure Piping: Join according to ASTM D 2855.

J. Plastic Pressure Piping Gasketed Joints: Join according to ASTM D 3139.

K. Plastic Nonpressure Piping Gasketed Joints: Join according to ASTM D 3212.

L. PE Piping Heat-Fusion Joints: Clean and dry joining surfaces by wiping with clean cloth or paper towels. Join according to ASTM D 2657.

1. Plain-End Pipe and Fittings: Use butt fusion.
2. Plain-End Pipe and Socket Fittings: Use socket fusion.

M. Fiberglass Bonded Joints: Prepare pipe ends and fittings, apply adhesive, and join according to pipe manufacturer's written instructions.

3.4 PIPING CONNECTIONS

A. Make connections according to the following, unless otherwise indicated:

1. Install unions, in piping NPS 2 (DN 50) and smaller, adjacent to each valve and at final connection to each piece of equipment.
2. Install flanges, in piping NPS 2-1/2 (DN 65) and larger, adjacent to flanged valves and at final connection to each piece of equipment.
3. Dry Piping Systems: Install dielectric unions and flanges to connect piping materials of dissimilar metals.
4. Wet Piping Systems: Install dielectric coupling and nipple fittings to connect piping materials of dissimilar metals.

3.5 EQUIPMENT INSTALLATION - COMMON REQUIREMENTS

A. Install equipment to allow maximum possible headroom unless specific mounting heights are not indicated.

B. Install equipment level and plumb, parallel and perpendicular to other building systems and components in exposed interior spaces, unless otherwise indicated.

C. Install mechanical equipment to facilitate service, maintenance, and repair or replacement of components. Connect equipment for ease of disconnecting, with minimum interference to other installations. Extend grease fittings to accessible locations.

D. Install equipment to allow right of way for piping installed at required slope.

3.6 PAINTING

A. Painting of mechanical systems, equipment, and components is specified in Division 09 Sections "Interior Painting"

B. Damage and Touchup: Repair marred and damaged factory-painted finishes with materials and procedures to match original factory finish.

3.7 CONCRETE BASES

A. Concrete Bases: Anchor equipment to concrete base according to equipment manufacturer's written instructions and according to seismic codes at Project.

1. Construct concrete bases of dimensions indicated, but not less than 4 inches larger in both directions than supported unit.
2. Install dowel rods to connect concrete base to concrete floor. Unless otherwise indicated, install dowel rods on 18-inch centers around the full perimeter of the base.
3. Install epoxy-coated anchor bolts for supported equipment that extend through concrete base, and anchor into structural concrete floor.
4. Place and secure anchorage devices. Use supported equipment manufacturer's setting drawings, templates, diagrams, instructions, and directions furnished with items to be embedded.
5. Install anchor bolts to elevations required for proper attachment to supported equipment.

6. Install anchor bolts according to anchor-bolt manufacturer's written instructions.
7. Use 4000-psi, 28-day compressive-strength concrete and reinforcement as specified in Division 03 Section "Cast-in-Place Concrete."

3.8 ERECTION OF METAL SUPPORTS AND ANCHORAGES

A. Cut, fit, and place miscellaneous metal supports accurately in location, alignment, and elevation to support and anchor mechanical materials and equipment.

B. Field Welding: Comply with AWS D1.1.

3.9 ERECTION OF WOOD SUPPORTS AND ANCHORAGES

A. Cut, fit, and place wood grounds, nailers, blocking, and anchorages to support, and anchor mechanical materials and equipment.

B. Select fastener sizes that will not penetrate members if opposite side will be exposed to view or will receive finish materials. Tighten connections between members. Install fasteners without splitting wood members.

C. Attach to substrates as required to support applied loads.

3.10 GROUTING

A. Mix and install grout for mechanical equipment base bearing surfaces, pump and other equipment base plates, and anchors.

B. Clean surfaces that will come into contact with grout.

C. Provide forms as required for placement of grout.

D. Avoid air entrapment during placement of grout.

E. Place grout, completely filling equipment bases.

F. Place grout on concrete bases and provide smooth bearing surface for equipment.

G. Place grout around anchors.

H. Cure placed grout.

END OF SECTION 230500

SECTION 230513 - COMMON MOTOR REQUIREMENTS FOR HVAC EQUIPMENT

PART 1 - GENERAL

1.1 RELATED DOCUMENTS

A. Drawings and general provisions of the Contract, including General and Supplementary Conditions and Division 1 Specification Sections, apply to this Section.

1.2 SUMMARY

A. This Section includes basic requirements for factory and field-installed motors.

1.3 DEFINITIONS

A. Factory-Installed Motor: A motor installed by motorized-equipment manufacturer as a component of equipment.

B. Field-Installed Motor: A motor installed at Project site and not factory installed as an integral component of motorized equipment.

1.4 SUBMITTALS

A. Product Data for Field-Installed Motors: For each type and size of motor, provide nameplate data and ratings; shipping, installed, and operating weights; enclosure type and mounting arrangements; size, type, and location of winding terminations; conduit entry and ground lug locations; and information on coatings or finishes.

B. Shop Drawings for Field-Installed Motors: Dimensioned plans, elevations, sections, and details, including required clearances and service space around equipment. Include the following:

1. Each installed unit's type and details.
2. Nameplate legends.
3. Diagrams of power, signal, and control wiring. Provide schematic wiring diagram for each type of motor and for each control scheme.

C. Coordination Drawings: Floor plans showing dimensioned layout, required working clearances, and required area above and around field-installed motors. Show motor layout, mechanical power transfer link, driven load, and relationship between electrical components and adjacent structural and mechanical elements. Show support locations, type of support, and weight on each support. Indicate field measurements.

D. Manufacturer Seismic Qualification Certification: Submit certification that motors, accessories, and components will withstand seismic forces. Include the following:

1. Basis for Certification: Indicate whether withstand certification is based on actual test of assembled components or on calculation.

a. The term "withstand" means "the unit will remain in place without separation of any parts from the device when subjected to the seismic forces specified and the unit will be fully operational after the seismic event."

2. Dimensioned Outline Drawings of Equipment Unit: Identify center of gravity and locate and describe mounting and anchorage provisions.
3. Detailed description of equipment anchorage devices on which the certification is based and their installation requirements.

E. Qualification Data: For testing agency.

F. Source quality-control test reports.

G. Field quality-control test reports.

H. Operation and Maintenance Data: For field-installed motors to include in emergency, operation, and maintenance manuals.

1.5 QUALITY ASSURANCE

A. Testing Agency Qualifications: An independent agency, with the experience and capability to conduct the testing indicated, that is a member company of the InterNational Electrical Testing Association or is a nationally recognized testing laboratory (NRTL) as defined by OSHA in 29 CFR 1910.7, and that is acceptable to authorities having jurisdiction.

1. Testing Agency's Field Supervisor: Person currently certified by the InterNational Electrical Testing Association or the National Institute for Certification in Engineering Technologies to supervise on-site testing specified in Part 3.

B. Source Limitations: Obtain field-installed motors through one source from a single manufacturer.

C. Product Options for Field-Installed Motors: Drawings indicate size, profiles, and dimensional requirements of motors and are based on the specific system indicated.

D. Electrical Components, Devices, and Accessories: Listed and labeled as defined in latest NEC, by a testing agency acceptable to authorities having jurisdiction, and marked for intended use.

E. Comply with latest NEC.

1.6 COORDINATION

A. Coordinate features of motors, installed units, and accessory devices and features that comply with the following:

1. Compatible with the following:

a. Magnetic controllers.
b. Multispeed controllers.
c. Reduced-voltage controllers.

2. Designed and labeled for use with variable frequency controllers, and suitable for use throughout speed range without overheating.
3. Matched to torque and horsepower requirements of the load.
4. Matched to ratings and characteristics of supply circuit and required control sequence.

B. Coordinate motor support with requirements for driven load; access for maintenance and motor replacement; installation of accessories, belts, belt guards; and adjustment of sliding rails for belt tensioning.

PART 2 - PRODUCTS

2.1 MOTOR REQUIREMENTS

A. Motor requirements apply to factory and field installed motors except as follows:

1. Different ratings, performance, or characteristics for motor are specified in another Section.
2. Motorized-equipment manufacturer requires ratings, performance, or characteristics, other than those specified in this Section, to meet performance specified.

2.2 MOTOR CHARACTERISTICS

A. Motors 1/2 HP and Larger: Three phase (unless otherwise indicated on drawings). All motors shall be high-efficiency premium motors.

B. Motors Smaller Than 1/2 HP: Single phase.

C. Frequency Rating: 60 Hz.

D. Voltage Rating: NEMA standard voltage selected to operate on nominal circuit voltage to which motor is connected.

E. Service Factor: 1.15 for open drip-proof motors; 1.0 for totally enclosed motors.

F. Duty: Continuous duty at ambient temperature of 105 deg F and at altitude of 3300 feet above sea level.

G. Capacity and Torque Characteristics: Sufficient to start, accelerate, and operate connected loads at designated speeds, at installed altitude and environment, with indicated operating sequence, and without exceeding nameplate ratings or considering service factor.

H. Enclosure: Open drip-proof.

2.3 POLYPHASE MOTORS

A. Description: NEMA MG 1, Design B, medium induction motor.

B. Efficiency: Premium as defined in NEMA MG 1.

C. Stator: Copper windings, unless otherwise indicated.

1. Multispeed motors shall have separate winding for each speed.

D. Rotor: Squirrel cage, unless otherwise indicated.

E. Bearings: Double-shielded, pre-lubricated ball bearings suitable for radial and thrust loading.

F. Temperature Rise: Match insulation rating, unless otherwise indicated.

G. Insulation: Class F, unless otherwise indicated.

H. Code Letter Designation:

2.4 POLYPHASE MOTORS WITH ADDITIONAL REQUIREMENTS

A. Motors Used with Reduced-Inrush Controllers: Match wiring connection requirements for controller with required motor leads. Provide terminals in motor terminal box, suited to control method.

B. Source Quality Control for Field-Installed Motors: Perform the following tests on each motor according to NEMA MG 1:

1. Measure winding resistance.
2. Read no-load current and speed at rated voltage and frequency.
3. Measure locked rotor current at rated frequency.
4. Perform high-potential test.

2.5 SINGLE-PHASE MOTORS

A. Type: One of the following, to suit starting torque and requirements of specific motor application:

1. Permanent-split capacitor.
2. Split-phase start, capacitor run.
3. Capacitor start, capacitor run.

B. Shaded-Pole Motors: For motors 1/20 hp and smaller only.

C. Thermal Protection: Internal protection to automatically open power supply circuit to motor when winding temperature exceeds a safe value calibrated to temperature rating of motor insulation. Thermal-protection device shall automatically reset when motor temperature returns to normal range.

D. Bearings: Ball type for belt-connected motors and other motors with high radial forces on motor shaft; sealed, pre-lubricated-sleeve type for other single-phase motors.

E. Source Quality Control for Field-Installed Motors: Perform the following tests on each motor according to NEMA MG 1:

1. Measure winding resistance.

2. Read no-load current and speed at rated voltage and frequency.
3. Measure locked rotor current at rated frequency.
4. Perform high-potential test.

PART 3 - EXECUTION

3.1 EXAMINATION

A. Examine areas to receive field-installed motors for compliance with requirements, installation tolerances, and other conditions affecting performance.

B. Examine roughing-in for conduit systems to verify actual locations of conduit connections before motor installation.

C. Proceed with installation only after unsatisfactory conditions have been corrected.

3.2 FIELD-INSTALLED MOTOR INSTALLATION

A. Anchor each motor assembly to base, adjustable rails, or other support, arranged and sized according to manufacturer's written instructions. Attach by bolting. Level and align with load transfer link.

B. Comply with mounting and anchoring requirements specified in Division 23 Sections.

3.3 FIELD QUALITY CONTROL FOR FIELD-INSTALLED MOTORS

A. Prepare for acceptance tests.

1. Align motors, bases, shafts, pulleys, and belts. Tension belts according to manufacturer's written instructions.
2. Verify bearing lubrication.
3. Run each motor with its controller. Demonstrate correct rotation, alignment, and speed at motor design load.
4. Test interlocks and control and safety features for proper operation.
5. Verify that current and voltage for each phase comply with nameplate rating and NEMA MG 1 tolerances.

B. Manufacturer's Field Service: Engage a factory-authorized service representative to inspect, test, and adjust field-assembled components and equipment installation, including connections, and to assist in field testing. Report results in writing.

C. Testing Agency: Contractor will engage a qualified testing and inspecting agency to perform field tests and inspections and prepare test reports.

D. Testing Agency: Engage a qualified testing and inspecting agency to perform the following field tests and inspections and prepare test reports:

E. Perform the following field tests and inspections and prepare test reports:

1. Perform electrical tests and visual and mechanical inspections optional tests and inspections stated in NETA ATS on factory and field installed motors. Certify compliance with test parameters.
2. Correct malfunctioning units on-site, where possible, and retest to demonstrate compliance; otherwise, replace with new units and retest.

3.4 FIELD-INSTALLED MOTOR DEMONSTRATION

A. Engage a factory-authorized service representative to train Owner's maintenance personnel to adjust, operate, and maintain field-installed motors. Refer to Division 1 Section “Closeout Procedures."

END OF SECTION 230513

SECTION 230517 - SLEEVES AND SLEEVE SEALS FOR HVAC PIPING

PART 1 - GENERAL

1.01 RELATED DOCUMENTS

A. Drawings and general provisions of the Contract, including General and Supplementary Conditions and Division 01 Specification Sections, apply to this Section.

1.02 SUMMARY

A. Section Includes:

1. Sleeves.
2. Stack-sleeve fittings.
3. Sleeve-seal systems.
4. Sleeve-seal fittings.
5. Grout.

1.03 ACTION SUBMITTALS

A. Product Data: For each type of product indicated.

PART 2 - PRODUCTS

2.01 SLEEVES

A. Cast-Iron Wall Pipes: Cast or fabricated of cast or ductile iron and equivalent to ductile-iron pressure pipe, with plain ends and integral waterstop unless otherwise indicated.

B. Galvanized-Steel Wall Pipes: ASTM A 53/A 53M, Schedule 40, with plain ends and welded steel collar; zinc coated.

C. Galvanized-Steel-Pipe Sleeves: ASTM A 53/A 53M, Type E, Grade B, Schedule 40, zinc coated, with plain ends.

D. PVC sleeves in first paragraph below may be prohibited by fire authorities having jurisdiction.

E. PVC-Pipe Sleeves: ASTM D 1785, Schedule 40.

F. Galvanized-Steel-Sheet Sleeves: 0.0239-inch (0.6-mm) minimum thickness; round tube closed with welded longitudinal joint.

G. Molded-PE or -PP Sleeves: Removable, tapered-cup shaped, and smooth outer surface with nailing flange for attaching to wooden forms.

H. PVC sleeves in paragraph below may be prohibited by fire authorities having jurisdiction.

I. Molded-PVC Sleeves: With nailing flange for attaching to wooden forms.

2.02 STACK-SLEEVE FITTINGS

A. Description: Manufactured, cast-iron sleeve with integral clamping flange. Include clamping ring, bolts, and nuts for membrane flashing.

B. Underdeck Clamp: Clamping ring with setscrews.

2.03 SLEEVE-SEAL SYSTEMS

A. Description: Modular sealing-element unit, designed for field assembly, for filling annular space between piping and sleeve.

B. Sealing Elements: EPDM-rubber interlocking links shaped to fit surface of pipe. Include type and number required for pipe material and size of pipe.

C. Pressure Plates: Stainless steel.

D. Connecting Bolts and Nuts: Stainless steel of length required to secure pressure plates to sealing elements.

2.04 SLEEVE-SEAL FITTINGS

A. Description: Manufactured plastic, sleeve-type, waterstop assembly made for imbedding in concrete slab or wall. Unit has plastic or rubber waterstop collar with center opening to match piping OD.

2.05 GROUT

A. Standard: ASTM C 1107/C 1107M, Grade B, post-hardening and volume-adjusting, dry, hydraulic-cement grout.

B. Characteristics: Non-shrink; recommended for interior and exterior applications.

C. Design Mix: 5000-psi (34.5-MPa), 28-day compressive strength.

D. Packaging: Premixed and factory packaged.

PART 3 - EXECUTION

3.01 SLEEVE INSTALLATION

A. Install sleeves for piping passing through penetrations in floors, partitions, roofs, and walls.

B. For sleeves that will have sleeve-seal system installed, select sleeves of size large enough to provide 1-inch annular clear space between piping and concrete slabs and walls.

C. Sleeves are not required for core-drilled holes.

D. Install sleeves in concrete floors, concrete roof slabs, and concrete walls as new slabs and walls are constructed.

E. Permanent sleeves are not required for holes in slabs formed by molded-PE or -PP sleeves.

F. Cut sleeves to length for mounting flush with both surfaces.

G. Exception: Extend sleeves installed in floors of mechanical equipment areas or other wet areas 2 inches above finished floor level.

H. Using grout, seal the space outside of sleeves in slabs and walls without sleeve-seal system.

I. Install sleeves for pipes passing through interior partitions.

J. Cut sleeves to length for mounting flush with both surfaces.

K. Install sleeves that are large enough to provide 1/4-inch (6.4-mm) annular clear space between sleeve and pipe or pipe insulation.

L. Seal annular space between sleeve and piping or piping insulation; use joint sealants appropriate for size, depth, and location of joint. Comply with requirements for sealants specified in Section 079200 "Joint Sealants."

M. Fire-Barrier Penetrations: Maintain indicated fire rating of walls, partitions, ceilings, and floors at pipe penetrations. Seal pipe penetrations with firestop materials. Comply with requirements for firestopping specified in Section 078413 "Penetration Firestopping."

3.02 STACK-SLEEVE-FITTING INSTALLATION

A. Install stack-sleeve fittings in new slabs as slabs are constructed.

B. Install fittings that are large enough to provide 1/4-inch (6.4-mm) annular clear space between sleeve and pipe or pipe insulation.

C. Secure flashing between clamping flanges for pipes penetrating floors with membrane waterproofing. Comply with requirements for flashing specified in Section 076200 "Sheet Metal Flashing and Trim."

D. Install section of cast-iron soil pipe to extend sleeve to 2 inches (50 mm) above finished floor level.

E. Extend cast-iron sleeve fittings below floor slab as required to secure clamping ring if ring is specified.

F. Using grout, seal the space around outside of stack-sleeve fittings.

G. Fire-Barrier Penetrations: Maintain indicated fire rating of floors at pipe penetrations. Seal pipe penetrations with firestop materials. Comply with requirements for firestopping specified in Section 078413 "Penetration Firestopping."

3.03 SLEEVE-SEAL-SYSTEM INSTALLATION

A. Install sleeve-seal systems in sleeves in exterior concrete walls and slabs-on-grade at service piping entries into building.

B. Select type, size, and number of sealing elements required for piping material and size and for sleeve ID or hole size. Position piping in center of sleeve. Center piping in penetration, assemble sleeve-seal system components, and install in annular space between piping and sleeve. Tighten bolts against pressure plates that cause sealing elements to expand and make a watertight seal.

3.04 SLEEVE-SEAL-FITTING INSTALLATION

A. Install sleeve-seal fittings in new walls and slabs as they are constructed.

B. Assemble fitting components of length to be flush with both surfaces of concrete slabs and walls. Position waterstop flange to be centered in concrete slab or wall.

C. Secure nailing flanges to concrete forms.

D. Using grout, seal the space around outside of sleeve-seal fittings.

3.05 SLEEVE AND SLEEVE-SEAL SCHEDULE

A. Use sleeves and sleeve seals for the following piping-penetration applications:

1. Exterior Concrete Walls above Grade:
   a. Piping Smaller Than NPS 6: Cast-iron wall sleeves
   b. Piping NPS 6 and Larger: Cast-iron wall sleeves.
2. Exterior Concrete Walls below Grade:
   a. Piping Smaller Than NPS 6: Cast-iron wall sleeves with sleeve-seal system
   b. Select sleeve size to allow for 1-inch (25-mm) annular clear space between piping and sleeve for installing sleeve-seal system.
   c. Piping NPS 6 and Larger: Cast-iron wall sleeves with sleeve-seal system.
   d. Select sleeve size to allow for 1-inch (25-mm) annular clear space between piping and sleeve for installing sleeve-seal system.
3. Concrete Slabs-on-Grade:
   a. Piping Smaller Than NPS 6: Cast-iron wall sleeves with sleeve-seal system.
   b. Select sleeve size to allow for 1-inch (25-mm) annular clear space between piping and sleeve for installing sleeve-seal system.
   c. Piping NPS 6 and Larger: Cast-iron wall sleeves with sleeve-seal system.
   d. Select sleeve size to allow for 1-inch (25-mm) annular clear space between piping and sleeve for installing sleeve-seal system.
4. Concrete Slabs above Grade:
   a. Piping Smaller Than NPS 6: Galvanized-steel-pipe sleeves.
   b. Piping NPS 6 and Larger: Galvanized-steel-pipe sleeves.
5. Interior Partitions:
   a. Piping Smaller Than NPS 6: Galvanized-steel-pipe sleeves.
   b. Piping NPS 6 and Larger: Galvanized-steel-sheet sleeves.

END OF SECTION 230517

SECTION 230518 - ESCUTCHEONS FOR HVAC PIPING

PART 1 - GENERAL

1.01 RELATED DOCUMENTS

A. Drawings and general provisions of the Contract, including General and Supplementary Conditions and Division 01 Specification Sections, apply to this Section.

1.02 SUMMARY

A. Section Includes:

1. Escutcheons.
2. Floor plates.

1.03 ACTION SUBMITTALS

A. Product Data: For each type of product indicated.

PART 2 - PRODUCTS

2.01 ESCUTCHEONS

A. One-Piece, Cast-Brass Type: With polished, chrome-plated finish and setscrew fastener.

B. One-Piece, Stamped-Steel Type: With chrome-plated finish and spring-clip fasteners.

C. Split-Casting Brass Type: With polished, chrome-plated finish and with concealed hinge and setscrew.

D. Split-Plate, Stamped-Steel Type: With chrome-plated finish, concealed hinge, and spring-clip fasteners.

2.02 FLOOR PLATES

A. One-Piece Floor Plates: Cast-iron flange with holes for fasteners.

B. Split-Casting Floor Plates: Cast brass with concealed hinge.

PART 3 - EXECUTION

3.01 INSTALLATION

A. Install escutcheons for piping penetrations of walls, ceilings, and finished floors.
B. Install escutcheons with ID to closely fit around pipe, tube, and insulation of piping and with OD that completely covers opening.

C. Escutcheons for New Piping:

1. Piping with Fitting or Sleeve Protruding from Wall: One-piece, deep-pattern type.
2. Chrome-Plated Piping: One-piece, cast-brass type with polished, chrome-plated finish.
3. Insulated Piping: One-piece, stamped-steel type or split-plate, stamped-steel type with concealed hinge.
4. Bare Piping at Wall and Floor Penetrations in Finished Spaces: One-piece, cast-brass or split-casting brass type with polished, chrome-plated finish.
5. Bare Piping at Wall and Floor Penetrations in Finished Spaces: One-piece, stamped-steel type or split-plate, stamped-steel type with concealed hinge.
6. Bare Piping at Ceiling Penetrations in Finished Spaces: One-piece, cast-brass or split-casting brass type with polished, chrome-plated finish.
7. Bare Piping at Ceiling Penetrations in Finished Spaces: One-piece, stamped-steel type or split-plate, stamped-steel type with concealed hinge.
8. Bare Piping in Unfinished Service Spaces: One-piece, cast-brass or split-casting brass type with polished, chrome-plated finish.
9. Bare Piping in Unfinished Service Spaces: One-piece, stamped-steel type or split-plate, stamped-steel type with concealed hinge.
10. Bare Piping in Equipment Rooms: One-piece, cast-brass or split-casting brass type with polished, chrome-plated finish.
11. Bare Piping in Equipment Rooms: One-piece, stamped-steel type or split-plate, stamped-steel type with concealed hinge.

D. Install floor plates for piping penetrations of equipment-room floors.

E. Install floor plates with ID to closely fit around pipe, tube, and insulation of piping and with OD that completely covers opening.

1. New Piping: One-piece, floor-plate type.
2. Existing Piping: Split-casting, floor-plate type.

3.02 FIELD QUALITY CONTROL

A. Replace broken and damaged escutcheons and floor plates using new materials.

END OF SECTION 230518

SECTION 230523 - GENERAL-DUTY VALVES FOR HVAC PIPING

PART 1 - GENERAL

1.1 RELATED DOCUMENTS

A. Drawings and general provisions of the Contract, including General and Supplementary Conditions and Division 1 Specification Sections, apply to this Section.

1.2 SUMMARY

A. This Section includes the following general-duty valves:
1. Copper-alloy ball valves.
2. Ferrous-alloy ball valves.
3. Ferrous-alloy butterfly valves.
4. Bronze check valves.
5. Ferrous-alloy wafer check valves.
6. Spring-loaded, lift-disc check valves.
7. Bronze gate valves.
8. Cast-iron gate valves.
9. Bronze globe valves.
10. Cast-iron globe valves.

B. Related Sections include the following:

1. Division 23 Section "Mechanical Identification" for valve tags and charts.
2. Division 23 piping Sections for specialty valves applicable to those Sections only.

1.3 DEFINITIONS

A. The following are standard abbreviations for valves:

1. CWP: Cold working pressure.
2. EPDM: Ethylene-propylene-diene terpolymer rubber.
3. NBR: Acrylonitrile-butadiene rubber.
4. PTFE: Polytetrafluoroethylene plastic.
5. SWP: Steam working pressure.
6. TFE: Tetrafluoroethylene plastic.

1.4 SUBMITTALS

A. Product Data: For each type of valve indicated. Include body, seating, and trim materials; valve design; pressure and temperature classifications; end connections; arrangement; dimensions; and required clearances. Include list indicating valve and its application. Include rated capacities; shipping, installed, and operating weights; furnished specialties; and accessories.

1.5 QUALITY ASSURANCE

A. ASME Compliance: ASME B31.1 for power piping valves and ASME B31.9 for building services piping valves.

1. Exceptions: Domestic hot- and cold-water piping valves unless referenced.

B. ASME Compliance for Ferrous Valves: ASME B16.10 and ASME B16.34 for dimension and design criteria.

C. NSF Compliance: NSF 61 for valve materials for potable-water service.

1.6 DELIVERY, STORAGE, AND HANDLING

A. Prepare valves for shipping as follows:

1. Protect internal parts against rust and corrosion.
2. Protect threads, flange faces, grooves, and weld ends.
3. Set angle, gate, and globe valves closed to prevent rattling.
4. Set ball and plug valves open to minimize exposure of functional surfaces.
5. Set butterfly valves closed or slightly open.
6. Block check valves in either closed or open position.

B. Use the following precautions during storage:

1. Maintain valve end protection.
2. Store valves indoors and maintain at higher than ambient dew-point temperature. If outdoor storage is necessary, store valves off the ground in watertight enclosures.

C. Use sling to handle large valves; rig sling to avoid damage to exposed parts. Do not use handwheels or stems as lifting or rigging points.

PART 2 - PRODUCTS

2.1 MANUFACTURERS

A. In other Part 2 articles where subparagraph titles below introduce lists, the following requirements apply for product selection:

1. Available Manufacturers: Subject to compliance with requirements, manufacturers offering products that may be incorporated into the Work include, but are not limited to, the manufacturers specified.
2. Manufacturers: Subject to compliance with requirements, provide products by the manufacturers specified.

2.2 VALVES, GENERAL

A. Refer to Part 3 "Valve Applications" Article for applications of valves.

B. Bronze Valves: NPS 2 (DN 50) and smaller with threaded ends, unless otherwise indicated.

C. Ferrous Valves: NPS 2-1/2 (DN 65) and larger with flanged ends, unless otherwise indicated.

D. Valve Pressure and Temperature Ratings: Not less than indicated and as required for system pressures and temperatures.

E. Valve Sizes: Same as upstream pipe, unless otherwise indicated.

F. Valve Actuators:

1. Chain wheel: For attachment to valves, of size and mounting height, as indicated in the "Valve Installation" Article in Part 3.
2. Gear Drive: For quarter-turn valves NPS 8 (DN 200) and larger.
3. Hand wheel: For valves other than quarter-turn types.
4. Lever Handle: For quarter-turn valves NPS 6 (DN 150) and smaller, except plug valves.
5. Wrench: For plug valves with square heads. Furnish Owner with 1 wrench for every 10 plug valves, for each size square plug head.

G. Extended Valve Stems: On insulated valves.

H. Valve Flanges: ASME B16.1 for cast-iron valves, ASME B16.5 for steel valves, and ASME B16.24 for bronze valves.

I. Valve Grooved Ends: AWWA C606.

1. Solder Joint: With sockets according to ASME B16.18.

a. Caution: Use solder with melting point below 840 deg F (454 deg C) for angle, check, gate, and globe valves; below 421 deg F (216 deg C) for ball valves.

2. Threaded: With threads according to ASME B1.20.1.

J. Valve Bypass and Drain Connections: MSS SP-45.

2.3 COPPER-ALLOY BALL VALVES

A. Available Manufacturers:

B. Manufacturers:

1. One-Piece, Copper-Alloy Ball Valves:

a. American Valve, Inc.
b. Conbraco Industries, Inc.; Apollo Div.
c. Crane Co.; Crane Valve Group; Jenkins Valves.
d. Crane Co.; Crane Valve Group; Stockham Div.
e. DynaQuip Controls.
f. Grinnell Corporation.
g. Jamesbury, Inc.
h. Kitz Corporation of America.
i. Legend Valve & Fitting, Inc.

j. NIBCO INC.
k. Watts Industries, Inc.; Water Products Div.

C. Copper-Alloy Ball Valves, General: MSS SP-110.

D. One-Piece, Copper-Alloy Ball Valves: Brass or bronze body with chrome-plated bronze ball, PTFE or TFE seats.

2.4 FERROUS-ALLOY BALL VALVES

A. Available Manufacturers:

B. Manufacturers:

1. American Valve, Inc.
2. Conbraco Industries, Inc.; Apollo Div.
3. Cooper Cameron Corp.; Cooper Cameron Valves Div.
4. Crane Co.; Crane Valve Group; Stockham Div.
5. Flow-Tek, Inc.
6. Foster Valve Co.
7. Hammond Valve.
8. Jamesbury, Inc.
9. Jomar International, LTD.
10. Kitz Corporation of America.
11. KTM Products, Inc.
12. McCANNA, Incorporated.
13. Milwaukee Valve Company.
14. NIBCO INC.
15. PBM, Inc.
16. Richards Industries; Marwin Ball Valves.
17. Worcester Controls.

C. Ferrous-Alloy Ball Valves, General: MSS SP-72, with flanged ends.

D. Ferrous-Alloy Ball Valves: Class 150, full or regular port.

2.5 FERROUS-ALLOY BUTTERFLY VALVES

A. Available Manufacturers:

B. Manufacturers:

1. Flanged, Ferrous-Alloy Butterfly Valves:

a. Bray International, Inc.
b. Cooper Cameron Corp.; Cooper Cameron Valves Div.
c. Grinnell Corporation.
d. Mueller Steam Specialty.
e. Tyco International, Ltd.; Tyco Valves & Controls.

C. Ferrous-Alloy Butterfly Valves, General: MSS SP-67, Type I, for tight shutoff, with disc and lining suitable for potable water, unless otherwise indicated.

D. Flanged, 150-psig (1035-kPa) CWP Rating, Ferrous-Alloy Butterfly Valves: Flanged-end type with one- or two-piece stem.

2.6 BRONZE CHECK VALVES

A. Available Manufacturers:

B. Manufacturers:

1. Type 1, Bronze, Horizontal Lift Check Valves with Metal Disc:

a. Cincinnati Valve Co.
b. Crane Co.; Crane Valve Group; Crane Valves.
c. Crane Co.; Crane Valve Group; Stockham Div.
d. Red-White Valve Corp.
e. Walworth Co.

2. Type 1, Bronze, Vertical Lift Check Valves with Metal Disc:

a. Cincinnati Valve Co.
b. Crane Co.; Crane Valve Group; Crane Valves.
c. Crane Co.; Crane Valve Group; Jenkins Valves.
d. Red-White Valve Corp.

3. Type 3, Bronze, Swing Check Valves with Metal Disc:

a. American Valve, Inc.
b. Cincinnati Valve Co.
c. Crane Co.; Crane Valve Group; Crane Valves.
d. Crane Co.; Crane Valve Group; Jenkins Valves.
e. Crane Co.; Crane Valve Group; Stockham Div.
f. Grinnell Corporation.
g. Hammond Valve.
h. Kitz Corporation of America.
i. Legend Valve & Fitting, Inc.
j. Milwaukee Valve Company.
k. NIBCO INC.
l. Powell, Wm. Co.
m. Red-White Valve Corp.
n. Walworth Co.
o. Watts Industries, Inc.; Water Products Div.

C. Bronze Check Valves, General: MSS SP-80.

D. Type 1, Class 150, Bronze, Horizontal Lift Check Valves: Bronze body with bronze disc and seat.

E. Type 1, Class 150, Bronze, Vertical Lift Check Valves: Bronze body with bronze disc and seat.

F. Type 3, Class 150, Bronze, Swing Check Valves: Bronze body with bronze disc and seat.

2.7 FERROUS-ALLOY WAFER CHECK VALVES

A. Available Manufacturers:

B. Manufacturers:

1. Dual-Plate, Ferrous-Alloy, Wafer-Lug Check Valves:

a. Crane Co.; Crane Valve Group; Crane Valves.
b. Gulf Valve Co.
c. Valve and Primer Corp.

2. Dual-Plate, Ferrous-Alloy, Double-Flanged-Type Check Valves:

a. Crane Co.; Crane Valve Group; Crane Valves.
b. Gulf Valve Co.
c. Techno Corp.

C. Ferrous-Alloy Wafer Check Valves, General: API 594, spring loaded.

D. Dual-Plate, Class 125 or 150, Ferrous-Alloy, Double-Flanged Check Valves: Flanged-end body.

2.8 SPRING-LOADED, LIFT-DISC CHECK VALVES

A. Available Manufacturers:

B. Manufacturers:

1. Type I, Wafer Lift-Disc Check Valves:

a. Mueller Steam Specialty.

2. Type II, Compact-Wafer, Lift-Disc Check Valves:

a. Durabla Fluid Technology, Inc.
b. Flomatic Valves.
c. GA Industries, Inc.
d. Grinnell Corporation.
e. Hammond Valve.
f. Metraflex Co.
g. Milwaukee Valve Company.
h. Mueller Steam Specialty.
i. Multiplex Manufacturing Co.
j. NIBCO INC.
k. SSI Equipment, Inc.
l. Val-Matic Valve & Mfg. Corp.
m. Valve and Primer Corp.

3. Type III, Globe Lift-Disc Check Valves:

   a. Durabla Fluid Technology, Inc.
   b. Flomatic Valves.
   c. GA Industries, Inc.
   d. Grinnell Corporation.
   e. Hammond Valve.
   f. Metraflex Co.
   g. Milwaukee Valve Company.
   h. Multiplex Manufacturing Co.
   i. NIBCO INC.
   j. SSI Equipment, Inc.
   k. Val-Matic Valve & Mfg. Corp.
   l. Valve and Primer Corp.

4. Type IV, Threaded Lift-Disc Check Valves:

   a. Check-All Valve Mfg. Co.
   b. Durabla Fluid Technology, Inc.
   c. Grinnell Corporation.
   d. Legend Valve & Fitting, Inc.
   e. Metraflex Co.
   f. Milwaukee Valve Company.
   g. Mueller Steam Specialty.
   h. NIBCO INC.
   i. Watts Industries, Inc.; Water Products Div.

C. Lift-Disc Check Valves, General: FCI 74-1, with spring-loaded bronze or alloy disc and bronze or alloy seat.

D. Type I, Class 125, Wafer Lift-Disc Check Valves: Wafer style with cast-iron shell with diameter matching companion flanges.

E. Type II, Class 125, Compact-Wafer, Lift-Disc Check Valves: Compact-wafer style with cast-iron shell with diameter made to fit within bolt circle.

F. Type III, Class 125, Globe Lift-Disc Check Valves: Globe style with cast-iron shell and flanged ends.

G. Type IV, Class 125, Threaded Lift-Disc Check Valves: Threaded style with bronze shell and threaded ends.

2.9 BRONZE GLOBE VALVES

A. Available Manufacturers:

B. Manufacturers:

1. Type 1, Bronze Globe Valves with Metal Disc:

   a. Cincinnati Valve Co.
   b. Crane Co.; Crane Valve Group; Crane Valves.

c. Crane Co.; Crane Valve Group; Jenkins Valves.
d. Crane Co.; Crane Valve Group; Stockham Div.
e. Grinnell Corporation.
f. Hammond Valve.
g. Kitz Corporation of America.
h. Legend Valve & Fitting, Inc.
i. Milwaukee Valve Company.
j. NIBCO INC.
k. Powell, Wm. Co.
l. Red-White Valve Corp.
m. Walworth Co.

2. Type 2, Bronze Globe Valves with Nonmetallic Disc:

a. Cincinnati Valve Co.
b. Crane Co.; Crane Valve Group; Crane Valves.
c. Crane Co.; Crane Valve Group; Jenkins Valves.
d. Crane Co.; Crane Valve Group; Stockham Div.
e. Grinnell Corporation.
f. Hammond Valve.
g. Kitz Corporation of America.
h. McWane, Inc.; Kennedy Valve Div.
i. Milwaukee Valve Company.
j. NIBCO INC.
k. Powell, Wm. Co.
l. Red-White Valve Corp.
m. Walworth Co.

3. Type 3, Bronze Globe Valves with Renewable Seat and Metal Disc:

a. Cincinnati Valve Co.
b. Crane Co.; Crane Valve Group; Crane Valves.
c. Crane Co.; Crane Valve Group; Jenkins Valves.
d. Crane Co.; Crane Valve Group; Stockham Div.
e. Grinnell Corporation.
f. Hammond Valve.
g. Milwaukee Valve Company.
h. NIBCO INC.
i. Walworth Co.

C. Bronze Globe Valves, General: MSS SP-80, with ferrous-alloy hand wheel.

D. Type 1, Class 150, Bronze Globe Valves: Bronze body with bronze disc and union-ring bonnet.

E. Type 3, Class 150, Bronze Globe Valves: Bronze body with bronze disc and renewable seat. Include union-ring bonnet.

2.10 CAST-IRON GLOBE VALVES

A. Available Manufacturers:

B. Manufacturers:

1. Type I, Cast-Iron Globe Valves with Metal Seats:

    a. Cincinnati Valve Co.
    b. Crane Co.; Crane Valve Group; Crane Valves.
    c. Crane Co.; Crane Valve Group; Jenkins Valves.
    d. Crane Co.; Crane Valve Group; Stockham Div.
    e. Grinnell Corporation.
    f. Hammond Valve.
    g. Kitz Corporation of America.
    h. Milwaukee Valve Company.
    i. NIBCO INC.
    j. Powell, Wm. Co.
    k. Red-White Valve Corp.
    l. Walworth Co.

C. Cast-Iron Globe Valves, General: MSS SP-85.

D. Type I, Class 125, Cast-Iron Globe Valves: Gray-iron body with bronze seats.

PART 3 - EXECUTION

3.1 EXAMINATION

A. Examine piping system for compliance with requirements for installation tolerances and other conditions affecting performance.

    1. Proceed with installation only after unsatisfactory conditions have been corrected.

B. Examine valve interior for cleanliness, freedom from foreign matter, and corrosion. Remove special packing materials, such as blocks, used to prevent disc movement during shipping and handling.

C. Operate valves in positions from fully open to fully closed. Examine guides and seats made accessible by such operations.

D. Examine threads on valve and mating pipe for form and cleanliness.

E. Examine mating flange faces for conditions that might cause leakage. Check bolting for proper size, length, and material. Verify that gasket is of proper size, that its material composition is suitable for service, and that it is free from defects and damage.

F. Do not attempt to repair defective valves; replace with new valves.

3.2 VALVE APPLICATIONS

A. Refer to piping Sections for specific valve applications. If valve applications are not indicated, use the following:

    1. Shutoff Service: Ball, butterfly, or gate valves.
    2. Throttling Service: Ball or globe valves.

3. Pump Discharge: Spring-loaded, lift-disc check valves.

B. If valves with specified SWP classes or CWP ratings are not available, the same types of valves with higher SWP class or CWP ratings may be substituted.

C. Heating Water Piping: Use the following types of valves:
1. Ball Valves, NPS 2 (DN 50) and Smaller: One or Two-piece, CWP rating, copper alloy.
2. Ball Valves, NPS 2-1/2 (DN 65) and Larger: Class 150, ferrous alloy.
3. Butterfly Valves, NPS 2-1/2 (DN 65) and Larger: CWP rating, ferrous alloy, with EPDM liner.
4. Lift Check Valves, NPS 2 (DN 50) and Smaller: Type 2, Class 150, horizontal / vertical, bronze.
5. Swing Check Valves, NPS 2 (DN 50) and Smaller: Type 4, Class 150, bronze.
6. Swing Check Valves, NPS 2-1/2 (DN 65) and Larger: Type II, Class 125, gray iron.
7. Wafer Check Valves, NPS 2-1/2 (DN 65) and Larger: Single / Dual-plate, wafer-lug/ double-flanged, Class 150, ferrous alloy.
8. Spring-Loaded, Lift-Disc Check Valves, NPS 2 (DN 50) and Smaller: Type IV, Class 150.
9. Spring-Loaded, Lift-Disc Check Valves, NPS 2-1/2 (DN 65) and Larger: Class 125, cast iron.
10. Gate Valves, NPS 2 (DN 50) and Smaller: Type 2 / 3, Class 150, bronze.
11. Gate Valves, NPS 2-1/2 (DN 65) and Larger: Type I, Class 125, OS&Y, bronze-mounted cast iron.
12. Globe Valves, NPS 2 (DN 50) and Smaller: Type 2, Class 150, bronze.
13. Globe Valves, NPS 2-1/2 (DN 65) and Larger: Type I, Class 125, bronze-mounted cast iron.

3.3 VALVE INSTALLATION

A. Piping installation requirements are specified in other Division 23 Sections. Drawings indicate general arrangement of piping, fittings, and specialties.

B. Install valves with unions or flanges at each piece of equipment arranged to allow service, maintenance, and equipment removal without system shutdown.

C. Locate valves for easy access and provide separate support where necessary.

D. Install valves in horizontal piping with stem at or above center of pipe.

E. Install valves in position to allow full stem movement.

F. Install chainwheel operators on valves NPS 4 (DN 100) and larger and more than 96 inches above floor. Extend chains to 60 inches above finished floor elevation.

G. Install check valves for proper direction of flow and as follows:

1. Swing Check Valves: In horizontal position with hinge pin level.
2. Dual-Plate Check Valves: In horizontal or vertical position, between flanges.
3. Lift Check Valves: With stem upright and plumb.

3.4 JOINT CONSTRUCTION

A. Grooved Joints: Assemble joints with keyed coupling housing, gasket, lubricant, and bolts according to coupling and fitting manufacturer's written instructions.

B. Soldered Joints: Use ASTM B 813, water-flushable, lead-free flux; ASTM B 32, lead-free-alloy solder; and ASTM B 828 procedure, unless otherwise indicated.

3.5 ADJUSTING

A. Adjust or replace valve packing after piping systems have been tested and put into service but before final adjusting and balancing. Replace valves if persistent leaking occurs.

END OF SECTION 230523

SECTION 230529 - HANGERS AND SUPPORTS FOR HVAC PIPING AND EQUIPMENT

PART 1 - GENERAL

1.1 RELATED DOCUMENTS

A. Drawings and general provisions of the Contract, including General and Supplementary Conditions and Division 01 Specification Sections, apply to this Section.

1.2 SUMMARY

A. Section Includes:

1. Metal pipe hangers and supports.
2. Trapeze pipe hangers.
3. Fiberglass pipe hangers.
4. Metal framing systems.
5. Fiberglass strut systems.
6. Thermal-hanger shield inserts.
7. Fastener systems.
8. Equipment supports.

B. Related Sections:

1. Section 233113 "Metal Ducts" for duct hangers and supports.

1.3 DEFINITIONS

A. MSS: Manufacturers Standardization Society of The Valve and Fittings Industry Inc.

1.4 PERFORMANCE REQUIREMENTS

A. Delegated Design: Design trapeze pipe hangers and equipment supports, including comprehensive engineering analysis by a qualified professional engineer, using performance requirements and design criteria indicated.

B. Structural Performance: Hangers and supports for HVAC piping and equipment shall withstand the effects of gravity loads and stresses within limits and under conditions indicated according to ASCE/SEI 7.

1. Design supports for multiple pipes, including pipe stands, capable of supporting combined weight of supported systems, system contents, and test water.
2. Design equipment supports capable of supporting combined operating weight of supported equipment and connected systems and components.
3. Design seismic-restraint hangers and supports for piping and equipment.

1.5 ACTION SUBMITTALS

A. Product Data: For each type of product indicated.

B. Shop Drawings: Signed and sealed by a qualified professional engineer. Show fabrication and installation details and include calculations for the following; include Product Data for components:

1. Trapeze pipe hangers.
2. Metal framing systems.
3. Fiberglass strut systems.
4. Pipe stands.
5. Equipment supports.

C. Delegated-Design Submittal: For trapeze hangers indicated to comply with performance requirements and design criteria, including analysis data signed and sealed by the qualified professional engineer responsible for their preparation.

1. Detail fabrication and assembly of trapeze hangers.
2. Design Calculations: Calculate requirements for designing trapeze hangers.

1.6 INFORMATIONAL SUBMITTALS

A. Welding certificates.

1.7 QUALITY ASSURANCE

A. Structural Steel Welding Qualifications: Qualify procedures and personnel according to AWS D1.1/D1.1M, "Structural Welding Code - Steel."

B. Pipe Welding Qualifications: Qualify procedures and operators according to ASME Boiler and Pressure Vessel Code.

PART 2 - PRODUCTS

2.1 METAL PIPE HANGERS AND SUPPORTS

A. Carbon-Steel Pipe Hangers and Supports:

1. Description: MSS SP-58, Types 1 through 58, factory-fabricated components.
2. Galvanized Metallic Coatings: Pre-galvanized or hot dipped.
3. Nonmetallic Coatings: Plastic coating, jacket, or liner.
4. Padded Hangers: Hanger with fiberglass or other pipe insulation pad or cushion to support bearing surface of piping.
5. Hanger Rods: Continuous-thread rod, nuts, and washer made of carbon steel.

B. Copper Pipe Hangers:

1. Description: MSS SP-58, Types 1 through 58, copper-coated-steel, factory-fabricated components.
2. Hanger Rods: Continuous-thread rod, nuts, and washer made of copper-coated steel.

2.2 TRAPEZE PIPE HANGERS

A. Description: MSS SP-69, Type 59, shop- or field-fabricated pipe-support assembly made from structural carbon-steel shapes with MSS SP-58 carbon-steel hanger rods, nuts, saddles, and U-bolts.

2.3 THERMAL-HANGER SHIELD INSERTS

A. Insulation-Insert Material for Cold Piping: ASTM C 552, Type II cellular glass with 100-psig (688-kPa) or ASTM C 591, Type VI, Grade 1 polyisocyanurate with 125-psig (862-kPa) minimum compressive strength and vapor barrier.

B. Insulation-Insert Material for Hot Piping: Water-repellent treated, ASTM C 533, Type I calcium silicate with 100-psig (688-kPa) ASTM C 552, Type II cellular glass with 100-psig (688-kPa) or [ASTM C 591, Type VI, Grade 1 polyisocyanurate with 125-psig (862-kPa) minimum compressive strength.

C. For Trapeze or Clamped Systems: Insert and shield shall cover entire circumference of pipe.

D. For Clevis or Band Hangers: Insert and shield shall cover lower 180 degrees of pipe.

E. Insert Length: Extend 2 inches (50 mm) beyond sheet metal shield for piping operating below ambient air temperature.

2.4 FASTENER SYSTEMS

A. Powder-Actuated Fasteners: Threaded-steel stud, for use in hardened portland cement concrete with pull-out, tension, and shear capacities appropriate for supported loads and building materials where used.

B. Mechanical-Expansion Anchors: Insert-wedge-type, [zinc-coated] [stainless-] steel anchors, for use in hardened portland cement concrete; with pull-out, tension, and shear capacities appropriate for supported loads and building materials where used.

2.5 EQUIPMENT SUPPORTS

A. Description: Welded, shop- or field-fabricated equipment support made from structural carbon-steel shapes.

2.6 MISCELLANEOUS MATERIALS

A. Structural Steel: ASTM A 36/A 36M, carbon-steel plates, shapes, and bars; black and galvanized.

B. Grout: ASTM C 1107, factory-mixed and -packaged, dry, hydraulic-cement, non-shrink and nonmetallic grout; suitable for interior and exterior applications.

1. Properties: Non-staining, noncorrosive, and nongaseous.
2. Design Mix: 5000-psi (34.5-MPa), 28-day compressive strength.

PART 3 - EXECUTION

3.1 HANGER AND SUPPORT INSTALLATION

A. Metal Pipe-Hanger Installation: Comply with MSS SP-69 and MSS SP-89. Install hangers, supports, clamps, and attachments as required to properly support piping from the building structure.

B. Metal Trapeze Pipe-Hanger Installation: Comply with MSS SP-69 and MSS SP-89. Arrange for grouping of parallel runs of horizontal piping, and support together on field-fabricated trapeze pipe hangers.

1. Pipes of Various Sizes: Support together and space trapezes for smallest pipe size or install intermediate supports for smaller diameter pipes as specified for individual pipe hangers.
2. Field fabricate from ASTM A 36/A 36M, carbon-steel shapes selected for loads being supported. Weld steel according to AWS D1.1/D1.1M.

C. Metal Framing System Installation: Arrange for grouping of parallel runs of piping, and support together on field-assembled metal framing systems.

D. Thermal-Hanger Shield Installation: Install in pipe hanger or shield for insulated piping.

E. Fastener System Installation:

1. Install powder-actuated fasteners for use in lightweight concrete or concrete slabs less than 4 inches (100 mm) thick in concrete after concrete is placed and completely cured. Use operators that are licensed by powder-actuated tool manufacturer. Install fasteners according to powder-actuated tool manufacturer's operating manual.
2. Install mechanical-expansion anchors in concrete after concrete is placed and completely cured. Install fasteners according to manufacturer's written instructions.

F. Pipe Stand Installation:

1. Pipe Stand Types except Curb-Mounted Type: Assemble components and mount on smooth roof surface. Do not penetrate roof membrane.
2. Curb-Mounted-Type Pipe Stands: Assemble components or fabricate pipe stand and mount on permanent, stationary roof curb.

G. Install hangers and supports complete with necessary attachments, inserts, bolts, rods, nuts, washers, and other accessories.

H. Equipment Support Installation: Fabricate from welded-structural-steel shapes.

I. Install hangers and supports to allow controlled thermal and seismic movement of piping systems, to permit freedom of movement between pipe anchors, and to facilitate action of expansion joints, expansion loops, expansion bends, and similar units.

J. Install lateral bracing with pipe hangers and supports to prevent swaying.

K. Install building attachments within concrete slabs or attach to structural steel. Install additional attachments at concentrated loads, including valves, flanges, and strainers, [NPS 2-1/2 (DN 65)] <Insert size> and larger and at changes in direction of piping. Install concrete inserts before concrete is placed; fasten inserts to forms and install reinforcing bars through openings at top of inserts.

L. Load Distribution: Install hangers and supports so that piping live and dead loads and stresses from movement will not be transmitted to connected equipment.

M. Pipe Slopes: Install hangers and supports to provide indicated pipe slopes and to not exceed maximum pipe deflections allowed by ASME B31.9 for building services piping.

N. Insulated Piping:

1. Attach clamps and spacers to piping.

    a. Piping Operating above Ambient Air Temperature: Clamp may project through insulation.
    b. Piping Operating below Ambient Air Temperature: Use thermal-hanger shield insert with clamp sized to match OD of insert.
    c. Do not exceed pipe stress limits allowed by ASME B31.9 for building services piping.

2. Install MSS SP-58, Type 39, protection saddles if insulation without vapor barrier is indicated. Fill interior voids with insulation that matches adjoining insulation.

    a. Option: Thermal-hanger shield inserts may be used. Include steel weight-distribution plate for pipe NPS 4 (DN 100) and larger if pipe is installed on rollers.

3. Install MSS SP-58, Type 40, protective shields on cold piping with vapor barrier. Shields shall span an arc of 180 degrees.

    a. Option: Thermal-hanger shield inserts may be used. Include steel weight-distribution plate for pipe NPS 4 (DN 100) and larger if pipe is installed on rollers.

4. Shield Dimensions for Pipe: Not less than the following:

    a. NPS 1/4 to NPS 3-1/2 (DN 8 to DN 90): 12 inches (305 mm) long and 0.048 inch (1.22 mm) thick.
    b. NPS 4 (DN 100): 12 inches (305 mm) long and 0.06 inch (1.52 mm) thick.

5. Pipes NPS 8 (DN 200) and Larger: Include wood or reinforced calcium-silicate-insulation inserts of length at least as long as protective shield.
6. Thermal-Hanger Shields: Install with insulation same thickness as piping insulation.

3.2 EQUIPMENT SUPPORTS

A. Fabricate structural-steel stands to suspend equipment from structure overhead or to support equipment above floor.

B. Grouting: Place grout under supports for equipment and make bearing surface smooth.

C. Provide lateral bracing, to prevent swaying, for equipment supports.

3.3 ADJUSTING

A. Hanger Adjustments: Adjust hangers to distribute loads equally on attachments and to achieve indicated slope of pipe.

B. Trim excess length of continuous-thread hanger and support rods to 1-1/2 inches (40 mm).

3.4 PAINTING

A. Touchup: Clean field welds and abraded areas of shop paint. Paint exposed areas immediately after erecting hangers and supports. Use same materials as used for shop painting. Comply with SSPC-PA 1 requirements for touching up field-painted surfaces.

1. Apply paint by brush or spray to provide a minimum dry film thickness of 2.0 mils (0.05 mm).

B. Touchup: Cleaning and touchup painting of field welds, bolted connections, and abraded areas of shop paint on miscellaneous metal are specified in Section 099113 "Exterior Painting" and Section 099123 "Interior Painting".

C. Galvanized Surfaces: Clean welds, bolted connections, and abraded areas and apply galvanizing-repair paint to comply with ASTM A 780.

3.5 HANGER AND SUPPORT SCHEDULE

A. Specific hanger and support requirements are in Sections specifying piping systems and equipment.

B. Comply with MSS SP-69 for pipe-hanger selections and applications that are not specified in piping system Sections.

C. Use hangers and supports with galvanized metallic coatings for piping and equipment that will not have field-applied finish.

D. Use nonmetallic coatings on attachments for electrolytic protection where attachments are in direct contact with copper tubing.

E. Use carbon-steel pipe hangers and supports, metal trapeze pipe hangers and metal framing systems and attachments for general service applications.

F. Use copper-plated pipe hangers and copper attachments for copper piping and tubing.

G. Use padded hangers for piping that is subject to scratching.

H. Use thermal-hanger shield inserts for insulated piping and tubing.

I. Horizontal-Piping Hangers and Supports: Unless otherwise indicated and except as specified in piping system Sections, install the following types:

1. Adjustable, Steel Clevis Hangers (MSS Type 1): For suspension of noninsulated or insulated, stationary pipes NPS 1/2 to NPS 30 (DN 15 to DN 750).
2. Yoke-Type Pipe Clamps (MSS Type 2): For suspension of up to 1050 deg F (566 deg C), pipes NPS 4 to NPS 24 (DN 100 to DN 600), requiring up to 4 inches (100 mm) of insulation.
3. Carbon- or Alloy-Steel, Double-Bolt Pipe Clamps (MSS Type 3): For suspension of pipes NPS 3/4 to NPS 36 (DN 20 to DN 900), requiring clamp flexibility and up to 4 inches (100 mm) of insulation.
4. Steel Pipe Clamps (MSS Type 4): For suspension of cold and hot pipes NPS 1/2 to NPS 24 (DN 15 to DN 600) if little or no insulation is required.
5. Pipe Hangers (MSS Type 5): For suspension of pipes NPS 1/2 to NPS 4 (DN 15 to DN 100), to allow off-center closure for hanger installation before pipe erection.
6. Adjustable, Swivel Split- or Solid-Ring Hangers (MSS Type 6): For suspension of non-insulated, stationary pipes NPS 3/4 to NPS 8 (DN 20 to DN 200).
7. Adjustable, Steel Band Hangers (MSS Type 7): For suspension of non-insulated, stationary pipes NPS 1/2 to NPS 8 (DN 15 to DN 200).
8. Adjustable Band Hangers (MSS Type 9): For suspension of non-insulated, stationary pipes NPS 1/2 to NPS 8 (DN 15 to DN 200).
9. Adjustable, Swivel-Ring Band Hangers (MSS Type 10): For suspension of non-insulated, stationary pipes NPS 1/2 to NPS 8 (DN 15 to DN 200).
10. Split Pipe Ring with or without Turnbuckle Hangers (MSS Type 11): For suspension of non-insulated, stationary pipes NPS 3/8 to NPS 8 (DN 10 to DN 200).
11. Extension Hinged or Two-Bolt Split Pipe Clamps (MSS Type 12): For suspension of non-insulated, stationary pipes NPS 3/8 to NPS 3 (DN 10 to DN 80).
12. U-Bolts (MSS Type 24): For support of heavy pipes NPS 1/2 to NPS 30 (DN 15 to DN 750).
13. Clips (MSS Type 26): For support of insulated pipes not subject to expansion or contraction.
14. Pipe Saddle Supports (MSS Type 36): For support of pipes NPS 4 to NPS 36 (DN 100 to DN 900), with steel-pipe base stanchion support and cast-iron floor flange or carbon-steel plate.
15. Pipe Stanchion Saddles (MSS Type 37): For support of pipes NPS 4 to NPS 36 (DN 100 to DN 900), with steel-pipe base stanchion support and cast-iron floor flange or carbon-steel plate, and with U-bolt to retain pipe.
16. Adjustable Pipe Saddle Supports (MSS Type 38): For stanchion-type support for pipes NPS 2-1/2 to NPS 36 (DN 65 to DN 900) if vertical adjustment is required, with steel-pipe base stanchion support and cast-iron floor flange.
17. Single-Pipe Rolls (MSS Type 41): For suspension of pipes NPS 1 to NPS 30 (DN 25 to DN 750), from two rods if longitudinal movement caused by expansion and contraction might occur.
18. Adjustable Roller Hangers (MSS Type 43): For suspension of pipes NPS 2-1/2 to NPS 24 (DN 65 to DN 600), from single rod if horizontal movement caused by expansion and contraction might occur.
19. Complete Pipe Rolls (MSS Type 44): For support of pipes NPS 2 to NPS 42 (DN 50 to DN 1050) if longitudinal movement caused by expansion and contraction might occur but vertical adjustment is not necessary.

20. Pipe Roll and Plate Units (MSS Type 45): For support of pipes NPS 2 to NPS 24 (DN 50 to DN 600) if small horizontal movement caused by expansion and contraction might occur and vertical adjustment is not necessary.
21. Adjustable Pipe Roll and Base Units (MSS Type 46): For support of pipes NPS 2 to NPS 30 (DN 50 to DN 750) if vertical and lateral adjustment during installation might be required in addition to expansion and contraction.

J. Vertical-Piping Clamps: Unless otherwise indicated and except as specified in piping system Sections, install the following types:

1. Extension Pipe or Riser Clamps (MSS Type 8): For support of pipe risers NPS 3/4 to NPS 24 (DN 24 to DN 600).
2. Carbon- or Alloy-Steel Riser Clamps (MSS Type 42): For support of pipe risers NPS 3/4 to NPS 24 (DN 20 to DN 600) if longer ends are required for riser clamps.

K. Hanger-Rod Attachments: Unless otherwise indicated and except as specified in piping system Sections, install the following types:

1. Steel Turnbuckles (MSS Type 13): For adjustment up to 6 inches (150 mm) for heavy loads.
2. Steel Clevises (MSS Type 14): For 120 to 450 deg F (49 to 232 deg C) piping installations.
3. Swivel Turnbuckles (MSS Type 15): For use with MSS Type 11, split pipe rings.
4. Malleable-Iron Sockets (MSS Type 16): For attaching hanger rods to various types of building attachments.
5. Steel Weldless Eye Nuts (MSS Type 17): For 120 to 450 deg F (49 to 232 deg C) piping installations.

L. Building Attachments: Unless otherwise indicated and except as specified in piping system Sections, install the following types:

1. Steel or Malleable Concrete Inserts (MSS Type 18): For upper attachment to suspend pipe hangers from concrete ceiling.
2. Top-Beam C-Clamps (MSS Type 19): For use under roof installations with bar-joist construction, to attach to top flange of structural shape.
3. Side-Beam or Channel Clamps (MSS Type 20): For attaching to bottom flange of beams, channels, or angles.
4. Center-Beam Clamps (MSS Type 21): For attaching to center of bottom flange of beams.
5. Welded Beam Attachments (MSS Type 22): For attaching to bottom of beams if loads are considerable and rod sizes are large.
6. C-Clamps (MSS Type 23): For structural shapes.
7. Top-Beam Clamps (MSS Type 25): For top of beams if hanger rod is required tangent to flange edge.
8. Side-Beam Clamps (MSS Type 27): For bottom of steel I-beams.
9. Steel-Beam Clamps with Eye Nuts (MSS Type 28): For attaching to bottom of steel I-beams for heavy loads.
10. Linked-Steel Clamps with Eye Nuts (MSS Type 29): For attaching to bottom of steel I-beams for heavy loads, with link extensions.
11. Malleable-Beam Clamps with Extension Pieces (MSS Type 30): For attaching to structural steel.
12. Welded-Steel Brackets: For support of pipes from below or for suspending from above by using clip and rod. Use one of the following for indicated loads:

    a. Light (MSS Type 31): 750 lb (340 kg).

b. Medium (MSS Type 32): 1500 lb (680 kg).
c. Heavy (MSS Type 33): 3000 lb (1360 kg).

13. Side-Beam Brackets (MSS Type 34): For sides of steel or wooden beams.
14. Plate Lugs (MSS Type 57): For attaching to steel beams if flexibility at beam is required.
15. Horizontal Travelers (MSS Type 58): For supporting piping systems subject to linear horizontal movement where headroom is limited.

M. Saddles and Shields: Unless otherwise indicated and except as specified in piping system Sections, install the following types:

1. Steel-Pipe-Covering Protection Saddles (MSS Type 39): To fill interior voids with insulation that matches adjoining insulation.
2. Protection Shields (MSS Type 40): Of length recommended in writing by manufacturer to prevent crushing insulation.
3. Thermal-Hanger Shield Inserts: For supporting insulated pipe.

N. Spring Hangers and Supports: Unless otherwise indicated and except as specified in piping system Sections, install the following types:

1. Restraint-Control Devices (MSS Type 47): Where indicated to control piping movement.
2. Spring Cushions (MSS Type 48): For light loads if vertical movement does not exceed 1-1/4 inches (32 mm).
3. Spring-Cushion Roll Hangers (MSS Type 49): For equipping Type 41, roll hanger with springs.
4. Spring Sway Braces (MSS Type 50): To retard sway, shock, vibration, or thermal expansion in piping systems.
5. Variable-Spring Hangers (MSS Type 51): Preset to indicated load and limit variability factor to 25 percent to allow expansion and contraction of piping system from hanger.
6. Variable-Spring Base Supports (MSS Type 52): Preset to indicated load and limit variability factor to 25 percent to allow expansion and contraction of piping system from base support.
7. Variable-Spring Trapeze Hangers (MSS Type 53): Preset to indicated load and limit variability factor to 25 percent to allow expansion and contraction of piping system from trapeze support.
8. Constant Supports: For critical piping stress and if necessary to avoid transfer of stress from one support to another support, critical terminal, or connected equipment. Include auxiliary stops for erection, hydrostatic test, and load-adjustment capability. These supports include the following types:

a. Horizontal (MSS Type 54): Mounted horizontally.
b. Vertical (MSS Type 55): Mounted vertically.
c. Trapeze (MSS Type 56): Two vertical-type supports and one trapeze member.

O. Comply with MSS SP-69 for trapeze pipe-hanger selections and applications that are not specified in piping system Sections.

P. Comply with MFMA-103 for metal framing system selections and applications that are not specified in piping system Sections.

Q. Use powder-actuated fasteners or mechanical-expansion anchors instead of building attachments where required in concrete construction.

END OF SECTION 230529

SECTION 230548 - MECHANICAL VIBRATION CONTROLS

PART 1 - GENERAL

1.1 RELATED DOCUMENTS

A. Drawings and general provisions of the Contract, including General and Supplementary Conditions and Division 1 Specification Sections, apply to this Section.

1.2 SUMMARY

A. This Section includes the following:

1. Elastomeric isolation pads and mounts.
2. Restrained elastomeric isolation mounts.
3. Freestanding and restrained spring isolators.
4. Housed spring mounts.
5. Elastomeric hangers.
6. Spring hangers.
7. Spring hangers with vertical-limit stops.
8. Thrust limits.
9. Pipe riser resilient supports.
10. Resilient pipe guides.
11. Freestanding and restrained air spring isolators.
12. Restrained vibration isolation roof-curb rails.
13. Steel and inertia, vibration isolation equipment bases.

1.3 DEFINITIONS

A. A_v: Effective peak velocity related acceleration coefficient.

1.4 SUBMITTALS

A. Product Data: Include load deflection curves for each vibration isolation device.

B. Shop Drawings: Include the following:

1. Design Calculations: Calculate requirements for selecting vibration isolators and for designing vibration isolation bases.
2. Riser Supports: Include riser diagrams and calculations showing anticipated expansion and contraction at each support point, initial and final loads on building structure, and spring deflection changes. Include certification that riser system has been examined for excessive stress and that none will exist.
3. Vibration Isolation Base Details: Detail fabrication, including anchorages and attachments to structure and to supported equipment. Include auxiliary motor slides and rails, base weights, equipment static loads, power transmission, component misalignment, and cantilever loads.

C. Welding certificates.

D. Air-Mounting System Performance Certification: Include natural frequency, load, and damping tests performed by an independent laboratory or acoustician.

E. Manufacturer Seismic Qualification Certification: Submit certification that all specified equipment will withstand seismic forces identified in "Performance Requirements" Article above. Include the following:

1. Basis for Certification: Indicate whether withstand certification is based on actual test of assembled components or on calculations.
   a. The term "withstand" means "the unit will remain in place without separation of any parts from the device when subjected to the seismic forces specified and the unit will be fully operational after the seismic event."
2. Dimensioned Outline Drawings of Equipment Unit: Identify center of gravity and locate and describe mounting and anchorage provisions.
3. Detailed description of equipment anchorage devices on which the certification is based and their installation requirements.

1.5 QUALITY ASSURANCE

A. Welding: Qualify procedures and personnel according to AWS D1.1, "Structural Welding Code--Steel."

1.6 COORDINATION

A. Coordinate size and location of concrete bases. Cast anchor-bolt inserts into base. Concrete, reinforcement, and formwork requirements are specified in Division 3.

B. Coordinate installation of roof curbs, equipment supports, and roof penetrations. These items are specified in Division 7 Section "Roof Accessories."

PART 2 - PRODUCTS

2.1 MANUFACTURERS

A. In other Part 2 articles where subparagraph titles below introduce lists, the following requirements apply for product selection:

1. Available Manufacturers: Subject to compliance with requirements, manufacturers offering products that may be incorporated into the Work include, but are not limited to, the manufacturers specified.
2. Manufacturers: Subject to compliance with requirements, provide products by the manufacturers specified.

2.2 VIBRATION ISOLATORS

A. Available Manufacturers:

B. Manufacturers:

1. Kinetics Noise Control, Inc.
2. Mason Industries, Inc.
3. Vibration Eliminator Co., Inc.
4. Vibration Isolation Co., Inc.

C. Elastomeric Isolator Pads: Oil- and water-resistant elastomer or natural rubber, arranged in single or multiple layers, molded with a nonslip pattern and galvanized steel baseplates of sufficient stiffness for uniform loading over pad area, and factory cut to sizes that match requirements of supported equipment.

1. Material: Standard neoprene or Natural rubber.
2. Number of Layers: Multiple.

D. Restrained Elastomeric Mounts: All-directional elastomeric mountings with seismic restraint.

1. Materials: Cast-ductile-iron housing containing two separate and opposing, molded, bridge-bearing neoprene elements that prevent central threaded sleeve and attachment bolt from contacting the casting during normal operation.
2. Neoprene: Shock-absorbing materials compounded according to the standard for bridge-bearing neoprene as defined by AASHTO.

E. Spring Isolators: Freestanding, laterally stable, open-spring isolators.

1. Outside Spring Diameter: Not less than 80 percent of the compressed height of the spring at rated load.
2. Minimum Additional Travel: 50 percent of the required deflection at rated load.
3. Lateral Stiffness: More than 80 percent of the rated vertical stiffness.
4. Overload Capacity: Support 200 percent of rated load, fully compressed, without deformation or failure.
5. Baseplates: Factory drilled for bolting to structure and bonded to 1/4-inch thick, rubber isolator pad attached to baseplate underside. Baseplates shall limit floor load to 100 psig.
6. Top Plate and Adjustment Bolt: Threaded top plate with adjustment bolt and cap screw to fasten and level equipment.

F. Pipe Riser Resilient Support: All-directional, acoustical pipe anchor consisting of 2 steel tubes separated by a minimum of 1/2-inch thick, 60-durometer neoprene. Include steel and neoprene vertical-limit stops arranged to prevent vertical travel in both directions. Design support for a maximum load on the isolation material of 500 psig and for equal resistance in all directions.

G. Resilient Pipe Guides: Telescopic arrangement of 2 steel tubes separated by a minimum of 1/2-inch thick, 60-durometer neoprene. Factory set guide height with a shear pin to allow vertical motion due to pipe expansion and contraction. Shear pin shall be removable and reinsertable to allow for selection of pipe movement. Guides shall be capable of motion to meet location requirements.

2.3 VIBRATION ISOLATION EQUIPMENT BASES

A. Available Manufacturers:

B. Manufacturers:

1. Mason Industries, Inc.
2. Vibration Eliminator Co., Inc.
3. Vibration Isolation Co., Inc.

2.4 FACTORY FINISHES

A. Manufacturer's standard prime-coat finish ready for field painting.

B. Finish: Manufacturer's standard paint applied to factory-assembled and -tested equipment before shipping.

1. Powder coating on springs and housings.
2. All hardware shall be electro-galvanized. Hot-dip galvanize metal components for exterior use.
3. Baked enamel for metal components on isolators for interior use.
4. Color-code or otherwise mark vibration isolation and seismic-control devices to indicate capacity range.

PART 3 - EXECUTION

3.1 EXAMINATION

A. Examine areas and equipment to receive vibration isolation and seismic-control devices for compliance with requirements, installation tolerances, and other conditions affecting performance.

B. Examine roughing-in of reinforcement and cast-in-place anchors to verify actual locations before installation.

C. Proceed with installation only after unsatisfactory conditions have been corrected.

3.2 INSTALLATION

A. Install seismic snubbers on isolated equipment. Locate snubbers as close as possible to vibration isolators and bolt to equipment base and supporting structure.

B. Install steel angles or channel, sized to prevent buckling, clamped with ductile-iron clamps to hanger rods for trapeze and individual pipe hangers. At trapeze anchor locations, shackle piping to trapeze. Requirements apply equally to hanging equipment. Do not weld angles to rods.

C. Install resilient bolt isolation washers on equipment anchor bolts.

3.3 EQUIPMENT BASES

A. Fill concrete inertia bases, after installing base frame, with 3000-psi concrete; trowel to a smooth finish.

B. Concrete Bases: Anchor equipment to concrete base according to supported equipment manufacturer's written instructions for seismic codes at Project site.

1. Install dowel rods to connect concrete base to concrete floor. Unless otherwise indicated, install dowel rods on 18-inch centers around the full perimeter of the base.
2. Install epoxy-coated anchor bolts for supported equipment that extend through concrete base and anchor into structural concrete floor.
3. Place and secure anchorage devices. Use Setting Drawings, templates, diagrams, instructions, and directions furnished with items to be embedded.
4. Install anchor bolts to elevations required for proper attachment to supported equipment.
5. Install anchor bolts according to anchor-bolt manufacturer's written instructions.
6. Cast-in-place concrete materials and placement requirements are specified in Division 3.

3.4 FIELD QUALITY CONTROL

A. Testing: Owner will engage a qualified testing agency to perform the following field quality-control testing:

B. Testing: Engage a qualified testing agency to perform the following field quality-control testing:

C. Testing: Perform the following field quality-control testing:

1. Isolator seismic-restraint clearance.
2. Isolator deflection.
3. Snubber minimum clearances.
4. Air-Mounting System Leak Test: After installation, charge system and test for leaks. Repair leaks and retest until no leaks exist.
5. Air-Mounting System Operational Test: Test the compressed-air leveling system. Remove malfunctioning units, replace with new units, and retest.
6. Test and adjust air-mounting system controls and safeties. Replace damaged and malfunctioning controls and equipment.

D. Air-Mounting System Manufacturer's Field Service: Engage a factory-authorized service representative to inspect field-assembled components and equipment installation, including piping connections. Report results in writing.

1. Isolator seismic-restraint clearance.
2. Isolator deflection.
3. Snubber minimum clearances.
4. Leak Test: After installation, charge system and test for leaks. Repair leaks and retest until no leaks exist.
5. Operational Test: Test the compressed-air leveling system. Remove malfunctioning units, replace with new units, and retest.
6. Test and adjust controls and safeties. Replace damaged and malfunctioning controls and equipment.

3.5 ADJUSTING

A. Adjust isolators after piping systems have been filled and equipment is at operating weight.

B. Adjust limit stops on restrained spring isolators to mount equipment at normal operating height. After equipment installation is complete, adjust limit stops so they are out of contact during normal operation.

C. Attach thrust limits at centerline of thrust and adjust to a maximum of 1/4-inch movement during start and stop.

D. Adjust air spring leveling mechanism.

E. Adjust active height of spring isolators.

F. Adjust snubbers according to manufacturer's written recommendations.

G. Adjust seismic restraints to permit free movement of equipment within normal mode of operation.

H. Torque anchor bolts according to equipment manufacturer's written recommendations to resist seismic forces.

3.6 CLEANING

A. After completing equipment installation, inspect vibration isolation and seismic-control devices. Remove paint splatters and other spots, dirt, and debris.

3.7 DEMONSTRATION

A. Engage a factory-authorized service representative to train Owner's maintenance personnel to adjust, operate, and maintain air-mounting systems. Refer to Division 1 Section "Closeout Procedures".

END OF SECTION 230548

SECTION 230553 - MECHANICAL IDENTIFICATION

PART 1 - GENERAL

1.1 RELATED DOCUMENTS

A. Drawings and general provisions of the Contract, including General and Supplementary Conditions and Division 1 Specification Sections, apply to this Section.

1.2 SUMMARY

A. This Section includes the following mechanical identification materials and their installation:

1. Equipment nameplates.
2. Equipment markers.
3. Equipment signs.
4. Access panel and door markers.
5. Pipe markers.
6. Duct markers.
7. Stencils.
8. Warning tags.

1.3 SUBMITTALS

A. Product Data: For each type of product indicated.

B. Samples: For color, letter style, and graphic representation required for each identification material and device.

C. Valve numbering scheme.

1.4 QUALITY ASSURANCE

A. ASME Compliance: Comply with ASME A13.1, "Scheme for the Identification of Piping Systems," for letter size, length of color field, colors, and viewing angles of identification devices for piping.

1.5 COORDINATION

A. Coordinate installation of identifying devices with completion of covering and painting of surfaces where devices are to be applied.

B. Coordinate installation of identifying devices with location of access panels and doors.

C. Install identifying devices before installing acoustical ceilings and similar concealment.

PART 2 - PRODUCTS

2.1 EQUIPMENT IDENTIFICATION DEVICES

A. Equipment Nameplates: Metal, with data engraved or stamped, for permanent attachment on equipment.

1. Data:

a. Manufacturer, product name, model number, and serial number.
b. Capacity, operating and power characteristics, and essential data.
c. Labels of tested compliances.

2. Location: Accessible and visible.
3. Fasteners: As required to mount on equipment.

B. Equipment Markers: Engraved, color-coded laminated plastic. Include contact-type, permanent adhesive.

1. Terminology: Match schedules as closely as possible.
2. Data:

a. Name and plan number.
b. Equipment service.
c. Design capacity.
d. Other design parameters such as pressure drop, entering and leaving conditions, and speed.

3. Size: 2-1/2 by 4 inches for control devices, dampers, and valves; 4-1/2 by 6 inches for equipment.

C. Equipment Signs: ASTM D 709, Type I, cellulose, paper-base, phenolic-resin-laminate engraving stock; Grade ES-2, black surface, black phenolic core, with white melamine subcore, unless otherwise indicated. Fabricate in sizes required for message. Provide holes for mechanical fastening.

1. Data: Instructions for operation of equipment and for safety procedures.
2. Engraving: Manufacturer's standard letter style, of sizes and with terms to match equipment identification.
3. Thickness: 1/8 inch, unless otherwise indicated.
4. Thickness: 1/16 inch for units up to 20 sq. in. or 8 inches in length, and 1/8 inch for larger units.
5. Fasteners: Self-tapping, stainless-steel screws or contact-type, permanent adhesive.

D. Access Panel and Door Markers: 1/16-inch thick, engraved laminated plastic, with abbreviated terms and numbers corresponding to identification. Provide 1/8-inch center hole for attachment.

1. Fasteners: Self-tapping, stainless-steel screws or contact-type, permanent adhesive.

2.2 PIPING IDENTIFICATION DEVICES

A. Manufactured Pipe Markers, General: Preprinted, color-coded, with lettering indicating service, and showing direction of flow.

1. Colors: Comply with ASME A13.1, unless otherwise indicated.
2. Lettering: Use piping system terms indicated and abbreviate only as necessary for each application length.
3. Pipes with OD, Including Insulation, Less Than 6 Inches: Full-band pipe markers extending 360 degrees around pipe at each location.
4. Arrows: Integral with piping system service lettering to accommodate both directions; or as separate unit on each pipe marker to indicate direction of flow.

B. Pre-tensioned Pipe Markers: Precoiled semi-rigid plastic formed to cover full circumference of pipe and to attach to pipe without adhesive.

C. Shaped Pipe Markers: Preformed semi-rigid plastic formed to partially cover circumference of pipe and to attach to pipe with mechanical fasteners that do not penetrate insulation vapor barrier.

D. Self-Adhesive Pipe Markers: Plastic with pressure-sensitive, permanent-type, self-adhesive back.

E. Plastic Tape: Continuously printed, vinyl tape at least 3 mils thick with pressure-sensitive, permanent-type, self-adhesive back.

1. Width for Markers on Pipes with OD, Including Insulation, Less Than 6 Inches: 3/4 inch minimum.
2. Width for Markers on Pipes with OD, Including Insulation, 6 Inches or Larger: 1-1/2 inches minimum.

2.3 DUCT IDENTIFICATION DEVICES

A. Duct Markers: Engraved, color-coded laminated plastic. Include direction and quantity of airflow and duct service (such as supply, return, and exhaust). Include contact-type, permanent adhesive.

2.4 STENCILS

A. Stencils: Prepared with letter sizes according to ASME A13.1 for piping; minimum letter height of 1-1/4 inches for ducts; and minimum letter height of 3/4 inch for access panel and door markers, equipment markers, equipment signs, and similar operational instructions.

1. Stencil Material: Metal or fiberboard, Aluminum, or Brass.
2. Stencil Paint: Exterior, gloss, acrylic enamel black, unless otherwise indicated. Paint may be in pressurized spray-can form.
3. Identification Paint: Exterior, acrylic enamel in colors according to ASME A13.1, unless otherwise indicated.

2.5 VALVE TAGS

A. Valve Tags: Stamped or engraved with 1/4-inch letters for piping system abbreviation and 1/2-inch numbers, with numbering scheme approved by Architect. Provide 5/32-inch hole for fastener.

1. Material: 0.032-inch thick brass or aluminum.
2. Material: 0.0375-inch thick stainless steel.
3. Material: 3/32-inch thick laminated plastic with 2 black surfaces and white inner layer.
4. Valve-Tag Fasteners: Brass wire-link or beaded chain; or S-hook.

2.6 VALVE SCHEDULES

A. Valve Schedules: For each piping system, on standard-size bond paper. Tabulate valve number, piping system, system abbreviation (as shown on valve tag), location of valve (room or space), normal-operating position (open, closed, or modulating), and variations for identification. Mark valves for emergency shutoff and similar special uses.

1. Valve-Schedule Frames: Glazed display frame for removable mounting on masonry walls for each page of valve schedule. Include mounting screws.
2. Frame: Extruded aluminum.
3. Glazing: ASTM C 1036, Type I, Class 1, Glazing Quality B, 2.5-mm, single-thickness glass.

2.7 WARNING TAGS

A. Warning Tags: Preprinted or partially preprinted, accident-prevention tags; of plasticized card stock with matte finish suitable for writing.

1. Size: 3 by 5-1/4 inches minimum.
2. Fasteners: Brass grommet and wire.
3. Nomenclature: Large-size primary caption such as DANGER, CAUTION, or DO NOT OPERATE.
4. Color: Yellow background with black lettering.

PART 3 - EXECUTION

3.1 APPLICATIONS, GENERAL

A. Products specified are for applications referenced in other Division 23 Sections. If more than single-type material, device, or label is specified for listed applications, selection is Installer's option.

3.2 EQUIPMENT IDENTIFICATION

A. Install and permanently fasten equipment nameplates on each major item of mechanical equipment that does not have nameplate or has nameplate that is damaged or located where

not easily visible. Locate nameplates where accessible and visible. Include nameplates for the following general categories of equipment:

1. Fuel-burning units, including boilers, furnaces, heaters, and stills.
2. Pumps, and similar motor-driven units.

B. Install equipment markers with permanent adhesive on or near each major item of mechanical equipment. Data required for markers may be included on signs, and markers may be omitted if both are indicated.

1. Letter Size: Minimum 1/4 inch for name of units if viewing distance is less than 24 inches, 1/2 inch for viewing distances up to 72 inches, and proportionately larger lettering for greater viewing distances. Include secondary lettering two-thirds to three-fourths the size of principal lettering.
2. Data: Distinguish among multiple units, indicate operational requirements, indicate safety and emergency precautions, warn of hazards and improper operations, and identify units.
3. Locate markers where accessible and visible. Include markers for the following general categories of equipment:

    a. Main control and operating valves, including safety devices and hazardous units such as gas outlets.
    b. Meters, gages, thermometers, and similar units.
    c. Fuel-burning units, including boilers, furnaces, and heaters.
    d. Pumps and similar motor-driven units.
    e. Strainers, filters, water-treatment systems, and similar equipment.

C. Stenciled Equipment Marker Option: Stenciled markers may be provided instead of laminated-plastic equipment markers, at Installer's option, if lettering larger than 1 inch high is needed for proper identification because of distance from normal location of required identification.

D. Install equipment signs with screws or permanent adhesive on or near each major item of mechanical equipment. Locate signs where accessible and visible.

1. Identify mechanical equipment with equipment markers in the following color codes:

    a. Green: For cooling equipment and components.
    b. Yellow: For heating equipment and components.
    c. Green and Yellow or Orange: For combination cooling and heating equipment and components.

2. Letter Size: Minimum 1/4 inch for name of units if viewing distance is less than 24 inches, 1/2 inch for viewing distances up to 72 inches, and proportionately larger lettering for greater viewing distances. Include secondary lettering two-thirds to three-fourths the size of principal lettering.
3. Data: Distinguish among multiple units, indicate operational requirements, indicate safety and emergency precautions, warn of hazards and improper operations, and identify units.
4. Include signs for the following general categories of equipment:

    a. Main control and operating valves, including safety devices and hazardous units such as gas outlets.
    b. Fuel-burning units, including boilers, furnaces, and heaters.
    c. Pumps and similar motor-driven units.
    d. Strainers, filters, water-treatment systems, and similar equipment.

E. Stenciled Equipment Sign Option: Stenciled signs may be provided instead of laminated-plastic equipment signs, at Installer's option, if lettering larger than 1 inch high is needed for proper identification because of distance from normal location of required identification.

F. Install access panel markers with screws on equipment access panels.

3.3 PIPING IDENTIFICATION

A. Install manufactured pipe markers indicating service on each piping system. Install with flow indication arrows showing direction of flow.

1. Pipes with OD, Including Insulation, Less Than 6 Inches: Pre-tensioned pipe markers. Use size to ensure a tight fit.
2. Pipes with OD, Including Insulation, Less Than 6 Inches: Self-adhesive pipe markers. Use color-coded, self-adhesive plastic tape at least 3/4 inch wide, lapped at least 1-1/2 inches at both ends of pipe marker, and covering full circumference of pipe.

B. Stenciled Pipe Marker Option: Stenciled markers may be provided instead of manufactured pipe markers, at Installer's option. Install stenciled pipe markers with painted, color-coded bands or rectangles complying with ASME A13.1 on each piping system.

1. Identification Paint: Use for contrasting background.
2. Stencil Paint: Use for pipe marking.

C. Locate pipe markers and color bands where piping is exposed in finished spaces; machine rooms; accessible maintenance spaces such as shafts, tunnels, and plenums; and exterior non-concealed locations as follows:

1. Near each valve and control device.
2. Near each branch connection, excluding short takeoffs for fixtures and terminal units. Where flow pattern is not obvious, mark each pipe at branch.
3. Near penetrations through walls, floors, ceilings, and non-accessible enclosures.
4. At access doors, manholes, and similar access points that permit view of concealed piping.
5. Near major equipment items and other points of origination and termination.
6. Spaced at maximum intervals of 50 feet along each run. Reduce intervals to 25 feet in areas of congested piping and equipment.
7. On piping above removable acoustical ceilings. Omit intermediately spaced markers.

3.4 DUCT IDENTIFICATION

A. Install duct markers with permanent adhesive on air ducts in the following color codes:
1. Yellow: For hot-air supply ducts.
2. Blue: For exhaust, outside, relief, return, and mixed-air ducts.
3. ASME A13.1 Colors and Designs: For hazardous material exhaust.
4. Letter Size: Minimum 1/4 inch for name of units if viewing distance is less than 24 inches, 1/2 inch for viewing distances up to 72 inches, and proportionately larger lettering for greater viewing distances. Include secondary lettering two-thirds to three-fourths the size of principal lettering.

B. Stenciled Duct Marker Option: Stenciled markers, showing service and direction of flow, may be provided instead of laminated-plastic duct markers, at Installer's option, if lettering larger than 1 inch high is needed for proper identification because of distance from normal location of required identification.

C. Locate markers near points where ducts enter into concealed spaces and at maximum intervals of 50 feet in each space where ducts are exposed or concealed by removable ceiling system.

3.5 WARNING-TAG INSTALLATION

A. Write required message on, and attach warning tags to, equipment and other items where required.

3.6 ADJUSTING

A. Relocate mechanical identification materials and devices that have become visually blocked by other work.

3.7 CLEANING

A. Clean faces of mechanical identification devices and glass frames of valve schedules.

END OF SECTION 230553

SECTION 230593 - TESTING, ADJUSTING, AND BALANCING FOR HVAC

PART 1 - GENERAL

1.1 RELATED DOCUMENTS

A. Drawings and general provisions of the Contract, including General and Supplementary Conditions and Division 01 Specification Sections, apply to this Section.

1.2 SUMMARY

A. Section Includes:

1. Balancing Air Systems:

   a. Constant-volume air systems.
   b. Variable-air-volume systems.

2. Additional Tests

   a. Seasonal tests.
   b. Sound testing.
   c. Vibration testing.
   d. Duct leakage testing.
   e. Controls verification.

1.3 DEFINITIONS

A. AABC: Associated Air Balance Council.

B. T&B: Testing, adjusting, and balancing.

C. T&B Agency: An independent entity certified by AABC to perform testing and balancing work.

D. TBE: AABC certified test and balance engineer.

E. TBT: AABC certified test and balance technician.

F. HVAC: Heating, ventilating, and air conditioning.

G. BAS: Building automation systems.

H. Contract documents: the mechanical drawings and test and balance specification.

I. NC: noise criteria

J. RC: room criteria

1.4 T&B INFORMATIONAL SUBMITTALS

A. Qualification Data: Within 30 days of Contractor's Notice to Proceed, submit documentation T&B of AABC certification of T&B agency and personnel, including a sample copy of the AABC "National Performance Guaranty." If not submitted within the timeframe specified, the engineer has the right to choose an AABC agency at the Contractor's expense.

B. Strategies and Procedures Plan: Within 30 days of Contractor's Notice to Proceed, submit T&B strategies and step-by-step procedures as specified in "Preparation" Article.

C. System Readiness Checklists: Within 30 days of Contractor's Notice to Proceed, submit system readiness checklists as specified in "Preparation" Article to be used and filled out by systems Installers verifying that systems are ready for T&B.

D. Examination Report: Within 30 days of Contractor's Notice to Proceed, provide a summary report of the examination review required in Part 3 "Examination", if issues are discovered that may preclude the proper testing and balancing of the systems.

E. Certified T&B reports: Within 14 days of completion of balancing work, submit AABC-certified T&B report.

1. Submit one copy of the final T&B Report directly to the design professional of record. Provide five additional copies to the contractor.

1.5 QUALITY ASSURANCE

A. T&B Agency Qualifications: Engage a T&B entity certified by AABC.

1. T&B Field Supervisor: Employee of the T&B Agency who is certified by AABC.
2. T&B Technician: Employee of the T&B Agency and who is certified by AABC as a TBT.

B. T&B Conference: If requested by the Engineer or Owner after approval of the T&B Agency's submittals, meet to develop a mutual understanding of the details. The T&B agency shall be provided a minimum of 14 days' advance notice of scheduled meeting time and location.

1. Agenda Items:

a. The examination report.
b. The Strategies and Procedures plan.
c. Systems readiness checklists.
d. Coordination and cooperation of trades and subcontractors.
e. Coordination of documentation and communication flow.

C. TBT shall perform the following:

1. Review field data reports to validate accuracy of data and to prepare certified T&B reports.
2. Certify that the T&B team complied with the approved T&B plan and the procedures specified and referenced in this Specification.
3. Certify the T&B report.

D. T&B Report Forms: Use approved forms submitted with the Strategies and Procedures Plan.

E. Instrumentation Type, Quantity, Accuracy, and Calibration: As described in the "AABC National Standards for Total System Balance."

1.6 PROJECT CONDITIONS

A. Full Owner Occupancy: Owner will occupy the site and existing building during entire T&B period. Cooperate with Owner during T&B operations to minimize conflicts with Owner's operations.

B. Partial Owner Occupancy: Owner may occupy completed areas of building before Substantial Completion. Cooperate with Owner during T&B operations to minimize conflicts with Owner's operations.

PART 2 - PRODUCTS (Not Applicable)

PART 3 - EXECUTION

3.1 T&B AGENCY

A. Subject to compliance with requirements, engage one of AABC certified T&B Agencies:

3.2 EXAMINATION

A. Examine the Contract Documents to become familiar with Project requirements and to discover conditions in systems' designs that may preclude proper T&B of systems and equipment.

B. Examine systems for installed balancing devices, such as test ports, gage cocks, thermometer wells, flow-control devices, balancing valves and fittings, and manual volume dampers. Note the locations of devices that are not accessible for testing and balancing.

C. Examine the approved submittals for HVAC systems and equipment.

D. Examine ceiling plenums and underfloor air plenums used for supply, return, or relief air to verify that are properly separated from adjacent areas. Verify that penetrations in plenum walls are sealed and fire-stopped if required.

E. Examine equipment performance data including fan and pump curves.

F. Examine HVAC equipment and verify that bearings are greased, belts are aligned and tight, clean permanent filters are installed, and equipment with functioning controls is ready for operation.

G. Examine terminal units, such as variable-air-volume boxes, and verify that they are accessible and their controls are connected, configured by the controls contractor, and functioning.

H. Examine strainers to verify that mechanical contractor has replaced startup screens with permanent screens and that all strainers have been cleaned.

I. Examine two-way valves for proper installation and function.

J. Examine three-way valves for proper installation for their intended function of diverting or mixing fluid flows.

K. Examine heat-transfer coils for correct piping connections and for clean and straight fins.

L. Examine air vents to verify that mechanical contractor has removed all air from all hydronic systems.

3.3 PREPARATION

A. Prepare a T&B plan that includes the following:

1. Equipment and systems to be tested.
2. Strategies and step-by-step procedures for balancing the systems.
3. Instrumentation to be used.
4. Sample forms with specific identification for all equipment.

B. Prepare system-readiness checklists, as described in the "AABC National Standards for Total System Balance," for use by systems installers in verifying system readiness for T&B. These shall include, at a minimum, the following:

1. Airside:

a. Ductwork is complete with terminals installed.
b. Volume, smoke and fire dampers are open and functional.
c. Clean filters are installed.
d. Fans are operating, free of vibration, and rotating in correct direction.
e. Variable-frequency controllers' start-up is complete, and safeties are verified.
f. Automatic temperature-control systems are operational.
g. Ceilings are installed.
h. Windows and doors are installed.
i. Suitable access to balancing devices and equipment is provided.

3.4 GENERAL PROCEDURES FOR TESTING AND BALANCING

A. Perform testing and balancing procedures on each system according to the procedures contained in AABC's "National Standards for Total System Balance" and in this Section.

B. Cut insulation, ducts, pipes, and equipment cabinets for installation of test probes to the minimum extent necessary for T&B procedures.

C. Mark equipment and balancing devices, including damper-control positions, valve position indicators, fan-speed-control levers, and similar controls and devices, with paint or other suitable, permanent identification material to show final settings.

D. Take and report testing and balancing measurements in inch-pound (IP)units.

3.5 GENERAL PROCEDURES FOR BALANCING AIR SYSTEMS

A. Prepare test reports for both fans and outlets. Obtain approved submittals and recommended testing procedures. Crosscheck the summation of required outlet volumes with required fan volumes.

B. Prepare single-line schematic diagram of systems for the purpose of identifying HVAC components.

C. For variable-air-volume systems, develop a plan to simulate diversity.

D. Determine the best locations in main and branch ducts for accurate duct-airflow measurements.

E. Locate start-stop and disconnect switches, electrical interlocks, and motor starters.

F. Verify that motor starters are equipped with properly sized thermal protection.

G. Check condensate drains for proper connections and functioning.

H. Check for proper sealing of air-handling-unit components.

3.6 PROCEDURES FOR CONSTANT-VOLUME AIR SYSTEMS

A. Adjust fans to deliver total indicated airflows within the maximum allowable fan speed listed by fan manufacturer.

1. Measure total airflow.

    a. Set outside air, return air and relief air dampers for proper position that simulates minimum outdoor air conditions.
    b. Where duct conditions allow, measure airflow by Pitot-tube traverse. If necessary, perform multiple Pitot-tube traverses to obtain total airflow.
    c. Where duct conditions are not suitable for Pitot-tube traverse measurements, a coil traverse may be acceptable.
    d. If a reliable Pitot-tube traverse or coil traverse is not possible, measure airflow at terminals and calculate the total airflow.

2. Measure fan static pressures as follows:

    a. Measure static pressure directly at the fan outlet or through the flexible connection.
    b. Measure static pressure directly at the fan inlet or through the flexible connection.
    c. Measure static pressure across each component that makes up the air-handling system.
    d. Report any artificial loading of filters at the time static pressures are measured.

3. Do not make fan-speed adjustments that result in motor overload. Consult equipment manufacturers about fan-speed safety factors. Modulate dampers and measure fan-motor amperage to ensure that no overload will occur. Measure amperage in full-cooling, full-heating, economizer, and any other operating mode to determine the maximum required brake horsepower.

B. Adjust volume dampers for main duct, submain ducts, and major branch ducts to indicated airflows.

1. Measure airflow of submain and branch ducts.
2. Adjust sub-main and branch duct volume dampers for specified airflow.
   Re-measure each sub-main and branch duct after all have been adjusted.

C. Adjust air inlets and outlets for each space to indicated airflows.

1. Set airflow patterns of adjustable outlets for proper distribution without drafts.
2. Measure airflow at all inlets and outlets.
3. Adjust each inlet and outlet for specified airflow.
4. Re-measure each inlet and outlet after all have been adjusted.

D. Verify final system conditions.

1. Re-measure and confirm minimum outdoor air, return and relief airflows are within design. Readjust to design if necessary.
2. Re-measure and confirm total airflow is within design.
3. Re-measure all final fan operating data, rpms, volts, amps, static profile.
4. Mark all final settings.
5. Test system in economizer mode. Verify proper operation and adjust, if necessary.
6. Measure and record all operating data.
7. Record final fan-performance data.

3.7 PROCEDURES FOR VARIABLE-AIR-VOLUME SYSTEMS

A. Adjust the variable-air-volume systems as follows:

1. Verify that the system static pressure sensor is located 2/3 of the distance down the duct from the fan discharge.
2. Verify that the system is under static pressure control.
3. Select the terminal unit that is most critical to the supply-fan airflow. Measure inlet static pressure, and adjust system static pressure control setpoint so the entering static pressure for the critical terminal unit is not less than the sum of the terminal-unit manufacturer's recommended minimum inlet static pressure plus the static pressure needed to overcome terminal-unit discharge system losses.
4. Calibrate and balance each terminal unit for maximum and minimum design airflow as follows

   a. Adjust controls so that terminal is calling for maximum airflow (note some controllers require starting with minimum airflow. Verify calibration procedure for specific project).
   b. Measure airflow and adjust calibration factor as required for design maximum airflow. Record calibration factor.
   c. When maximum airflow is correct, balance the air outlets downstream from terminal units.
   d. Adjust controls so that terminal is calling for minimum airflow.
   e. Measure airflow and adjust calibration factor as required for design minimum airflow. Record calibration factor. If no minimum calibration is available, note any deviation from design airflow.
   f. When in full cooling or full heating, ensure that there is no mixing of hot deck and cold deck airstreams unless so designed.

g. On constant volume terminals, in critical areas where room pressure is to be maintained, verify that the airflow remains constant over the full range of full cooling to full heating. Note any deviation from design airflow or room pressure.

5. After all terminals have been calibrated and balanced, test and adjust system for total airflow. Adjust fans to deliver total design airflows within the maximum allowable fan speed listed by fan manufacturer.

   a. Set outside air, return air and relief air dampers for proper position that simulates minimum outdoor air conditions.
   b. Set terminals for maximum airflow. If system design includes diversity, adjust terminals for maximum and minimum airflow so that connected total matches fan selection and simulates actual load in the building.
   c. Where duct conditions allow, measure airflow by Pitot-tube traverse. If necessary, perform multiple Pitot-tube traverses to obtain total airflow.
   d. Where duct conditions are not suitable for Pitot-tube traverse measurements, a coil traverse may be acceptable.
   e. If a reliable Pitot-tube traverse or coil traverse is not possible, measure airflow at terminals and calculate the total airflow.

6. Measure fan static pressures as follows:

   a. Measure static pressure directly at the fan outlet or through the flexible connection.
   b. Measure static pressure directly at the fan inlet or through the flexible connection.
   c. Measure static pressure across each component that makes up the air-handling system.
   d. Report any artificial loading of filters at the time static pressures are measured.

7. Set final return and outside airflow to the fan while operating at maximum return airflow and minimum outdoor airflow.

   a. Balance the return-air ducts and inlets the same as described for constant-volume air systems.
   b. Verify all terminal units are meeting design airflow under system maximum flow.

8. Re-measure the inlet static pressure at the most critical terminal unit and adjust the system static pressure setpoint to the most energy-efficient setpoint to maintain the optimum system static pressure. Record setpoint and give to controls contractor.
9. Verify final system conditions as follows:

   a. Re-measure and confirm minimum outdoor air, return and relief airflows are within design. Readjust to design if necessary.
   b. Re-measure and confirm total airflow is within design.
   c. Re-measure all final fan operating data, rpms, volts, amps, static profile.
   d. Mark all final settings.
   e. Test system in economizer mode. Verify proper operation and adjust, if necessary. Measure and record all operating data.
   f. Verify tracking between supply and return fans.

3.8 PROCEDURES FOR MOTORS

A. Motors, 1/2 HP and Larger: Test at final balanced conditions and record the following data:

1. Manufacturer's name, model number, and serial number.
2. Motor horsepower rating.
3. Motor rpm.
4. Phase/Hertz (Hz)
5. Nameplate and measured voltage, each phase.
6. Nameplate and measured amperage, each phase.
7. Starter size and thermal-protection-element rating.
8. Service factor and frame size.

B. Motors Driven by Variable-Frequency Controllers: Test the manual bypass of the controller to prove proper operation.

3.9 PROCEDURES FOR CONDENSING UNITS

A. Verify proper rotation of fans.

B. Measure entering- and leaving-air temperatures.

C. Record fan and motor operating data.

3.10 PROCEDURES FOR HEAT-TRANSFER COILS

A. Measure, adjust, and record the following data for each refrigerant coil:

1. Dry-bulb temperature of entering and leaving air.
2. Wet-bulb temperature of entering and leaving air.
3. Airflow.

3.11 TOLERANCES

A. Set HVAC system's air flow rates within the following tolerances:

1. Supply, Return, and Exhaust Fans and Equipment with Fans: Plus or minus 10 percent.
2. Air Outlets and Inlets: Plus or minus 10 percent.

B. Maintaining pressure relationships as designed shall have priority over the tolerances specified above.

3.12 FINAL TEST AND BALANCE REPORT

A. The report shall be a complete record of the HVAC system performance, including conditions of operation, items outstanding, and any deviations found during the T&B process. The final report also provides a reference of actual operating conditions for the owner and/or operations personnel. All measurements and test results that appear in the reports must be made on site and dated by the AABC technicians or test and balance engineers.

B. The report must be organized by systems and shall include the following information as a minimum:

1. Title Page:

   a. AABC certified company name
   b. Company address
   c. Company telephone number
   d. Project identification number
   e. Location
   f. Project Architect
   g. Project Engineer
   h. Project Contractor
   i. Project number
   j. Date of report
   k. AABC Certification Statement
   l. Name, signature, and certification number of AABC TBE

2. Table of Contents.
3. AABC National Performance Guaranty.
4. Report Summary:

   a. The summary shall include a list of items that do not meet design tolerances, with information that may be considered in resolving deficiencies.

5. Instrument List:

   a. Type.
   b. Manufacturer.
   c. Model.
   d. Serial Number.
   e. Calibration Date.

6. T&B Data:

   a. Provide test data for specific systems and equipment as required by the most recent edition of the "AABC National Standards."

C. One copy of the final test and balance report shall be sent directly to the engineer of record. Provide five additional copies to the contractor.

3.13 VERIFICATION OF T&B REPORT

A. Final Verification:

1. After testing and balancing is complete and accurately documented in the final report, request that a final verification be made by Engineer.
2. The T&B Agency shall conduct the verification in the presence of Engineer.
3. Engineer shall randomly select measurements, documented in the final report, to be rechecked. Rechecking shall be limited to either 10 percent of the total measurements recorded or the extent of measurements that can be accomplished in a normal 8-hour business day.

4. If rechecks yield measurements that differ from the measurements documented in the final report by more than the tolerances allowed, the measurements shall be noted as "FAILED."
5. If the number of "FAILED" measurements is greater than 10 percent of the total measurements checked during the final verification, the testing and balancing shall be considered incomplete.

3.14 REVERIFICATION

A. T&B Agency shall recheck all measurements and make adjustments as required to complete the balancing. Revise the final report and balancing device settings to include all changes; resubmit the final report and request a second verification.

B. If the second verification also fails, Owner/Engineer may contact AABC Headquarters regarding the AABC National Performance Guaranty.

3.15 ADDITIONAL TESTS

A. Seasonal Periods: If initial T&B procedures were not performed during near-peak conditions, the engineer may request a temperature recheck to further verify performance at near-peak conditions.

B. Sound Testing

1. After the systems are balanced and the spaces are architecturally complete, read and record sound levels at 10 locations as designated by the Engineer of record.
2. Instrumentation:

   a. The sound-testing meter shall be a portable, general-purpose testing meter consisting of a microphone, processing unit, and readout.
   b. The sound-testing meter shall be capable of showing fluctuations at minimum and maximum levels, and measuring the equivalent continuous sound pressure level (LEQ).
   c. The sound-testing meter must be capable of using 1/3 octave band filters to measure mid-frequencies from 31.5 HZ to 8000 HZ.
   d. The accuracy of the sound-testing meter shall be ±1 decibel.

3. Test Procedures

   a. Perform test at the quietest background noise period. Note any cause of unpreventable sound that may affect the test outcome.
   b. Equipment should be operating at design values.
   c. Calibrate the sound-testing meter prior to taking measurements.
   d. Use a microphone suitable for the type of noise levels measured that is compatible with the meter. Provide a windshield for outside or in-duct measurements.
   e. Record a set of background measurements in dB(A), and sound pressure levels in the eight un-weighted octave bands [63 HZ to 8000 HZ (NC)] with the equipment off.
   f. Take sound readings in dB(A), and sound pressure levels in the eight un-weighted octave bands [63 HZ to 8000 HZ (NC)] with the equipment on.

g. Take readings no closer than 3' from a wall or from the operating equipment, and approximately 5' from the floor, with the meter held or mounted on a tripod.
h. For outdoor measurements, move the sound-testing meter slowly and scan the area that has the greatest exposure to the noise source being tested. (This type of reading is generally performed using the A-Weighted scale).

4. Reporting

a. The report must record: the location, the system tested, the dB(A) reading, and the sound pressure level in each octave band with equipment on and off.
b. Plot all the sound pressure levels on the NC work sheet, with the equipment on and off.

C. Vibration Testing:

1. After the systems are balanced and the spaces are architecturally complete, read and record vibration levels on all equipment with motor horsepower equal to or greater than 10 hp.
2. Instrumentation:

a. The vibration meter should be portable, battery-operated, and microprocessor-controlled, with or without a built-in printer.
b. The meter shall automatically identify engineering units, filter bandwidth, amplitude and frequency scale values.
c. The meter shall be able to measure machine vibration displacement in mils of deflection, velocity in inches per second, and acceleration in inches per second squared.

3. Test Procedures:

a. Verify that the vibration meter calibration date is current before taking readings.
b. To ensure accurate readings, verify that the accelerometer has a clean, flat surface and is mounted properly.
c. With the unit running, set up the vibration meter in a safe, secure location. Connect the transducer to the meter with the proper cables. Hold the magnetic tip of the transducer on top of the bearing, and measure the unit in mils of deflection. Record the measurement, then move the transducer to the side of the bearing, and record in mils of deflection. Record an axial reading in mils of deflection by holding the nonmagnetic, pointed transducer tip on the end of the shaft.
d. Change the vibration meter to velocity (inches per second) measurements. Repeat and record the above measurements.
e. Record the CPM or the RPM.
f. Read each bearing on the motor, fan, and/or pump as required. Track and record vibration levels from the rotating component through the casing to the base.

4. Reporting

a. The report must record the location and the system tested.
b. Include horizontal-vertical-axial measurements for all tests.
c. Verify that vibration limits follow specifications, or, if not specified, follow the "General Machinery Vibration Severity Chart" or "Vibration Acceleration General Severity Chart" from the AABC National Standards. Acceptable levels of vibration are normally "Smooth" to "Good."

d. Include in the report the Machinery Vibration Severity Chart, with conditions plotted.

D. Duct Leakage Testing:

1. Witness the duct pressure testing performed by the mechanical/installing contractor.
2. Verify that proper test methods are used and that leakage rates are within specified tolerances.
3. Report any deficiencies observed.

E. Controls Verification

1. In conjunction with system balancing perform the following:

a. Work with the temperature control contractor to ensure the system is operating within the design limitations and gain a mutual understanding of intended control performance.
b. Confirm that the sequences of operation are in compliance with the approved drawings.
c. Verify that controllers are calibrated and function as intended.
d. Verify that controller setpoints are as specified.
e. Verify the operation of lockout or interlock systems.
f. Verify the operation of all valve and damper actuators.
g. Verify that all controlled devices are properly installed and connected to the correct controller.
h. Verify that all controlled devices travel freely and are in the position indicated by the controller: open, closed, or modulating.
i. Verify the location and installation of all sensors to ensure they will sense only the intended temperatures, humidities, or pressures.

2. Reporting

a. The report shall include a summary of verifications performed, remaining deficiencies, and any variations from specified conditions.

END OF SECTION 230593

SECTION 230713 – DUCT INSULATION

PART 1 - GENERAL

1.1 RELATED DOCUMENTS

A. Drawings and general provisions of the Contract, including General and Supplementary Conditions and Division 01 Specification Sections, apply to this Section.

1.2 SUMMARY

A. Section includes insulating the following duct services:

1. Indoor, concealed supply and return air.

2. Indoor, concealed return located in unconditioned space.

Related Sections:

3. Section 233113 "Metal Ducts" for duct liners.

1.3 ACTION SUBMITTALS

A. Product Data: For each type of product indicated. Include thermal conductivity, water-vapor permeance thickness, and jackets (both factory- and field-applied if any).

B. Shop Drawings: Include plans, elevations, sections, details, and attachments to other work.

1. Detail application of protective shields, saddles, and inserts at hangers for each type of insulation and hanger.

2. Detail insulation application at elbows, fittings, dampers, specialties and flanges for each type of insulation.

3. Detail application of field-applied jackets.

4. Detail application at linkages of control devices.

1.4 INFORMATIONAL SUBMITTALS

A. Qualification Data: For qualified Installer.

B. Material Test Reports: From a qualified testing agency acceptable to authorities having jurisdiction indicating, interpreting, and certifying test results for compliance of insulation materials, sealers, attachments, cements, and jackets, with requirements indicated. Include dates of tests and test methods employed.

C. Field quality-control reports.

1.5 QUALITY ASSURANCE

A. Installer Qualifications: Skilled mechanics who have successfully completed an apprenticeship program or another craft training program certified by the Department of Labor, Bureau of Apprenticeship and Training.

B. Surface-Burning Characteristics: For insulation and related materials, as determined by testing identical products according to ASTM E 84, by a testing agency acceptable to authorities having jurisdiction. Factory label insulation and jacket materials and adhesive, mastic, tapes, and cement material containers, with appropriate markings of applicable testing agency.

1. Insulation Installed Indoors: Flame-spread index of 25 or less, and smoke-developed index of 50 or less.

1.6 DELIVERY, STORAGE, AND HANDLING

A. Packaging: Insulation material containers shall be marked by manufacturer with appropriate ASTM standard designation, type and grade, and maximum use temperature.

1.7 COORDINATION

A. Coordinate sizes and locations of supports, hangers, and insulation shields specified in Section 230529 "Hangers and Supports for HVAC Piping and Equipment."

B. Coordinate clearance requirements with duct Installer for duct insulation application. Before preparing ductwork Shop Drawings, establish and maintain clearance requirements for installation of insulation and field-applied jackets and finishes and for space required for maintenance.

1.8 SCHEDULING

A. Schedule insulation application after pressure testing systems and, where required, after installing and testing heat tracing. Insulation application may begin on segments that have satisfactory test results.

B. Complete installation and concealment of plastic materials as rapidly as possible in each area of construction.

PART 2 - PRODUCTS

2.1 INSULATION MATERIALS

A. Products shall not contain asbestos, lead, mercury, or mercury compounds.

B. Products that come in contact with stainless steel shall have a leachable chloride content of less than 50 ppm when tested according to ASTM C 871.

C. Mineral-Fiber Blanket Insulation: Mineral or glass fibers bonded with a thermosetting resin. Comply with ASTM C 553, Type II and ASTM C 1290, factory-applied FSK jacket/FSP jacket. Factory-applied jacket requirements are specified in "Factory-Applied Jackets" Article.

2.2 ADHESIVES

A. Materials shall be compatible with insulation materials, jackets, and substrates and for bonding insulation to itself and to surfaces to be insulated unless otherwise indicated.

B. Mineral-Fiber Adhesive: Comply with MIL-A-3316C, Class 2, Grade A.

1. For indoor applications, adhesive shall have a VOC content of 80 g/L or less when calculated according to 40 CFR 59, Subpart D (EPA Method 24).

2. Adhesive shall comply with the testing and product requirements of the California Department of Health Services' "Standard Practice for the Testing of Volatile Organic Emissions from Various Sources Using Small-Scale Environmental Chambers."

C. ASJ Adhesive, and FSK Jacket Adhesive: Comply with MIL-A-3316C, Class 2, Grade A for bonding insulation jacket lap seams and joints.

1. For indoor applications, adhesive shall have a VOC content of 50 g/L or less when calculated according to 40 CFR 59, Subpart D (EPA Method 24).

2. Adhesive shall comply with the testing and product requirements of the California Department of Health Services' "Standard Practice for the Testing of Volatile Organic Emissions from Various Sources Using Small-Scale Environmental Chambers."

2.3 MASTICS

A. Materials shall be compatible with insulation materials, jackets, and substrates; comply with MIL-PRF-19565C, Type II.

1. For indoor applications, use mastics that have a VOC content of 50 g/L or less when calculated according to 40 CFR 59, Subpart D (EPA Method 24).

B. Vapor-Barrier Mastic: Water based; suitable for indoor use on below ambient services.

1. Water-Vapor Permeance: ASTM E 96/E 96M, Procedure B, 0.013 perm (0.009 metric perm) at 43-mil (1.09-mm) dry film thickness.

2. Service Temperature Range: Minus 20 to plus 180 deg F (Minus 29 to plus 82 deg C).

3. Solids Content: ASTM D 1644, 58 percent by volume and 70 percent by weight.

4. Color: White.

C. Vapor-Barrier Mastic: Solvent based; suitable for indoor use on below ambient services.

1. Water-Vapor Permeance: ASTM F 1249, 0.05 perm (0.03 metric perm) at 35-mil (0.9-mm) dry film thickness.

2. Service Temperature Range: 0 to 180 deg F (Minus 18 to plus 82 deg C).

3. Solids Content: ASTM D 1644, 44 percent by volume and 62 percent by weight.

4. Color: White.

2.4 LAGGING ADHESIVES

A. Description: Comply with MIL-A-3316C, Class I, Grade A and shall be compatible with insulation materials, jackets, and substrates.

1. For indoor applications, use lagging adhesives that have a VOC content of 50 g/L or less when calculated according to 40 CFR 59, Subpart D (EPA Method 24).

2. Fire-resistant, water-based lagging adhesive and coating for use indoors to adhere fire-resistant lagging cloths over duct insulation.

3. Service Temperature Range: 0 to plus 180 deg F (Minus 18 to plus 82 deg C).

4. Color: White.

2.5 SEALANTS

A. FSK and Metal Jacket Flashing Sealants:

1. Materials shall be compatible with insulation materials, jackets, and substrates.

2. Fire- and water-resistant, flexible, elastomeric sealant.

3. Service Temperature Range: Minus 40 to plus 250 deg F (Minus 40 to plus 121 deg C).

4. Color: Aluminum.

5. For indoor applications, sealants shall have a VOC content of 420 g/L or less when calculated according to 40 CFR 59, Subpart D (EPA Method 24).

6. Sealants shall comply with the testing and product requirements of the California Department of Health Services' "Standard Practice for the Testing of Volatile Organic Emissions from Various Sources Using Small-Scale Environmental Chambers."

B. ASJ Flashing Sealants, and Vinyl and PVC Jacket Flashing Sealants:

1. Materials shall be compatible with insulation materials, jackets, and substrates.

2. Fire- and water-resistant, flexible, elastomeric sealant.

3. Service Temperature Range: Minus 40 to plus 250 deg F (Minus 40 to plus 121 deg C).

4. Color: White.

5. For indoor applications, sealants shall have a VOC content of 420 g/L or less when calculated according to 40 CFR 59, Subpart D (EPA Method 24).

6. Sealants shall comply with the testing and product requirements of the California Department of Health Services' "Standard Practice for the Testing of Volatile Organic Emissions from Various Sources Using Small-Scale Environmental Chambers."

2.6 FACTORY-APPLIED JACKETS

A. Insulation system schedules indicate factory-applied jackets on various applications. When factory-applied jackets are indicated, comply with the following:

1. ASJ: White, kraft-paper, fiberglass-reinforced scrim with aluminum-foil backing; complying with ASTM C 1136, Type I.

2. ASJ-SSL: ASJ with self-sealing, pressure-sensitive, acrylic-based adhesive covered by a removable protective strip; complying with ASTM C 1136, Type I.

3. FSK Jacket: Aluminum-foil, fiberglass-reinforced scrim with kraft-paper backing; complying with ASTM C 1136, Type II.

4. FSP Jacket: Aluminum-foil, fiberglass-reinforced scrim with polyethylene backing; complying with ASTM C 1136, Type II.

5. Vinyl Jacket: White vinyl with a permeance of 1.3 perms (0.86 metric perm) when tested according to ASTM E 96/E 96M, Procedure A, and complying with NFPA 90A and NFPA 90B.

2.7 TAPES

A. ASJ Tape: White vapor-retarder tape matching factory-applied jacket with acrylic adhesive, complying with ASTM C 1136.

1. Width: 3 inches (75 mm).

2. Thickness: 11.5 mils (0.29 mm).

3. Adhesion: 90 ounces force/inch (1.0 N/mm) in width.

4. Elongation: 2 percent.

5. Tensile Strength: 40 lbf/inch (7.2 N/mm) in width.

6. ASJ Tape Disks and Squares: Precut disks or squares of ASJ tape.

B. FSK Tape: Foil-face, vapor-retarder tape matching factory-applied jacket with acrylic adhesive; complying with ASTM C 1136.

1. Width: 3 inches (75 mm).

2. Thickness: 6.5 mils (0.16 mm).

3. Adhesion: 90 ounces force/inch (1.0 N/mm) in width.

4. Elongation: 2 percent.

5. Tensile Strength: 40 lbf/inch (7.2 N/mm) in width.

6. FSK Tape Disks and Squares: Precut disks or squares of FSK tape.

C. PVC Tape: White vapor-retarder tape matching field-applied PVC jacket with acrylic adhesive; suitable for indoor and outdoor applications.

1. Width: 2 inches (50 mm).

2. Thickness: 6 mils (0.15 mm).

3. Adhesion: 64 ounces force/inch (0.7 N/mm) in width.

4. Elongation: 500 percent.

5. Tensile Strength: 18 lbf/inch (3.3 N/mm) in width.

D. Aluminum-Foil Tape: Vapor-retarder tape with acrylic adhesive.

1. Width: 2 inches (50 mm).

2. Thickness: 3.7 mils (0.093 mm).

3. Adhesion: 100 ounces force/inch (1.1 N/mm) in width.

4. Elongation: 5 percent.

5. Tensile Strength: 34 lbf/inch (6.2 N/mm) in width.

2.8 SECUREMENTS

A. Bands:

1. Stainless Steel: ASTM A 167 or ASTM A 240/A 240M, Type 304

2. Springs: Twin spring set constructed of stainless steel with ends flat and slotted to accept metal bands. Spring size determined by manufacturer for application.

B. Insulation Pins and Hangers:

1. Capacitor-Discharge-Weld Pins: Copper- or zinc-coated steel pin, fully annealed for capacitor-discharge welding, 0.135-inch- (3.5-mm-) diameter shank, length to suit depth of insulation indicated.

2. Metal, Adhesively Attached, Perforated-Base Insulation Hangers: Baseplate welded to projecting spindle that is capable of holding insulation, of thickness indicated, securely in position indicated when self-locking washer is in place. Comply with the following requirements:

a. Baseplate: Perforated, galvanized carbon-steel sheet, 0.030 inch (0.76 mm) thick by 2 inches (50 mm) square.

b. Spindle: Copper- or zinc-coated, low-carbon steel/Aluminum, fully annealed, 0.106-inch- (2.6-mm-) diameter shank, length to suit depth of insulation indicated.
c. Adhesive: Recommended by hanger manufacturer. Product with demonstrated capability to bond insulation hanger securely to substrates indicated without damaging insulation, hangers, and substrates.

3. Insulation-Retaining Washers: Self-locking washers formed from 0.016-inch- (0.41-mm-) thick, galvanized-steel/aluminum sheet, with beveled edge sized as required to hold insulation securely in place but not less than 1-1/2 inches (38 mm) in diameter.

a. Protect ends with capped self-locking washers incorporating a spring steel insert to ensure permanent retention of cap in exposed locations.

C. Staples: Outward-clinching insulation staples, nominal 3/4-inch- (19-mm-) wide, stainless steel or Monel.

D. Wire: 0.080-inch (2.0-mm) soft-annealed, galvanized steel.

PART 3 - EXECUTION

3.1 EXAMINATION

A. Examine substrates and conditions for compliance with requirements for installation tolerances and other conditions affecting performance of insulation application.

1. Verify that systems to be insulated have been tested and are free of defects.

2. Verify that surfaces to be insulated are clean and dry.

B. Proceed with installation only after unsatisfactory conditions have been corrected.

3.2 PREPARATION

A. Surface Preparation: Clean and dry surfaces to receive insulation. Remove materials that will adversely affect insulation application.

3.3 GENERAL INSTALLATION REQUIREMENTS

A. Install insulation materials, accessories, and finishes with smooth, straight, and even surfaces; free of voids throughout the length of ducts and fittings.

B. Install insulation materials, vapor barriers or retarders, jackets, and thicknesses required for each item of duct system as specified in insulation system schedules.

C. Install accessories compatible with insulation materials and suitable for the service. Install accessories that do not corrode, soften, or otherwise attack insulation or jacket in either wet or dry state.

D. Install insulation with longitudinal seams at top and bottom of horizontal runs.

E. Install multiple layers of insulation with longitudinal and end seams staggered.

F. Keep insulation materials dry during application and finishing.

G. Install insulation with tight longitudinal seams and end joints. Bond seams and joints with adhesive recommended by insulation material manufacturer.

H. Install insulation with least number of joints practical.

I. Where vapor barrier is indicated, seal joints, seams, and penetrations in insulation at hangers, supports, anchors, and other projections with vapor-barrier mastic.

1. Install insulation continuously through hangers and around anchor attachments.

2. For insulation application where vapor barriers are indicated, extend insulation on anchor legs from point of attachment to supported item to point of attachment to structure. Taper and seal ends at attachment to structure with vapor-barrier mastic.

3. Install insert materials and install insulation to tightly join the insert. Seal insulation to insulation inserts with adhesive or sealing compound recommended by insulation material manufacturer.

J. Apply adhesives, mastics, and sealants at manufacturer's recommended coverage rate and wet and dry film thicknesses.

K. Install insulation with factory-applied jackets as follows:

1. Draw jacket tight and smooth.

2. Cover circumferential joints with 3-inch- (75-mm-) wide strips, of same material as insulation jacket. Secure strips with adhesive and outward clinching staples along both edges of strip, spaced 4 inches (100 mm) o.c.

3. Overlap jacket longitudinal seams at least 1-1/2 inches (38 mm). Clean and dry surface to receive self-sealing lap. Staple laps with outward clinching staples along edge at 2 inches (50 mm) o.c.

a. For below ambient services, apply vapor-barrier mastic over staples.

4. Cover joints and seams with tape, according to insulation material manufacturer's written instructions, to maintain vapor seal.

5. Where vapor barriers are indicated, apply vapor-barrier mastic on seams and joints and at ends adjacent to duct flanges and fittings.

L. Cut insulation in a manner to avoid compressing insulation more than 75 percent of its nominal thickness.

M. Finish installation with systems at operating conditions. Repair joint separations and cracking due to thermal movement.

N. Repair damaged insulation facings by applying same facing material over damaged areas. Extend patches at least 4 inches (100 mm) beyond damaged areas. Adhere, staple, and seal patches similar to butt joints.

3.4 PENETRATIONS

A. Insulation Installation at Roof Penetrations: Install insulation continuously through roof penetrations.

1. Seal penetrations with flashing sealant.

2. For applications requiring only indoor insulation, terminate insulation above roof surface and seal with joint sealant. For applications requiring indoor and outdoor insulation, install insulation for outdoor applications tightly joined to indoor insulation ends. Seal joint with joint sealant.

3. Extend jacket of outdoor insulation outside roof flashing at least 2 inches (50 mm) below top of roof flashing.

4. Seal jacket to roof flashing with flashing sealant.

B. Insulation Installation at Interior Wall and Partition Penetrations (That Are Not Fire Rated): Install insulation continuously through walls and partitions.

C. Insulation Installation at Fire-Rated Wall and Partition Penetrations: Terminate insulation at fire damper sleeves for fire-rated wall and partition penetrations. Externally insulate damper sleeves to match adjacent insulation and overlap duct insulation at least 2 inches (50 mm).

1. Comply with requirements in Section 078413 "Penetration Firestopping" for firestopping.

3.5 INSTALLATION OF MINERAL-FIBER INSULATION

A. Blanket Insulation Installation on Ducts and Plenums: Secure with adhesive and insulation pins.

1. Apply adhesives according to manufacturer's recommended coverage rates per unit area, for 100 percent coverage of duct and plenum surfaces.

2. Apply adhesive to entire circumference of ducts and to all surfaces of fittings and transitions.

3. Install either capacitor-discharge-weld pins and speed washers or cupped-head, capacitor-discharge-weld pins on sides and bottom of horizontal ducts and sides of vertical ducts as follows:

a. On duct sides with dimensions 18 inches (450 mm) and smaller, place pins along longitudinal centerline of duct. Space 3 inches (75 mm) maximum from insulation end joints, and 16 inches (400 mm) o.c.
b. On duct sides with dimensions larger than 18 inches (450 mm), place pins 16 inches (400 mm) o.c. each way, and 3 inches (75 mm) maximum from

insulation joints. Install additional pins to hold insulation tightly against surface at cross bracing.

c. Pins may be omitted from top surface of horizontal, rectangular ducts and plenums.
d. Do not overcompress insulation during installation.
e. Impale insulation over pins and attach speed washers.
f. Cut excess portion of pins extending beyond speed washers or bend parallel with insulation surface. Cover exposed pins and washers with tape matching insulation facing.

4. For ducts and plenums with surface temperatures below ambient, install a continuous unbroken vapor barrier. Create a facing lap for longitudinal seams and end joints with insulation by removing 2 inches (50 mm) from one edge and one end of insulation segment. Secure laps to adjacent insulation section with 1/2-inch (13-mm) outward-clinching staples, 1 inch (25 mm) o.c. Install vapor barrier consisting of factory- or field-applied jacket, adhesive, vapor-barrier mastic, and sealant at joints, seams, and protrusions.

   a. Repair punctures, tears, and penetrations with tape or mastic to maintain vapor-barrier seal.
   b. Install vapor stops for ductwork and plenums operating below 50 deg F (10 deg C) at 18-foot (5.5-m) intervals. Vapor stops shall consist of vapor-barrier mastic applied in a Z-shaped pattern over insulation face, along butt end of insulation, and over the surface. Cover insulation face and surface to be insulated a width equal to two times the insulation thickness, but not less than 3 inches (75 mm).

5. Overlap unfaced blankets a minimum of 2 inches (50 mm) on longitudinal seams and end joints. At end joints, secure with steel bands spaced a maximum of 18 inches (450 mm) o.c.

6. Install insulation on rectangular duct elbows and transitions with a full insulation section for each surface. Install insulation on round and flat-oval duct elbows with individually mitered gores cut to fit the elbow.

7. Insulate duct stiffeners, hangers, and flanges that protrude beyond insulation surface with 6-inch- (150-mm-) wide strips of same material used to insulate duct. Secure on alternating sides of stiffener, hanger, and flange with pins spaced 6 inches (150 mm) o.c.

3.6 FIELD QUALITY CONTROL

A. Testing Agency: Engage a qualified testing agency to perform tests and inspections.

B. Perform tests and inspections.

C. Tests and Inspections:

1. Inspect ductwork, randomly selected by Engineer, by removing field-applied jacket and insulation in layers in reverse order of their installation. Extent of inspection shall be limited to one location(s) for each duct system defined in the "Duct Insulation Schedule, General" Article.

D. All insulation applications will be considered defective Work if sample inspection reveals noncompliance with requirements.

3.7 FINISHES

A. Duct, Equipment, and Pipe Insulation with ASJ, Glass-Cloth, or Other Paintable Jacket Material: Paint jacket with paint system identified below.

1. Flat Acrylic Finish: Two finish coats over a primer that is compatible with jacket material and finish coat paint. Add fungicidal agent to render fabric mildew proof.

a. Finish Coat Material: Interior, flat, latex-emulsion size.

B. Flexible Elastomeric Thermal Insulation: After adhesive has fully cured, apply two coats of insulation manufacturer's recommended protective coating.

C. Color: Final color as selected by Architect. Vary first and second coats to allow visual inspection of the completed Work.

D. Do not field paint aluminum or stainless-steel jackets.

3.8 DUCT INSULATION SCHEDULE, GENERAL

A. Plenums and Ducts Requiring Insulation:

1. Indoor, concealed supply and outdoor air.

2. Indoor, exposed supply and outdoor air.

3. Indoor, concealed return located in nonconditioned space.

4. Indoor, exposed return located in nonconditioned space.

5. Indoor, concealed, Type I, commercial, kitchen hood exhaust.

6. Indoor, exposed, Type I, commercial, kitchen hood exhaust.

B. Items Not Insulated:

1. Metal ducts with duct liner of sufficient thickness to comply with energy code and ASHRAE/IESNA 90.1.

2. Factory-insulated flexible ducts.

3. Factory-insulated plenums and casings.

4. Flexible connectors.

5. Vibration-control devices.

6. Factory-insulated access panels and doors.

3.9 INDOOR DUCT AND PLENUM INSULATION SCHEDULE

A. Concealed, rectangular, round, and flat-oval, supply-air/return-air duct insulation shall be any o] the following:

1. Mineral-Fiber Blanket: 2 inches thick and 1.5 lb./cu. ft. nominal density, with Minimum R-8 Value.

2. Mineral-Fiber Board: 2 inches thick and 2-lb/cu. ft. nominal density, with Minimum R-8 Value.

B. Concealed, rectangular, round, and flat-oval, outdoor-air duct insulation shall be any of the following:

1. Mineral-Fiber Blanket: 2 inches thick and 3-lb/cu. ft. nominal density, with Minimum R-8 Value.

2. Mineral-Fiber Board: 2 inches thick and 3-lb/cu. ft. nominal density, with Minimum R-8 Value.

C. Exposed, rectangular, supply-air/return-air duct insulation shall be any of the following:

1. Mineral-Fiber Blanket: 2 inches thick and 1.5-lb/cu. ft. nominal density, with Minimum R-8 Value.

2. Mineral-Fiber Board: 2 inches thick and 2-lb/cu. ft. nominal density, with Minimum R-8 Value.

END OF SECTION 230713

SECTION 230719 - HVAC PIPING INSULATION

PART 1 - GENERAL

1.1 RELATED DOCUMENTS

A. Drawings and general provisions of the Contract, including General and Supplementary Conditions and Division 01 Specification Sections, apply to this Section.

1.2 SUMMARY

A. Section includes insulating the following HVAC piping systems:

1. Condensate Drain Piping
2. Refrigerant suction and hot-gas piping.

B. Related Sections:

1. Section 230713 "Duct Insulation."

1.3 ACTION SUBMITTALS

A. Product Data: For each type of product indicated. Include thermal conductivity, water-vapor permeance thickness, and jackets (both factory and field applied if any).

B. Shop Drawings: Include plans, elevations, sections, details, and attachments to other work.

1. Detail application of protective shields, saddles, and inserts at hangers for each type of insulation and hanger.
2. Detail attachment and covering of heat tracing inside insulation.
3. Detail insulation application at pipe expansion joints for each type of insulation.
4. Detail insulation application at elbows, fittings, flanges, valves, and specialties for each type of insulation.
5. Detail removable insulation at piping specialties.
6. Detail application of field-applied jackets.
7. Detail application at linkages of control devices.

C. Samples: For each type of insulation and jacket indicated. Identify each Sample, describing product and intended use.

1. Preformed Pipe Insulation Materials: 12 inches (300 mm) long by NPS 2 (DN 50).
2. Sheet Form Insulation Materials: 12 inches (300 mm) square.
3. Jacket Materials for Pipe: 12 inches (300 mm) long by NPS 2 (DN 50).
4. Sheet Jacket Materials: 12 inches (300 mm) square.
5. Manufacturer's Color Charts: For products where color is specified, show the full range of colors available for each type of finish material.

1.4 INFORMATIONAL SUBMITTALS

A. Qualification Data: For qualified Installer.

B. Material Test Reports: From a qualified testing agency acceptable to authorities having jurisdiction indicating, interpreting, and certifying test results for compliance of insulation materials, sealers, attachments, cements, and jackets, with requirements indicated. Include dates of tests and test methods employed.

C. Field quality-control reports.

1.5 QUALITY ASSURANCE

A. Installer Qualifications: Skilled mechanics who have successfully completed an apprenticeship program or another craft training program certified by the Department of Labor, Bureau of Apprenticeship and Training.

B. Surface-Burning Characteristics: For insulation and related materials, as determined by testing identical products according to ASTM E 84, by a testing and inspecting agency acceptable to authorities having jurisdiction. Factory label insulation and jacket materials and adhesive, mastic, tapes, and cement material containers, with appropriate markings of applicable testing agency.

1. Insulation Installed Indoors: Flame-spread index of 25 or less, and smoke-developed index of 50 or less.
2. Insulation Installed Outdoors: Flame-spread index of 75 or less, and smoke-developed index of 150 or less.

1.6 DELIVERY, STORAGE, AND HANDLING

A. Packaging: Insulation material containers shall be marked by manufacturer with appropriate ASTM standard designation, type and grade, and maximum use temperature.

1.7 COORDINATION

A. Coordinate sizes and locations of supports, hangers, and insulation shields specified in Section 230529 "Hangers and Supports for HVAC Piping and Equipment."

B. Coordinate clearance requirements with piping Installer for piping insulation application. Before preparing piping Shop Drawings, establish and maintain clearance requirements for installation of insulation and field-applied jackets and finishes and for space required for maintenance.

1.8 SCHEDULING

A. Schedule insulation application after pressure testing systems and, where required, after installing and testing heat tracing. Insulation application may begin on segments that have satisfactory test results.

B. Complete installation and concealment of plastic materials as rapidly as possible in each area of construction.

PART 2 - PRODUCTS

2.1 INSULATION MATERIALS

A. Products shall not contain asbestos, lead, mercury, or mercury compounds.

B. Foam insulation materials shall not use CFC or HCFC blowing agents in the manufacturing process.
   1. Prefabricated Fitting Covers: Comply with ASTM C 450 and ASTM C 585 for dimensions used in preforming insulation to cover valves, elbows, tees, and flanges.

C. Cellular Glass: Inorganic, incombustible, foamed or cellulated glass with annealed, rigid, hermetically sealed cells. Factory-applied jacket requirements are specified in "Factory-Applied Jackets" Article.
   1. Block Insulation: ASTM C 552, Type I.
   2. Special-Shaped Insulation: ASTM C 552, Type III.
   3. Board Insulation: ASTM C 552, Type IV.
   4. Preformed Pipe Insulation without Jacket: Comply with ASTM C 552, Type II, Class 1.
   5. Preformed Pipe Insulation with Factory-Applied ASJ: Comply with ASTM C 552, Type II, Class 2.
   6. Factory fabricate shapes according to ASTM C 450 and ASTM C 585.

D. Mineral-Fiber Blanket Insulation: Mineral or glass fibers bonded with a thermosetting resin. Comply with ASTM C 553, Type II and ASTM C 1290, with factory-applied FSK jacket/FSP jacket. Factory-applied jacket requirements are specified in "Factory-Applied Jackets" Article.

E. Mineral-Fiber, Preformed Pipe Insulation:

   1. Type I, 850 deg F (454 deg C) Materials: Mineral or glass fibers bonded with a thermosetting resin. Comply with ASTM C 547, Type I, Grade A, with factory-applied ASJ. Factory-applied jacket requirements are specified in "Factory-Applied Jackets" Article.

F. Mineral-Fiber, Pipe Insulation Wicking System: Preformed pipe insulation complying with ASTM C 547, Type I, Grade A, with absorbent cloth factory-applied to the entire inside surface of preformed pipe insulation and extended through the longitudinal joint to outside surface of insulation under insulation jacket. Factory apply a white, polymer, vapor-retarder jacket with self-sealing adhesive tape seam and evaporation holes running continuously along the longitudinal seam, exposing the absorbent cloth.

G. Mineral-Fiber, Pipe and Tank Insulation: Mineral or glass fibers bonded with a thermosetting resin. Semirigid board material with factory-applied ASJ/FSK jacket complying with ASTM C 1393, Type II or Type IIIA Category 2, or with properties similar to ASTM C 612, Type IB. Nominal density is 2.5 lb/cu. ft. (40 kg/cu. m) or more. Thermal conductivity (k-value) at 100 deg F (55 deg C) is 0.29 Btu x in./h x sq. ft. x deg F (0.042 W/m x K) or less. Factory-applied jacket requirements are specified in "Factory-Applied Jackets" Article.

2.2 ADHESIVES

A. Materials shall be compatible with insulation materials, jackets, and substrates and for bonding insulation to itself and to surfaces to be insulated unless otherwise indicated.

B. Cellular-Glass Adhesive: Two-component, thermosetting urethane adhesive containing no flammable solvents, with a service temperature range of minus 100 to plus 200 deg F (minus 73 to plus 93 deg C).

1. For indoor applications, adhesive shall have a VOC content of 50 g/L or less when calculated according to 40 CFR 59, Subpart D (EPA Method 24).
2. Adhesive shall comply with the testing and product requirements of the California Department of Health Services' "Standard Practice for the Testing of Volatile Organic Emissions from Various Sources Using Small-Scale Environmental Chambers."

C. Phenolic and Polyisocyanurate Adhesive: Solvent-based resin adhesive, with a service temperature range of minus 75 to plus 300 deg F (minus 59 to plus 149 deg C).

1. For indoor applications, adhesive shall have a VOC content of 50 g/L or less when calculated according to 40 CFR 59, Subpart D (EPA Method 24).
2. Adhesive shall comply with the testing and product requirements of the California Department of Health Services' "Standard Practice for the Testing of Volatile Organic Emissions from Various Sources Using Small-Scale Environmental Chambers."

D. Mineral-Fiber Adhesive: Comply with MIL-A-3316C, Class 2, Grade A.

1. For indoor applications, adhesive shall have a VOC content of 80 g/L or less when calculated according to 40 CFR 59, Subpart D (EPA Method 24).
2. Adhesive shall comply with the testing and product requirements of the California Department of Health Services' "Standard Practice for the Testing of Volatile Organic Emissions from Various Sources Using Small-Scale Environmental Chambers."

E. ASJ Adhesive, and FSK and PVDC Jacket Adhesive: Comply with MIL-A-3316C, Class 2, Grade A for bonding insulation jacket lap seams and joints.

1. For indoor applications, adhesive shall have a VOC content of 50 g/L or less when calculated according to 40 CFR 59, Subpart D (EPA Method 24).
2. Adhesive shall comply with the testing and product requirements of the California Department of Health Services' "Standard Practice for the Testing of Volatile Organic Emissions from Various Sources Using Small-Scale Environmental Chambers."

F. PVC Jacket Adhesive: Compatible with PVC jacket.

1. For indoor applications, adhesive shall have a VOC content of 50 g/L or less when calculated according to 40 CFR 59, Subpart D (EPA Method 24).
2. Adhesive shall comply with the testing and product requirements of the California Department of Health Services' "Standard Practice for the Testing of Volatile Organic Emissions from Various Sources Using Small-Scale Environmental Chambers."

2.3 MASTICS

A. Materials shall be compatible with insulation materials, jackets, and substrates; comply with MIL-PRF-19565C, Type II.

1. For indoor applications, use mastics that have a VOC content of 50 g/L or less when calculated according to 40 CFR 59, Subpart D (EPA Method 24).

B. Vapor-Barrier Mastic: Water based; suitable for indoor use on below-ambient services.
1. Water-Vapor Permeance: ASTM E 96/E 96M, Procedure B, 0.013 perm (0.009 metric perm) at 43-mil (1.09-mm) dry film thickness.
2. Service Temperature Range: Minus 20 to plus 180 deg F (Minus 29 to plus 82 deg C).
3. Solids Content: ASTM D 1644, 58 percent by volume and 70 percent by weight.
4. Color: White.

C. Vapor-Barrier Mastic: Solvent based; suitable for indoor use on below-ambient services.
1. Water-Vapor Permeance: ASTM F 1249, 0.05 perm (0.03 metric perm) at 35-mil (0.9-mm) dry film thickness.
2. Service Temperature Range: 0 to 180 deg F (Minus 18 to plus 82 deg C).
3. Solids Content: ASTM D 1644, 44 percent by volume and 62 percent by weight.
4. Color: White.

D. Breather Mastic: Water based; suitable for indoor and outdoor use on above-ambient services.
1. Water-Vapor Permeance: ASTM F 1249, 1.8 perms (1.2 metric perms) at 0.0625-inch (1.6-mm) dry film thickness.
2. Service Temperature Range: Minus 20 to plus 180 deg F (Minus 29 to plus 82 deg C).
3. Solids Content: 60 percent by volume and 66 percent by weight.
4. Color: White.

2.4 LAGGING ADHESIVES

A. Description: Comply with MIL-A-3316C, Class I, Grade A and shall be compatible with insulation materials, jackets, and substrates.

1. For indoor applications, use lagging adhesives that have a VOC content of 50 g/L or less when calculated according to 40 CFR 59, Subpart D (EPA Method 24).
2. Fire-resistant, water-based lagging adhesive and coating for use indoors to adhere fire-resistant lagging cloths over pipe insulation.
3. Service Temperature Range: 0 to plus 180 deg F (Minus 18 to plus 82 deg C).
4. Color: White.

2.5 SEALANTS

A. Joint Sealants:

1. Materials shall be compatible with insulation materials, jackets, and substrates.
2. Permanently flexible, elastomeric sealant.
3. Service Temperature Range: Minus 100 to plus 300 deg F (Minus 73 to plus 149 deg C).
4. Color: White or gray.
5. For indoor applications, sealants shall have a VOC content of 420 g/L or less when calculated according to 40 CFR 59, Subpart D (EPA Method 24).

6. Sealants shall comply with the testing and product requirements of the California Department of Health Services' "Standard Practice for the Testing of Volatile Organic Emissions from Various Sources Using Small-Scale Environmental Chambers."

B. FSK and Metal Jacket Flashing Sealants:
1. Materials shall be compatible with insulation materials, jackets, and substrates.
2. Fire- and water-resistant, flexible, elastomeric sealant.
3. Service Temperature Range: Minus 40 to plus 250 deg F (Minus 40 to plus 121 deg C).
4. Color: Aluminum.
5. For indoor applications, sealants shall have a VOC content of 420 g/L or less when calculated according to 40 CFR 59, Subpart D (EPA Method 24).
6. Sealants shall comply with the testing and product requirements of the California Department of Health Services' "Standard Practice for the Testing of Volatile Organic Emissions from Various Sources Using Small-Scale Environmental Chambers."

C. ASJ Flashing Sealants, and Vinyl, PVDC, and PVC Jacket Flashing Sealants:
1. Materials shall be compatible with insulation materials, jackets, and substrates.
2. Fire- and water-resistant, flexible, elastomeric sealant.
3. Service Temperature Range: Minus 40 to plus 250 deg F (Minus 40 to plus 121 deg C).
4. Color: White.
5. For indoor applications, sealants shall have a VOC content of 420 g/L or less when calculated according to 40 CFR 59, Subpart D (EPA Method 24).
6. Sealants shall comply with the testing and product requirements of the California Department of Health Services' "Standard Practice for the Testing of Volatile Organic Emissions from Various Sources Using Small-Scale Environmental Chambers."

2.6 FACTORY-APPLIED JACKETS

A. Insulation system schedules indicate factory-applied jackets on various applications. When factory-applied jackets are indicated, comply with the following:

1. ASJ: White, kraft-paper, fiberglass-reinforced scrim with aluminum-foil backing; complying with ASTM C 1136, Type I.
2. ASJ-SSL: ASJ with self-sealing, pressure-sensitive, acrylic-based adhesive covered by a removable protective strip; complying with ASTM C 1136, Type I.
3. FSK Jacket: Aluminum-foil, fiberglass-reinforced scrim with kraft-paper backing; complying with ASTM C 1136, Type II.
4. FSP Jacket: Aluminum-foil, fiberglass-reinforced scrim with polyethylene backing; complying with ASTM C 1136, Type II.
5. Vinyl Jacket: White vinyl with a permeance of 1.3 perms (0.86 metric perms) when tested according to ASTM E 96/E 96M, Procedure A, and complying with NFPA 90A and NFPA 90B.

2.7 FIELD-APPLIED JACKETS

A. Field-applied jackets shall comply with ASTM C 921, Type I, unless otherwise indicated.

B. FSK Jacket: Aluminum-foil-face, fiberglass-reinforced scrim with kraft-paper backing.

C. PVC Jacket: High-impact-resistant, UV-resistant PVC complying with ASTM D 1784, Class 16354-C; thickness as scheduled; roll stock ready for shop or field cutting and forming. Thickness is indicated in field-applied jacket schedules.
   1. Adhesive: As recommended by jacket material manufacturer.
   2. Color: Color-code jackets based on system.
   3. Factory-fabricated fitting covers to match jacket if available; otherwise, field fabricate.

      a. Shapes: 45- and 90-degree, short- and long-radius elbows, tees, valves, flanges, unions, reducers, end caps, soil-pipe hubs, traps, mechanical joints, and P-trap and supply covers for lavatories.

D. Metal Jacket:
   1. Aluminum Jacket: Comply with ASTM B 209 (ASTM B 209M), Alloy 3003, 3005, 3105, or 5005, Temper H-14.
      a. Moisture Barrier for Indoor Applications: 3-mil- (0.075-mm-) thick, heat-bonded polyethylene and kraft paper/2.5-mil- (0.063-mm-) thick polysurlyn.
      b. Factory-Fabricated Fitting Covers:

         1) Same material, finish, and thickness as jacket.
         2) Preformed 2-piece or gore, 45- and 90-degree, short- and long-radius elbows.
         3) Tee covers.
         4) Flange and union covers.
         5) End caps.
         6) Beveled collars.
         7) Valve covers.
         8) Field fabricate fitting covers only if factory-fabricated fitting covers are not available.

2.8 TAPES

A. ASJ Tape: White vapor-retarder tape matching factory-applied jacket with acrylic adhesive, complying with ASTM C 1136.
   1. Width: 3 inches (75 mm).
   2. Thickness: 11.5 mils (0.29 mm).
   3. Adhesion: 90 ounces force/inch (1.0 N/mm) in width.
   4. Elongation: 2 percent.
   5. Tensile Strength: 40 lbf/inch (7.2 N/mm) in width.
   6. ASJ Tape Disks and Squares: Precut disks or squares of ASJ tape.

B. FSK Tape: Foil-face, vapor-retarder tape matching factory-applied jacket with acrylic adhesive; complying with ASTM C 1136.
   1. Width: 3 inches (75 mm).
   2. Thickness: 6.5 mils (0.16 mm).
   3. Adhesion: 90 ounces force/inch (1.0 N/mm) in width.
   4. Elongation: 2 percent.
   5. Tensile Strength: 40 lbf/inch (7.2 N/mm) in width.
   6. FSK Tape Disks and Squares: Precut disks or squares of FSK tape.

C. PVC Tape: White vapor-retarder tape matching field-applied PVC jacket with acrylic adhesive; suitable for indoor and outdoor applications.
   1. Width: 2 inches (50 mm).
   2. Thickness: 6 mils (0.15 mm).

3. Adhesion: 64 ounces force/inch (0.7 N/mm) in width.
4. Elongation: 500 percent.
5. Tensile Strength: 18 lbf/inch (3.3 N/mm) in width.

D. Aluminum-Foil Tape: Vapor-retarder tape with acrylic adhesive.
1. Width: 2 inches (50 mm).
2. Thickness: 3.7 mils (0.093 mm).
3. Adhesion: 100 ounces force/inch (1.1 N/mm) in width.
4. Elongation: 5 percent.
5. Tensile Strength: 34 lbf/inch (6.2 N/mm) in width.

2.9 SECUREMENTS

A. Bands:

1. Stainless Steel: ASTM A 167 or ASTM A 240/A 240M, Type 304; 0.015 inch (0.38 mm) thick, 1/2 inch (13 mm) wide with [wing seal] [or] [closed seal].
2. Aluminum: ASTM B 209 (ASTM B 209M), Alloy 3003, 3005, 3105, or 5005; Temper H-14, 0.020 inch (0.51 mm) thick, 1/2 inch (13 mm) wide.

B. Staples: Outward-clinching insulation staples, nominal 3/4-inch- (19-mm-) wide, stainless steel or Monel.

C. Wire: 0.080-inch (2.0-mm) nickel-copper alloy soft-annealed, galvanized steel.

PART 3 - EXECUTION

3.1 EXAMINATION

A. Examine substrates and conditions for compliance with requirements for installation tolerances and other conditions affecting performance of insulation application.

1. Verify that systems to be insulated have been tested and are free of defects.
2. Verify that surfaces to be insulated are clean and dry.
3. Proceed with installation only after unsatisfactory conditions have been corrected.

3.2 PREPARATION

A. Surface Preparation: Clean and dry surfaces to receive insulation. Remove materials that will adversely affect insulation application.

B. Surface Preparation: Clean and prepare surfaces to be insulated. Before insulating, apply a corrosion coating to insulated surfaces as follows:
1. Carbon Steel: Coat carbon steel operating at a service temperature between 32 and 300 deg F (0 and 149 deg C) with an epoxy coating. Consult coating manufacturer for appropriate coating materials and application methods for operating temperature range.

C. Mix insulating cements with clean potable water; if insulating cements are to be in contact with stainless-steel surfaces, use demineralized water.

3.3 GENERAL INSTALLATION REQUIREMENTS

A. Install insulation materials, accessories, and finishes with smooth, straight, and even surfaces; free of voids throughout the length of piping including fittings, valves, and specialties.

B. Install insulation materials, forms, vapor barriers or retarders, jackets, and thicknesses required for each item of pipe system as specified in insulation system schedules.

C. Install accessories compatible with insulation materials and suitable for the service. Install accessories that do not corrode, soften, or otherwise attack insulation or jacket in either wet or dry state.

D. Install insulation with longitudinal seams at top and bottom of horizontal runs.

E. Install multiple layers of insulation with longitudinal and end seams staggered.

F. Do not weld brackets, clips, or other attachment devices to piping, fittings, and specialties.

G. Keep insulation materials dry during application and finishing.

H. Install insulation with tight longitudinal seams and end joints. Bond seams and joints with adhesive recommended by insulation material manufacturer.

I. Install insulation with least number of joints practical.

J. Where vapor barrier is indicated, seal joints, seams, and penetrations in insulation at hangers, supports, anchors, and other projections with vapor-barrier mastic.

1. Install insulation continuously through hangers and around anchor attachments.
2. For insulation application where vapor barriers are indicated, extend insulation on anchor legs from point of attachment to supported item to point of attachment to structure. Taper and seal ends at attachment to structure with vapor-barrier mastic.
3. Install insert materials and install insulation to tightly join the insert. Seal insulation to insulation inserts with adhesive or sealing compound recommended by insulation material manufacturer.
4. Cover inserts with jacket material matching adjacent pipe insulation. Install shields over jacket, arranged to protect jacket from tear or puncture by hanger, support, and shield.

K. Apply adhesives, mastics, and sealants at manufacturer's recommended coverage rate and wet and dry film thicknesses.

L. Install insulation with factory-applied jackets as follows:

1. Draw jacket tight and smooth.
2. Cover circumferential joints with 3-inch- (75-mm-) wide strips, of same material as insulation jacket. Secure strips with adhesive and outward clinching staples along both edges of strip, spaced 4 inches (100 mm) o.c.
3. Overlap jacket longitudinal seams at least 1-1/2 inches (38 mm). Install insulation with longitudinal seams at bottom of pipe. Clean and dry surface to receive self-sealing lap. Staple laps with outward clinching staples along edge at 2 inches (50 mm) o.c.

    a. For below-ambient services, apply vapor-barrier mastic over staples.

4. Cover joints and seams with tape, according to insulation material manufacturer's written instructions, to maintain vapor seal.
5. Where vapor barriers are indicated, apply vapor-barrier mastic on seams and joints and at ends adjacent to pipe flanges and fittings.

M. Cut insulation in a manner to avoid compressing insulation more than 75 percent of its nominal thickness.

N. Finish installation with systems at operating conditions. Repair joint separations and cracking due to thermal movement.

O. Repair damaged insulation facings by applying same facing material over damaged areas. Extend patches at least 4 inches (100 mm) beyond damaged areas. Adhere, staple, and seal patches similar to butt joints.

P. For above-ambient services, do not install insulation to the following:

1. Vibration-control devices.
2. Testing agency labels and stamps.
3. Nameplates and data plates.
4. Cleanouts.

3.4 PENETRATIONS

A. Insulation Installation at Interior Wall and Partition Penetrations (That Are Not Fire Rated): Install insulation continuously through walls and partitions.

B. Insulation Installation at Fire-Rated Wall and Partition Penetrations: Install insulation continuously through penetrations of fire-rated walls and partitions.

1. Comply with requirements in Section 078413 "Penetration Firestopping" for firestopping.

C. Insulation Installation at Floor Penetrations:

1. Pipe: Install insulation continuously through floor penetrations.
2. Seal penetrations through fire-rated assemblies. Comply with requirements in Section 078413 "Penetration Firestopping."

3.5 GENERAL PIPE INSULATION INSTALLATION

A. Requirements in this article generally apply to all insulation materials except where more specific requirements are specified in various pipe insulation material installation articles.

B. Insulation Installation on Fittings, Valves, Strainers, Flanges, and Unions:

1. Install insulation over fittings, valves, strainers, flanges, unions, and other specialties with continuous thermal and vapor-retarder integrity unless otherwise indicated.
2. Insulate pipe elbows using preformed fitting insulation or mitered fittings made from same material and density as adjacent pipe insulation. Each piece shall be butted tightly against adjoining piece and bonded with adhesive. Fill joints, seams, voids, and irregular

surfaces with insulating cement finished to a smooth, hard, and uniform contour that is uniform with adjoining pipe insulation.

3. Insulate tee fittings with preformed fitting insulation or sectional pipe insulation of same material and thickness as used for adjacent pipe. Cut sectional pipe insulation to fit. Butt each section closely to the next and hold in place with tie wire. Bond pieces with adhesive.
4. Insulate valves using preformed fitting insulation or sectional pipe insulation of same material, density, and thickness as used for adjacent pipe. Overlap adjoining pipe insulation by not less than two times the thickness of pipe insulation, or one pipe diameter, whichever is thicker. For valves, insulate up to and including the bonnets, valve stuffing-box studs, bolts, and nuts. Fill joints, seams, and irregular surfaces with insulating cement.
5. Insulate strainers using preformed fitting insulation or sectional pipe insulation of same material, density, and thickness as used for adjacent pipe. Overlap adjoining pipe insulation by not less than two times the thickness of pipe insulation, or one pipe diameter, whichever is thicker. Fill joints, seams, and irregular surfaces with insulating cement. Insulate strainers so strainer basket flange or plug can be easily removed and replaced without damaging the insulation and jacket. Provide a removable reusable insulation cover. For below-ambient services, provide a design that maintains vapor barrier.
6. Insulate flanges and unions using a section of oversized preformed pipe insulation. Overlap adjoining pipe insulation by not less than two times the thickness of pipe insulation, or one pipe diameter, whichever is thicker.
7. Cover segmented insulated surfaces with a layer of finishing cement and coat with a mastic. Install vapor-barrier mastic for below-ambient services and a breather mastic for above-ambient services. Reinforce the mastic with fabric-reinforcing mesh. Trowel the mastic to a smooth and well-shaped contour.
8. For services not specified to receive a field-applied jacket except for flexible elastomeric and polyolefin, install fitted PVC cover over elbows, tees, strainers, valves, flanges, and unions. Terminate ends with PVC end caps. Tape PVC covers to adjoining insulation facing using PVC tape.
9. Stencil or label the outside insulation jacket of each union with the word "union." Match size and color of pipe labels.

C. Insulate instrument connections for thermometers, pressure gages, pressure temperature taps, test connections, flow meters, sensors, switches, and transmitters on insulated pipes. Shape insulation at these connections by tapering it to and around the connection with insulating cement and finish with finishing cement, mastic, and flashing sealant.

D. Install removable insulation covers at locations indicated. Installation shall conform to the following:

1. Make removable flange and union insulation from sectional pipe insulation of same thickness as that on adjoining pipe. Install same insulation jacket as adjoining pipe insulation.
2. When flange and union covers are made from sectional pipe insulation, extend insulation from flanges or union long at least two times the insulation thickness over adjacent pipe insulation on each side of flange or union. Secure flange cover in place with stainless-steel or aluminum bands. Select band material compatible with insulation and jacket.
3. Construct removable valve insulation covers in same manner as for flanges, except divide the two-part section on the vertical center line of valve body.
4. When covers are made from block insulation, make two halves, each consisting of mitered blocks wired to stainless-steel fabric. Secure this wire frame, with its attached insulation, to flanges with tie wire. Extend insulation at least 2 inches (50 mm) over

adjacent pipe insulation on each side of valve. Fill space between flange or union cover and pipe insulation with insulating cement. Finish cover assembly with insulating cement applied in two coats. After first coat is dry, apply and trowel second coat to a smooth finish.

5. Unless a PVC jacket is indicated in field-applied jacket schedules, finish exposed surfaces with a metal jacket.

3.6 INSTALLATION OF CELLULAR-GLASS INSULATION

A. Insulation Installation on Straight Pipes and Tubes:

1. Secure each layer of insulation to pipe with wire or bands and tighten bands without deforming insulation materials.
2. Where vapor barriers are indicated, seal longitudinal seams, end joints, and protrusions with vapor-barrier mastic and joint sealant.
3. For insulation with factory-applied jackets on above-ambient services, secure laps with outward-clinched staples at 6 inches (150 mm) o.c.
4. For insulation with factory-applied jackets on below-ambient services, do not staple longitudinal tabs. Instead, secure tabs with additional adhesive as recommended by insulation material manufacturer and seal with vapor-barrier mastic and flashing sealant.

B. Insulation Installation on Pipe Flanges:

1. Install preformed pipe insulation to outer diameter of pipe flange.
2. Make width of insulation section same as overall width of flange and bolts, plus twice the thickness of pipe insulation.
3. Fill voids between inner circumference of flange insulation and outer circumference of adjacent straight pipe segments with cut sections of cellular-glass block insulation of same thickness as pipe insulation.
4. Install jacket material with manufacturer's recommended adhesive, overlap seams at least 1 inch (25 mm), and seal joints with flashing sealant.

C. Insulation Installation on Pipe Fittings and Elbows:

1. Install preformed sections of same material as straight segments of pipe insulation when available. Secure according to manufacturer's written instructions.
2. When preformed sections of insulation are not available, install mitered sections of cellular-glass insulation. Secure insulation materials with wire or bands.

D. Insulation Installation on Valves and Pipe Specialties:

1. Install preformed sections of cellular-glass insulation to valve body.
2. Arrange insulation to permit access to packing and to allow valve operation without disturbing insulation.
3. Install insulation to flanges as specified for flange insulation application.

3.7 INSTALLATION OF MINERAL-FIBER INSULATION

A. Insulation Installation on Straight Pipes and Tubes:

1. Secure each layer of preformed pipe insulation to pipe with wire or bands and tighten bands without deforming insulation materials.
2. Where vapor barriers are indicated, seal longitudinal seams, end joints, and protrusions with vapor-barrier mastic and joint sealant.
3. For insulation with factory-applied jackets on above-ambient surfaces, secure laps with outward-clinched staples at 6 inches (150 mm) o.c.
4. For insulation with factory-applied jackets on below-ambient surfaces, do not staple longitudinal tabs. Instead, secure tabs with additional adhesive as recommended by insulation material manufacturer and seal with vapor-barrier mastic and flashing sealant.

B. Insulation Installation on Pipe Flanges:

1. Install preformed pipe insulation to outer diameter of pipe flange.
2. Make width of insulation section same as overall width of flange and bolts, plus twice the thickness of pipe insulation.
3. Fill voids between inner circumference of flange insulation and outer circumference of adjacent straight pipe segments with mineral-fiber blanket insulation.
4. Install jacket material with manufacturer's recommended adhesive, overlap seams at least 1 inch (25 mm), and seal joints with flashing sealant.

C. Insulation Installation on Pipe Fittings and Elbows:

1. Install preformed sections of same material as straight segments of pipe insulation when available.
2. When preformed insulation elbows and fittings are not available, install mitered sections of pipe insulation, to a thickness equal to adjoining pipe insulation. Secure insulation materials with wire or bands.

D. Insulation Installation on Valves and Pipe Specialties:

1. Install preformed sections of same material as straight segments of pipe insulation when available.
2. When preformed sections are not available, install mitered sections of pipe insulation to valve body.
3. Arrange insulation to permit access to packing and to allow valve operation without disturbing insulation.
4. Install insulation to flanges as specified for flange insulation application.

3.8 FIELD-APPLIED JACKET INSTALLATION

A. Where glass-cloth jackets are indicated, install directly over bare insulation or insulation with factory-applied jackets.

1. Draw jacket smooth and tight to surface with 2-inch (50-mm) overlap at seams and joints.
2. Embed glass cloth between two 0.062-inch- (1.6-mm-) thick coats of lagging adhesive.
3. Completely encapsulate insulation with coating, leaving no exposed insulation.

B. Where FSK jackets are indicated, install as follows:

1. Draw jacket material smooth and tight.
2. Install lap or joint strips with same material as jacket.
3. Secure jacket to insulation with manufacturer's recommended adhesive.

4. Install jacket with 1-1/2-inch (38-mm) laps at longitudinal seams and 3-inch- (75-mm-) wide joint strips at end joints.
5. Seal openings, punctures, and breaks in vapor-retarder jackets and exposed insulation with vapor-barrier mastic.

C. Where PVC jackets are indicated, install with 1-inch (25-mm) overlap at longitudinal seams and end joints; for horizontal applications. Seal with manufacturer's recommended adhesive.

1. Apply two continuous beads of adhesive to seams and joints, one bead under lap and the finish bead along seam and joint edge.

D. Where metal jackets are indicated, install with 2-inch (50-mm) overlap at longitudinal seams and end joints. Overlap longitudinal seams arranged to shed water. Seal end joints with weatherproof sealant recommended by insulation manufacturer. Secure jacket with stainless-steel bands 12 inches (300 mm) o.c. and at end joints.

3.9 FIELD QUALITY CONTROL

A. Testing Agency: Engage a qualified testing agency to perform tests and inspections.

B. Perform tests and inspections.

C. Tests and Inspections:

1. Inspect pipe, fittings, strainers, and valves, randomly selected by Engineer, by removing field-applied jacket and insulation in layers in reverse order of their installation. Extent of inspection shall be limited to three locations of straight pipe, three locations of threaded fittings, three locations of welded fittings, two locations of threaded strainers, two locations of welded strainers, three locations of threaded valves, and three locations of flanged valves for each pipe service defined in the "Piping Insulation Schedule, General" Article.

D. All insulation applications will be considered defective Work if sample inspection reveals noncompliance with requirements.

3.10 PIPE INSULATION SCHEDULE, GENERAL

A. Acceptable preformed pipe and tubular insulation materials and thicknesses are identified for each piping system and pipe size range. If more than one material is listed for a piping system, selection from materials listed is Contractor's option.

B. Items Not Insulated: Unless otherwise indicated, do not install insulation on the following:

1. Fire-suppression piping.
2. Drainage piping located in crawl spaces.
3. Below-grade piping.
4. Chrome-plated pipes and fittings unless there is a potential for personnel injury.

3.11 INDOOR PIPING INSULATION SCHEDULE

A. Condensate and Equipment Drain Water below 60 Deg F (16 Deg C):
1. All Pipe Sizes: Insulation shall the following:
a. Flexible Elastomeric: 1 inch **(25 mm)** thick.

B. Refrigerant Suction and Hot-Gas Piping:

1. All Pipe Sizes: Insulation shall be the following:

a. Cellular Glass: 1 inch thick.
b. Flexible Elastomeric: 1 inch thick.
c. Mineral-Fiber Pipe Insulation, Type I: 1 inch thick.

C. Heating-Hot-Water Supply and Return, 200 Deg. F and below:

1. NPS 6 (DN150) and Smaller: Insulation shall be any of the following:

a. Cellular Glass: 1 inch for piping <4" thick, and 2 inches for piping >4" thick.
b. Mineral-Fiber, Preformed Pipe, Type I: 1 inch for piping <4" thick, and 1-1/2" for piping >4" thick.

4.2 OUTDOOR PIPING INSULATION SCHEDULE

A. Refrigerant Liquid, Suction, and Hot Gas Bypass Piping:

1. All Pipe Sizes: Insulation shall be the following:

b. Flexible Elastomeric: 1 inch (25 mm) thick with PVC jacket.

4.3 INDOOR, FIELD-APPLIED JACKET SCHEDULE

A. Install jacket over insulation material. For insulation with factory-applied jacket, install the field-applied jacket over the factory-applied jacket.

B. If more than one material is listed, selection from materials listed is Contractor's option.

C. Piping, Exposed:

1. Aluminum, Smooth: 0.016 inch thick.

END OF SECTION 230719

SECTION 230923 - DIRECT DIGITAL CONTROL SYSTEM FOR HVAC

PART 1 - GENERAL

1.1 SUMMARY

A. Scope: Provide labor, material, equipment, related services, and supervision required, including, but not limited to, manufacturing, fabrication, configuration and installation for complete building automation system (also identified as BMS, Direct Digital Control System For HVAC) including all necessary hardware and all operating and applications software as required for the complete performance of the Work, as shown on the Drawings, as specified herein.

B. The BMS system shall interface seamlessly with the existing CM3 Building Solutions automation system Server, which currently serves the Haddonfield School District

C. This Section includes a complete web-based, interoperable Building Management System (BMS). In addition to other capabilities described hereinafter, the BMS shall include full programmability of all connected nodes (controllers) via the web for an authorized user. The BMS shall also include override capability of all controller outputs via the web for an authorized user. An authorized user shall also be able to create/ edit graphic screens, trends and alarms on-site using the specified hardware and software.

D. The BMS Contractor shall coordinate with HVAC equipment & system manufacturers for factory installation of their controllers & devices to assure seamless system operation.

E. Related Sections: Related sections include, but shall not be limited to, the following:

1. Drawings and general provisions of the Contract, including General and Supplementary Conditions and Division 01 Specification Sections, apply to this Section.

2. Applicable general requirements for electrical Work specified within Divisions 23, 25 Specification Sections apply to this Section.

F. Network level components of the system – workstations, servers, etc. shall communicate using the BACnet protocol, as defined by ASHRAE Standard 135-2004, or Modbus protocol. No gateways shall be used for communication to controllers furnished under this section.

G. At a minimum, provide controls for the following:

1. Air Handling Units	5. Boilers	9. Exhaust Fans
2. Rooftop Units	6. Pumps	10. Fan Powered VAV Boxes
3. Dehumidification Units	7. Fan Coil Units	11. Electric Duct Coils
4. Unit Ventilators	8. Unit Heaters	12. Radiation Units

H. Except as otherwise noted, the control system shall consist of all necessary Ethernet Network Controllers, Standalone Digital Control Units, Room Controllers, workstations, software, sensors, transducers, relays, valves, dampers, damper operators, control panels, and other accessory equipment, along with a complete system of electrical interlocking wiring to fill the intent of the specification and provide for a complete and operable system. Except as otherwise specified, provide operators for equipment such as dampers if the equipment manufacturer does not provide these. Coordinate requirements with the various Contractors.

I. The BAS system supplier shall review and study all HVAC drawings and the entire specification to familiarize themselves with the equipment and system operation and to verify the quantities and types of dampers, operators, alarms, etc. to be provided.

J. All interlocking wiring, wiring and installation of control devices associated with the equipment listed below shall be provided under this Contract. When the BAS system is fully installed and operational, the BAS system supplier and representatives of the Owner will review and check out the system – see System Acceptance and Testing section of this document. At that time, the BAS system supplier shall demonstrate the operation of the system and prove that it complies with the intent of the drawings and specifications.

K. Provide services and manpower necessary for commissioning of the system in coordination with the HVAC Contractor, Balancing Contractor and Owner's representative.

L. All work performed under this section of the specifications will comply with all governing codes, laws and governing bodies. If the drawings and/or specifications are in conflict with governing codes, the Contractor, with guidance from the engineer, shall submit a proposal with appropriate modifications to the project to meet code restrictions. If this specification and associated drawings exceed governing code requirements, the specification will govern. The Contractor shall obtain and pay for all necessary construction permits and licenses.

M. Related Sections

1. This Section includes the Building Management System (BMS) control equipment for HVAC systems and components, including open protocol control components for terminal heating and cooling units. Depending on the scope of the project, the complete specification may have numerous sections that interface to this section, including several from Division 25, 26, & 28.

2. Additional related sections and sub-sections can apply.

a. 25 00 10 Intelligent Building Management System (iBMS)
b. 25 01 00 Operation and Maintenance of Integrated Automation
c. 25 08 00 Commissioning of Integrated Automation
d. 25 09 93 Sequence of Operations for HVAC Controls
e. 25 11 00 Integrated Automation Network Devices
f. 25 13 00 Integrated Automation Control and Monitoring Network
g. 26 09 13 Embedded Power and Energy Management Software
h. 26 09 23.01 Metering and Switchboard Instruments
i. 26 09 23.02 Lighting Control Devices – Photoelectric
j. 26 09 23.03 Lighting Control Devices - Incandescent Dimming
k. 26 09 23.04 Lighting Control Devices - Fluorescent Dimming
l. 26 09 24 Lighting Control Devices - Low Voltage
m. 28 13 00 Access Control and Security Management System
n. 28 23 13 Video Management and Surveillance System
o. Add additional sections as required.

1.2 REFERENCES

A. General, Code Compliance: The code listed below form a part of this Specification to the extent referenced. The codes are referred to in the text by the basic designation only. The edition/revision of the referenced code shall be the latest date as of the date of the Contract Documents, unless otherwise specified.

1. Provide BAS components and ancillary equipment, which are UL-916 listed and labeled.
2. All equipment or piping used in conditioned air streams, spaces or return air plenums shall comply with NFPA 90A Flame/Smoke/Fuel contribution rating of 25/50/0 and all applicable building codes or requirements.

3. All wiring shall conform to the National Electrical Code.
4. All smoke dampers shall be rated in accordance with UL 555S.
5. Comply with FCC rules, Part 15 regarding Class A radiation for computing devices and low power communication equipment operating in commercial environments.
6. Comply with FCC, Part 68 rules for telephone modems and data sets.

1.3 DEFINITIONS

A. Unless specifically defined within the Contract Documents, the words or acronyms contained within this specification shall be as defined within, or by the references listed within this specification, the Contract Documents, or, if not listed by either, by common industry practice.

1. Standard
   a. ASHRAE: American Society Heating, Refrigeration, Air Conditioning Engineers
   b. AHU: Air Handling Unit
   c. BACnet: Building Automation Controls Network
   d. BMS: Building Management System
   e. DDC: Direct Digital Control
   f. EIA: Electronic Industries Alliance
   g. GUI: Graphical User Interface
   h. HVAC: Heating, Ventilation, and Air Conditioning
   i. IEEE: Institute Electrical Electronic Engineers
   j. MER: Mechanical Equipment Room
   k. PID: Proportional, Integral, Derivative
   l. VAV: Variable Air Volume Box
2. Communications and protocols
   a. ARP: Address Resolution Protocol
   b. BACnet: Building Automation and Control Networks
   c. CORBA: Common Object Request Broker Architecture
   d. CSMA/CD: Carrier Sense Multiple Access/Collision Detect
   e. DDE: Dynamic Data Exchange
   f. FTP: File Transfer Protocol
   g. FTT: Free Topology Transceivers
   h. HTTP: Hyper Text Transfer Protocol
   i. IIOP: Internet Inter-ORB Protocol
   j. IP: Internet Protocol
   k. LAN: Local Area Network
   l. LON: Echelon Communication – Local Operating Network
   m. MS/TP: Master Slave Token Passing
   n. OBIX: Open Building Information Exchange
   o. ODBC: Open Database Connectivity
   p. ORB: Object Request Broker
   q. SNVT: Standard Network Variables Types
   r. SQL: Structured Query Language
   s. UDP: User Datagram Protocol
   t. XML: eXtensible Markup Language
3. Controllers
   a. ASD: Application Specific Device

b. AAC: Advanced Application Controller
c. ASC: Application Specific Controller
d. CAC: Custom Application Controller
e. DCU: Distributed Control Unit
f. HRC: Hotel Room Controller
g. LCM: Local Control Module
h. MC: MicroControllers
i. MPC: Multi-purpose Controller
j. NSC: Network Server Controller
k. PEM: Package Equipment Module
l. PPC: Programmable Process Controller
m. RC: Room controller
n. RPC: Room Purpose Controller
o. SDCU: Standalone Digital Control Units
p. SLC: Supervisory Logic Controller
q. UEC: Unitary Equipment Controller
r. VAVDDC: Variable Air Volume Direct Digital Controller

4. Tools and Software
   a. AFDD: Automated Fault Detection and Diagnostic
   b. APEO: Automated Predictive Energy Optimization
   c. DR: Demand Response
   d. CCDT: Configuration, Commissioning and Diagnostic Tool
   e. BPES: BACnet Portable Engineering Station
   f. LPES: LON Portable Engineering Station
   g. POT: Portable Operator's Terminal
   h. PEMS: Power and Energy Management Software
   i. MTBF: Mean Time Between Failure

1.4 SYSTEM DESCRIPTION

A. In accordance to the scope of work, the system shall interface with the existing CM3 BAS Server that allows for instant access to any system through a standard browser.

B. For this project, the system shall consist of the following components:

1. Ethernet-based Network Router and/or Network Server Controller(s): The BAS system supplier shall furnish needed quantity of Ethernet-based Network Server Controllers as described in Part 2 of the specification. These controllers will connect directly to the Operator Workstation over Ethernet at a minimum of 100mbps, and provide communication to the Standalone Digital Control Units and/or other Input/Output Modules. Network Server Controllers shall conform to BACnet device profile B-BC. Network controllers that utilize RS232 serial communications or ARCNET to communicate with the workstations will not be accepted. Network Controllers shall be tested and certified by the BACnet Testing Laboratory (BTL) as BACnet Building Controllers (B-BC).
2. Standalone Digital Control Units (SDCUs): Provide the necessary quantity and types of SDCUs to meet the requirements of the project for mechanical equipment control including air handlers, central plant control, and terminal unit control. Each SDCU will operate completely standalone, containing all of the I/O and programs to control its associated equipment. Each BACnet protocol SDCU shall conform to the BACnet device profile B-AAC. BACnet SDCUs shall be tested and certified by the BACnet Testing Laboratory (BTL) as BACnet Advanced Application Controllers (B-AAC).

C. The Local Area Network (LAN) shall be either a 10 or 100 Mpbs Ethernet network supporting BACnet, Modbus, XML and HTTPS for maximum flexibility for integration of building data with enterprise information systems and providing support for multiple Network Server Controllers (NSCs), user workstations and a local host computer system.

D. The Enterprise Ethernet (IEEE 802.3) LAN shall utilize Carrier Sense Multiple/Access/Collision Detect (CSMA/CD), Address Resolution Protocol (ARP) and User Datagram Protocol (UDP) operating at 10 or 100 Mbps.

E. The system shall enable an open architecture that utilizes EIA standard 709.1, the LonTalk™ protocol and/or ANSI / ASHRAE™ Standard 135-2004, BACnet functionality to assure interoperability between all system components. Native support for the LonTalk™ protocol and the ANSI / ASHRAE™ Standard 135-2004, BACnet protocol are required to assure that the project is fully supported by the HVAC open protocols to reduce future building maintenance, upgrade, and expansion costs.

F. The system shall enable an architecture that utilizes a MS/TP selectable 9.6-76.8 KBaud protocol, as a common communication protocol between controllers and integral ANSI / ASHRAE™ Standard 135-2004, BACnet functionality to assure interoperability between all system components. The AAC shall be capable of communicating as a MS/TP device or as a BACnet IP device communicating at 10/100 Mbps on a TCP/IP trunk. The ANSI / ASHRAE™ Standard 135-2004, BACnet protocol is required to assure that the project is fully supported by the leading HVAC open protocol to reduce future building maintenance, upgrade, and expansion costs.

G. The system shall provide support for Modbus TCP and RTU protocols natively, and not require the use of gateways.

H. Complete temperature control system to be DDC with electronic sensors and electronic/electric actuation of Mechanical Equipment Room (MER) valves and dampers and electronic actuation of terminal equipment valves and actuators as specified herein. The BMS is intended to seamlessly connect devices throughout the building regardless of subsystem type, i.e. variable frequency drives, low voltage lighting systems, electrical circuit breakers, power metering and card access should easily coexist on the same network channel.

1. The supplied system must incorporate the ability to access all data using HTML5 enabled browsers without requiring proprietary operator interface and configuration programs. The system shall not require JAVA to be enabled in the browser.
2. Data shall reside on a supplier-installed server for all database access.
3. A hierarchical topology is required to assure reasonable system response times and to manage the flow and sharing of data without unduly burdening the customer’s internal Intranet network.

I. All work described in this section shall be installed, wired, circuit tested and calibrated by factory certified technicians qualified for this work and in the regular employment of the approved manufacturer's local field office. The approved manufacturer's local field office shall have a minimum of 5 years of installation experience with Schneider Electric EcoStruxure and I/A Series Automation Systems and shall provide documentation in the bid and submittal package verifying longevity of the installing company's relationship with the manufacturer when requested. Supervision, hardware and software engineering, calibration and checkout of the system shall be by the employees of the approved manufacturer's local field office and shall not be subcontracted. The control contractor shall have an in place support facility within 25 miles of the site with factory certified technicians and engineers, spare parts inventory and all necessary test and diagnostic equipment for the installed system, and the control contractor shall have 24 hours/day, 7 days/week emergency service available.

J. Provide the Commissioning, configuration and diagnostic tool (CCDT), color display personnel computer, software, and interfaces to provide uploading/downloading of High Point Count Controllers (AAC), Unitary Equipment Controllers (UEC) and VAV controllers (VAVDDC), monitoring all BACnet objects, monitoring overrides of all controller physical input/output points, and editing of controller resident time schedules.

1.5 SUBMITTALS

A. General: Submittals shall be in accordance with the requirements of Section 01 33 00 Submittals and Section 23 00 10 Mechanical, in addition to those specified herein.

1. All shop drawings shall be prepared in Visio Professional or AutoCAD software. In addition to the drawings, the Contractor shall furnish a CD containing the identical information. Drawings shall be B size or larger.

2. Shop drawings shall include a riser diagram depicting locations of all controllers and workstations, with associated network wiring. Also included shall be individual schematics of each mechanical system showing all connected points with reference to their associated controller. Typicals will be allowed where appropriate.

3. Submittal data shall contain manufacturer's data on all hardware and software products required by the specification. Valve, damper and air flow station schedules shall indicate size, configuration, capacity and location of all equipment.

4. Software submittals shall contain narrative descriptions of sequences of operation, program listings, point lists, and a complete description of the graphics, reports, alarms and configuration to be furnished with the workstation software. Information shall be bound or in a three ring binder with an index and tabs. Diagrams shall be on 11” by 17” foldouts. If color has been used to differentiate information, the printed copies shall be in color.

5. Submit one (1) electronic copy of submittal data and shop drawings to the Engineer for review prior to ordering or fabrication of the equipment. The Contractor, prior to submitting, shall check all documents for accuracy.

6. The Engineer will make corrections, if required, and return to the Contractor. The Contractor will then resubmit with the corrected or additional data. This procedure shall be repeated until all corrections are made to the satisfaction of the Engineer and the submittals are fully approved.

7. The following is a list of post construction submittals that shall be updated to reflect any changes during construction and re-submitted as “As-Built”.
   a. System architecture drawing.
   b. Layout drawing for each control panel
   c. Wiring diagram for individual components
   d. System flow diagram for each controlled system
   e. Instrumentation list for each controlled system
   f. Sequence of control
   g. Binding map
   h. A matrix sheet detailing all system addresses and communication settings for the following:
      1) All IP network addresses & settings
      2) All BMS device addresses & communication settings
   i. Operation and Maintenance Manuals

8. Information common to the entire system shall be provided. This shall include but not be limited to the following.
   a. Product manuals for the key software tasks.
   b. Operating the system.
   c. Administrating the system.
   d. Engineering the operator workstation.
   e. Application programming.
   f. Engineering the network.
   g. Setting up the web server.
   h. Report creation.
   i. Graphics creation.

j. All other engineering tasks.

k. System Architecture Diagram.

l. List of recommended maintenance tasks associated with the system servers, operator workstations, data servers, web servers and web clients.

m. Define the task.

n. Recommend a frequency for the task.

o. Reference the product manual that includes instructions on executing the task.

p. Names, addresses, and telephone numbers of installing contractors and service representatives for equipment and control systems.

q. Licenses, guarantees, and warranty documents for equipment and systems.

r. Submit one copy for each building, plus two extra copies.

9. Information common to the systems in a single building shall be provided.

a. System architecture diagram for components within the building annotated with specific location information.

b. As-built drawing for each control panel.

c. As-built wiring design diagram for all components.

d. Installation design details for each I/O device.

e. As-built system flow diagram for each system.

f. Sequence of control for each system.

g. Binding map for the building.

h. Product data sheet for each component.

i. Installation data sheet for each component.

j. Submit two copies for each building and two extra copies.

10. Software shall be provided:

a. Submit a copy of all software installed on the servers and workstations.

b. Submit all licensing information for all software installed on the servers and workstations.

c. Submit a copy of all software used to execute the project even if the software was not installed on the servers and workstations.

d. Submit all licensing information for all of the software used to execute the project.

e. All software revisions shall be as installed at the time of the system acceptance.

f. Firmware Files

g. Submit a copy of all firmware files that were downloaded to or pre-installed on any devices installed as part of this project.

h. This does not apply to firmware that is permanently burned on a chip at the factory and can only be replaced by replacing the chip.

i. Submit a copy of all application files that were created during the execution of the project.

j. Submit a copy of all graphic page files created during the execution of the project.

1.6 QUALITY ASSURANCE

A. All bidders must be building automation contractors in the business of installing direct digital control building automation systems for a minimum of 10 years.

1. The Building Management System contractor shall have a full service facility within 25 miles of the project that is staffed with engineers trained and certified by the manufacturer in the configuration, programming and service of the automation system. The contractor’s technicians shall be fully capable of providing instructions and routine emergency maintenance service on all system components.

2. Any installing contractor, not listed as prequalified in the Approved Manufacturer's section, shall submit credentials as detailed in the Pre-bid Submittal section for the engineer’s review 2 weeks

prior to bid date. Failure to follow the attached formats shall disqualify potential alternate bidders. Credentials must attest that the contractor meets all requirements of the specification and the Engineers judgment regarding approval to bid as an acceptable installer after reviewing the data will be final.

B. All bidders must be authorized distributors or branch offices of the manufacturers specified.

C. The following bidders have been pre-qualified:

1. Schneider Electric by CM3 Building Solutions (contact Pete Gregory at 215-360-7960).

D. Any installing contractors or manufacturers interested in participating as acceptable bidders for this project that are not pre-qualified shall furnish a detailed technical pre-bid submittal to the consulting engineer. All information must be submitted 2 weeks prior to the published bid date to allow the engineer adequate time to review the bidder's credentials.

E. The Pre-Bid submittal shall contain the following information as a minimum:

1. A profile of the manufacturer and the local installation and service/organization.
2. Description of how the system meets and achieves all the specified criteria in terms of configuration, operation, and control.
3. System Architecture with single line riser diagram showing all major components (digital controllers, routers, hubs, etc.) that will be required for this project.
4. Procedure for commissioning and time required to startup and commission each of the systems for this project.
5. Contractors approach for the project planning and management.
6. Product Data Sheets for all components, DDC panels, and all accessories listed per the appropriate specification sections herein.
7. Examples of actual graphic screens for other similar projects.
8. Number and types of DDC panels required for this installation.
9. Number and types of spare points provided with the proposed system.
10. Recommended spare parts list for components with list price schedule.
11. List of 2 similar systems in size, point capacity, total installed value, installed and commissioned by the local office with a list of the installers/manufacturers design team members for each project and the owners contact information.
12. Samples of service offerings and a list of current similar service contracts with contact information.
13. Resumes for the management team and all employees who will be involved with the project design, commissioning, project management, and after installation service. Resumes should include copies of manufacturer's certifications for the proposed product line.
14. Copy of this Control Specification in its entirety with a check mark beside each paragraph to signify that the manufacturer's equipment and software shall fully conform to the specified requirement. If the requirement cannot be met, indicate the reasons/limitations and the alternative proposed.
15. An interview may be conducted and the bidder will be requested to make a formal presentation concerning the proposed system and possibly provide an installed project tour prior to a final decision.

F. Each point in the system shall be tested for both hardware and software functionality. In addition, each mechanical and electrical system under control of the BAS will be tested against the appropriate sequence of operation specified herein. Successful completion of the system test shall constitute the beginning of the warranty period. A written report will be submitted to the owner indicating that the installed system functions in accordance with the plans and specifications.

G. The BAS system supplier shall commission and set in operating condition all major equipment and systems, such as the chilled water, hot water and all air handling systems, in the presence of the

equipment manufacturer's representatives, as applicable, and the Owner and Architect's representatives. If the vendor is providing an AFDD/CC system, use of the analytics shall be used to help commission the system.

H. The BAS system supplier shall provide a technician for 2 days manpower and engineering services required to assist the HVAC Contractor and Balancing Contractor in testing, adjusting, and balancing all systems in the building. The BAS system supplier shall coordinate all requirements to provide a complete air balance with the Balancing Contractor and shall include all labor and materials in his contract.

I. Startup Testing shall be performed for each task on the startup test checklist, which shall be initialed by the technician and dated upon test was completion along with any recorded data such as voltages, offsets or tuning parameters. Any deviations from the submitted installation plan shall also be recorded.

J. Required elements of the startup testing include:
   1. Measurement of voltage sources, primary and secondary
   2. Verification of proper controller power wiring.
   3. Verification of component inventory when compared to the submittals.
   4. Verification of labeling on components and wiring.
   5. Verification of connection integrity and quality (loose strands and tight connections).
   6. Verification of bus topology, grounding of shields and installation of termination devices.
   7. Verification of point checkout.
   8. Each I/O device is landed per the submittals and functions per the sequence of control.
   9. Analog sensors are properly scaled and a value is reported
   10. Binary sensors have the correct normal position and the state is correctly reported.
   11. Analog outputs have the correct normal position and move full stroke when so commanded.
   12. Binary outputs have the correct normal state and respond appropriately to energize/de-energize commands.
   13. Documentation of analog sensor calibration (measured value, reported value and calculated offset).
   14. Documentation of Loop tuning (sample rate, gain and integral time constant).

K. A performance verification test shall also be completed for the operator interaction with the system. Test elements shall be written to require the verification of all operator interaction tasks including, but not limited to the following.
   1. Graphics navigation.
   2. Trend data collection and presentation.
   3. Alarm handling, acknowledgement and routing.
   4. Time schedule editing.
   5. Application parameter adjustment.
   6. Manual control.
   7. Report execution.
   8. Automatic backups.
   9. Web Client access.

L. A Startup Testing Report and a Performance Verification Testing Report shall be provided upon test completion.

1.7 COORDINATION

A. Coordinate location of thermostats, humidistats, and other exposed control sensors with plans and room details before installation.

B. Coordinate equipment from other divisions including "Intrusion Detection," "Lighting Controls," "Motor Control Centers," "Panel boards," and "Fire Alarm" to achieve compatibility with equipment that interfaces with those systems.

C. Coordinate supply of conditioned electrical circuits for control units and operator workstation.

D. Coordinate location of concrete bases. Cast anchor-bolt inserts into bases. Concrete, reinforcement, and formwork requirements are specified in Division 3 Section "Cast-in-Place Concrete".

E. Coordinate with the Owner's IT department on locations for NSC's, Ethernet communication cabling and TCP/IP addresses.

1.8 OWNERSHIP

A. The Owner shall retain licenses to software for this project.

B. The Owner shall sign a copy of the manufacturer's standard software and firmware licensing agreement as a condition off this contractor. Such license shall grant use of all programs and application software to the Owner as defined by the manufacturer's license agreement, but shall protect the manufacturer's rights to disclosure of Trade Secrets contained within such software.

C. The licensing agreement shall not preclude the use of the software by individuals under contract to the owner for commissioning, servicing or altering the system in the future. Use of the software by individuals under contract to the owner shall be restricted to use on the owner's computers and only for the purpose of commissioning, servicing, or altering the installed system.

D. All project developed software, files and documentation shall become the property of the Owner. These include but are not limited to:
   1. Server and workstation software
   2. Application programming tools
   3. Configuration tools
   4. Network diagnostic tools
   5. Addressing tools
   6. Application files
   7. Configuration files
   8. Graphic files
   9. Report files
   10. Graphic symbol libraries
   11. All documentation

1.9 WORK BY OTHERS

A. The BAS system supplier shall cooperate with other contractors performing work on this project necessary to achieve a complete and neat installation. To that end, each contractor shall consult the drawings and specifications for all trades to determine the nature and extent of others' work.

B. The BAS system supplier shall furnish all Control Dampers, Control Valves, Flow Meters, Sensor Wells for installation by the Mechanical Contractor and/or others.

C. The BAS system supplier shall provide field supervision to the designated contractor for the installation of the following:
   1. Automatic control dampers
   2. Blank-off plates for dampers that are smaller than duct size.
   3. Sheet metal baffles plates to eliminate stratification.

4. The Electrical Contractor shall provide:
    a. All 120VAC power wiring to motors, heat trace, junction boxes for power to BAS panels.
    b. Furnish smoke detectors and wire to the building fire alarm system. HVAC Contractor to mount devices. BAS system supplier to hardwire to fan shut down.
    c. Auxiliary contact (pulse initiator) on the electric meter for central monitoring of kWh and KW. Electrical Contractor shall provide the pulse rate for remote readout to the BAS. BAS system supplier to coordinate this with the electrical contractor.

D. Prior to delivery to the Project site, ensure that suitable storage space is available to store materials in a well-ventilated area protected from weather, moisture, soiling, extreme temperatures, humidity, and corrosive atmospheres. Materials shall be protected during delivery and storage and shall not exceed the manufacturer stated storage requirements. As a minimum, store indoors in clean, dry space with uniform temperature to prevent condensation. In addition, protect electronics from all forms of electrical and magnetic energy that could reasonably cause damage.

E. Deliver materials to the Project site in supplier's or manufacturer's original wrappings and containers, labeled with supplier's or manufacturer's name, material or product brand name, and equipment tag number or service name as identified within the Contract Documents.

F. Inspect and report any concealed damage or violation of delivery storage, and handling requirements to the Engineer.

1.10 WARRANTY

A. All components, system software, and parts furnished and installed by the BMS system supplier shall be guaranteed against defects in materials and workmanship for 1 year of substantial completion. Labor to repair, reprogram, or replace these components shall be furnished by the BMS system supplier at no charge during normal working hours during the warranty period. Materials furnished but not installed by the BMS system supplier shall be covered to the extent of the product only. Installation labor shall be the responsibility of the trade contractor performing the installation. All corrective software modifications made during warranty periods shall be updated on all user documentation and on user and manufacturer archived software disks. The Contractor shall respond to the owner's request for warranty service within 24 standard working hours.

PART 2 - PRODUCTS

2.1 MANUFACTURERS

A. Basis of Design Product: Subject to compliance with requirements, provide products by one of the following pre-qualified manufacturers:
    1. Electric Components
        a. Schneider-Electric Field Devices
    2. Electronic Components
        a. Schneider-Electric Field Devices
    3. Direct Digital Control Systems Field Controller Devices:
        a. Schneider Electric EcoStruxure Building MP/RP BACnet series installed by CM3 Building Solutions (contact Pete Gregory at 215-360-7960).
        b. Or approved equal.

2.2 OPEN, INTEROPERABLE SYSTEM ARCHITECTURE

A. A. General

1. The Building Automation System (BAS) shall consist of Network Server/Controllers (NSCs), a family of Standalone Digital Control Units (SDCUs), Administration and Programming Workstations (APWs), and Web-based Operator Workstations (WOWs). The BAS shall provide control, alarm detection, scheduling, reporting and information management for the entire facility, and Wide Area Network (WAN) if applicable.
2. An Enterprise Level BAS shall consist of an Enterprise Server, which enables multiple NSCs (including all graphics, alarms, schedules, trends, programming, and configuration) to be accessible from a single Workstation simultaneously for operations and engineering tasks.
3. The Enterprise Level BAS shall support built-in reporting functionality without dependency on other software.
4. The Enterprise Level BAS shall support standard accessing of data for third party reporting or analytics software.
5. The Enterprise Level BAS shall be able to host up to 250 servers, or NSCs, beneath it.
6. For Enterprise reporting capability and robust reporting capability outside of the trend chart and listing ability of the Workstation, a Reports Server shall be installed on a Microsoft Windows SQL based computer. The Reports Server can be installed on the same computer as the Enterprise Server.
7. The system shall be designed with a top-level 10/100bT Ethernet network, using the BACnet/IP, LonWorks IP, and/or Modbus TCP protocol.

B. Modbus RTU/ASCII (and J-bus), Modbus TCP, BACnet MS/TP, BACnet IP, LonTalk FTT-10A, and WebServices shall be native to the NSCs. There shall not be a need to provide multiple NSCs to support all the network protocols, nor should there be a need to supply additional software to allow all three protocols to be natively supported.

C. A sub-network of SDCUs using the BACnet IP, BACnet MS/TP and/or Modbus RTU protocol shall connect the local, stand-alone controllers with Ethernet-level Network Server Controllers/IP Routers.

D. The TCP/IP layer connects all of the buildings on a single Wide Area Network (WAN) isolated behind the campus firewall. Fixed IP addresses for connections to the campus WAN shall be used for each device that connects to the WAN.

E. The fieldbus layer shall support all of the following types of SDCUs:
1. BACnet IP SDCU requirements: The system shall consist of one or more BACnet/IP field buses managed by the Network Server Controller. The field bus layer shall consist of up to 50 IP SDCUs in daisy chain topology, or 39 if using RSTP, per layer, with a max of 5 sub networks in daisy chain for a total of 250 SDCUs or 6 sub networks in RSTP for a total of 234 SDCUs.
2. BACnet MS/TP SDCU requirements: The system shall consist of one or more BACnet MS/TP field buses managed by the Network Server Controller. Minimum speed shall be 76.8kbps. The field bus layer consists of an RS485, token passing bus that supports up to 127 Standalone Digital Control Units (SDCUs) for operation of HVAC and lighting equipment. These devices shall conform to BACnet standard 135-2004. The NSCs shall be capable of at least two BACnet MS/TP field buses for a total capability of 254 SDCUs per NSC.
3. Modbus SDCU requirements: The system shall consist of one or more Modbus RTU (RS-485 or RS-232) field buses managed by the Network Server Controller. The field bus layer shall consist of up to 31 SDCUs for operation of HVAC, power metering, and lighting equipment. If utilizing Modbus TCP, the field bus layer shall consist of up to 100 SDCUs for operation of HVAC, power metering, and lighting equipment. The NSCs shall be capable of at least two Modbus RTU field buses for a total capability of 62 SDCUs per NSC.

F. The BAS shall be capable of being segmented, through software, into multiple local area networks (LANs) distributed over a wide area network (WAN). Workstations can manage a single LAN (or building), and/or the entire system with all portions of that LAN maintaining its own, current database.

G. All NSCs, Workstation(s) and Servers shall be capable of residing directly on the owner's Ethernet TCP/IP LAN/WAN with no required gateways. Furthermore, the NSC's, Workstation(s), and Server(s) shall be capable of using standard, commercially available, off-the-shelf Ethernet infrastructure components such as routers, switches and hubs. With this design the owner may utilize the investment of an existing or new enterprise network or structured cabling system. This also allows the option of the maintenance of the LAN/WAN to be performed by the owner's Information Systems Department as all devices utilize standard TCP/IP components.

H. System Expansion

1. The BAS system shall be scalable and expandable at all levels of the system using the same software interface, and the same TCP/IP level and fieldbus level controllers. Systems that require replacement of either the workstation software or field controllers in order to expand the system shall not be acceptable.
2. Web-based operation shall be supported directly by the NSCs and require no additional software.
3. The system shall be capable of using graphical and/or line application programming language for the Network Server Controllers.
4. The system shall be able to operate normally and without restriction at multiple software version levels with the only requirement that each element of the hierarchy be at least as new a version as the newest version in the level below it. In other words, Enterprise Servers will be able to manage NSCs of different version provided that the Enterprise Server was the same or more recent version than the most recent NSC version.

I. All Network Server Controllers must natively support the BACnet IP, BACnet MS/TP, LonWorks FTT-10, Modbus TCP, Modbus RTU (RS-485 and RS-232), and Modbus ASCII protocols.

2.3 OPERATOR WORKSTATION REQUIREMENTS

A. A. General

1. The programming and configuration workstation software shall allow any user with adequate permission to create and/or modify any or all parts of the NSC and/or Enterprise Server database.
2. At the NSC level, there shall be no cap on concurrent web-based workstations (webstations) other than what the CPU capacity can support.
3. All configuration workstations shall be personal computers operating under the Microsoft Windows operating system. The application software shall be capable of communication to all Network Server Controllers and shall feature high-resolution color graphics, alarming, trend charting. It shall be user configurable for all data collection and data presentation functions.

B. General Administration and Programming Workstation Software

1. System architecture shall be truly client server in that the Workstation shall operate as the client while the NSCs shall operate as the servers. The client is responsible for the data presentation and validation of inputs while the server is responsible for data gathering and delivery.
2. The workstation functions shall include monitoring and programming of all DDC controllers. Monitoring consists of alarming, reporting, graphic displays, long term data storage, automatic data collection, and operator-initiated control actions such as schedule and setpoint adjustments.
3. Programming of SDCUs shall be capable of being done either off-line or on-line from any operator workstation. All information will be available in graphic or text displays stored at the NSC. Graphic displays will feature animation effects to enhance the presentation of the data, to alert operators of problems, and to facilitate location of information throughout the DDC system. All operator functions shall be selectable through a mouse.

2.4 NETWORK SERVER CONTROLLERS (NSC)

A. Network Server Controllers shall combine both network routing functions, control functions, and server functions into a single unit.

B. The BACnet NSC shall be classified as a “native” BACnet device, supporting the BACnet Network Server Controller (B-BC) profile. Controllers that support a lesser profile such as B-SA are not acceptable. NSCs shall be tested and certified by the BACnet Testing Laboratory (BTL) as BACnet Network Server Controllers (B-BC).

C. The Network Server Controller shall provide the interface between the LAN or WAN and the field control devices, and provide global supervisory control functions over the control devices connected to the NRS.

D. The NSCs shall be capable of whitelisting IPs to restrict access to a pre-defined list of hosts or devices.

E. Whitelisting of file extensions for documents shall be capable.

F. Encrypted and authenticated communication shall be configurable for non-open protocol communications using TLS 1.2.

G. The NSCs shall support Simple Network Management Protocol version 3 (SNMPv3) for monitoring of the NSCs using a Network Management Tool.

H. The NSCs shall support remote system logging for used by System Information and Event Monitoring (SIEM) software.

I. They shall also be responsible for monitoring and controlling their own HVAC equipment such as an AHU or boiler.

J. They shall also contain graphics, trends, trend charts, alarm views, and other similar presentation objects that can be served to workstations or web-based interfaces. A sufficient number of NSCs shall be supplied to fully meet the requirements of this specification and the attached point list.

K. It shall be capable of executing application control programs to provide:
   1. Calendar functions
   2. Scheduling
   3. Trending
   4. Alarm monitoring and routing
   5. Time synchronization by means of an Internet site including automatic synchronization
   6. Native integration of LonWorks controller data and Modbus controller data or BACnet controller data and Modbus controller data
   7. Network Management functions for all LonWorks based devices

L. Hardware Specifications
   1. Memory:
      a. The operating system of the controller, application programs, and all other portions of the configuration database, shall be stored in non-volatile, FLASH memory. Servers/Controllers shall contain enough memory for the current application, plus required history logging, plus a minimum of 20% additional free memory.
   2. Each NRC shall provide the following on-board hardware for communication:
      a. Two 10/100b Ethernet for communication to Workstations, other NRCs, IP field bus controllers, other SDCUs, and onto the internet.
         1) The two Ethernet ports shall support active switch and BACnet/IP communication protocols.
         2) Support IPv4 addressing
         3) Ethernet port 1 shall support static or DHCP client configuration for communication to Workstation or other NSCs
         4) Ethernet port 2 shall support switch mode or DHCP server to set addressing of DHCP client devices
         5) It shall be possible to disable Ethernet port 2

6) In DHCP server mode, the Ethernet port 2 shall support 50 BACnet/IP field controllers in daisy chain configuration directly from the port
7) Each NSC shall be able to support a total of 250 IP SDCUs in daisy chain configuration (5 sub networks via switch)
8) If using RSTP (Rapid Spanning Tree Protocol) with a managed switch (with IEEE 802.1W or IEEE 802.1Q-2014 support), Ethernet port 2 shall support up to 39 devices
9) Each NSC shall be able to support a total of 234 IP SDCUs in RSTP configuration (6 sub networks via managed switch)
10) Where a switch is needed, use a Cisco 9000 Catalyst or IE switch, EtherWAN EX63402-01B, or other equal and approved equivalent.

b. Two RS-485 ports for communication to BACnet MSTP bus or serial Modbus (software configurable)

c. One TP/FT port for communication to LonWorks devices.

d. One device USB port

e. One host USB port

3. The NSC shall conform to a small footprint no larger than 100W x 125H x 75D mm (3.94W x 4.92H x 2.95D in).

M. Modular Expandability:

1. The system shall employ a modular I/O design to allow expansion. Input and output capacity is to be provided through plug-in modules of various types. It shall be possible to combine I/O modules as desired to meet the I/O requirements for individual control applications.

2. One shall be able to “hot-change” (hot-swap) the I/O modules preserving the system on-line without any intervention on the software; addressing and configuration shall be automatic.

3. If for any reason the backplane of the modular I/O system were to fail, I/O module addresses will be protected.

N. Hardware Override Switches:

1. All digital outputs shall, optionally, include three position manual override switches to allow selection of the ON, OFF, or AUTO output state. These switches shall be built into the unit and shall provide feedback to the controller so that the position of the override switch can be obtained through software. In addition, each analog output shall be equipped with an override potentiometer to allow manual adjustment of the analog output signal over its full range, when the 3 position manual override switch is placed in the ON position.

O. Universal Input Temperatures

1. All universal inputs directly connected to the NSC via modular expansion shall be capable of using the following thermistors for use in the system without any external converters needed.

a. 10 kohm Type I (Continuum)

b. 10 kohm Type II (I/NET)

c. 10 kohm Type III (Satchwell)

d. 10 kohm Type IV (FD)

e. Linearized 10 kohm Type V (FD w/11k shunt)

f. Linearized 10 kohm (Satchwell)

g. 1.8 kohm (Xenta)

h. 1 kohm (Balco)

i. 20 kohm (Honeywell)

j. 2.2 kohm (Johnson)

2. In addition to the above, the system shall be capable of using the below RTD sensors, however it is not required that all universal inputs be compatible with them.

a. PT100 (Siemens)

b. PT1000 (Sauter)

c. Ni1000 (Danfoss)

P. Local Status Indicator Lamps:

1. The NSC shall provide as a minimum LED indication of CPU status, Ethernet LAN status, and field bus status. For each input or output, provide LED indication of the value of the point (On/Off). The LED indication shall support software configuration to set whether the illumination of the LED corresponds to On or Off or whether the color when illuminated is Red or Green.

Q. Real Time Clock (RTC):

1. Each NSC shall include a real time clock, accurate to 10 seconds per day. The RTC shall provide the following: time of day, day, month, year, and day of week. Each NSC will allow for its own UTC offset, depending upon the time zone. When the time zone is set, the NSC will also store the appropriate times for daylight savings time.
2. The RTC date and time shall also be accurate, up to 10 days, when the NSC is powerless.
3. No batteries may be used to for the backup of the RTC.

R. Power Supply:

1. The 24 VDC power supply for the NSCs shall provide 30 watts of available power for the NSC and associated IO modules. The system shall support the use of more than one power supply if heavily power consuming modules are required.
2. The power supply, NSC, and I/O modules shall connect power wise and communication wise via the separate terminal base allowing for ease of replacement and no separate or loose wiring.

S. Automatic Restart After Power Failure:

1. Upon restoration of power after an outage, the NSC shall automatically and without human intervention update all monitored functions, resume operation based on current, synchronize time and status, and implement special start-up strategies as required.

T. Data Retention:

1. During a power failure, the NSC shall retain all programs, configuration data, historical data, and all other data that is configured to be retained. There shall be no time restriction for this retention and it must not use batteries to achieve it.

U. Software Specifications

1. The operating system of the controller, application programs, and all other portions of the configuration database such as graphics, trends, alarms, views, etc., shall be stored in non-volatile, FLASH memory. There will be no restrictions placed on the type of application programs in the system. Each NSC shall be capable of parallel processing, executing all control programs simultaneously. Any program may affect the operation of any other program. Each program shall have the full access of all I/O facilities of the processor. This execution of control function shall not be interrupted due to normal user communications including interrogation, program entry, printout of the program for storage, etc.
2. Each NSC shall have an available capacity of 4 GB of memory. This shall represent 2 GB for application and historical data and 2 GB dedicated for backup storage.

V. User Programming Language:

1. The application software shall be user programmable. This includes all strategies, sequences of operation, control algorithms, parameters, and setpoints. The source program shall be either a script-based structured text or graphical function block based and fully programmable by the user. The language shall be structured to allow for the configuration of control programs, schedules, alarms, reports, telecommunications, local displays, mathematical calculations, and histories. Users shall be able to place comments anywhere in the body of either script or function block programs.
2. Network Server Controllers that use a “canned” program method will not be accepted.

W. Control Software:

1. The NSC shall have the ability to perform the following pre-tested control algorithms:
   a. Proportional, Integral plus Derivative Control (PID)
   b. Two Position Control
   c. Digital Filter
   d. Ratio Calculator
   e. Equipment Cycling Protection

X. Mathematical Functions:

1. Each controller shall be capable of performing basic mathematical functions (+, -, *, /), squares, square roots, exponential, logarithms, Boolean logic statements, or combinations of both. The controllers shall be capable of performing complex logical statements including operators such as >, <, =, and, or, exclusive or, etc. These must be able to be used in the same equations with the mathematical operators and nested up to five parentheses deep.

Y. NSCs shall have the ability to perform any or all of the following energy management routines:

1. Time of Day Scheduling
2. Calendar Based Scheduling
3. Holiday Scheduling
4. Temporary Schedule Overrides
5. Optimal Start
6. Optimal Stop
7. Night Setback Control
8. Enthalpy Switchover (Economizer)
9. Peak Demand Limiting
10. Temperature Compensated Duty Cycling
11. CFM Tracking
12. Heating/Cooling Interlock
13. Hot/Cold Deck Reset
14. Hot Water Reset
15. Chilled Water Reset
16. Condenser Water Reset
17. Chiller Sequencing

Z. History Logging:

1. Each NSC controller shall be capable of LOCALLY logging any input, output, calculated value or other system variable either over user defined time intervals ranging from 1 second to 1440 minutes or based upon a user configurable change of value. A minimum of 1000 logs, with a minimum of 100,000 records, shall be stored. Each log can record either the instantaneous, average, minimum or maximum value of the point. Logged data shall be downloadable to a higher level NSC long term archiving based upon user-defined time intervals, or manual command.
2. For extended trend logging a minimum of 1500 trends shall be capable, with a minimum number of 600,000 records within.
3. Management of a power meter replacement to ensure meter log data is accurate shall be possible in the NSC.
4. Every hardware input and output point, hosted within the NSC and attached I/O modules, shall be trended automatically without the requirement for manual creation, and each of these logs shall log values based upon a change of value and store at least 500 trend samples before replacing the oldest sample with new data.

5. The presentation of logged data shall be built into the server capabilities of the NSC. Presentation can be in time stamped list formats or in a chart format with fully configurable pen colors, weights, scales and time spans.
6. Tooltips shall be present, magnetic, and visible based on user's preference.
7. Comments shall be visible whenever viewing the trend log list.
8. System shall give indication of memory usage and be able to alert the user if too many logs are allocated.
9. The BMS software and Network Servers shall support recording of all historical data, independent of any limitation in its local memory, which will be readily available for reporting and analysis without additional configurations or actions.
10. All historical data shall be available for use by the operator to access in BMS or a third-party reporting systems.

AA. Alarm Management:

1. For each system point, alarms can be created based on high/low limits or in comparison to other point values. All alarms will be tested each scan of the NSC and can result in the display of one or more alarm messages or reports.
2. There is no limit to the number of alarms that can be created for any point
3. Alarms can be configured to be generated based upon a single system condition or multiple system conditions.
4. Alarms will be generated based on an evaluation of the alarm conditions and can be presented to the user in a fully configurable order, by priority, by time, by category, etc. These configurable alarm views will be presented to a user upon logging into the system regardless of whether the log in takes place at a WorkStation or a Webstation.
5. The alarm management system shall support the ability to create and select cause and action notes to be selected and associated with an alarm event. Checklists shall also be possible in order to present to an operator a suggested mode of troubleshooting. When acknowledging an alarm, it shall be possible to assign it to a user of the system such that the user is notified of the assignment and is made responsible for the alarm resolution.
6. Alarms must be capable of being routed to any BACnet workstation that conforms to the B-OWS device profile and uses the BACnet/IP protocol.

BB. Embedded Web Server

1. Each NSC must have the ability to serve out web pages containing the same information that is available from the WorkStation. The development of the screens to accomplish shall not require any additional engineering labor over that required to show them at the WorkStation itself.
2. The NSC shall be configurable to logging all Embedded Web Server access attempts
3. The NSC shall have the option to redirect HTTP based Embedded Web Server connections to secure, HTTPS connections.
4. The NSC shall authenticate and authorize all users connecting to the Embedded Web Server
5. The NSC shall provide to ability to configure an automatic logoff for Embedded Web Server users that have not had any activity for an adjustable time period.

CC. The NSC controller shall comply with the following regulatory certifications

1. CE – EN 61000-6-3
2. CE – EN 61000-6-2
3. CE – EN 61010-1
4. CE – EN 61326-1
5. FCC CFR 47 Part 15 Class A
6. RCM

7. RoHS 2011/65/EU
8. China RoHS SJ/T 11364-2014
9. UL916 Energy Management equipment

DD. HMI

1. The NSC shall have an option for a tablet display
2. The tablet display shall be an industrial grade Human Machine Interface (HMI) that can be locked to the building management application to create a dedicated tool for local operation and maintenance.
3. The tablet display shall provide an easy-to-use interface through which users and engineers can locally access NSC's
4. The tablet display shall always start in a kiosk mode ensuring the end user can only use the device using the installed integration with the NSC.
5. The tablet display shall always require a password on start up
6. The tablet display shall require a password after a defined period of inactivity
7. The tablet display shall support being handheld or being installed on a control cabinet.
8. The tablet display user interface shall provide touchscreen navigation making it easy to operate and maintain the system.
9. The tablet display shall support robust physical panel mounting mechanisms provided with the product.
10. The tablet display shall have a screen size of 255mm or 10.1 inches
11. The tablet display shall support a screen resolution of 1280 by 800 pixels
12. The tablet display shall have a 16:10 aspect ratio
13. The tablet display shall be based on the Android platform
14. The tablet display shall have an IP54 rated frame that helps protect against dust and moisture.
15. The tablet display shall be powered by a 24 VDC power supply
16. The tablet display can be powered by a 24 VDC through the Y-shaped cable
17. The tablet display shall be able to communicate with the NSC over a wired (USB) connection running BACnet IP over USB.
18. The tablet display shall have an accessory Wi-Fi Module is an option instead of using USB for communication.
    a. Through the Wi-Fi module, you can establish wireless communication between the tablet display and the NCS connected to a wireless access point.
    b. The Wi-Fi module shall have an adhesive mount Wi-Fi antenna.
    c. The Wi-Fi module shall be compliant with IEEE 802.11 b/g/n
    d. The Wi-Fi module shall support enhanced wireless security using 64-bit and 128-bit WEP encryption
19. The tablet display shall connect to the NSC using only secure, HTTPS connections via the WebStation functionality of the NSC
20. The tablet display shall connect using a specific user and password combination defined as part of the NSC configuration

EE. Zoning (software defined zoning)

1. It shall be possible for BMS software and Network Servers (NSCs) to support synchronized control of lights, blinds and HVAC across multiple floorplan scenarios.
2. It shall be possible to create multiple synchronized control scenarios of lights/blinds/HVAC based to accommodate different floor plan scenarios.
3. It shall be possible to change synchronized control of lights/blinds/HVAC from one floorplan scenario to another manually or automatically.
4. It shall be possible to adapt synchronized controls of lights, blinds and HVAC to a different floorplan scenario using any device running a standard web browser.
5. It shall be possible for the administrator to manage user and group permissions to view / re-configure floor plan scenarios.

2.5 BACNET IP FIELDBUS CONTROLLERS

A. Controllers – BACnet/IP Protocol
1. All BACnet/IP Fieldbus controllers shall be BACnet Testing Laboratory listed (v12 or later) as specified BACnet Advanced Application Controller (B-AAC)
2. All BACnet/IP Fieldbus controllers shall use the following communication specifications and achieve performance as specified herein:
   a. All controllers shall be able to communicate peer-to-peer without the need for a NSC
   b. Any BACnet/IP Fieldbus controllers on the Ethernet Data Link/Physical layer shall be able to act as a Master to allow for the exchange and sharing of data variables and messages with any other controller connected on the same communication cabling. Slave controllers are not acceptable.

B. The BACnet/IP Fieldbus controllers shall be equipped with 2x 10/100bT Ethernet communication ports with active switch and will support BACnet/IP communication protocols with the following configurations:
1. Supporting IPv4 addressing
2. Supporting Static IP setting, DHCP client and Auto-IP address acquisition
3. It shall be possible to disable Ethernet port 2

C. Topologies
1. BACnet/IP Fieldbus controllers shall support daisy chain topology of up to 50 controllers. In case of any disruption to the communication, a system alarm shall notify the NSC/BMS of the point disruption has occurred.
2. BACnet/IP Fieldbus Controllers shall support RSTP loop whereby up to 39 controllers are supported.
   a. In case of any disruption there shall be no communication interruption
   b. In case of any disruption there shall be system alarms that will inform the operator of the disruption

D. Performance
1. Each BACnet/IP Fieldbus Controllers shall have a 32-bit microprocessor operating at 500 MHz and support a BACnet protocol stack in accordance with the ANSI/ASHRAE Standard 135-2008 and the BACnet Device Profile supported.
2. They shall be multi-tasking, real-time digital control processors consisting of communication controllers, controls processing, power supplies with built-in inputs and outputs.

E. Programmability
1. The BACnet/IP Fieldbus controllers shall support both script programming language and graphical that will be consistent with the NSC.
2. The control program will reside within the same enclosure as the input/output circuitry, that reads inputs and controls outputs

3. All control sequences programmed into the BACnet/IP Fieldbus Controllers shall be stored in non-volatile memory, which is not dependent upon the presence of a battery, to be retained.
4. BACnet/IP Fieldbus controllers shall communicate with the Network Server Controller (NSC) via a BACnet/IP connection at a baud rate of not less than 100 Mbps
5. BACnet/IP Fieldbus controllers shall support a dedicated communications port for connecting and supplying power to a matching room temperature and/or humidity sensor and/or CO2 and/or presence detector that does not utilize any of the I/O points of the controller.
6. BACnet/IP Fieldbus controllers (Excluding VAV) shall support an add-on display to supply and provide access in real-time for monitoring inputs and overriding of outputs
7. The override functionality must be supported by a dedicated processor to assure reliable operation (overriding of output)
8. Each BACnet/IP Fieldbus controller shall have sufficient memory, to support its own operating system and databases, including:
    a. Control processes
    b. Energy management applications
    c. Alarm management
    d. Historical/trend data
    e. Maintenance support applications
    f. Custom processes
    g. Manal override monitoring
9. Each BACnet/IP Fieldbus controller shall support local trend data up to 2x the built-in I/O and at a minimum be capable of holding 5 days @ 15 min intervals locally.
10. The BACnet/IP Fieldbus controller analog or universal input shall use a 16 bit A/D converter.
11. The BACnet/IP Fieldbus controller analog or universal output shall use a 10 bit D/A converter.
12. Built-in I/O: each BACnet/IP Fieldbus controllers shall support:
    a. At minimum 8 and up to 20 configurable IO channels to monitor and to control the following types of inputs and outputs without the addition of equipment inside or outside the DDC Controller cabinet.
        1) Universal Inputs – the following thermistors for use in the system without any external converters needed.
            a) 10 kohm Type I (Continuum)
            b) 10 kohm Type II (I/NET)
            c) 10 kohm Type III (Satchwell)
            d) 10 kohm Type IV (FD)
            e) Linearized 10 kohm Type V (FD w/11k shunt)
            f) Linearized 10 kohm (Satchwell)
            g) 1.8 kohm (Xenta)
            h) 1 kohm (Balco)
            i) 20 kohm (Honeywell)
            j) 2.2 kohm (Johnson)
            k) PT100 (Siemens)
            l) PT1000 (Sauter)
            m) Ni1000 (Danfoss)
        2) Analog inputs
            a) Current Input - 0-20 mA
            b) Voltage Input 0-10 Vdc
        3) Digital inputs from dry contact closure, pulse accumulators, voltage sensing.
        4) Digital outputs
        5) Analog outputs of 4-20 mA and/or 0-10 Vdc
13. Real Time Clock (RTC):
    a. Provide internal clocks for all BACnet Controllers (B-AAC) using BACnet time synchronization services.
        1) Automatically synchronize system clocks daily from an operator-designated controller.

2) The system shall automatically adjust for daylight saving time.

b. Each BACnet/IP Fieldbus controller shall include a real time clock, accurate to +/-1 minute per month.

c. The RTC shall provide the following: time of day, day, month, year, and day of week.

d. The RTC date and time shall also be accurate up to 7 days, from when the BACnet/IP Fieldbus controller has lost power with no reliance on.

14. The BACnet/IP Fieldbus controller for Variable Air Volume (VAV) applications

a. The BACnet/IP Fieldbus controller for VAV applications shall include a built-in 'flow thru' differential pressure transducer

b. The VAV differential pressure transducer shall have a measurement range of 0 to 1 in. W.C. and measurement accuracy of ±5% at 0.001 to 1 in. W.C. and a minimum resolution of 0.001 in. W.C., insuring primary air flow conditions shall be controlled and maintained to within ±5% of setpoint at the specified minimum and maximum air flow parameters

c. The BACnet/IP FieldBus controller for VAV applications shall support a dedicated commissioning tool for air flow balancing

d. The BACnet/IP Fieldbus controller for VAV applications shall require no programing for air balancing algorithm

e. All balancing parameters shall be synchronized in NSC

15. Each BACnet/IP Fieldbus controller shall have a minimum of 10% spare capacity for each point type represented on the controller for future point connection

16. Power Requirements. 24VDC (21 to 33 VDC) and 24 VAC +/-20% with local transformer power

17. Each BACnet/IP Fieldbus controller shall be accredited for smoke control and smoke management within a fully IP control solution

18. The BACnet/IP Fieldbus controller shall comply with the following regulatory certifications

a. CE - EMCD 2014/30/EU

b. CE LVD 2014/35/EU

c. FCC CFR 47 Part 15 Class B

d. RCM

e. RoHS 2011/65/EU

f. China RoHS SJ/T 11364-2014

g. UL2043 (Plenum space mounting)

h. UL916 Open-Energy Management equipment

i. UL916 Energy Management equipment

19. Intelligent Space Sensor Interface –

a. The BACnet/IP Fieldbus controllers shall support a dedicated RJ45 communication port to communicate and power up to 4 intelligent wall mount sensors without the use of on-board inputs or outputs

b. It shall be possible to disable the RJ45 communication port.

20. The BACnet/IP Fieldbus controller for Connected Room solutions

a. All BACnet/IP Fieldbus controllers shall be BACnet Testing Laboratory listed (v14 or later) as specified BACnet Advanced Application Controller (B-AAC)

b. All BACnet/IP Fieldbus controllers shall use the following communication specifications and achieve performance as specified herein:

1) All controllers shall be able to communicate peer-to-peer without the need for an NSC

2) Any BACnet/IP Fieldbus controllers on the Ethernet Data Link/Physical layer shall be able to act as a Master to allow for the exchange and sharing of data variables and messages with any other controller connected on the same communication cabling. Slave controllers are not acceptable.

c. The BACnet/IP Fieldbus controllers shall be equipped with 2x 10/100bT Ethernet communication ports with active switch and will support BACnet/IP communication protocols with the following configurations:

1) Supporting IPv4 addressing

2) Supporting Static IP setting, DHCP client and Auto-IP address acquisition

3) It shall be possible to disable Ethernet port 2

4) Each BACnet/IP controller shall be configurable to restrict communications to only whitelisted IP addresses.

d. Topologies

1) BACnet/IP Fieldbus controllers shall support daisy chain topology of up to 50 controllers. In case of any disruption to the communication, a system alarm shall notify the NSC/BMS of the point disruption has occurred.

2) BACnet/IP Fieldbus Controllers shall support RSTP loop whereby up to 39 controllers are supported.

a) In case of any disruption there shall be no communication interruption

b) In case of any disruption there shall be system alarms that will inform the operator of the disruption

e. Performance

1) Each BACnet/IP Fieldbus Controllers shall have a 32-bit microprocessor operating at 500 MHz and support a BACnet protocol stack in accordance with the ANSI/ASHRAE Standard 135-2012 and the BACnet Device Profile supported.

2) They shall be multi-tasking, real-time digital control processors consisting of communication controllers, controls processing, power supplies with built-in inputs and outputs.

3) Each BACnet/IP Fieldbus Controllers shall support upgrade of its firmware with no impact to its operation

f. Programmability

1) The BACnet/IP Fieldbus controllers shall support both script programming language and graphical that will be consistent with the NSC.

2) The control program will reside within the same enclosure as the input/output circuitry, that reads inputs and controls outputs

3) All control sequences programmed into the BACnet/IP Fieldbus Controllers shall be stored in non-volatile memory, which is not dependent upon the presence of a battery, to be retained.

4) The BACnet/IP Fieldbus controllers shall communicate with the Network Server Controller (NSC) via a BACnet/IP connection at a baud rate of not less than 100 Mbps

5) The BACnet/IP Fieldbus controllers shall support two RS485 communication ports for connecting and supplying power to a range of protocol types

a) BACnet/IP Fieldbus controllers shall support configurable selection of the supported protocol on the RS485 communications ports,

b) BACnet/IP Fieldbus controllers shall support a communications capability for connecting and supplying power to a matching room temperature and/or humidity sensor and/or CO2 and/or presence detector that does not utilize any of the I/O points of the controller.

c) BACnet/IP Fieldbus controllers shall support a communications capability for connecting and supplying power to a matching connected module for the

purpose of control of lights and blinds that do not utilize any of the I/O points of the controller

d) BACnet/IP Fieldbus controllers shall support a communications capability for connecting to open market Modbus devices

g. BACnet/IP Fieldbus controllers shall support on-board Bluetooth Low Energy radio to support:

1) Mobile application shall be available for controller commissioning

2) Mobile applications shall be available for building occupants

3) It shall be possible to disable the Bluetooth Low Energy Radio

4) The BACnet/IP Fieldbus controller shall support a connection for an external antenna.

h. BACnet/IP Fieldbus controllers shall support an optional plug-in Zigbee 3.0 radio for the purpose of connecting to wireless Zigbee sensors and devices.

1) It shall be possible to connect to up to 16 Zigbee sensors or devices

2) The controller shall support a range of different sensors and devices for easy commissioning

3) The controller shall be able to connect to a Green Power Zigbee temperature and humidity sensor with 10 years of battery life

4) The controller shall be able to connect to a Zigbee temperature, humidity and CO2 sensor with 10 years of battery life

i. Controllers that only support older versions of the Zigbee 3.0 are not approved due to the lack of security layer

j. It shall be possible to connect the Zigbee radio directly to the BACnet/IP RP Fieldbus controller.

k. It shall be possible to install the Zigbee radio in the ceiling using a purpose designed extension cable and ceiling housing when radio reception at the controller may be compromised.

l. Each BACnet/IP Fieldbus controller shall have sufficient memory, to support its own operating system and databases, including:

1) Control processes

2) Energy management applications

3) Alarm management

4) Historical/trend data

5) Maintenance support applications

6) Custom processes

m. In the case of communication disruption between the BACnet/IP Fieldbus controller and NSC/BMS, each BACnet/IP Fieldbus controller shall support storage of local trend data up to 2x the number of its built-in I/O at the collection rate of 5 min for 5 days.

n. The BACnet/IP Fieldbus controller analog or universal input shall use a 16-bit A/D converter.

o. The BACnet/IP Fieldbus controller analog or universal output shall use a 10-bit D/A converter.

p. Built-in I/O: each BACnet/IP Fieldbus controllers shall support:

1) Up to 8 configurable IO channels to monitor and to control the following types of inputs and outputs without the addition of equipment inside or outside the DDC Controller cabinet.

a) Universal Inputs – the following thermistors for use in the system without any external converters needed.

b) 10K Ohm Type I (Continuum)

c) 10K Ohm Type II (I/NET)

d) 10K Ohm Type III (Satchwell)
e) 10K Ohm Type IV (FD)
f) Linearized 10K Ohm Type V (FD w/11k shunt)
g) Linearized 10K Ohm (Satchwell)
h) 1.8K Ohm (Xenta)
i) 1K Ohm (Balco)
j) 20K Ohm (Honeywell)
k) 2.2K Ohm (Johnson)
l) PT100 (Siemens)
m) PT1000 (Sauter)
n) Ni1000 (Danfoss)
o) Voltage Input - 0-10 Vdc
p) Digital inputs from dry contact closure, pulse accumulators, voltage sensing.
q) Digital outputs
r) Analog outputs 0-10 Vdc

q. Internal Clock
1) Provide internal clocks for all BACnet Controllers (B-AAC) using BACnet time synchronization services.
a) Automatically synchronize system clocks daily from an operator-designated controller.
b) The system shall automatically adjust for daylight saving time.
2) Each BACnet/IP Fieldbus controller shall include a real time clock, accurate to +/-1 minute per month.
3) The RTC shall provide the following: time of day, day, month, year, and day of week.
4) The RTC date and time shall also be accurate up to 7 days, from when the BACnet/IP Fieldbus controller has lost power with no reliance on batteries

r. Each BACnet/IP Fieldbus controller shall have a minimum of 10% spare capacity for each point type represented on the controller for future point connection

s. Power Requirements. 24VDC (21 to 33 VDC) and 24 VAC +/-20% with local transformer power

t. Power Requirements. A line voltage version shall be available 230 VAC

u. In the case of power disruption, each BACnet/IP Fieldbus controller shall support power failure recovery within 10 seconds and resume operation from where the disruption had occurred

v. The BACnet/IP Fieldbus controller shall be able to be plenum mounted (UL2043 compliant)

w. The BACnet/IP Fieldbus controller shall meet the open class standard of UL916 permitting its installation without secondary enclosure where appropriate

x. The BACnet/IP Fieldbus controller shall comply with the following regulatory certifications
1) CE - EMCD 2014/30/EU
2) CE LVD 2014/35/EU
3) FCC CFR 47 Part 15 Class B
4) RCM
5) RoHS 2011/65/EU
6) China RoHS SJ/T 11364-2014
7) UL2043 (Plenum space mounting)
8) UL916 Open-Energy Management equipment

9) UL916 Energy Management equipment

y. Intelligent Space Sensor Interface - The BACnet/IP Fieldbus controllers shall support an RJ45 communication port to communicate and power up to 4 intelligent wall mount sensors without the use of on-board inputs or outputs

1) It shall be possible to disable the RJ45 communication port

z. Integrations - Connected Room

1) The controller shall be capable of controlling lighting fixtures thru various open protocols listed below. this shall be achieved thru on-board I/O on the controller or via expansion modules (of the BACnet/IP controller) and will be capable of supporting the following:

a) The DALI expansion module shall be certified and capable of full DALI2 control for individual and groups of lights (up to 32 ballasts or LED drivers and a maximum of 16 groups).

b) During zero light output it shall be possible to fully shut down the ballasts thereby minimizing any leakage current.

c) The controller / expansion module shall be certified for multi-master functionality thereby allowing DALI pushbuttons sensors and dimmers to be mounted on the DALI communication bus.

d) The DALI expansion module shall be rated to 10A in total (Max 5A per channel)

e) The DALI expansion module shall support DALI version-1 control gear

f) The DALI expansion module shall support DALI-1 version control gear.

g) The DALI expansion module shall support Discharge lamps

h) The DALI expansion module shall support LED

i) The DALI expansion module shall support color control (Device type 8)

j) The DALI expansion module shall support feedback from control gear (including lamp failure feedback)

k) The DALI expansion module shall support addressing and grouping of control gear.

l) The 0-10V expansion modules shall be capable of on/off/dim of light using 0-10V dimming signal.

m) During zero light output it shall be possible to fully shut down the ballasts thereby minimizing any leakage current.

n) It shall be possible to interface and control lighting that are dimmed using Phase cut dimming the controller/interface shall be capable of automatically detecting the appropriate leading or trailing edge control mechanism that may be needed depending on the type of load.

2) The controller shall be capable of controlling blinds and shades thru various open protocols listed below. this shall be achieved thru on-board I/O on the controller or via expansion modules (of the BACnet/IP controller) and will be capable of supporting the following:

a) The controller/ expansion modules shall be capable of interfacing with and controlling blind motors that uses low voltage Standard Motor Interface (SMI) communication.

b) The controller/ expansion modules shall be capable of interfacing with and controlling blind motors that use high voltage SMI communication.

c) The controller/ expansion modules shall be capable of interfacing with and controlling blind motors using low voltage (24V) relays.

d) The controller/ expansion modules shall be capable of interfacing with and controlling blind motors using line voltage relays.

3) It shall be possible for the controller to interface with third party Modbus devices sensors, pushbuttons and glass touch panels

4) It shall be possible for the controller to interface with KNX sensors and push button devices

5) It shall be possible for the controller to communicate to wireless devices such as sensors, power meters, and wireless lighting control gateways via Zigbee 3.0.

   a) Controllers using earlier Zigbee standards shall not be acceptable.

6) It shall be possible to rezone and partition spaces using a graphical software, that works using floor plan maps and allows the user to create zones by positioning HVAC equipment, lights, blinds and sensors directly on the map. It shall then be possible to assign them to zones

7) It shall be possible to connect to four advanced sensors with capability for sensing occupancy and light levels. The sensor shall be powered by the controller and will not require batteries for operation.

8) it shall be possible to control lights/ blinds and HVAC functions such as fan speed and temperature via an optional remote control that can be located anywhere conveniently within the room or mounted on the wall and communicates to the controller securely via blue-tooth

9) It shall be possible for the controller to measure the power consumed by the different devices connected to the controller such as lighting HVAC and blinds

10) Lighting Control Interfaces

   a) Mobile Based Personal Control Interface - an integrated mobile application shall provide current status of the light and blind in the room and enable each room occupant with the ability to:

   b) Dim, brighten lights and turn them on and off

   c) And for blinds: tilt, vertical up or down

   d) Ability to select scenes

   e) Control HVAC

11) The Connected Room Solution will be fully programmable capable of supporting different control strategies locally.

12) Standard applications shall be available for download from a central repository, which will allow common configurations such as those listed below to be easily configured.

   a) Occupied state

   b) Unoccupied state

   c) Load Shed Mode

   d) Daylight Harvesting

   e) Time Clock Scheduling

13) The integration modules shall comply with the following regulatory certifications

   a) CE - EMCD 2014/30/EU

   b) CE LVD 2014/35/EU

   c) FCC CFR 47 Part 15 Class B

   d) RCM

   e) RoHS 2011/65/EU

   f) China RoHS SJ/T 11364-2014

   g) UL2043 (Plenum space mounting)

   h) UL916 Energy Management

21. The BACnet/IP Fieldbus controller for remote IO

   a. It shall be possible to extend Inputs / Outputs required in NSC or BACnet/IP Fieldbus Controllers over the IP network

   b. The BACnet/IP IO expansion device shall be equipped with 2x 10/100bT Ethernet communication ports with active switch supporting the following configurations:

1) Supporting IPv4 addressing
2) Supporting Static IP setting, DHCP client and Auto-IP address acquisition
3) It shall be possible to disable Ethernet port 2

c. The BACnet/IP IO expansion device shall support daisy and RSTP topologies

d. The BACnet/IP I/O expansion device shall be capable of sharing its local I/O resources with one or multiple applications distributed across one or multiple NSCs or BACnet/IP Fieldbus Controllers.

e. The BACnet/IP I/O expansion device shall support BACnet Alarm and Trend locally

f. Outputs of the BACnet/IP I/O expansion device shall support user configurable fallback value that is triggered in case of communication disruption.

F. Commissioning Tool - The BACnet/IP Fieldbus controllers shall be supported via a dedicate mobile based commissioning tool for configuration, programming, air balancing and I/O checkout:

1. The Commissioning Tool shall be supported across: iOS, Android and Windows 10 platforms

2. The Commissioning Tool shall be available for download on App Store, Google Store and Windows Store

3. Commissioning Tool Interface to BACnet/IP Fieldbus controllers shall be via Bluetooth or via a Wi-Fi access point on the LAN

4. Functionality

a. Device Configuration – the Commissioning Tool shall be able to set or edit all Network configurations associated with the BACnet/IP Fieldbus controller

b. Programming – The Commissioning Tool shall be able to load offline engineered applications directly in to the controller directly

c. Air Balancing

1) The Commissioning Tool shall allow the air balancer to manually control the action of the actuator including the following function: open VAV damper, close VAV damper, open all VAV dampers, and close all VAV dampers.
2) The Commissioning Tool shall be able to generate Air Balancing report

d. DALI lighting commissioning

1) The Commissioning tool shall allow the engineer to test the operation of DALI control gear.
2) The commissioning tool shall allow the engineer to wink the DALI control gear.
3) The commissioning tool shall indicate the status of the DALI control gear.

e. 0-10V lighting commissioning

1) The Commissioning tool shall allow the engineer to test the operation of 0-10V lights.
2) The commissioning tool shall allow the engineer to wink the 0-10V lights.

f. Blind and shade commissioning

1) The Commissioning tool shall allow the engineer to test the operation of blinds and shades.

5. IO Checkout

a. The Commissioning Tool shall be able to support overriding of the outputs and reading value of inputs live that includes light and blind points and their configuration

b. The Commissioning Tool shall be able to support generation of I/O checkout report

6. There shall be no limit to the number of Commissioning Tools that can be used on a network segment.

G. Intelligent Space Sensors - The BACnet/IP Fieldbus controller shall support a dedicated RJ45 communication port to communicate and power up to 4 intelligent wall mount sensors without the use of on board inputs or outputs

1. The Intelligent Space Sensor shall communicate with the BACnet/IP Fieldbus controller through the sensor port and via category 5 or category 6 cable
2. The Intelligent Space Sensor shall provide 2 RJ45 communication ports that will allow communication with parent BACnet/IP Field controller upstream and additional Intelligent Space Sensors downstream
3. The Intelligent Space Sensor shall provide ambient space condition sensing without the use of hardware I/O

H. Each Intelligent Space Sensor shall provide a color touch display with:

1. Minimum 61 mm (2.4”) by 61 mm (2.4”) display
2. Backlit

I. The Intelligent Space Sensor shall be capable of displaying measured space temperature from 0 to 50 °C (32 to 122 °F) with accuracy of ±0.2 °C (±0.4 °F) selectable for 0.1 or 1 degree display resolution of °F or °C

1. Sensing Element: 10k Type 3 Thermistor
2. Accuracy of ±0.2 °C (±0.4 °F)
3. Resolution: 0.1 or 1 degree display resolution
4. Range: 0 to 50 °C (32 to 122 °F)

J. The Intelligent Space Sensor shall have the option for humidity sensor support sensing humidity from 0 % RH to 100 % RH Digital humidity indication (selectable for 0.1 or 1% RH with selectable display resolution of 0.1 or 1 % RH

1. Accuracy: ±2 % RH
2. Resolution: 0.1 or 1 % RH
3. Range: 0 % RH to 100 % RH

K. The Intelligent Space Sensor shall have the option for support of CO2 sensor with display resolution with 0 to 2000 ppm resolution

1. Accuracy: ±30 ppm ±2% of measured value
2. Range: 0 to 2,000 ppm
3. Operating elevation: 0 to 16,000 ft.
4. Temperature dependence: 0.11% FS per ˚F
5. Stability: <2% of FS over life of sensor (15 years)
6. Sensing method: Non-dispersive infrared (NDIR), diffusion sampling

L. The Intelligent Space Sensor shall have the option for motion sensor

M. Display options: The Intelligent Space Sensor shall be capable of displaying the following elements:

1. Space temperature
2. Cooling space temperature set point
3. Heating space temperature set point
4. Current heating or cooling mode
5. Current occupancy mode
6. Fan speed
7. Current time
8. Light control
9. Blind adjustment

10. Scene selection

2.6 BACNET FIELDBUS AND BACNET SDCUS

A. Networking
1. IP Network: All devices that connect to the WAN shall be capable of operating at 10 megabits per second or 100 megabits per second.
2. IP To Field Bus Routing Devices
   a. A Network Server Controller shall be used to provide this functionality.
   b. These devices shall be configurable locally with IP crossover cable and configurable via the IP network.
   c. The routing configuration shall be such that only data packets from the field bus devices that need to travel over the IP level of the architecture are forwarded.

B. Field Bus Wiring and Termination
1. The wiring of components shall use a bus or daisy chain concept with no tees, stubs, or free topology.
2. Each field bus shall have a termination resistor at both ends of each segment.
3. The field bus shall support the use of wireless communications.

C. Repeaters
1. Repeaters are required to connect two segments.
2. Repeaters shall be installed in an enclosure. The enclosure may be in an interstitial space.

D. Field Bus Devices
1. General Requirements
   a. Devices shall have a light indicating that they are powered.
   b. Devices shall be locally powered. Link powered devices (power is furnished from a central source over the field bus cable) are not acceptable.
   c. Application programs shall be stored in a manner such that a loss of power does not result in a loss of the application program or configuration parameter settings. (Battery backup, flash memory, etc.)

E. Advance Application Controllers (B-AAC)
1. The key characteristics of a B-AAC are:
   a. They have physical input and output circuits for the connection of analog input devices, binary input devices, pulse input devices, analog output devices, and binary output devices. The number and type of input and output devices supported will vary by model.
   b. They may or may not provide support for additional input and output devices beyond the number of circuits that are provided on the basic circuit board. Support for additional I/O shall be provided by additional circuit boards that physically connect to the basic controller.
   c. The application to be executed by a B-AAC is created by an application engineer using the vendor's application programming tool.
   d. If local time schedules are embedded, the B-AAC shall support the editing of time schedule entries from any BACnet OWS that supports the BACnet service for writing of time schedule parameters.
   e. If local trend logging is embedded, the B-AAC shall support the exporting of trend log data to any BACnet OWS that supports the read range BACnet service for trending.
   f. If local alarm message initiation is embedded, the B-AAC shall:
      1) Deliver alarm messages to any BACnet OWS that supports the BACnet service for receiving alarm messages and is configured to be a recipient off the alarm message.

2) Support alarm acknowledgement from any BACnet OWS that supports the BACnet service for executing alarm/event acknowledgement,

g. Shall support the reading of analog and binary data from any BACnet OWS or Building Controller that supports the BACnet service for the reading of data.

h. Shall support the control of the out of service property and assignment of value or state to analog and binary objects from any BACnet OWS that supports writing to the out of service property and the value property of analog and binary objects.

i. Shall support the receipt and response to Time Synchronization commands from a BACnet Building Controller.

j. Shall support the “Who is” and “I am.” BACnet services.

k. Shall support the “Who has” and “I have.” BACnet services.

2. Analog Input Circuits

a. The resolution of the A/D chip shall not be greater than 0.01 Volts per increment. For an A/D converter that has a measurement range of 0 to 10 VDC and is 10 bit, the resolution is 10/1024 or 0.00976 Volts per increment.

b. For non-flow sensors, the control logic shall provide support for the use of a calibration offset such that the raw measured value is added to the (+/-) offset to create a calibration value to be used by the control logic and reported to the Operator Workstation (OWS).

c. For flow sensors, the control logic shall provide support for the use of an adjustable gain and an adjustable offset such that a two point calibration concept can be executed (both a low range value and a high range value are adjusted to match values determined by a calibration instrument).

d. For non-linear sensors such as thermistors and flow sensors the B-AAC shall provide software support for the linearization of the input signal.

3. Binary Input Circuits

a. Dry contact sensors shall wire to the controller with two wires.

b. An external power supply in the sensor circuit shall not be required.

4. Pulse Input Circuits

a. Pulse input sensors shall wire to the controller with two wires.

b. An external power supply in the sensor circuit shall not be required.

c. The pulse input circuit shall be able to process up to 20 pulses per second.

5. True Analog Output Circuits

a. The logical commands shall be processed by a digital to analog (D/A) converter chip. The 0% to 100% control signal shall be scalable to the full output range which shall be either 0 to 10 VDC, 4 to 20 milliamps or 0 to 20 milliamps or to ranges within the full output range (Example: 0 to 100% creates 3 to 6 VDC where the full output range is 0 to 10 VDC).

b. The resolution of the D/A chip shall not be greater than 0.04 Volts per increment or 0.08 milliamps per increment.

6. Binary Output Circuits

a. Single pole, single throw or single pole, double throw relays with support for up to 230 VAC and a maximum current of 2 amps.

b. Voltage sourcing or externally powered triacs with support for up to 30 VAC and 0.5 amps at 24 VAC.

7. Program Execution

a. Process control loops shall operate in parallel and not in sequence unless specifically required to operate in sequence by the sequence of control.

b. The sample rate for a process control loop shall be adjustable and shall support a minimum sample rate of 1 second.

c. The sample rate for process variables shall be adjustable and shall support a minimum sample rate of 1 second.

d. The sample rate for algorithm updates shall be adjustable and shall support a minimum sample rate of 1 second.

e. The application shall have the ability to determine if a power cycle to the controller has occurred and the application programmer shall be able to use the indication of a power cycle to modify the sequence of controller immediately following a power cycle.

8. Local Interface

a. The controller shall support the connection of a portable interface device such as a laptop computer or vendor unique hand-held device. The ability to execute any tasks other than viewing data shall be password protected. Via this local interface, an operator shall be able to:

1) Adjust application parameters.
2) Execute manual control of input and output points.
3) View dynamic data.

F. Application Specific Devices

1. Application specific devices shall have fixed function configurable applications.
2. If the application can be altered by the vendor's application programmable tool, the device is an advanced application controller and not an application specific device.
3. Application specific devices shall be BTL certified.

G. Room controllers

1. For connected room solutions that do not require integrated lighting and blind busses built into a singular unit, the system shall include a BACnet MS-TP enabled controller specifically designed for room control.
2. The controller shall communicate via BACnet MS-TP. It should also be capable of MODBUS RTU communication.
3. The controller shall be capable of controlling fan coil units, cooling VVT zones with reheat, fin-tube radiators, cabinet heaters, radiant panel heaters, electric re-heat zones, terminal reheats, rooftop units (1H1C, 2H2C, 3H2C, MH2C), or heat pumps, if necessary.
4. The controller shall house an onboard temperature sensor, and options for onboard humidity and occupancy sensor.
5. The controller shall utilize a touch screen interface and have multiple options for casings and fascias. The screen shall be a TFT transmissive LED backlit LCD touchscreen with at least 5 color options.
6. Controller will have password protection to prevent unauthorized access to the configuration menu parameters.
7. The controller will have integrated Zigbee wireless communications with predefined profiles for Zigbee door and window switches, occupancy sensors, water leakage detectors, CO2 sensors, and additional temperature and humidity sensors.
8. The controller will be capable of hosting at least 10 Zigbee sub devices.
9. The controller will be capable of being programmed with customizable scripts via the open programming language Lua. It shall be equipped with at least 256KB of SRAM with 80KB configurable/reserved for Lua scripting purposes.

2.7 DDC SENSORS AND POINT HARDWARE

A. Temperature Sensors

1. Acceptable Manufacturers: Veris Industries
2. All temperature devices shall use precision thermistors accurate to +/- 1 degree F over a range of –30 to 230 degrees F. Space temperature sensors shall be accurate to +/- .5 degrees F over a range of 40 to 100 degrees F.

3. Room Sensor: Standard space sensors shall be available in an [off white][black] enclosure made of high impact ABS plastic for mounting on a standard electrical box. Basis of Design: Veris TW Series
    a. Where manual overrides are required, the sensor housing shall feature both an optional sliding mechanism for adjusting the space temperature setpoint, as well as a push button for selecting after hours operation.
    b. Where a local display is specified, the sensor shall incorporate an LCD display for viewing the space temperature, setpoint and other operator selectable parameters. Using built in buttons, operators shall be able to adjust setpoints directly from the sensor.
4. Duct Probe Sensor: Sensing element shall be fully encapsulated in potting material within a stainless steel probe. Useable in air handling applications where the coil or duct area is less than 14 square feet. Basis of Design: Veris TD Series
5. Duct Averaging Sensor: Averaging sensors shall be employed in ducts which are larger than 14 square feet. The averaging sensor tube shall contain at least one thermistor for every 3 feet, with a minimum tube length of 6 feet. The averaging sensor shall be constructed of rigid or flexible copper tubing. Basis of Design: Veris TA Series
6. Pipe Immersion Sensor: Immersion sensors shall be employed for measurement of temperature in all chilled and hot water applications as well as refrigerant applications. Provide sensor probe length suitable for application. Provide each sensor with a corresponding pipe-mounted sensor well, unless indicated otherwise. Sensor wells shall be stainless steel for non-corrosive fluids below 250 degrees F and 300 series stainless steel for all other applications. Basis of Design: Veris TI Series
7. Outside Air Sensor: Provide the sensing element on the building's north side. Sensing element shall be fully encapsulated in potting material within a stainless steel probe. Probe shall be encased in PVC solar radiation shield and mounted in a weatherproof enclosure. Operating range -40 to 122 F, Basis of Design: Veris TO Series
8. A pneumatic signal shall not be allowed for sensing temperature.

B. Humidity Wall Transmitter
1. Acceptable Manufacturer: Veris Industries
2. Transmitters shall be accurate to +/- 2 % at full scale.
3. Transmitter shall have replaceable sensing element.
4. Sensor type shall be thin-film capacitive.
5. Sensor element shall contain multipoint calibration on-board in nonvolatile memory
6. Operating range shall be 0 - 100% RH noncondensing, 50 to 95 F
7. Output shall be field selectable 4-20 mA or 0-5/0-10 VDC.
8. Transmitter shall accept 12-30 VDC or 24 VAC supply power.
9. Transmitter shall be available in an off white enclosure made of high impact ABS plastic for mounting on a standard electrical box.
10. Transmitter shall have option of having an LCD display
11. Transmitter shall have option of being NIST certified
12. Transmitter shall have option of an integrated temperature sensor
13. Basis of Design: Veris HWL Series

C. Humidity Duct Transmitter
1. Acceptable Manufacturer: Veris Industries
2. Transmitters shall be accurate to +/- 2 % at full scale.
3. Transmitter shall be fully encapsulated in potting material within a stainless steel probe.
4. Transmitter shall have replaceable sensing element.
5. Sensor type shall be thin-film capacitive.
6. Sensor element shall contain multipoint calibration on-board in nonvolatile memory
7. Operating range shall be 0 - 100% RH noncondensing, -40 to 122 F

8. Output shall be 4-20 mA or 0-5/0-10 VDC.
9. Transmitter shall accept 12-30 VDC or 24 VAC supply power.
10. Transmitter shall have option of being NIST certified
11. Transmitter shall have option of an integrated temperature sensor
12. Basis of Design: Veris HD Series

D. Humidity Outdoor Transmitter
1. Acceptable Manufacturer: Veris Industries
2. Transmitters shall be accurate to +/- 2% at full scale.
3. Transmitter shall be fully encapsulated in potting material within a stainless steel probe. Probe shall be encased in PVC solar radiation shield and mounted in a weatherproof enclosure.
4. Transmitter shall have replaceable sensing element.
5. Sensor type shall be thin-film capacitive.
6. Sensor element shall contain multipoint calibration on-board in nonvolatile memory
7. Operating range shall be 0 - 100% RH noncondensing, -40 to 122 F
8. Output shall be 4-20 mA or 0-5/0-10 VDC.
9. Transmitter shall accept 12-30 VDC or 24 VAC supply power.
10. Transmitter shall have option of being NIST certified
11. Transmitter shall have option of an integrated temperature sensor
12. Basis of Design: Veris HO Series

E. Carbon Dioxide Wall Transmitter:
1. Acceptable Manufacturer: Veris Industries
2. Sensor type shall be Non-dispersive infrared (NDIR).
3. Accuracy shall be ±30 ppm ±2% of measured value with annual drift of ±10 ppm. Minimum five year recommended calibration interval.
4. Repeatability shall be ±20 ppm ±1% of measured value
5. Response Time shall be <60 seconds for 90% step change
6. Outputs shall be field selectable [Analog: 4-20mA or 0-5/0-10VDC][Protocol: Modbus or BACnet] with [SPDT Relay 1A@30VDC][temperature setpoint slider]
7. Transmitter shall accept 12-30 VDC or 24 VAC supply power.
8. Temperature Range: [32° to 122°F (CO_2 only)][50° to 95°F (with humidity option)]
9. Output range shall be programmable 0-2000 or 0-5000 ppm
10. Transmitter shall be available in an off white enclosure for mounting on a standard electrical box.
11. Transmitter shall have an option of an LCD display for commissioning and provide additional faceplate to conceal LCD display where occupants may misinterpret CO_2 readings.
12. Transmitter shall have option of an integrated temperature sensor and/or humidity sensor
13. Basis of Design: Veris CWL

F. Carbon Dioxide Duct Transmitter:
1. Acceptable Manufacturer: Veris Industries
2. Sensor type shall be Non-dispersive infrared (NDIR).
3. Accuracy shall be ±30 ppm ±2% of measured value with annual drift of ±10 ppm. Minimum five year recommended calibration interval.
4. Repeatability shall be ±20 ppm ±1% of measured value
5. Response Time shall be <60 seconds for 90% step change
6. Outputs shall be field selectable Analog: 4-20mA or 0-5/0-10VDC with SPDT Relay 1A@30VDC
7. Transmitter shall accept 12-30 VDC or 24 VAC supply power.

8. Temperature Range: 32° to 122°F
9. Output range shall be programmable 0-2000 or 0-5000 ppm
10. Enclosure shall not require remote pickup tubes and make use of integrated H-beam probe to channel air flow to sensor.
11. Enclosure lid shall require no screws and make use of snap on features for attachment
12. Enclosure shall be made of high impact ABS plastic
13. Transmitter shall have option of an LCD display
14. Transmitter shall have option of an integrated temperature sensor and/or humidity sensor
15. Basis of Design: Veris CDL

G. Air Pressure Transmitters.
1. Acceptable Manufacturers: Veris Industries
2. Sensor shall be microprocessor profiled ceramic capacitive sensing element
3. Transmitter shall have 14 selectable ranges from 0.1 – 10” WC
4. Transmitter shall be +/- 1% accurate in each selected range including linearity, repeatability, hysteresis, stability, and temperature compensation.
5. Transmitter shall be field configurable to mount on wall or duct with static probe
6. Transmitter shall be field selectable for Unidirectional or Bidirectional
7. Maximum operating pressure shall be 200% of design pressure.
8. Output shall be field selectable 4-20 mA or 0-5/0-10 VDC linear.
9. Transmitter shall accept 12-30 VDC or 24 VAC supply power
10. Response time shall be field selectable T95 in 20 sec or T95 in 2 sec
11. Transmitter shall have an LCD display
12. Units shall be field selectable for WC or PA
13. Transmitter shall have provision for zeroing by pushbutton or digital input.
14. Transmitter shall be available with a certification of NIST calibration
15. Basis of Design: Veris model PXU.

H. Liquid Differential Pressure Transmitters:
1. Acceptable Manufacturer: Veris Industries
2. Transmitter shall be microprocessor based
3. Transmitter shall use two independent gauge pressure sensors to measure and calculate differential pressure
4. Transmitter shall have 4 switch selectable ranges
5. Transmitter shall have test mode to produce full-scale output automatically.
6. Transmitter shall have provision for zeroing by pushbutton or digital input.
7. Transmitter shall have field selectable outputs of 0-5V, 0-10V, and 4-20mA.
8. Transmitter shall have field selectable electronic surge damping
9. Transmitter shall have an electronic port swap feature
10. Transmitter shall accept 12-30 VDC or 24 VAC supply power
11. Sensor shall be 17-4 PH stainless steel where it contacts the working fluid.
12. Performance:
    a. Accuracy shall be ±1% F.S. and ±2% F.S. for lowest selectable range
    b. Long term stability shall be ±0.25%
    c. Sensor temperature operating range shall be -4° to 185°F
    d. Operating environment shall be 14° to 131°F; 10-90% RH noncondensing
    e. Proof pressure shall be 2x max. F.S. range

f. Burst pressure shall be 5x max. F.S. range

13. Transmitter shall be encased in a NEMA 4 enclosure
14. Enclosure shall be white powder-coated aluminum
15. Transmitter shall be available with a certification of NIST calibration
16. Transmitter shall be preinstalled on a bypass valve manifold
17. Basis of Design: Veris PW

I. Current Sensors

1. Current status switches shall be used to monitor fans, pumps, motors and electrical loads. Current switches shall be available in split core models, and offer either a digital or an analog signal to the automation system. Acceptable manufacturer is Veris Industries

J. Current Status Switches for Constant Load Devices

1. Acceptable Manufacturer: Veris Industries
2. General: Factory programmed current sensor to detect motor undercurrent situations such as belt or coupling loss on constant loads. Sensor shall store motor current as operating parameter in non-volatile memory. Push-button to clear memory.
3. Visual LED indicator for status.
4. Split core sensor, induced powered from monitored load and isolated to 600 VAC rms. Sensor shall indicate status from 0.5 A to 175 A.
5. Normally open current sensor output. 0.1A at 30 VAC/DC.
6. Basis of Design: Veris Model H608.

K. Current Status Switches for Constant Load Devices (Auto Calibration)

1. Acceptable Manufacturer: Veris Industries.
2. General: Microprocessor based, self-learning, self-calibrating current switch. Calibration-free status for both under and overcurrent, LCD display, and slide-switch selectable trip point limits. At initial power-up automatically learns average current on the line with no action required by the installer
3. Split core sensor, induced powered from monitored load and isolated to 600 VAC rms. Sensor shall indicate status from 2.5 A to 200 A.
4. Display: Backlit LCD; illuminates when monitored current exceeds 4.5A
5. Nominal Trip Point: ±40%, ±60%, or on/off (user selectable)
6. Normally open current sensor output. 0.1A at 30 VAC/DC.
7. Basis of Design: Veris Model H11D.

L. Current Status Switches for Variable Frequency Drive Application

1. Acceptable Manufacturer: Veris Industries.
2. General: Microprocessor controlled, self-learning, self-calibrating current sensor to detect motor undercurrent and overcurrent situations such as belt loss, coupling shear, and mechanical failure on variable loads. Sensor shall store motor current as operating parameter in non-volatile memory. Push-button to clear memory and relearn.
3. Visual LED indicator for status.
4. Alarm Limits: ±20% of learned current in every 5 Hz freq. band
5. Split core sensor, induced powered from monitored load and isolated to 600 VAC rms. Sensor shall indicate status from 1.5 A to 150 A and from 12 to 115 Hz.
6. Normally open current sensor output. 0.1A at 30 VAC/DC.
7. Basis of Design: Veris Model H614.

M. Liquid Flow, Insertion Type Turbine Flowmeter:

1. Acceptable Manufacturer: Veris Industries

2. General: Turbine-type insertion flow meter designed for use in pipe sizes 1 1/2” and greater. Available in hot tap configuration with isolation valves and mounting hardware to install or remove the sensor from pipeline that is difficult to shut down or drain
3. Performance:
   a. Accuracy ±1% of rate over optimum flow range; ≥10 upstream and ≥5 downstream straight pipe diameters, uninterrupted flow
   b. Repeatability ±0.5%
   c. Velocity Range: 0.3 to 20 FPS
   d. Pressure Drop 0.5 psi or less @ 10 ft/sec for all pipe sizes 1.5” dia and up
   e. Pressure Rating: 1000 psi @ 70°F
4. Maximum Temperature Rating: 300°F
5. Materials: Stainless Steel or Brass body; Stainless steel impeller
6. Transmitter:
   a. Power Supply: 12 - 30VAC or 8 - 35VDC.
      1) Output: [Frequency][4-20 mA][Scaled Pulse]
   b. Temperature Range: 14° to 150°F
   c. Display: 8 character 3/8" LCD (Optional)
   d. Enclosure: NEMA 4, Polypropylene with Viton® sealed acrylic cover
7. Basis of Design: Veris SDI series

N. Liquid Flow/Energy Transmitter, Non-invasive Ultrasonic (Clamp-on):
1. Acceptable Manufacturer: Veris Industries
2. General: Clamp-on digital correlation transit-time ultrasonic flow meter designed for clean liquids or liquids containing small amounts of suspended solids or aeration. Optional temperature sensors for BTU calculations.
3. Liquid: water, brine, raw sewage, ethylene, glycol, glycerin, others. Contact manufacturer for other fluid compatibility
4. Pipe Surface Temperature: Pipe dia 1/2” to 2”:-40-185°F; Pipe dia > 2”: -40-250°F
5. Performance:
   a. Flow Accuracy:
      1) Pipe dia 1/2” to 3/4” 1% of full scale
      2) Pipe dia 1” to 2” 1% of reading from 4-40 FPS
      3) Pipe dia 2” to 100” 1% of reading from 1-40 FPS
   b. Flow Repeatability ±0.01% of reading
   c. Velocity Range: (Bidirectional flow)
      1) Pipe dia 1/2” to 2” 2 to 40 FPS
      2) Pipe dia 2” to 100” 1 to 40 FPS
   d. Flow Sensitivity 0.001 FPS
   e. Temperature Accuracy (energy): 32-212°F; Absolute 0.45°F; Difference 0.18°F
   f. Temperature Sensitivity: 0.05°F
   g. Temperature Repeatability: ±0.05% of reading
6. Transmitter:
   a. Power Supply: 95 to 264 VAC, 47 to 63 Hz or 10 to 28 VDC.
   b. Output: [RJ45][Modbus TCP/IP][Ethernet/IP][BACnet/IP][Pulse][4-20 mA][RS-485 Modbus RTU}
   c. Temperature Range: -40 to +185°F
   d. Display: 2 line backlit LCD with keypad
   e. Enclosure: NEMA 4, (IP65), Powder-coated aluminum, polycarbonate
7. Agency Rating: UL 1604, EN 60079-0/15, CSA C22.2, CSA Class 1 (Pipe > 2”)

8. Basis of Design: Veris FST & FSR series

O. Analog Electric/Pneumatic Transducer:
1. Acceptable Manufacturer: Veris Industries
2. General: Micro-controlled poppet valve for high accuracy and with no air loss in the system. Field configurable for pressure sensing in multiple applications.
3. Power Supply: 22-30VDC, 20-30VAC
4. Control Input: 4-20mA, 0-10V, 0-5V; jumper selectable
5. Performance:
   a. Accuracy: 1% full scale; combined linearity, hysteresis, repeatability
   b. Compensated Temperature Range: 25° to 140°F
   c. Temp Coefficient: ±0.05%°C
   d. Operating Environment: 10-90% RH, non-condensing; 25° to 140°F
6. Supply Pressure: 45 psig max.
7. Manual Override: Jumper selectable mode, digital pushbutton adjust
8. Alarm Contact: 100mA@30VAC/DC (Optional)
9. Control Range 0-20 psig or 3-15 psig; jumper selectable
10. Pressure Differential 0.1 psig (supply to branch)
11. Pressure Indication Electronic, 3-1/2 digit LCD
12. Housing: Mounted on standard SnapTrack; Optional clear dust cover
13. Basis of Design: Veris EP Series

P. Water Control Valves
1. Ball Valves
   a. ½" to ¾" Ball Valve
      1) Forged brass body rated at no less than 600 psi, chrome plated brass ball with blowout proof stem or optional stainless steel ball with blowout proof stem,
      2) Valves are to be in two-way and three-way configurations.
      3) Connection: Female NPT end fittings, Teflon® PTFE seat, characterizing disc glass filled PEEK providing equal percentage flow curve on two-way valve.
      4) Operating Temperature 20…250°F chilled or hot water with up to 60% glycol solution.
      5) Two-way and Bypass port should be ANSI Class IV (0.01% of Cv) seat leakage.
      6) Rangeability must be at least 300:1.
      7) Tool-less actuator connection.
      8) System Static Pressure Limit should be 600 psig (4137 Pa)
      9) Basis of Design: Schneider Electric VBB/VBS Ball Valves, or approved equal.
   b. ½" to 3" 2-way and ½" to 2" 3-way Ball Valves
      1) Valves must be for control of hot or chilled water, or solutions of up to 50% glycol.
      2) Ball valves must have close-offs of 40…130 psi depending on size.
      3) Valves will provide CVs from 0.33…266 depending on size.
      4) Valve characterizing insert, is to be made of glass-filled Noryl™ and provide equal percentage flow.
      5) Valve body is to be made of forged brass ASTM B283-06 and rated for static pressure of 360 psi at fluid temperatures of 20…250°F (-7…121°C).
      6) All valves are to have balls made of nickel/chromium plated brass with two-way valves having stainless steel balls as an option. All valve stems are to be stainless steel with reinforce Teflon® EPDM O-ring seals.
      7) 2-way valves are to be ANSI Class IV (0.01% of Cv) shutoff. 3-way valves are to be ANSI Class IV (0.01% of Cv piped coil-side outlet to the port A only.
      8) Fluid (water) temperature are a minimum 20°F (-7°C) and a maximum of 250°F (121°C).
      9) Basis of Design: Schneider Electric VB-2000, or approved equal.

2. Globe Valves (Bronze ½" to 2")
   a. Control Valves: Factory fabricated, with body material, and pressure class based on maximum pressure and temperature rating of piping system with a body rating of not less than 400 psig at 150°F, 321 psig at 281°F per ANSI B16.15.
   b. Valves two way NPS 2" and Smaller: Operator, stem and plug assembly, and spring-loaded PTFE/EPDM valve stem packing cartridge must be removable for future replacement to restore the valves back to their original condition. Material grade properties must meet the fluid temperature and pressure requirements:
      1) Standard duty bronze body, 316 stainless steel vertical stem, brass plug, soft seal, and bronze seat, renewable packing cartridge, and screwed/sweat/flared ends. Valves shall have allowable media temperature of 20°F …281°F to assure reliability with dual temperature applications.
      2) Heavy duty bronze body, 316 stainless steel vertical stem, 316 stainless steel plug, soft seal, and 316 stainless steel seat, renewable packing cartridge, and screwed ends. Valves shall have allowable media temperature of 20°F …340°F to assure to assure reliability with dual temperature applications.
      3) High temperature bronze body, 316 stainless steel vertical stem, 316 stainless steel plug, and 316 stainless steel seat, renewable packing cartridge, and screwed ends. Valves shall have allowable media temperature of 20°F …400°F.
   c. Two-way fluid system globe valves shall have the following characteristics:
      1) Rangeability: Greater than 100:1 for all valves with flow coefficients of 0.4 and higher to provide stable control under light load conditions.
      2) Maximum Allowable Seat Leakage: Standard and heavy duty valves must be designed to meet ANSI Class V (0.0005 ml per minute per "of orifice diameter per psi differential) up to 35 psi close off differential pressure and ANSI Class IV seat leakage (maximum 0.01% of full open valve capacity) above 35 psi with appropriate actuator. High temperature valves must meet ANSI Class III seat leakage (maximum 0.1% of full open valve capacity).
      3) The valve must be able to operate with a full-open operating differential of no less than 87 psi.
      4) Flow Characteristics: Modified equal percentage characteristics for standard duty water applications and modified linear for heavy duty and high temperature steam applications with gradual opening for light loads.
      5) Sizing:
         a) Two Position Water: Water: Line size or size using a differential pressure of 1 psi.
         b) Modulating Water: 5 PSI or twice the load pressure drop.
         c) Pressure drop across steam valve at a maximum flow of 80 percent of inlet pressure up to 15 psig and 42% of absolute (gage pressure + 14.7) inlet pressure above 15 psig inlet.
         d) 100 psi saturated steam maximum inlet pressure for heavy duty bronze body globe valves ½"…2".
         e) 150 psi saturated steam maximum inlet pressure for high temperature bronze body globe valves ½"…2".
         f) 35 psi saturated steam maximum inlet pressure for standard duty bronze body globe valves ½"…2".
   d. Valves 3-Way mixing (two inlets and one outlet) NPS 2" and Smaller:
      1) Operator, stem and plug assembly, and spring-loaded PTFE/EPDM valve stem packing cartridge must be removable for future replacement to restore the valves back to their original condition. Material grade properties must meet the fluid temperature and pressure requirements:
         a) Standard duty bronze body, 316 stainless steel vertical stem, brass plug, and bronze seat, renewable packing cartridge, and screwed or sweat ends. Valves shall have allowable media temperature of 20°F…281°F to assure reliability with dual temperature applications.
         b) Heavy duty bronze body, 316 stainless steel vertical stem, 316 stainless steel plug, and 316 stainless steel seat, renewable disc and packing cartridge, and

screwed ends. Valves shall have allowable media temperature of 20°F …340°F to assure reliability with dual temperature applications.

e. 3-Way mixing hydronic system globe valves shall have the following characteristics:
   1) Rangeability: Greater than 100:1 for all valves to provide stable
   2) Maximum Allowable Seat Leakage: A port must be designed to meet ANSI Class V (0.0005 ml per minute per "of orifice diameter per psi differential) up to 35 psi close off differential pressure and ANSI IV seat leakage (maximum 0.01% of full open valve capacity) above 35 psi with appropriate actuator. B port must meet ANSI Class III seat leakage (maximum 0.1% of full open valve capacity).
   3) The valve must be able to operate with a full-open operating differential of 87 psi.
   4) Flow Characteristics: Modified linear characteristics with gradual opening for light loads.
   5) Sizing: Modulating Water: Minimum 5 psi or at least equal to the load pressure drop.

f. Valves 3-Way diverting (one inlet and two outlets) NPS 2" and Smaller:
   1) Operator, stem and plug assembly, and spring-loaded PTFE/EPDM valve stem packing cartridge must be removable for future replacement to restore the valves back to their original condition. Valves must be designed specifically for diverting service, and mixing valves designed for mixing service must not be used for diverting applications. Material grade properties must meet the fluid temperature and pressure requirements:
      a) Standard duty bronze body, 316 stainless steel vertical stem, brass plug, and bronze seat, renewable disc and packing cartridge, and screwed ends. Valves shall have allowable media temperature of 20°F …281°F to assure reliability with dual temperature applications.

g. 3-Way diverting hydronic system globe valves shall have the following characteristics:
   1) Rangeability: Greater than 100:1 for all valves to provide stable control under light load conditions.
   2) Maximum Allowable Seat Leakage: ANSI Class III seat leakage (maximum 0.1% of full open valve capacity).
   3) Maximum Allowable Pressure Differential: 35 psi in.an open position.
   4) Flow Characteristics: Modified linear characteristics with gradual opening for light loads.
   5) Sizing:
      a) Modulating Water: Minimum 5 psi or at least equal to the load pressure drop.

h. Required Certifications: Pressure Equipment Directive (PED 97/23/EC), RoHS (Restriction of Hazardous Substances) and REACH (Regulation, Evaluation, Authorization, and Restriction of Chemicals), Canadian Registration Number.

i. Valve and Operator: To assure maximum performance and operation of the valve assembly both the valve and the actuator must be tested and approved by the valve manufacturer to assure compatibility of all components and performance to the specifications.

j. Basis of Design: Schneider Electric Venta VB-7000, or approved equal.

3. Butterfly Valves

a. Valve body are to be polyester coated iron ASTM A126 lug mating with ANSI class 125/150 flanges.

b. Disc Type: Ductile iron nylon 11 coated.

c. Valve Stem:
   1) 2…8" 416 stainless steel double D stem.
   2) 10…12" 316 stainless steel double D stem.
   3) 14" and larger: stainless steel round shaft woodruff key slot.

d. Valve seat: EPDM tongue and groove seat and molded O-ring flange seat

e. Flow Characteristics: Modified equal percentage.

f. Close-Off Pressure Rating: Bubble-tight shutoff (no leakage).

g. Valve fluid temperature rating: -40…250°F (-40…121°C) 9. Valve will have two (2) inch extended neck (because of heat). 10. Valve must except pneumatic or electric/electronic actuators 11. Valves must have a minimum of a two (2) year warranty.

h. Valve will have two (2) inch extended neck (because of heat).

i. Valve must accept pneumatic or electric/electronic actuators.

j. Valves must have a minimum of a two (2) year warranty.

4. Flanged Valves

a. Bodies: Shall be American Factory fabricated with ASTM A 126 Class B cast iron body material with the pressure class within the maximum pressure and temperature rating of the piping system. (125 body rating with not less than 200 psig at 150°F, decreasing to 169 psig at 281F per ANSA B16.1)

b. Serviceability: 2-Way valve operators, stem and plug assemblies and spring-loaded PTFE/EPDM valve stem packing cartridges must be removable for future replacement to restore the valves back to their original condition.

c. Construction: Material grades must meet the fluid temperature and pressure requirement temperatures of 20°F …281°F to assure reliability throughout all application temperature ranges.

d. Packings: Shall be cartridges suitable for replacement as units withstanding the full operating temperature ranges, including daily and seasonal fluctuations of water, 60% glycol and steam fluids.

e. Characteristics

1) Rangeability: Two way,100:1 and greater for stable control under light load.
2) Shutoff, 2-Way: Leakage allowed: ANSI Class IV (0.01% of max flow)
3) 3-Way: Leakage allowed: ANSI Class III (0.1% of max flow)
4) Flow curves: 2-Way modified equal percentage characteristic.
5) Mixing and Diverting: Linear, modified with gradual opening for light loads.

f. Piping

1) Diverting valves, with the common port at the bottom can be used for mixing.
2) Mixing valves with the common port at the end must not be used for diverting applications.

g. Sizing

1) Two Position Water: Line size or size using a differential pressure of 1 psi.
2) Modulating Water: 5 PSI or twice the load pressure drop
3) Steam, 2-Way: maximum pressure drop across the valve at a maximum flow of 80 percent of inlet pressure up to 15 psig. Above 15 psig inlet, 42% of absolute (gage pressure + 14.7) inlet pressure.

h. Certifications for All Models: Pressure Equipment Directive (PED 97/23/EC), RoHS (Restriction of Hazardous Substances) and REACH (Regulation, Evaluation, Authorization, and Restriction of Chemicals

i. Basis of Design: Schneider Electric VB-8000 and VB-9000 valves, or approved equal.

Q. Steam Control Valves

1. ½"…2" Steam Service Designed Globe Valve

a. Body material, and pressure class based on maximum pressure and temperature rating of piping system with a body rating of not less than 400 psig at 150°F, 321 psig at 281°F per ANSI B16.15

b. High temperature spring-loaded PTFE/EPDM valve stem packing cartridge must be removable for future replacement to restore the valves back to their original condition. Material grade properties must meet the fluid temperature and pressure requirements:

1) Standard duty bronze body, 316 stainless steel vertical stem, brass plug, soft seal, and bronze seat, renewable packing cartridge, and screwed/sweat/flared ends.

Valves shall have allowable media temperature of 20°F …281°F to assure reliability with dual temperature applications.

2) Heavy duty bronze body, 316 stainless steel vertical stem, 316 stainless steel plug, soft seal, and 316 stainless steel seat, renewable packing cartridge, and screwed ends. Valves shall have allowable media temperature of 20°F …340°F to assure to assure reliability with dual temperature applications.

3) High temperature bronze body, 316 stainless steel vertical stem, 316 stainless steel plug, and 316 stainless steel seat, renewable packing cartridge, and screwed ends. Valves shall have allowable media temperature of 20°F …400°F.

c. Two-way fluid system globe valves shall have the following characteristics:

1) Rangeability: Greater than 100:1 for all valves with flow coefficients of 0.4 and higher to provide stable control under light load conditions.

2) Maximum Allowable Seat Leakage: Standard and heavy duty valves must be designed to meet ANSI Class V (0.0005 ml per minute per "of orifice diameter per psi differential) up to 35 psi close off differential pressure and ANSI Class IV seat leakage (maximum 0.01% of full open valve capacity) above 35 psi with appropriate actuator. High temperature valves must meet ANSI Class III seat leakage (maximum 0.1% of full open valve capacity).

3) The valve must be able to operate with a full-open operating differential of no less than 87 psi.

4) Flow Characteristics: Modified equal percentage characteristics for standard duty water applications and modified linear for heavy duty and high temperature steam applications with gradual opening for light loads.

5) Sizing:

a) Pressure drop across steam valve at a maximum flow of 80 percent of inlet pressure up to 15 psig and 42% of absolute (gage pressure + 14.7) inlet pressure above 15 psig inlet.

b) 100 psi saturated steam maximum inlet pressure for heavy duty bronze body globe valves ½"…2".

c) 150 psi saturated steam maximum inlet pressure for high temperature bronze body globe valves ½"…2".

d) 35 psi saturated steam maximum inlet pressure for standard duty bronze body globe valves ½"…2".

6) Certifications for All Models: Pressure Equipment Directive (PED 97/23/EC), RoHS (Restriction of Hazardous Substances) and REACH (Regulation, Evaluation, Authorization, and Restriction of Chemicals).

7) Basis of Design: Schneider Electric VB-7000 valves, or approved equal.

2. 2-½"…6" Steam Service Designed Globe Valves

a. Bodies: Shall be American Factory fabricated with ASTM A 126 Class B cast iron body material with the pressure class within the maximum pressure and temperature rating of the piping system. (125 body rating with not less than 200 psig at 150°F, decreasing to 169 psig at 281F per ANSA B16.1).

b. Serviceability: 2-Way valve operators, stem and plug assemblies and spring-loaded PTFE/EPDM valve stem packing cartridges must be removable for future replacement to restore the valves back to their original condition.

c. Construction: Material grades must meet the fluid temperature and pressure requirement temperatures of 20°F …281°F to assure reliability throughout all application temperature ranges.

d. Packings: Shall be cartridges suitable for replacement as units withstanding the full operating temperature ranges, including daily and seasonal fluctuations of water, 60% glycol and steam fluids.

e. Characteristics
   1) Rangeability: Two way,100:1 and greater for stable control under light load.
   2) Shutoff, 2-Way: Leakage allowed: ANSI Class IV (0.01% of max flow)
   3) Flow curves: 2-Way modified equal percentage characteristic.

f. Sizing
   1) Steam, 2-Way: maximum pressure drop across the valve at a maximum flow of 80 percent of inlet pressure up to 15 psig. Above 15 psig inlet, 42% of absolute (gage pressure + 14.7) inlet pressure.

g. Certifications for All Models: Pressure Equipment Directive (PED 97/23/EC), RoHS (Restriction of Hazardous Substances) and REACH (Regulation, Evaluation, Authorization, and Restriction of Chemicals.

h. Basis of Design: Schneider Electric VB-8000 and VB-9000 valves, or approved equal.

R. Control Valve Actuators

1. ½" to ¾" Ball Valve Actuators
   a. Size for torque required for valve close-off pressure for system design.
   b. Coupling: Direct coupled to valve body without use of external devices/tools
   c. Auxiliary End Switch (optional) to be SPST 24 Vac/Vdc,101 mA to 5 mA maximum on selected two-position models.
   d. Controller Signal Two-position, Floating or Proportional (0…5 Vdc, 0…10 Vdc, 5…10 Vdc, or 4…20 mA dc). Design allows for change via DIP switches without removal of cover.
   e. Manual operating lever and position indicator must be standard.
   f. Power Requirements: 24 Vac for floating, proportional, and 110…230 Vac for two position multi-voltage types
   g. Actuators must be available with either Spring Return (SR) or Non-Spring Return (NSR) models.
   h. Operating Temperature Limit Floating is to be 32…140°F (0…60°C) Proportional 32…140°F (0…60°C) Two-Position 32…169°F (0…76°C)
   i. Wiring (depending on model) Removable Terminal Block, 10 ft. (3.05 m) Plenum Cable, 18 in. (45 cm) Appliance Wire
   j. Locations must be rated NEMA 2, IEC IP31. (Indoor Use Only.) Actuators with terminal block or plenum cable leads are plenum rated per UL file number E9429.
   k. Agency Listings: ISO 9001, cULus, and CE.
   l. Basis of Design: Schneider Electric VBB/VBS, or approved equal.
2. ½" to 3" 2-way and ½" to 2" 3-way Ball Valves Actuators
   a. Size for torque required for valve close-off pressure for system design.
   b. Actuators are to be available in spring return (SR) and non-spring return (NSR) models. Spring Return (SR) actuators are to provide a choice to return direction.
   c. Actuators are to be available in models for two-position, floating and proportional control.
   d. All actuator models are to be equipped with pigtail leads, manual override, and auxiliary switch(es)
   e. Operating temperatures' Floating Non-Spring Return (NSR) with 33 lb.-in. of torque must be -25 to 130 °F (-32 to 55°C). All other actuators are to -22 to 140 °F (-30 to 60 °C)
   f. Actuators must be NEMA 2 rated.
   g. Agency Listings: ISO 9001, cULus, and CE.
   h. Basis of Design: Schneider Electric VB-2000, or approved equal.
3. ½" to 2" Bronze, Linear Globe Valve Actuators/67 or 78 lbs. force

a. Actuator must have bi-color LED status indication for motion indication, auto calibration and alarm notification.

b. When the actuator is properly mounted must have a minimum of a NEMA 2 (IP53) rating.

c. Actuators are to be non-spring return.

d. Actuators are to be floating (used for two-position) or proportional models.

e. Proportional models will have optional models with a position output signal with field selectable 2…10 Vdc and 0…10 Vdc input signals and selectable input signal direct or reverse acting.

f. Actuator must have auto calibration which provides precise control by scaling the input signal to match the exact travel of the valve stem

g. Actuators must come in models with Pulse Width Modulated (PWM) with field selectable 0.59 to 2.93 sec and 0.1 to 25.5 sec input signal ranges with a position output signal

h. Actuators must have manual override with automatic release.

i. Models with position feedback output signal include field selectable 2…10 Vdc or 0…5 Vdc output signal

j. Removable wiring screw terminal with ½" conduit opening.

k. Actuator operating temperature ranges:

1) When controlling fluid up to 266°F (130°C) = ambient air temperature is to be 23…131°F (-5…55°C)

2) Fluid up to 281°F (138°C) = 23…127°F (-5…53°C)

3) Fluid up to 340°F (171°C) = 23…115°F (-5…46°C)

4) Fluid up to 400°F (204°C) = 23…102°F (-5…39°C)

l. Actuator agency Listings: cUL-us LISTED mark, NEMA 2, NEC class 2 FCC part-15 class B, Canadian ICES-003, ESA registered, Plenum rated per UL 20430

m. Basis of Design: Schneider Electric MG350V, or approved equal.

4. ½" to 2" Bronze, Linear Globe Valve Actuators/105 lbs. force

a. Actuators must have Two- Position, Floating, and Proportional models.

b. Proportional models will a controller input signal of either a 0…10 Vdc, 2…10 Vdc, 4…20 mAdc, 0…3 Vdc, or 6…9 Vdc. Control function direct/reverse action is switch selectable on most models.

c. Actuator force is to be 105 lb. (467 newton) with ½" (13 mm) nominal linear stroke

d. Power requirements 24 Vac, 120 Vac or 230 Vac depending on model.

e. Actuator housings rated for up to NEMA 2/ IP54.

f. Actuator is to have overload protection throughout stroke.

g. Actuator Operating temperature -22…140°F (-30…60°C) up to a maximum valve fluid temperature of 366°F (186°C).

h. Actuator must automatically set input span to match valve travel.

i. Actuator must have manual override to allow positioning of valve and preload.

j. Actuator is to be spring return.

k. Actuator is to mount directly to valves without separate linkage.

l. Actuator agency Listings: UL 873, CUL: UL

m. Basis of Design: Schneider Electric SmartX Mx51-7103, or approved equal

5. ½" to 2" Bronze, Linear Globe Valve Actuators/220 lbs. force

a. Actuators must have Two- Position for a SPST controller, Floating for a SPST controller, and Proportional models will a controller input signal of either a 0…10 Vdc, 2…10 Vdc, 4…20 mAdc, or 6…9 Vdc. Control function direct/reverse action is jumper selectable

b. Actuator is to be spring return.

c. Actuator will have 220 lb. force (979 newton) with ½" (13 mm) or 1" (25 mm) nominal linear stroke

d. Feedback on proportional model with 2…10 Vdc (max. 0.5 mA) output signal or to operate up to four like additional slave actuators.

e. Actuator operating temperature is 0…140°F (-18…60°C) up to a maximum valve fluid temperature of 281°F (138°C), 0…120°F (-18…49°C) up to a maximum valve fluid temperature of 300°F (149°C), 0…100°F (-18…38°C) up to a maximum valve fluid temperature of 340°F (171°C), 0…90°F (-18…32°C) up to a maximum valve fluid temperature of 366°F (186°C).

f. Actuator must automatically set input span to match valve travel

g. Actuator is to have a 24 Vac power supply on Two-position and Proportional models and 120 Vac on Two-position models.

h. Actuator housings rated for up to NEMA 2/ IP54

i. Actuator must have manual override to allow positioning of valve and preload

j. Actuator is to mount directly to vales without separate linkage.

k. Actuator agency Listings: UL 873, CUL: UL

l. Basis of Design: Schneider Electric SmartX Mx51-720x, or approved equal.

6. ½" to 2" Bronze, Linear Globe Valve Actuators with linkage SR

a. Actuators with 35, 60, 133, or 150 lb.-in of force depending on model.

b. Actuator housings rated for up to NEMA 2/ IP54 with a 150 lb.-in. rated a NEMA 4.

c. Actuators are to be spring return.

d. Actuators are to have Two-position, Floating and Proportional models.

e. Actuators must have overload protection throughout rotation.

f. Actuator have an optional built-in auxiliary switch to provide for interfacing or signaling on selected models.

g. Actuator agency listings: UL-873, C22-2 No.24-83, CUL0

h. Basis of Design: Schneider Electric SmartX, or approved equal.

7. ½" to 2" Bronze Body, Linear Globe Valve Actuators with linkage SR & NSR

a. Actuators are to be either floating SPDT control or proportional control 0…10, 2…10 Vdc or 4…20 mA with a 500-ohm resistor included.

b. Actuators are to be direct/reverse with selectable DIP switches.

c. Actuators are to have 90 lb. (400N), 180 lb. (800N), or 337 lb. (1500N) of force on Non-Spring Return (NSR) 157 lb. of force on the Spring Return model. Note: Not every actuator is for every valve.

d. Actuators are to be powered with 24 Vac or 24 Vdc.

e. All Non-Spring Return (NSR) actuators are to be NEMA 2, vertical mount only. Spring Return (SR) actuators are to have NEMA 4 models.

f. Actuators must have manual override to allow positioning of the valve.

g. Actuators must have selectable valve sequencing and flow curves of either equal percentage or linear.

h. Actuators must have feedback.

i. Actuators must have internal torque protection throughout stroke.

j. Actuator operating temperature is 14…122°F (-10…50°C) for chilled water applications, 14…113°F (-10…45°C) up to a maximum valve fluid temperature of 281°F (138°C), 14…107°F (-10…42°C) up to a maximum valve fluid temperature of 300°F (149°C), 14…100°F (-10…38°C) up to a maximum valve fluid temperature of 340°F (171°C), 14…90°F (-10…32°C) up to a maximum valve fluid temperature of 366°F (186°C).

k. Actuator agency listings (North America) UL873, cULus, RCM, CE

l. Basis of Design: Schneider Electric Forta M400A-VB, M800A-VB, M900A and M1500x-VB screw mounted on Venta VB7000s, or approved equal.

8. 2 ½" to 6" Cast Iron Flanged Globe Valve Linear Actuators with linkage

a. Actuators are to be either floating SPDT control or proportional control 0…10, 2…10 Vdc or 4…20 mA with a 500-ohm resistor included.

b. Actuators are to direct/reverse acting with selectable DIP switch.

c. Actuators are to have 180 lb. (800N) or 337 lb. (1500N) of force.

d. Actuators will need a 24 Vac or Vdc power supply.

e. Actuators are to be rated NEMA 2, vertical mount only.

f. Actuators must have manual override to allow positioning of the valve.

g. Actuators must have selectable valve sequencing and flow curves of either equal percentage to linear. A 2…10 Vac feedback.

h. Actuators must have Internal torque protection throughout stroke.

i. Actuator operating temperature is 14…122°F (-10…50°C) for chilled water applications, 14…113°F (-10…45°C) up to a maximum valve fluid temperature of 281°F (138°C), 14…107°F (-10…42°C) up to a maximum valve fluid temperature of 300°F (149°C).

j. Actuator agency listings (North America) UL873, cULus, RCM, CE

k. Basis of Design: Schneider Electric Forta M800A and M1500A, or approved equal.

9. 2-½" to 6" Cast Iron Flanged Globe Valve Actuators/220 lbs. force.

a. Actuators must have Two- Position for a SPST controller, Floating for a SPST controller, and Proportional models will a controller input signal of either a 0…10 Vdc, 2…10 Vdc, 4…20 mAdc, or 6…9 Vdc. Control function direct/reverse action is jumper selectable.

b. Actuator is to be spring return.

c. Actuator will have 220 lb. force (979 newton) with ½" (13 mm) or 1" (25 mm) nominal linear stroke.

d. Feedback on proportional model with 2…10 Vdc (max. 0.5 mA) output signal or to operate up to four like additional slave actuators.

e. Actuator must automatically set input span to match valve travel.

f. Actuator Operating temperature 0…140°F (-18…60°C) up to a maximum valve fluid temperature of 300°F (149°C).

g. Actuator is to have a 24 Vac power supply on Two-position and Proportional models and 120 Vac on Two-position models.

h. Actuator housings rated for up to NEMA 2/IP54.

i. Actuator must have manual override to allow positioning of valve and preload.

j. Actuator is to mount directly to vales without separate linkage.

k. Actuator agency Listings: UL 873, CUL: UL.

l. Basis of Design: Schneider Electric SmartX Mx61-720x, or approved equal.

10. 2-½" to 6" Cast Iron Flanged Globe Valve Actuators with linkage SR.

a. Actuators with 60, 133, or 150 lb.-in of force depending on model.

b. Actuator housings rated for up to NEMA 2/ IP54 with a 150 lb.-in. rated a NEMA 4.

c. Actuators are to be spring return.

d. Actuators are to have Two-position, Floating and Proportional models.

e. Actuators must have overload protection throughout rotation.

f. Actuator have an optional built-in auxiliary switch to provide for interfacing or signaling on selected models.

g. Actuator agency listings: UL-873, C22-2 No.24-83, CUL0.

h. Basis of Design: Schneider Electric SmartX, or approved equal.

11. 2” to 18” 2-Way and 2” to 16” 3-Way Linear Butterfly Valve Actuator with linkage NSR
    a. The butterfly valve actuators are to be Non-Spring Return (NSR) two-position and proportional taking 0…10 Vdc or 4…20 mA models. All Actuators are to be NEMA 4, manual override (hand wheel) two auxiliary switches, and built-in heater.
    b. Actuator close-offs and CVs must be appropriate for the valve size in a typical HVAC application.
    c. Actuators must be available in 24 Vac and 120 Vac models.
    d. Actuators must have Internal wiring isolation for parallel wiring multiple units that eliminates the risk of feedback from one actuator to another.
    e. Proportional models must have feedback of 0…10 Vdc or 4…20 mA.
    f. Actuator operating temperature shall be -40…150°F (-40…60°C).
    g. Actuator agency listings (North America) UL, CSA and CE
    h. Basis of Design: Schneider Electric S70, or approved equal.
12. 2” to 4” 2-Way and 3-Way Butterfly Valve Actuators SR
    a. The butterfly valve actuators are to be Spring Return (SR) two-position and proportional taking 2…10 Vdc or 4…20 mA models. All Actuators are to be NEMA 2.
    b. Actuator close-offs and CVs must be appropriate for the valve size in a typical HVAC application.
    c. Actuators must be available in 24 Vac models.
    d. Actuators shall have two SPDT auxiliary switch models.
    e. Actuators must have [Internal wiring isolation for parallel wiring multiple units that eliminates the risk of feedback from one actuator to another.
    f. Proportional models must have feedback of 2…10 Vdc or 4…20 mA.
    g. Actuator operating temperature shall be -22…140°F (-12…60°C).
    h. Actuator agency listings (North America) UL, CSA and CE
    i. Basis of Design: Schneider Electric SmartX Mx-41-7153, or approved equal.
13. 2” to 6” 2-Way and 3-Way Butterfly Valve Actuators NSR
    a. The butterfly valve actuators are to be Non-Spring Return (NSR) two-position and proportional taking 0…10 Vdc or 4…20 mA models. All Actuators are to be NEMA 2.
    b. Actuator close-offs and CVs must be appropriate for the valve size in a typical HVAC application.
    c. Actuators must be available in 24 Vac models.
    d. Actuators shall have two SPDT auxiliary switch models.
    e. Actuators must have [Internal wiring isolation for parallel wiring multiple units that eliminates the risk of feedback from one actuator to another.
    f. Proportional models must have feedback of 2…10 Vdc or 4…20 mA.
    g. Actuator operating temperature shall be -4…122°F (-2…50°C).
    h. Actuator agency listings (North America) UL, CSA and CE
    i. Basis of Design: Schneider Electric SmartX NR-22xx-5xx, or approved equal.

S. Dampers
1. Automatic dampers, furnished by the Building Automation Contractor shall be single or multiple blade as required. Dampers are to be installed by the HVAC Contractor under the supervision of the BAS system supplier. All blank-off plates and conversions necessary to install smaller than duct size dampers are the responsibility of the Sheet Metal Contractor.
2. Damper frames are to be constructed of 13 gauge galvanized sheet steel mechanically joined with linkage concealed in the side channel to eliminate noise as friction. Compressible spring stainless steel side seals and acetyl or bronze bearings shall also be provided.
3. Damper blade width shall not exceed eight inches. Seals and 3/8 inch square steel zinc plated pins are required. Blade rotation is to be parallel or opposed as shown on the schedules.

4. For high performance applications, control dampers will meet or exceed the UL Class I leakage rating.
5. Control and smoke dampers shall be Ruskin, or approved equal.
6. Provide opposed blade dampers for modulating applications and parallel blade for two position control.

T. Damper Actuators
1. Direct-coupled type non-hydraulic designed for minimum 100,000 full-stroke cycles at rated torque.
2. Direct-coupled damper actuators must have a five-year warrantee.
3. Size for torque required for damper seal at maximum design conditions and valve close-off pressure for system design.
4. Direct-coupled damper actuators should accommodate 3/8", ½" 1.05" round or 3/8"…½" and ¾" square damper shafts.
5. Actuator operating temperature minimum requirements: 44, 88 and 133 lb.-in. are –25°F…130°F (–32°C…55°C). The 30, 35, 60, 150 and 300 lb.-in. are -25°…140°F (-30°C… 60 °C). The 270 are -22°…122°F (-30°C… 50 °C).
6. Overload protected electronically throughout rotation except for selected Floating actuators the have a mechanical clutch.
7. Spring Return Actuators: Mechanical fail safe shall incorporate a spring-return mechanism.
8. Non-Spring Return Actuators shall stay in the position last commended by the controller with an external manual gear release to allow positioning when not powered.
9. Power Requirements: 24Vac/dc [120Vac][230Vac]
10. Proportional Actuators controller input range from 0…10 Vdc, 2…10 Vdc or 4…20 mA models.
11. Housing: Minimum requirement NEMA type 2 with NEMA type 4 available for applications requiring higher ratings.
12. Actuators with a microprocessor should not be able to be modified by an outside source (cracked or hacked).
13. Actuators of 133 and 270 lb.-in. of torque or more should be able to be tandem mount or "gang" mount.
14. Agency Listings: ISO 9001, cULus, CE and CSA
15. Basis of Design: Schneider Electric SmartX Actuators, or approved equal.

U. Smoke Detectors
1. Air duct smoke detectors shall be by Air Products & Controls or approved equal. The detectors shall operate at air velocities from 300 feet per minute to 4000 feet per minute.
2. The smoke detector shall utilize a photoelectric detector head.
3. The housing shall permit mechanical installation without removal of the detector cover.
4. The detectors shall be listed by Underwriters Laboratories and meet the requirements of UL 268A.

V. Airflow Measuring Stations
1. Provide a thermal anemometer using instrument grade self-heated thermistor sensors with thermistor temperature sensors.
2. The flow station shall operate over a range of 0 to 5,000 feet/min with an accuracy of +/- 2% over 500 feet/min and +/- 10 ft/min for reading less than 500 feet/min.

2.8 ELECTRICAL POWER MEASUREMENT

A. Electrical Power Monitors, Single Point (Easy Install):
1. Acceptable Manufacturer: Schneider Electric, Veris Industries.
2. General: Consist of three split-core CTs, factory calibrated as a system, hinged at both axes with the electronics embedded inside the master CT. The transducer shall measure true (rms.RMS)

power demand real power (kW) consumption (kWh). Conform to ANSI C12.1 metering accuracy standards.

3. Voltage Input: Load capacity as shown on drawings. 208-480 VAC, 60 Hz
4. Maximum Current Input: Up to 2400A
5. Performance:
   a. Accuracy: +/- 1% system from 10% to 100% of the rated current of the CT's
   b. Operating Temperature Range: 32-140°F, 122°F for 2400A.
6. Output: 4 to 20 mA, Pulse. or Modbus RTU
7. Ratings:
   a. Agency: UL508 or equivalent
   b. Transducer internally isolated to 2000 VAC.
   c. Case isolation shall be 600 VAC.
8. Basis of Design: Similar to Enercept H80xx Series, E23 Series
9. Accessories: Current transducers (CTs): split-core (E681/H681/U004) series, solid-core (E682/U004 series) and Rogowski Coils – rope style (E683 series); Communications gateways: Modbus to Ethernet (EGX150)

B. Electrical Power Monitors, Single Point (High Accuracy):
1. Acceptable Manufacturer: Schneider Electric, Veris Industries.
2. General: Revenue grade meter. Measures voltage, amperage, real power (kW), consumption (kWh), and reactive power (kVARar), and power factor (PF) per phase and total load for a single load. Factory calibrated as a system using split core CT's. Neutral voltage connection is required.
3. Voltage Input: 208-480 VAC, 60 Hz
4. Current Input: Up to 2400A
5. Performance:
   a. Accuracy: +/- 1% system from 2% to 100% of the rated current of the CT's
   b. Operating Temperature Range: 32-122°F
6. Output: Pulse, BACnet, Modbus RTU
7. Display: Backlit LCD
8. Enclosure: NEMA 1
9. Agency Rating: UL508 or equivalent
10. Basis of Design: Veris Industries H81xx00 series.
11. Accessories: Current transducers (CTs): split-core (E681/H681/U004) series, solid-core (E682/U004 series)

C. Electrical Power Monitors, Single Point (High Accuracy/Versatility):
1. Acceptable Manufacturer: Schneider Electric, Veris Industries.
2. General: Revenue grade meter. Measures voltage, amperage, real power (kW), consumption (kWh), reactive power (kVAR), apparent power (kVA) and power factor (PF) per phase and total load for a single load. Available with data logging , Bi-directional (4-quadrant) metering, and pulse contact accumulator inputs.
3. Voltage Input: 90-600 VAC, 50/60 Hz, 125-300 VDC
4. Current Input: 5A – 32,000A, selectable 1/3V or 1V CT inputs
5. Performance:
   a. Accuracy shall be +/- [0.2%][0.5%] revenue grade
   b. Operating Temperature Range: -22-158°F
6. Output shall be [Pulse][BACnet][Modbus RTU][LON][Modbus TCP][BACnet/IP][Modbus RTU/TCP][SNMP]
7. Display: Backlit LCD

8. Enclosure: NEMA 4x optional
9. Agency Rating: UL508, ANSI C12.20
10. Basis of Design: Veris E50 series, Veris E60 Series or Schneider Electric PM5000 Series
11. Accessories: Current transducers (CTs): split-core (E681/H681/U004) series, solid-core (E682/U004 series) and Rogowski Coils – rope style (E683 series)

D. Electrical Power Monitors, Multiple Point (92 loads, High Accuracy):
1. Acceptable Manufacturer: Schneider Electric, Veris Industries.
2. General: Revenue grade meter. Measures volts, amps, power and energy for each circuit. 1/4 amp to 200 amp monitoring. 4 configurable alarm threshold registers
3. Voltage Input: 90-277 VAC, 60 Hz
4. Current Input: 5A – 32,000A, 1/3V CT inputs
5. Performance:
a. Accuracy: +/- 0.5% meter (split core), +/- 1% system from 1/4-100A (solid core)
b. Operating Temperature Range: 32-140°F
6. Output: [BACnet][Modbus RTU][ModbusTCP][BACnet/IP][Modbus RTU/TCP][SNMP]
7. Agency Rating: UL508, ANSI C12.10, IEC Class 1
8. Basis of Design: Veris E3xxx series.

PART 3 - EXECUTION

3.1 GENERAL

A. In addition to the requirements specified herein, execution shall be in accordance with the requirements of Specification Section 23 00 00 and Drawings.

B. Examine equipment exterior and interior prior to installation. Report any damage and do not install any equipment that is structurally, moisture, or mildew damaged.

C. Verification of Conditions: Examine areas and conditions under which the work is to be installed, and notify the Contractor in writing, with a copy to the Owner and the Engineer, of any conditions detrimental to the proper and timely completion of the work. Do not proceed with the work until unsatisfactory conditions have been corrected.

D. Beginning of the work shall indicate acceptance of the areas and conditions as satisfactory by the Installer.

E. Install equipment in accordance with reviewed product data, final shop drawings, manufacturer’s written instructions and recommendations, and as indicated on the Drawings.

F. Provide final protection and maintain conditions in a manner acceptable to the manufacturer that shall help ensure that the equipment is without damage at time of Substantial Completion.

G. Access to Site
1. Unless notified otherwise, entrance to building is restricted. No one will be permitted to enter the building unless their names have been cleared with the Owner or the Owner’s Representative.

H. Code Compliance
1. All wiring shall be installed in accordance with all applicable electrical codes and will comply with equipment manufacturer's recommendations. Should any discrepancy be found between wiring specifications in Division 17 and Division 16, wiring requirements of Division 17 will prevail for work specified in Division 17.

I. Cleanup

1. At the completion of the work, all equipment pertinent to this contract shall be checked and thoroughly cleaned, and all other areas shall be cleaned around equipment provided under this contract.

3.2 SYSTEM ACCEPTANCE TESTING

A. All application software will be verified and compared against the sequences of operation.

B. Control loops will be exercised by inducing a setpoint shift of at least 10% and observing whether the system successfully returns the process variable to setpoint. Record all test results and attach to the Test Results Sheet.

C. Test each alarm in the system and validate that the system generates the appropriate alarm message, that the message appears at all prescribed destinations (workstations or printers), and that any other related actions occur as defined (i.e. graphic panels are invoked, reports are generated, etc.). Submit a Test Results Sheet to the owner.

D. Perform an operational test of each unique graphic display and report to verify that the item exists, that the appearance and content are correct, and that any special features work as intended. Submit a Test Results Sheet to the owner.

E. Perform an operational test of each third party interface that has been included as part of the automation system. Verify that all points are properly polled, that alarms have been configured, and that any associated graphics and reports have been completed. If the interface involves a file transfer over Ethernet, test any logic that controls the transmission of the file, and verify the content of the specified information.

3.3 INSTALLATION

A. Hardware Installation Practices for Wiring

1. All controllers are to be mounted vertically and per the manufacturer's installation documentation.
2. The 120VAC power wiring to each Ethernet or Remote Site controller shall be a dedicated run, with a separate breaker. Each run will include a separate hot, neutral and ground wire. The ground wire will terminate at the breaker panel ground. This circuit will not feed any other circuit or device.
3. A true earth ground must be available in the building. Do not use a corroded or galvanized pipe, or structural steel.
4. Wires are to be attached to the building proper at regular intervals such that wiring does not droop. Wires are not to be affixed to or supported by pipes, conduit, etc.
5. Conduit in finished areas will be concealed in ceiling cavity spaces, plenums, furred spaces and wall construction. Exception; metallic surface raceway may be used in finished areas on masonry walls. All surface raceway in finished areas must be color matched to the existing finish within the limitations of standard manufactured colors.
6. Conduit, in non-finished areas where possible, will be concealed in ceiling cavity spaces, plenums, furred spaces, and wall construction. Exposed conduit will run parallel to or at right angles to the building structure.
7. Wires are to be kept a minimum of three (3) inches from hot water, steam, or condensate piping.
8. Where sensor wires leave the conduit system, they are to be protected by a plastic insert.
9. Wire will not be allowed to run across telephone equipment areas.
10. Provide fire caulking at all rated penetrations.

B. Installation Practices for Field Devices

1. Well-mounted sensors will include thermal conducting compound within the well to insure good heat transfer to the sensor.

2. Actuators will be firmly mounted to give positive movement and linkage will be adjusted to give smooth continuous movement throughout 100 percent of the stroke.
3. Relay outputs will include transient suppression across all coils. Suppression devices shall limit transients to 150% of the rated coil voltage.
4. Water line mounted sensors shall be removable without shutting down the system in which they are installed.
5. For duct static pressure sensors, the high pressure port shall be connected to a metal static pressure probe inserted into the duct pointing upstream. The low pressure port shall be left open to the plenum area at the point that the high pressure port is tapped into the ductwork.
6. For building static pressure sensors, the high pressure port shall be inserted into the space via a metal tube. Pipe the low pressure port to the outside of the building.

C. Wiring, Conduit, and Cable
1. All wire will be copper and meet the minimum wire size and insulation class listed below:
   a. Power - 12 Gauge - 600 Volt
   b. Class One - 14 Gauge Std. - 600 Volt
   c. Class Two - 18 Gauge Std. - 300 Volt
   d. Class Three - 18 Gauge Std. - 300 Volt
   e. Communications - Per Mfr.
2. Power and Class One wiring may be run in the same conduit. Class Two and Three wiring and communications wiring may be run in the same conduit.
3. Where different wiring classes terminate within the same enclosure, maintain clearances and install barriers per the National Electric Code.
4. Where wiring is required to be installed in conduit, EMT shall be used. Conduit shall be minimum 1/2 inch galvanized EMT. Set screw fittings are acceptable for dry interior locations. Watertight compression fittings shall be used for exterior locations and interior locations subject to moisture. Provide conduit seal-off fitting where exterior conduits enter the building or between areas of high temperature/moisture differential.
5. Flexible metallic conduit (max. 3 feet) shall be used for connections to motors, actuators, controllers, and sensors mounted on vibration producing equipment. Liquid-tight flexible conduit shall be use in exterior locations and interior locations subject to moisture.
6. Junction boxes shall be provided at all cable splices, equipment termination, and transitions from EMT to flexible conduit. Interior dry location J-boxes shall be galvanized pressed steel, nominal four-inch square with blank cover. Exterior and damp location JH-boxes shall be cast alloy FS boxes with threaded hubs and gasketed covers.
7. Where the space above the ceiling is a supply or return air plenum, the wiring shall be plenum rated. Teflon wiring can be run without conduit above suspended ceilings. EXCEPTION: Any wire run in suspended ceilings that is used to control outside air dampers or to connect the system to the fire management system shall be in conduit.
8. Fiber optic cable shall include the following sizes; 50/125, 62.5/125 or 100/140.
9. Only glass fiber is acceptable, no plastic.
10. Fiber optic cable shall only be installed and terminated by an experienced contractor. The BAS system supplier shall submit to the Engineer the name of the intended contractor of the fiber optic cable with his submittal documents.

D. Enclosures
1. For all I/O requiring field interface devices, these devices where practical will be mounted in a field interface panel (FIP). The Contractor shall provide an enclosure which protects the device(s) from dust, moisture, conceals integral wiring and moving parts.
2. FIPs shall contain power supplies for sensors, interface relays and contactors, and safety circuits.

3. The FIP enclosure shall be of steel construction with baked enamel finish; NEMA 1 rated with a hinged door and keyed lock. The enclosure will be sized for twenty percent spare mounting space. All locks will be keyed identically.
4. All wiring to and from the FIP will be to screw type terminals. Analog or communications wiring may use the FIP as a raceway without terminating. The use of wire nuts within the FIP is prohibited.
5. All outside mounted enclosures shall meet the NEMA-4 rating.
6. The wiring within all enclosures shall be run in plastic track. Wiring within controllers shall be wrapped and secured.

E. Identification
1. Identify all control wires with labeling tape or sleeves using words, letters, or numbers that can be exactly cross-referenced with as-built drawings.
2. All field enclosures, other than controllers, shall be identified with a Bakelite nameplate. The lettering shall be in white against a black or blue background.
3. Junction box covers will be marked to indicate that they are a part of the BAS system.
4. All I/O field devices (except space sensors) that are not mounted within FIP's shall be identified with name plates.
5. All I/O field devices inside FIP's shall be labeled.

F. Location
1. The location of sensors is per mechanical and architectural drawings.
2. Space humidity or temperature sensors will be mounted away from machinery generating heat, direct light and diffuser air streams.
3. Outdoor air sensors will be mounted on the north building face directly in the outside air. Install these sensors such that the effects of heat radiated from the building or sunlight is minimized.
4. Field enclosures shall be located immediately adjacent to the controller panel(s) to which it is being interfaced.

G. Software Installation
1. The Contractor shall provide all labor necessary to install, initialize, start-up and debug all system software as described in this section. This includes any operating system software or other third party software necessary for successful operation of the system.

3.4 TRAINING

A. The BAS system supplier shall provide both on-site and classroom training to the Owner’s representative and maintenance personnel per the following description:

B. On-site training shall consist of a minimum of (24) hours of hands-on instruction geared at the operation and maintenance of the systems. The curriculum shall include
1. System Overview
2. System Software and Operation
3. System access
4. Software features overview
5. Changing setpoints and other attributes
6. Scheduling
7. Editing programmed variables
8. Displaying color graphics
9. Running reports
10. Workstation maintenance
11. Viewing application programming

12. Operational sequences including start-up, shutdown, adjusting and balancing.
13. Equipment maintenance

3.5 CONTROL SYSTEM SWITCH-OVER

A. Demolition of the existing control system will occur after the new temperature control system is in place including new sensors and new field interface devices.

B. Switch-over from the existing control system to the new system will be fully coordinated with the Owner. A representative of the Owner will be on site during switch-over.

C. The Contractor shall minimize control system downtime during switch-over. Sufficient installation mechanics will be on site so that the entire switch-over can be accomplished in a reasonable time frame.

3.6 DATABASE CONFIGURATION.

A. The Contractor will provide all labor to configure those portions of the database that are required by the points list and sequence of operation.

3.7 COLOR GRAPHIC DISPLAYS.

A. Unless otherwise directed by the owner, the Contractor will provide color graphic displays as depicted in the mechanical drawings for each system and floor plan. For each system or floor plan, the display shall contain the associated points identified in the point list and allow for setpoint changes as required by the owner.

3.8 REPORTS.

A. The Contractor will configure a minimum of 4 reports for the owner. These reports shall, at a minimum, be able to provide:
1. Trend comparison data
2. Alarm status and prevalence information
3. Energy Consumption data
4. System user data

3.9 POINT TO POINT CHECKOUT.

A. Each I/O device (both field mounted as well as those located in FIPs) shall be inspected and verified for proper installation and functionality. A checkout sheet itemizing each device shall be filled out, dated and approved by the Project Manager for submission to the owner or owner's representative.

B. In case of wireless devices, the signal strength recorded during checkout shall be reported.

3.10 CONTROLLER AND WORKSTATION CHECKOUT.

A. A field checkout of all controllers and front end equipment (computers, printers, modems, etc.) shall be conducted to verify proper operation of both hardware and software. A checkout sheet itemizing each device and a description of the associated tests shall be prepared and submitted to the owner or owner's representative by the completion of the project.

3.11 DOCUMENTATION

A. As built software documentation will include the following:
1. Descriptive point lists
2. Application program listing

3. Application programs with comments.
4. Printouts of all reports.
5. Alarm list.
6. Printouts of all graphics
7. Commissioning and System Startup
8. An electronic copy of all databases, configuration files, or any type of files created specifically for each system.

END OF SECTION 230923

SECTION 230993 – HVAC SEQUENCE OF OPERATIONS

A. Haddonfield Tatem Elementary School

Packaged RTU (Gas/DX):

The Building Automation System (BAS) shall send the RTU BACnet controller Occupied Bypass, Morning Warmup/
Pre-Cool, Occupied/Unoccupied and Heat/Cool modes. The BAS shall also send the discharge air temperature setpoint and the duct static pressure setpoint. If a BAS is not present, or communication is lost with the BAS the controller shall operate using default modes and setpoints.
Occupied:
During occupied periods, the supply fan shall run continuously and the mixed air dampers shall open to maintain minimum ventilation requirements.
Upon a call for DX cooling, the unit controller shall enable the first fixed speed compressor. If the fixed speed compressor cannot satisfy the load conditions, the unit controller shall start the next fixed speed compressor in sequence to add to the total unit cooling load percentage. This process shall repeat until all of the fixed speed compressors have been started or until the active space temperature setpoint is satisfied. If economizing is enabled, the outdoor air or mixed air dampers shall modulate to maintain the space temperature setpoint and the relief air damper shall track the mixed air dampers. If the discharge air temperature sensor fails, the DX cooling shall be disabled, the gas heat shall be disabled, and an alarm shall annunciate at the BAS.
Unoccupied:
When the space temperature is below the unoccupied heating setpoint of 60.0 deg. F (adj.) the supply fan shall be commanded on, the outside air damper shall remain closed and the gas heat shall be enabled. When the space temperature rises above the unoccupied heating setpoint of 60.0 deg. F (adj.) plus, the unoccupied differential of 4.0 deg. F (adj.) the supply fan shall stop and the gas heat shall be disabled. When the space temperature is above the unoccupied cooling setpoint of 85.0 deg. F (adj.) the supply fan shall be commanded on; the outside air damper shall open if economizing is enabled and remain closed if economizing is disabled and the DX cooling shall be enabled. When the space temperature falls below the unoccupied cooling setpoint of 85.0 deg. F minus the Unoccupied differential of 4.0 deg. F (adj.) the supply fan shall stop, the DX cooling shall be disabled and the outside air damper shall close.
Optimal Start:
The BAS shall monitor the scheduled occupied time, occupied space setpoints and space temperature to calculate when the optimal start occurs.
Optimal Stop:
The BAS shall monitor the scheduled unoccupied time, occupied setpoints and space temperature to calculate when the optimal stop occurs. When the optimal stop mode is active the unit controller shall maintain the space temperature to the space temperature offset setpoint. Outside air damper shall remain enabled to provide minimum ventilation.
Morning Warm-Up Mode:
During optimal start, if the average space temperature is below the occupied heating setpoint a morning warm-up mode shall be activated. When morning warm-up is initiated the unit shall enable the heating and fan(s). The outside air damper shall remain closed. When the space temperature reaches the occupied heating setpoint (adj.), the unit shall transition to the occupied mode.
Pre-Cool Mode:
During optimal start, if the average space temperature is above the occupied cooling setpoint, pre-cool mode shall be activated. When pre-cool is initiated the unit shall enable the fan and cooling or economizer. The outside air damper shall remain closed, unless economizing. When the space temperature reaches occupied cooling setpoint (adj.), the unit shall transition to the occupied mode.
Occupied Bypass:
The BAS shall monitor the status of the ON and CANCEL buttons of the space temperature sensors. When an occupied bypass request is received from a space sensor, the unit shall transition from its current occupancy mode to occupied bypass mode and the unit shall maintain the space temperature to the occupied setpoints (adj.).

Heat/Cool Mode:
COOLING: The unit controller shall use the discharge air temperature sensor and discharge air temperature cooling setpoint to determine when to initiate requests for cooling. Discharge air setpoint shall be maintained by controlling the cooling as required.
HEATING: The unit controller shall use the discharge air temperature sensor and discharge air temperature heating setpoint to determine when to initiate requests for heating. Discharge air setpoint shall be maintained by controlling the heating as required. During Unoccupied Heating or Morning Warm-Up Mode, the unit heat request shall be communicated to the system VAVs prior to commencing heating operation to allow VAV units to open. The variable frequency drive shall be commanded to 100% and the heat shall be staged on and off to satisfy the zone temperature setpoint.
Discharge Air Temperature Reset Control:
The discharge air temperature setpoint shall be reset to the optimal setpoint communicated by the BAS. The BAS shall reset the discharge air temperature setpoint based on the current outside air temperature, but shall override this reset function and return the discharge air temperature setpoint to 55.0 deg. F (adj.) if more than two (adj.) zones begin to overheat. Also, the BAS shall override this reset function whenever outdoor dew point is higher than 60.0 deg. F (adj.) or indoor humidity is higher than 60% RH (adj.). If the discharge air temperature drops below the minimum limit, a low temperature alarm shall annunciate and the unit shall shut down. If the discharge air temperature rises above the maximum limit, a high temperature alarm shall annunciate.
Economizer:
ENABLE (Comparative Enthalpy): Outside air (OA) enthalpy shall be compared with Return air (RA) enthalpy point. The economizer shall enable when OA enthalpy is less than RA enthalpy - 2.0 BTU/LB. The economizer shall disable when OA enthalpy is greater than RA enthalpy.
OPERATION: The supply air sensor shall measure the dry bulb temperature of the air leaving the evaporator coil while economizing. When economizing is enabled and the unit is operating in the cooling mode, the economizer damper shall be modulated between its minimum position and 100% to maintain the discharge air temperature setpoint. The economizer damper shall modulate toward minimum position in the event the discharge air temperature falls below the discharge low limit temperature setpoint. Compressors shall be delayed from operating until the economizer has opened to 100%.
Demand Control Ventilation (DCV):
If the return air CO_2 level is greater than or equal to the Design Minimum CO_2 Setpoint, the outdoor air damper shall open to the Design Minimum Outdoor Air Damper Setpoint. If there is a call for economizer cooling, the damper may be opened further to satisfy the cooling request.
If the return air CO_2 level is less than or equal to the DCV Minimum CO_2 Setpoint, the outdoor air damper shall close to the DCV Minimum Outdoor Air Damper Setpoint. If there is a call for economizer cooling, the damper may be opened further to satisfy the cooling request.
If the return air CO_2 level is greater than the DCV Minimum CO_2 Setpoint and less than the Design Minimum CO_2 Setpoint, the outdoor air damper position shall be modulated proportionally to the space CO_2 level relative to a target position between the DCV Minimum CO_2 Setpoint and the Design Minimum CO_2 Setpoint. If there is a call for economizer cooling, the damper may be opened further to satisfy the cooling request.
Supply Fan:
The supply fan shall be enabled while in the occupied mode and cycled on during the unoccupied mode.
Relief Air and Building Pressure Control:
The barometric relief dampers shall open with increased building pressure. As the building pressure increases, the pressure in the unit return section also increases, opening the dampers and relieving air.
Filter Status:
A differential pressure switch shall monitor the differential pressure across the filter(s) when the fan is running. If the switch closes during normal operation a dirty filter alarm shall annunciate at the BAS.
Condensate Overflow Shutdown:
The unit shall shut down in response to a signal from the condensate overflow sensor. The sensor shall be interlocked to the unit cooling controller for immediate shutdown of cooling.

Air Handling Unit Control:
The Building Automation System (BAS) shall send the controller Occupied Bypass, Morning Warmup/ Pre-Cool, Occupied/Unoccupied and Heat/Cool modes. The BAS shall also send the discharge air

temperature setpoint and the duct static pressure setpoint. If a BAS is not present, or communication is lost with the BAS the controller shall operate using default modes and setpoints.
Occupied:
During occupied periods, the supply fan shall run continuously and the mixed air dampers shall open to maintain minimum ventilation requirements. The unit controller shall control the supply fan speed to maintain the current supply duct static pressure setpoint (adj.).
BAS.
Unoccupied:
When the space temperature is below the unoccupied heating setpoint of 60.0 deg. F (adj.) the supply fan shall be commanded on, the outside air damper shall remain closed and the heating coil valve shall modulate, as needed, to meet the space setpoint. When the space temperature rises above the unoccupied heating setpoint of 60.0 deg. F (adj.) When the space temperature is above the unoccupied cooling setpoint of 85.0 deg. F (adj.) the
supply fan shall be commanded on; the outside air damper shall open if economizing is enabled and remain closed if economizing is disabled and the DX cooling shall be enabled.
Optimal Start:
The BAS shall monitor the scheduled occupied time, occupied space setpoints and space temperature to calculate when the optimal start occurs.
Optimal Stop:
The BAS shall monitor the scheduled unoccupied time, occupied setpoints and space temperature to calculate when the optimal stop occurs. When the optimal stop mode is active the unit controller shall maintain the space temperature to the space temperature offset setpoint. Outside air damper shall remain enabled to provide minimum ventilation.
Morning Warm-Up Mode:
During optimal start, if the average space temperature is below the occupied heating setpoint a morning warm-up mode shall be activated. When morning warm-up is initiated the unit shall enable the heating and fan(s). The outside air damper shall remain closed. When the space temperature reaches the occupied heating setpoint (adj.), the unit shall transition to the occupied mode.
Pre-Cool Mode:
During optimal start, if the average space temperature is above the occupied cooling setpoint, pre-cool mode shall be activated. When pre-cool is initiated the unit shall enable the fan and cooling or economizer. The outside air damper shall remain closed, unless economizing. When the space temperature reaches occupied cooling setpoint (adj.), the unit shall transition to the occupied mode.
Occupied Bypass:
The BAS shall monitor the status of the ON and CANCEL buttons of the space temperature sensors. When an occupied bypass request is received from a space sensor, the unit shall transition from its current occupancy mode to occupied bypass mode and the unit shall maintain the space temperature to the occupied setpoints (adj.).
Heating – In heating mode, when room space temperature falls below programmed occupied room temperature set point, the heating coil control valve will modulate to full open until room space temperature is satisfied.
Cooling – In cooling mode, when room space temperature rises above programmed occupied room temperature set point and economizer cooling is unavailable, the two-stage mechanical cooling and the condenser fan will be enabled until room space temperature is met. The controller will monitor the discharge air temperature and modulate the supply fan from minimum speed to maximum speed to maintain a discharge air temperature of 55°F (adjustable). Mechanical cooling will be disabled with outdoor temperatures below 55°F.

Discharge Air Temperature Reset Control:
The discharge air temperature setpoint shall be reset to the optimal setpoint communicated by the BAS. The BAS shall reset the discharge air temperature setpoint based on the current outside air temperature, but shall override this reset function and return the discharge air temperature setpoint to 55.0 deg. F (adj.) if more than two (adj.) zones begin to overheat. Also, the BAS shall override this reset function whenever outdoor dew point is higher than 60.0 deg. F (adj.) or indoor humidity is higher than 60% RH (adj.). If the discharge air temperature drops below the minimum limit, a low temperature alarm shall annunciate and the unit shall shut down. If the discharge air temperature rises above the maximum limit, a high temperature alarm shall annunciate.

Economizer:
ENABLE (Comparative Enthalpy): Outside air (OA) enthalpy shall be compared with Return air (RA) enthalpy point. The economizer shall enable when OA enthalpy is less than RA enthalpy - 2.0 BTU/LB. The economizer shall disable when OA enthalpy is greater than RA enthalpy.
OPERATION: The supply air sensor shall measure the dry bulb temperature of the air leaving the evaporator coil while economizing. When economizing is enabled and the unit is operating in the cooling mode, the economizer damper shall be modulated between its minimum position and 100% to maintain the discharge air temperature setpoint. The economizer damper shall modulate toward minimum position in the event the discharge air temperature falls below the discharge low limit temperature setpoint. Compressors shall be delayed from operating until the economizer has opened to 100%.
Demand Control Ventilation (DCV):
If the return air CO2 level is greater than or equal to the Design Minimum CO2 Setpoint, the outdoor air damper shall open to the Design Minimum Outdoor Air Damper Setpoint. If there is a call for economizer cooling, the damper may be opened further to satisfy the cooling request.
If the return air CO2 level is less than or equal to the DCV Minimum CO2 Setpoint, the outdoor air damper shall close to the DCV Minimum Outdoor Air Damper Setpoint. If there is a call for economizer cooling, the damper may be opened further to satisfy the cooling request.
If the return air CO2 level is greater than the DCV Minimum CO2 Setpoint and less than the Design Minimum CO2 Setpoint, the outdoor air damper position shall be modulated proportionally to the space CO2 level relative to a target position between the DCV Minimum CO2 Setpoint and the Design Minimum CO2 Setpoint. If there is a call for economizer cooling, the damper may be opened further to satisfy the cooling request.
Supply Fan:
The supply fan shall be enabled while in the occupied mode and cycled on during the unoccupied mode.
Filter Status:
A differential pressure switch shall monitor the differential pressure across the filter(s) when the fan is running. If the switch closes during normal operation a dirty filter alarm shall annunciate at the BAS.
Condensate Overflow Shutdown:
The unit shall shut down in response to a signal from the condensate overflow sensor. The sensor shall be interlocked to the unit cooling controller for immediate shutdown of cooling.

Unit Ventilator Control

The unit shall come equipped from the factory with its own control system that will interface seamlessly with the existing BAS system, via BACnet protocol. The system shall operate as follows:

Occupied
The occupied cycle of the unit will be controlled by the schedule within the control system and/ or the space occupancy sensor if available.
During the occupied cycle, the outdoor air damper will be enabled and open to a predetermined minimum position. When directed so by high carbon dioxide signals or by an economizer signal, the outdoor air damper will modulate open. For the purpose of standard operating ventilation 450cfm (typical), the condenser fan will also operate as a relief fan. The condenser/relief fan shall be modulated from 20% up to a percentage that ensures that the appropriate amount of relief air is expelled from the space.
The supply fan will operate continuously regardless of outdoor air requirements until unit is moved to the unoccupied state.
Heating – when room space temperature falls below programmed occupied room temperature set point, the primary heat (Heat pump, electric, or hydronic) will be enabled until room space temperature is met. Second stage primary (electric/heat pump) will also be supplied if required to meet room temperature set point (also additional stages or supplemental electric if applicable). If supplementary heat is modulated, the further the room space temperature moves off set point, the further the secondary heat will be modulated on (supplemental hydronic). For hydronic applications, if room space temperature is met, the primary heat will maintain at least a 65°F discharge air temperature.

Cooling – when room space temperature rises above programmed occupied room temperature set point and economizer cooling is unavailable, the two-stage mechanical cooling and the condenser fan will be enabled until room space temperature is met. The controller will monitor the discharge air temperature and modulate the supply fan from minimum speed to maximum speed to maintain a discharge air temperature of 55°F (adjustable). Mechanical cooling will be disabled with outdoor temperatures below 55°F.
Economizer – during a call for cooling, and when the outdoor-to-indoor air temperature (delta) is sufficient to cool the room space,
the outside air damper (OAD, or economizer damper), parallel to the wheel will modulate open to 100% return air damper modulating closed to achieve set point and the relief fan will be enabled to achieve set point. For the purposes of economization, the condenser fan will also operate as a relief fan. The relief fan shall be modulated from 20%, up to a percentage that does not exceed the current supply volume called for by the unit. Discharge air temperature shall be maintained at or above 50°F (mixed minimum temperature).
ERW Relief - ERW intake flow is guaranteed by a delta p across the intake side of the wheel. Utilize the return air damper vs. the supply fan current setting to create that static load. ERW exhaust flow is guaranteed by a delta p across the exhaust side of the wheel. We utilize the outdoor/condenser damper to create this static load.
The controls contractor is going to need to:
1. Set the supply fan to the correct cfm
2. Set the return air damper to achieve the correct pressure across the intake of the wheel (measured)
3. Repeat 1 and 2 multiple times for accuracy
4. Begin closing outdoor/condenser damper until you get the desired pressure across the exhaust portion of the wheel (measured)
If you have multiple supply settings and/or relief fan settings, you will have to do this for all situations.
Unoccupied
Unoccupied cycles will be determined by the schedule within the control system and/or when the space occupancy sensor (if available) does not see motion for a predetermined period.
During the unoccupied cycle, the energy recovery wheel will be disabled. The outdoor air and recovery dampers will be closed. The
relief/condensing fan will be disabled. The economizer damper will only be enabled during an economizer cycle (CO_2 if available will be disabled).
The supply fan will only operate as required during a call for heating or cooling (it will cycle).
Heating – when room space temperature falls below programmed unoccupied room temperature set point, the primary heat (Heat
pump, electric, or hydronic) will be enabled until room space temperature is met. The further the room space temperature moves off
set point, second stage primary (electric/heat pump)/modulated (hydronic) heat will also be supplied (also additional stages, supplemental electric/hydronic if applicable).
Cooling – when room space temperature rises above programmed unoccupied room temperature set point, the mechanical cooling,
and the condenser fans will be enabled until room space temperature is met.
Economizer - cycle will operate the same during the unoccupied cycle as when in the occupied cycle.
Preconditioning/Standby
Unit operates at occupied set points with ventilation disabled. Energy recovery wheel, outdoor air and recovery dampers, as well as
the relief/condensing fans, are all disabled.

Dehumidification – Hot Gas Reheat
The unit shall cycle into DH mode under two circumstances. If the unit is currently in cooling mode and the rh level is greater than the rh set point, then the unit will go into a continuation dehumidification process. This process holds the compressor on and engages the reheat valve to begin a DH cycle at the end of a cooling call. It is disabled when room rh drops below (rh set point – rh Δ). The second DH condition is when the room rh is (rh set point + rh Δ), the unit will engage the compressor and reheat valve to lower the rh to (rh set point – rh Δ). DH mode consists of stage two compressor, low speed fan and the hot gas reheat valve energized. If the space temp rises to (space set point + space set point Δ)

DH mode is disabled with the compressor still on to cool the room back to set point. After set point is reached, DH mode is enabled again with the compressor still running.

Condenser Fan Settings – Standard Condition

	Stage 1 @ 90°F	Stage 2 @ 90°F
2 Ton	50%	50%
3 Ton	60%	67%
4 Ton	70%	83%
5 Ton	80%	100%

System Protections

Temperature, electrical, & safety

A temperature disc (standard) or averaging bulb sensor (optional) will monitor the temperature leaving the hot water coil and if it falls below a fixed threshold of 37°F, the water valve will spring return open, the supply fan will be disabled, and the outdoor air damper will close until the temperature rises back above the minimum allowable water temperature.

ERW freeze protection is provided by ramping the relief fan to increase the amount of relief air leaving the wheel to keep it above the freezing threshold (22°F.)

If the low voltage door switch is open, all mechanical relays will be disabled effectively immobilizing all heating, cooling and fan
operations. All dampers will receive no signals and return to their default spring return positions.

The compressor will have cycle protection built into the control programming, not allowing the compressor to restart for any reason within five minutes of stopping.

A temperature disc/freeze-stat will monitor the temperature of the evaporator coil (located on the DX coil) and if it falls below the fixed 37°F setting, mechanical cooling will be disabled until the temperature rises back above 59°F.

Suggested Values

- Preconditioning time – 7:00am
- Occupied time – 8:30am
- Unoccupied with motion – 9:00am
- Unoccupied without motion – 4:30pm
- Occupied heat – 70°F, 21°C
- Unoccupied heat – 60°F, 16°C
- Occupied cool – 75°F, 24°C
- Unoccupied Cool – 79°F, 26°C

Components included with manufactured equipment

- Unit controller
- Room interface including room space temperature sensor
- Occupancy sensor (optional)
- CO_2 monitor
- Discharge air temperature sensor
- Mixed air temperature sensor
- Outdoor air temperature sensor
- Leaving air temperature sensor from ERW
- ERW Pressure Transducer
- Compressor relays
- 75VA control transformer
- Damper actuator
- ECM supply fan control board (receives a 0-10vdc signal from the controller and outputs a pulse width signal to the supply fan for full modulating control.

MAU/Kitchen Hood:

A. The BAS Contractor to provide all interlocking wiring for kitchen hood exhaust fan, makeup air unit and exhaust fans between DDC system and kitchen EMS control system. Refer to the approved food service cutsheets & wiring diagrams.

B. Coordinate all wiring with kitchen equipment supplier and EMS system provided with kitchen equipment.

C. Kitchen makeup unit and hood exhaust fan

1. Refer to the approved food service drawings and specifications for kitchen EMS system.
2. Upon activation of makeup air unit and exhaust fan from manual wall switch or automatic exhaust hood EMS system, the makeup air unit and exhaust fan shall energize. The kitchen EMS system shall modulate the speed of the makeup air unit and exhaust fan to maintain required air flow.
3. The makeup air unit shall be provided with a discharge air controller to maintain a minimum discharge air temperature at all times.
4. Makeup air unit shall be provided with space temperature override controls.
5. Monitor Make-up Air unit and exhaust operation (occ/unocc signals, fan status, temperatures) at the BAS system.

VRF System:
Building Automation System Interface:
The Building Automation System (BAS) will allow the user to monitor the status of Variable Refrigerant Flow (VRF) terminal units, outdoor units, and secondary VRF equipment, and modify control parameters of terminal units and secondary VRF equipment as necessary to maintain the desired space conditions. If communication between the VRF equipment and the BAS is lost, the VRF system will continue to operate using the current control parameters stored within the equipment to maintain the desired space conditions.
External Control Device:
In this specification the term ‘external control device’ is used to denote one or more user interface control devices that may be present in the system. The control devices that may be present are a Local Control device, VRF System Control device, or a Building Automation System. When more than one
external control device is present in the control system, the last command or configuration value received by the indoor unit governs indoor unit operation.
There may be other means to provide commands and configuration parameters to the VRF system, such as hardwired control inputs. However, these are not considered the typical system control use case and the specification does not address them as written.
Zone Temperature Setpoint Control:
Dual Setpoint. Two zone air temperature setpoints are present. When the terminal unit is in cooling mode, it will control the zone air temperature value to the Cooling Temperature Setpoint value. When the terminal unit is in a heating mode, it will control the zone air temperature value to the Heating Temperature Setpoint value.
On/Off Mode:
The terminal unit has two modes that drive the overall operation of the unit, On and Off mode.
On. The internal algorithm will control the unit to maintain the desired zone air temperature.
Off. The internal algorithm will NOT control the unit to maintain the desired zone air temperature. The algorithm will control components internal to the unit to minimize energy consumption and isolate it from VRF system refrigerant circuit. The zone air temperature sensor in use will be monitored to allow the Zone Air Temperature Value to be displayed at an External Control Device(s).
Operation Mode:
Operation mode is the primary control parameter of the indoor unit when it is in the On state. The operation mode command provided to the indoor unit from an eternal control device will determine the base HVAC control function the indoor unit is providing. Available modes of operation are Cool, Dry, Fan, Heat, Setback, and Auto. The VRF system will operate under its packaged controls to meet the desired choice of mode.

Energy Recovery Ventilation Unit (ERV) Control:

A. During the occupied mode, the ERV unit control will be interlocked with its respective AC unit. Once enabled, the ERV unit dampers will open and its fans will energize. If the ERV is equipped with a duct

heater, its internal controls shall maintain the desired heating coil discharge setpoint. The BAS system will monitor all points made available by the VRF manufacturer and present the unit's operation, setpoints & alarms at the BAS front end.

Exhaust Fan Control (EF):
The BAS shall enable all exhaust fans to start based on the occupied schedule. A current switch for each fan shall confirm fan status.

Fin Tube Radiation Control

Any time hot water is available, a space temperature sensor shall modulate, through the BAS, the Fin Tube Radiation (FTR) zone control valve to maintain the desired zone space temperature setpoint. The space setpoint shall be indexed to the day or night cycle based upon its respective zone signal.

In the occupied mode, when operating in conjunction with another HVAC unit in the zone (RTU or Unit Ventilator), the FTR heating shall be the first stage of heat. If the space setpoint is still not satisfied with the FTR valve fully modulated, the secondary heat shall then be enabled.

In the unoccupied mode, the space shall be maintained by the FTR heating only.

Cabinet Unit Heater Control

Provide a space temperature sensor for control of each unit heater. The sensor shall be controlled through the BAS and be indexed to the day or night cycle based upon its respective zone signal. Any time that hot water is available as indicated by the BAS, the sensor shall cycle the cabinet heater fan to maintain the day or night temperature set-point. Any time that the unit fan is energized, the two position hot water control valve shall open.

Hot Water Booster Pump Control:
The BAS shall enable the hot water booster pump to start whenever the building's boilers & main pumps are indexed to start and proven "on". A current switch shall confirm pump status and the BAS shall monitor the pump's VFD speed and status. If status is not proven or any VFD alarms exist, the BAS shall signal an alarm at the BAS workstation.

B. Haddonfield Hopkins Gym

Gymnasium Packaged RTU-G (Gas/DX):

The Building Automation System (BAS) shall send the RTU BACnet controller Occupied Bypass, Morning Warmup/Pre-Cool, Occupied/Unoccupied and Heat/Cool modes. If a BAS is not present, or communication is lost with the BAS the controller shall operate using default modes and setpoints.

Occupied:
During occupied periods, the supply fan shall run continuously and the economizer dampers shall open to minimum outside air position to maintain minimum ventilation requirements.

Occupied heating cycle:

On a drop in zone temperature, the unit controller will modulate the gas heat fully in order to maintain the zone temperature heating setpoint (70 deg, adjustable). On a rise of zone temperature, the reverse sequence will occur.

Occupied cooling cycle:
On a rise in zone temperature, when the economizer mode is enabled, the unit controller will modulate the economizer dampers from minimum position to full outside air in order to satisfy the zone temperature cooling setpoint. If the outside air damper is fully open and the setpoint is still not satisfied, the economizer dampers will return to minimum position, and the controller will energize the DX cooling stages. On a drop in zone temperature the reverse will occur.
If the economizer mode is not enabled, the outside air damper will be commanded to minimum position and the unit controller will energize the DX cooling stages directly to maintain the zone cooling setpoint.
Economizer Mode:
ENABLE (Comparative Enthalpy): Outside air (OA) enthalpy shall be compared with Return air (RA) enthalpy point. The economizer shall enable when OA enthalpy is less than RA enthalpy - 2.0 BTU/LB. The economizer shall disable when OA enthalpy is greater than RA enthalpy.

Unoccupied:
When the space temperature is below the unoccupied heating setpoint of 60.0 deg. F (adj.) the supply fan shall be commanded on, the outside air damper shall remain closed and the gas heat shall be enabled. When the space temperature rises above the unoccupied heating setpoint of 60.0 deg. F (adj.) plus the unoccupied differential of 4.0 deg. F (adj.) the supply fan shall stop and the gas heat shall be disabled. When the space temperature is above the unoccupied cooling setpoint of 85.0 deg. F (adj.) the supply fan shall be commanded on, the outside air damper shall open if economizing is enabled and remain closed if economizing is disabled and the DX cooling shall be enabled. When the space temperature falls below the unoccupied cooling setpoint of 85.0 deg. F minus the Unoccupied differential of 4.0 deg. F (adj.) the supply fan shall stop, the DX cooling shall be disabled and the outside air damper shall close.

Morning Warm-Up Mode:
During optimal start, if the average space temperature is below the occupied heating setpoint a morning warm-up mode shall be activated. When morning warm-up is initiated the unit shall enable the heating and fan(s). The outside air damper shall remain closed. When the space temperature reaches the occupied heating setpoint (adj.), the unit shall transition to the occupied mode.
Pre-Cool Mode:
During optimal start, if the average space temperature is above the occupied cooling setpoint, pre-cool mode shall be activated. When pre-cool is initiated the unit shall enable the fan and cooling or economizer. The outside air damper shall remain closed, unless economizing. When the space temperature reaches occupied cooling setpoint (adj.), the unit shall transition to the occupied mode.
Occupied Bypass:
The BAS shall monitor the status of the ON and CANCEL buttons of the space temperature sensors. When an occupied bypass request is received from a space sensor, the unit shall transition from its current occupancy mode to occupied bypass mode and the unit shall maintain the space temperature to the occupied setpoints (adj.).

Demand Control Ventilation (DCV):
Whenever the unit requires cooling and the economizer dampers are allowed to modulate, the DCV mode will be disabled.

If the unit is operating without economizer mode (heating or DX cooling is required), and the return air CO_2 level is greater than or equal to the Design Minimum CO_2 Setpoint, the unit shall be indexed to its “Short Term Ventilation Mode” (STV). In this mode, the outdoor air damper position shall be modulated proportionally between the standard minimum position and fully closed, based a space CO_2 reset schedule.

If during this STV mode there is a call for economizer cooling, the DCV/STV modes will be disabled and the economizer dampers may be opened further to outside air to satisfy the cooling request.

Filter Status:
A differential pressure switch shall monitor the differential pressure across the filter(s) when the fan is running. If the switch closes during normal operation a dirty filter alarm shall annunciate at the BAS.

Smoke Alarm:
A duct smoke detector will monitor any smoke alarms. Whenever an alarm should occur, the unit's supply fan, heating & cooling will be de-energized, the outside air damper will close and an alarm shall annunciate at the BAS.

Wresting Rm Packaged RTU-W (Gas/DX):

The Building Automation System (BAS) shall send the RTU BACnet controller Occupied Bypass, Morning Warmup/Pre-Cool, Occupied/Unoccupied and Heat/Cool modes. If a BAS is not present, or communication is lost with the BAS the controller shall operate using default modes and setpoints.
Occupied:
During occupied periods, the supply fan shall run continuously and the mixed air dampers shall open to maintain minimum ventilation requirements.

Occupied heating cycle:
On a drop in zone temperature, the unit controller will modulate the gas heat fully in order to maintain the zone temperature heating setpoint (70 deg, adjustable). On a rise of zone temperature, the reverse sequence will occur.

Occupied cooling cycle:
On a rise in zone temperature, when the economizer mode is enabled, the unit controller will modulate the economizer dampers from minimum position to full outside air in order to satisfy the zone temperature cooling setpoint. If the outside air damper is fully open and the setpoint is still not satisfied, the economizer dampers will return to minimum position, and the controller will energize the DX cooling stages. On a drop in zone temperature the reverse will occur.
If the economizer mode is not enabled, the outside air damper will be commanded to minimum position and the unit controller will energize the DX cooling stages directly to maintain the zone cooling setpoint.
Economizer Mode:
ENABLE (Comparative Enthalpy): Outside air (OA) enthalpy shall be compared with Return air (RA) enthalpy point. The economizer shall enable when OA enthalpy is less than RA enthalpy - 2.0 BTU/LB. The economizer shall disable when OA enthalpy is greater than RA enthalpy.

Unoccupied:
When the space temperature is below the unoccupied heating setpoint of 60.0 deg. F (adj.) the supply fan shall be commanded on, the outside air damper shall remain closed and the gas heat shall be enabled. When the space temperature rises above the unoccupied heating setpoint of 60.0 deg. F (adj.) plus the unoccupied differential of 4.0 deg. F (adj.) the supply fan shall stop and the gas heat shall be disabled. When the space temperature is above the unoccupied cooling setpoint of 85.0 deg. F (adj.) the supply fan shall be commanded on, the outside air damper shall open if economizing is enabled and remain closed if economizing is disabled and the DX cooling shall be enabled. When the space temperature falls below the unoccupied cooling setpoint of 85.0 deg. F minus the Unoccupied differential of 4.0 deg. F (adj.) the supply fan shall stop, the DX cooling shall be disabled and the outside air damper shall close.

Morning Warm-Up Mode:
During optimal start, if the average space temperature is below the occupied heating setpoint a morning

warm-up mode shall be activated. When morning warm-up is initiated the unit shall enable the heating and fan(s). The outside air damper shall remain closed. When the space temperature reaches the occupied heating setpoint (adj.), the unit shall transition to the occupied mode.
Pre-Cool Mode:
During optimal start, if the average space temperature is above the occupied cooling setpoint, pre-cool mode shall be activated. When pre-cool is initiated the unit shall enable the fan and cooling or economizer. The outside air damper shall remain closed, unless economizing. When the space temperature reaches occupied cooling setpoint (adj.), the unit shall transition to the occupied mode.
Occupied Bypass:
The BAS shall monitor the status of the ON and CANCEL buttons of the space temperature sensors. When an occupied bypass request is received from a space sensor, the unit shall transition from its current occupancy mode to occupied bypass mode and the unit shall maintain the space temperature to the occupied setpoints (adj.).
Discharge Air Temperature Reset Control:
The discharge air temperature setpoint shall be reset to the optimal setpoint communicated by the BAS. The BAS shall reset the discharge air temperature setpoint based on the current outside air temperature, but shall override this reset function and return the discharge air temperature setpoint to 55.0 deg. F (adj.) if more than two (adj.) zones begin to overheat. Also, the BAS shall override this reset function whenever outdoor dew point is higher than 60.0 deg. F (adj.) or indoor humidity is higher than 60% RH (adj.). If the discharge air temperature drops below the minimum limit, a low temperature alarm shall annunciate and the unit shall shut down. If the discharge air temperature rises above the maximum limit, a high temperature alarm shall annunciate.
Demand Control Ventilation (DCV):
If the return air CO_2 level is greater than or equal to the Design Minimum CO_2 Setpoint, the outdoor air damper shall open to the Design Minimum Outdoor Air Damper Setpoint. If there is a call for economizer cooling, the damper may be opened further to satisfy the cooling request.
If the return air CO_2 level is less than or equal to the DCV Minimum CO_2 Setpoint, the outdoor air damper shall close to the DCV Minimum Outdoor Air Damper Setpoint. If there is a call for economizer cooling, the damper may be opened further to satisfy the cooling request.
If the return air CO_2 level is greater than the DCV Minimum CO_2 Setpoint and less than the Design Minimum CO_2 Setpoint, the outdoor air damper position shall be modulated proportionally to the space CO_2 level relative to a target position between the DCV Minimum CO_2 Setpoint and the Design Minimum CO_2 Setpoint. If there is a call for economizer cooling, the damper may be opened further to satisfy the cooling request.

Filter Status:
A differential pressure switch shall monitor the differential pressure across the filter(s) when the fan is running. If the switch closes during normal operation a dirty filter alarm shall annunciate at the BAS.

Smoke Alarm:
A duct smoke detector will monitor any smoke alarms. Whenever an alarm should occur, the unit's supply fan, heating & cooling will be de-energized, the outside air damper will close and an alarm shall annunciate at the BAS.

Dedicated Outside Air System Unit w/ Energy Recovery (DOAS) Control

Following sequence is included in this Section for information. Manufacturer of thermal recovery units shall include following sequences in unit controller. BAS contractor shall provide components and sequences not included by manufacturer of unit.

Warm up cycle:
The supply fan will start and run continuously with the outside air damper closed, the exhaust air fan de-energized, the exhaust air damper closed, the bypass damper in the unit open, and the gas heat modulating to maintain the warm up temperature discharge temperature setpoint (90 deg, adjustable).

The duration of the warm up cycle shall be determined by the BAS operator's workstation, based on the outside air temperature and the building zone temperature (located in Team Rm).

Cool down cycle:
The supply fan will start and run continuously: stage 1 the outside air damper will be 100 % open, the exhaust air fan is started and run continuously with the exhaust air damper open and the bypass damper closed. If the outside air temperature is above 75 degrees than Stage 2 will bring on the DX controls for cooling: The outside air damper shall close, the exhaust damper will close, the bypass damper will open 100%. The exhaust fan shall be de-energized. The duration of the cool down cycle shall be determined by the BAS operator's workstation, based on the outside air temperature and the building zone temperature.

Occupied heating cycle:
The fan will run continuously with the outside air damper and exhaust air damper to the full open position and the bypass damper 100 % closed. On a drop in zone temperature, the gas heat will modulate to full heat. On a rise of zone temperature, the reverse sequence will occur.

Occupied cooling cycle:
The fan will run continuously with the outside air damper and exhaust damper open to full open position with the bypass damper 100 % closed. Stage 1: On a rise in zone temperature the system shall operate with 100 % outside air providing the air temperature is below 70 degrees. Stage 2; On a further rise in the averaging room temperature controls, the DX cooling shall be energized and OA damper shall be in the full open position. On a drop in zone temperature the reverse will occur.

Unoccupied cycle winter:
The unit fan will stop and the outside and exhaust air damper will close and the gas heat will modulate off. On a drop in zone temperature, the gas heat will modulate to full heat to satisfy the desired unoccupied heating setpoint (60 deg, adjustable).

Unoccupied cycle summer:
The unit fan will stop and the outside and exhaust air damper will close and all cooling controls will be off. On a rise in zone temperature, the DX cooling stages will cycle on to satisfy the desired unoccupied cooling setpoint (80 deg, adjustable).

Filter Status:
A differential pressure switch shall monitor the differential pressure across the filter(s) when the fan is running. If the switch closes during normal operation a dirty filter alarm shall annunciate at the BAS.

Smoke Alarm:
A duct smoke detector will monitor any smoke alarms. Whenever an alarm should occur, the unit's supply fan, heating & cooling will be de-energized, the outside air damper will close and an alarm shall annunciate at the BAS.

Split System AC Unit Control:

Warm-Up Cycle:
1. For a period of time prior to the scheduled occupancy time as determined by the optimum start algorithm, operate the heat pumps on full heat and full return air in order to bring the temperature up to occupied setpoint.

Occupied Cycle:

1. The heat pump fan will run continuously during the occupied cycle. On a rise in room temperature above 75°F (adj.), the heat pump will be indexed to cooling mode. The space sensor will cycle the unit compressor to maintain the space setpoint. On a fall in room temperature below 68°F (adj.), the heat pump will be indexed to the heating mode and the space sensor will cycle the unit compressor to maintain space setpoint.
2. The heat pump unit will and all of its functions will be connected to and operated by the BAS.

Unoccupied Cycle: The unit fan will cycle the unit fan at a reduced/setup night setpoint as sensed by the space sensor. The reduced setpoint will be adjustable for the BAS.

Room Sensors:

1. The room temperature sensor will have a momentary pushbutton that will act to restore the occupied cycle for a period of time defined in software.
2. The space sensor will have a 3°F (adj.) dead band.
3. All sensor inputs and actuator outputs from the controller will be available throughout the BAS.

Toilet Exhaust Fan Control (TX):

A. The BAS shall enable all exhaust fans to start based on the occupied schedule. A current switch for each fan shall confirm fan status.

Electric Cabinet Unit Heater (ECH) Control

Occupied Mode:

1. The DDC space thermostat shall energize fan and cycle the electric heating coil on & off as needed to maintain space temperature at occupied set point (70F, adjustable).

Unoccupied Mode:

1. The DDC space thermostat shall energize fan and cycle the electric heating coil on & off as needed to maintain space temperature at unoccupied set point (60F, adjustable).

END OF SECTION 230993

SECTION 232113 - HYDRONIC PIPING

PART 1 - GENERAL

1.1 SUMMARY

A. Section includes pipe and fitting materials and joining methods for the following:

1. Condensate-drain piping.

1.2 ACTION SUBMITTALS

A. Delegated-Design Submittal:

1. Design calculations and detailed fabrication and assembly of pipe anchors and alignment guides, hangers and supports for multiple pipes, expansion joints and loops, and attachments of the same to the building structure.
2. Locations of pipe anchors and alignment guides and expansion joints and loops.
3. Locations of and details for penetrations, including sleeves and sleeve seals for exterior walls, floors, basement, and foundation walls.
4. Locations of and details for penetration and firestopping for fire- and smoke-rated wall and floor and ceiling assemblies.

1.3 INFORMATIONAL SUBMITTALS

A. Field quality-control reports.

1.4 QUALITY ASSURANCE

A. ASME Compliance: Comply with ASME B31.9, "Building Services Piping," for materials, products, and installation.

PART 2 - PRODUCTS

2.1 PERFORMANCE REQUIREMENTS

A. Hydronic piping components and installation shall be capable of withstanding the following minimum working pressure and temperature unless otherwise indicated:

1. Hot-Water Heating Piping: 125 psig at 200 deg F (93 deg C).
2. Condensate-Drain Piping: 150 deg F

2.2 COPPER TUBE AND FITTINGS

A. Drawn-Temper Copper Tubing: ASTM B 88, Type L

2.3 DIELECTRIC FITTINGS

A. General Requirements: Assembly of copper alloy and ferrous materials with separating nonconductive insulating material. Include end connections compatible with pipes to be joined.

B. Dielectric Unions:

1. Manufacturers: Subject to compliance with requirements, provide products by one of the following:

a. A.Y. McDonald Mfg. Co.
b. HART Industrial Unions, LLC.
c. WATTS.

2. Description:

a. Standard: ASSE 1079.
b. Pressure Rating: 125 psig minimum at 180 deg F
c. End Connections: Solder-joint copper alloy and threaded ferrous.

PART 3 - EXECUTION

3.1 PIPING APPLICATIONS

A. Condensate-Drain Piping: Schedule 40 PVC plastic pipe and fittings and solvent-welded joints.

3.2 PIPING INSTALLATIONS

A. Drawing plans, schematics, and diagrams indicate general location and arrangement of piping systems. Install piping as indicated unless deviations to layout are approved on Coordination Drawings.

B. Install piping in concealed locations unless otherwise indicated and except in equipment rooms and service areas.

C. Install piping indicated to be exposed and piping in equipment rooms and service areas at right angles or parallel to building walls. Diagonal runs are prohibited unless specifically indicated otherwise.

D. Install piping above accessible ceilings to allow sufficient space for ceiling panel removal.

E. Install piping to permit valve servicing.

F. Install piping at indicated slopes.

G. Install piping free of sags and bends.

H. Install fittings for changes in direction and branch connections.

I. Install piping to allow application of insulation.

J. Select system components with pressure rating equal to or greater than system operating pressure.

K. Install groups of pipes parallel to each other, spaced to permit applying insulation and servicing of valves.

L. Install piping at a uniform grade of 0.2 percent upward in direction of flow.

M. Reduce pipe sizes using eccentric reducer fitting installed with level side up.

N. Install branch connections to mains using mechanically formed tee fittings in main pipe, with the branch connected to the bottom of the main pipe. For up-feed risers, connect the branch to the top of the main pipe.

O. Install unions in piping, NPS 2 and smaller, adjacent to valves, at final connections of equipment, and elsewhere as indicated.

P. Install shutoff valve immediately upstream of each dielectric fitting.

Q. Comply with requirements in Section 230553 "Identification for HVAC Piping and Equipment" for identifying piping.

3.3 DIELECTRIC FITTING INSTALLATION

A. Install dielectric fittings in piping at connections of dissimilar metal piping and tubing.

B. Dielectric Fittings for NPS 2 and Smaller: Use dielectric unions.

3.4 HANGERS AND SUPPORTS

A. Comply with requirements in Section 230529 "Hangers and Supports for HVAC Piping and Equipment" for hanger, support, and anchor devices. Comply with the following requirements for maximum spacing of supports.

B. Install the following pipe attachments:

1. Adjustable steel clevis hangers for individual horizontal piping less than 20 feet long.
2. Adjustable roller hangers and spring hangers for individual horizontal piping 20 feet or longer.
3. Pipe Roller: MSS SP-58, Type 44 for multiple horizontal piping 20 feet or longer, supported on a trapeze.
4. Spring hangers to support vertical runs.
5. Provide copper-clad hangers and supports for hangers and supports in direct contact with copper pipe.

6. On plastic pipe, install pads or cushions on bearing surfaces to prevent hanger from scratching pipe.

C. Install hangers for steel piping with the following maximum spacing and minimum rod sizes:

1. NPS 3/4 (DN 20): Maximum span, 7 feet
2. NPS 1 (DN 25): Maximum span, 7 feet
3. NPS 1-1/2 (DN 40): Maximum span, 9 feet

END OF SECTION 232113

SECTION 232116 - HYDRONIC PIPING SPECIALTIES

PART 1 - GENERAL

1.1 RELATED DOCUMENTS

A. Drawings and general provisions of the Contract, including General and Supplementary Conditions and Division 01 Specification Sections, apply to this Section.

1.2 SUMMARY

A. Section includes special-duty valves and specialties for the following:

1. Hot-water heating piping.
2. Condensate-drain piping.
3. Air-vent piping.
4. Safety-valve-inlet and -outlet piping.

1.3 ACTION SUBMITTALS

A. Product Data: For each type of the following:

1. Valves: Include flow and pressure drop curves based on manufacturer's testing for calibrated-orifice balancing valves and automatic flow-control valves.
2. Air-control devices.
3. Hydronic specialties.

1.4 CLOSEOUT SUBMITTALS

A. Operation and Maintenance Data: For air-control devices, hydronic specialties, and special-duty valves to include in emergency, operation, and maintenance manuals.

1.5 MAINTENANCE MATERIAL SUBMITTALS

A. Differential Pressure Meter: For each type of balancing valve and automatic flow control valve, include flowmeter, probes, hoses, flow charts, and carrying case.

1.6 QUALITY ASSURANCE

A. Pipe Welding: Qualify procedures and operators according to ASME Boiler and Pressure Vessel Code: Section IX.

1. Safety valves and pressure vessels shall bear the appropriate ASME label. Fabricate and stamp air separators and expansion tanks to comply with ASME Boiler and Pressure Vessel Code: Section VIII, Division 1.

PART 2 - PRODUCTS

2.1 PERFORMANCE REQUIREMENTS

A. Hydronic piping components and installation shall be capable of withstanding the following minimum working pressure and temperature unless otherwise indicated:

1. Hot-Water Heating Piping: refer to plans.
2. Condensate-Drain Piping: 150 deg F (66 deg C).
3. Air-Vent Piping: 200 deg F (93 deg C).
4. Safety-Valve-Inlet and -Outlet Piping: Equal to the pressure of the piping system to which it is attached.

2.2 VALVES

A. Gate, Globe, Check, Ball, and Butterfly Valves: Comply with requirements specified in Section 230523 “General-Duty Valves for HVAC Piping.”

B. Automatic Temperature-Control Valves, Actuators, and Sensors: Comply with requirements specified in Section 230923 "Control Valves.

C. Plastic Ball Valves:

1. Manufacturers: Subject to compliance with requirements, provide products by one of the following:

a. American Valve, Inc.
b. Asahi/America.
c. Charlotte Pipe and Foundry Company.
d. Colonial Engineering, Inc.
e. Georg Fischer Inc.
f. Hayward Flow Control.
g. IPEX USA LLC.
h. Jomar Valve.
i. KBI (King Bros. Industries).
j. Legend Valve & Fitting, Inc.
k. NIBCO INC.
l. Plast-O-Matic Valves, Inc.
m. SMC The Specialty Mfg. Co.
n. Thermoplastic Valves, Inc.
o. WATTS.

2. Body: One-, two-, or three-piece CPVC or PVC to match piping.
3. Ball: Full-port CPVC or PVC to match piping.
4. Seats: PTFE.
5. Seals: EPDM.
6. End Connections: Socket, union, or flanged.
7. Handle Style: Tee shape.
8. CWP Rating: Equal to piping service.
9. Maximum Operating Temperature: Equal to piping service.
10. Comply with MSS SP-122.

D. Plastic Butterfly Valves:

1. Manufacturers: Subject to compliance with requirements, provide products by one of the following:

   a. American Valve, Inc.
   b. Asahi/America.
   c. Colonial Engineering, Inc.
   d. Georg Fischer Inc.
   e. Hayward Flow Control.
   f. IPEX USA LLC.
   g. Legend Valve & Fitting, Inc.
   h. NIBCO INC.
   i. Plast-O-Matic Valves, Inc.
   j. SMC The Specialty Mfg. Co.
   k. Thermoplastic Valves, Inc.
   l. WATTS.

2. Body: PVC or CPVC to match piping wafer type for installation between flanges.
3. Disc: EPDM-coated steel.
4. Seats: PTFE.
5. Handle Style: Locking lever.
6. CWP Rating: Equal to piping service.
7. Maximum Operating Temperature: Equal to piping service.

E. Plastic Check Valves:

1. Manufacturers: Subject to compliance with requirements, provide products by one of the following:

   a. American Valve, Inc.
   b. Asahi/America.
   c. Colonial Engineering, Inc.
   d. Georg Fischer Inc.
   e. Hayward Flow Control.
   f. IPEX USA LLC.
   g. KBI (King Bros. Industries).
   h. Legend Valve & Fitting, Inc.
   i. NIBCO INC.
   j. Plast-O-Matic Valves, Inc.
   k. SMC The Specialty Mfg. Co.
   l. Thermoplastic Valves, Inc.
   m. WATTS.

2. Body: One-, two-, or three-piece PVC or CPVC to match piping.
3. Ends: Socket or flanged.
4. Seats: PTFE.
5. Check Style: Swing or ball type.
6. CWP Rating: Equal to piping service.
7. Maximum Operating Temperature: Equal to piping service.

F. Bronze, Calibrated-Orifice, Balancing Valves:

1. Manufacturers: Subject to compliance with requirements, provide products by one of the following:

a. Armstrong Pumps, Inc.
b. Bell & Gossett; a Xylem brand.
c. Flow Design, Inc.
d. Gerand Engineering Co.
e. Griswold Controls.
f. Hays Fluid Controls.
g. HCI; Hydronics Components Inc.
h. NIBCO INC.
i. NuTech Hydronic Specialty Products.
j. Oventrop Corporation.
k. TACO Comfort Solutions, Inc.
l. Tour & Andersson; available through Victaulic Company.
m. Tunstall Corporation.

2. Body: Bronze, ball or plug type with calibrated orifice or venturi.
3. Ball: Brass or stainless steel.
4. Plug: Resin.
5. Seat: PTFE.
6. End Connections: Threaded or socket.
7. Pressure Gage Connections: Integral seals for portable differential pressure meter.
8. Handle Style: Lever, with memory stop to retain set position.
9. CWP Rating: Minimum 125 psig (860 kPa).
10. Maximum Operating Temperature: 250 deg F (121 deg C).

G. Cast-Iron or Steel, Calibrated-Orifice, Balancing Valves:

1. Manufacturers: Subject to compliance with requirements, provide products by one of the following:

a. Armstrong Pumps, Inc.
b. Bell & Gossett; a Xylem brand.
c. Flow Design, Inc.
d. Gerand Engineering Co.
e. Griswold Controls.
f. Hays Fluid Controls.
g. HCI; Hydronics Components Inc.
h. NIBCO INC.
i. NuTech Hydronic Specialty Products.
j. Oventrop Corporation.
k. TACO Comfort Solutions, Inc.
l. Tour & Andersson; available through Victaulic Company.
m. Tunstall Corporation.

2. Body: Cast-iron or steel body, ball, plug, or globe pattern with calibrated orifice or venturi.
3. Ball: Brass or stainless steel.
4. Stem Seals: EPDM O-rings.
5. Disc: Glass and carbon-filled PTFE.
6. Seat: PTFE.
7. End Connections: Flanged or grooved.
8. Pressure Gage Connections: Integral seals for portable differential pressure meter.
9. Handle Style: Lever, with memory stop to retain set position.

10. CWP Rating: Minimum 125 psig (860 kPa).
11. Maximum Operating Temperature: 250 deg F (121 deg C).

H. Diaphragm-Operated, Pressure-Reducing Valves: ASME labeled.

1. Manufacturers: Subject to compliance with requirements, provide products by one of the following:

   a. AMTROL, Inc.
   b. Armstrong Pumps, Inc.
   c. Bell & Gossett; a Xylem brand.
   d. Spence Engineering Company, Inc.
   e. WATTS.

2. Body: Bronze or brass.
3. Disc: Glass and carbon-filled PTFE.
4. Seat: Brass.
5. Stem Seals: EPDM O-rings.
6. Diaphragm: EPT.
7. Low inlet-pressure check valve.
8. Valve Seat and Stem: Noncorrosive.
9. Valve Size, Capacity, and Operating Pressure: Selected to suit system in which installed, with operating pressure and capacity factory set and field adjustable.

I. Diaphragm-Operated Safety Valves: ASME labeled.

1. Manufacturers: Subject to compliance with requirements, provide products by one of the following:

   a. AMTROL, Inc.
   b. Armstrong Pumps, Inc.
   c. Bell & Gossett; a Xylem brand.
   d. Spence Engineering Company, Inc.
   e. WATTS.

2. Body: Bronze or brass.
3. Disc: Glass and carbon-filled PTFE.
4. Seat: Brass.
5. Stem Seals: EPDM O-rings.
6. Diaphragm: EPT.
7. Wetted, Internal Work Parts: Brass and rubber.
8. Valve Seat and Stem: Noncorrosive.
9. Valve Size, Capacity, and Operating Pressure: Comply with ASME Boiler and Pressure Vessel Code: Section IV, and selected to suit system in which installed, with operating pressure and capacity factory set and field adjustable.

J. Automatic Flow-Control Valves:

1. Manufacturers: Subject to compliance with requirements, provide products by one of the following:

   a. Caleffi.
   b. Flow Design, Inc.
   c. Flowcon Americas LLC.
   d. Griswold Controls.
   e. HCI; Hydronics Components Inc.

f. NIBCO INC.
g. NuTech Hydronic Specialty Products.
h. Oventrop Corporation.
i. Tunstall Corporation.

2. Body: Brass or ferrous metal.
3. Piston and Spring Assembly: Stainless steel, Corrosion resistant, tamper proof, self-cleaning, and removable.
4. Combination Assemblies: Include bronze or brass-alloy ball valve.
5. Identification Tag: Marked with zone identification, valve number, and flow rate.
6. Size: Same as pipe in which installed.
7. Performance: Maintain constant flow, plus or minus 5 percent over system pressure fluctuations.
8. Minimum CWP Rating: 175 psig (1207 kPa).
9. Maximum Operating Temperature: 250 deg F (121 deg C).

2.3 AIR-CONTROL DEVICES

A. Manual Air Vents:

1. Manufacturers: Subject to compliance with requirements, provide products by one of the following:

a. AMTROL, Inc.
b. Armstrong Pumps, Inc.
c. Bell & Gossett; a Xylem brand.
d. Hays Fluid Controls.
e. HCI; Hydronics Components Inc.
f. Nexus Valve, Inc.
g. NuTech Hydronic Specialty Products.
h. TACO Comfort Solutions, Inc.

2. Body: Bronze.
3. Internal Parts: Nonferrous.
4. Operator: Screwdriver or thumbscrew.
5. Inlet Connection: NPS 1/2 (DN 15).
6. Discharge Connection: NPS 1/8 (DN 6).
7. CWP Rating: 150 psig (1035 kPa).
8. Maximum Operating Temperature: 225 deg F (107 deg C).

B. Automatic Air Vents:

1. Manufacturers: Subject to compliance with requirements, provide products by one of the following:

a. AMTROL, Inc.
b. Armstrong Pumps, Inc.
c. Bell & Gossett; a Xylem brand.
d. Nexus Valve, Inc.
e. NuTech Hydronic Specialty Products.
f. Spirotherm, Inc.
g. TACO Comfort Solutions, Inc.

2. Body: Bronze or cast iron.
3. Internal Parts: Nonferrous.

4. Operator: Noncorrosive metal float.
5. Inlet Connection: NPS 1/2 (DN 15).
6. Discharge Connection: NPS 1/4 (DN 8).
7. CWP Rating: 150 psig (1035 kPa).
8. Maximum Operating Temperature: 240 deg F (116 deg C).

C. Air Purgers:

1. Manufacturers: Subject to compliance with requirements, provide products by one of the following:

   a. AMTROL, Inc.
   b. Armstrong Pumps, Inc.
   c. Bell & Gossett; a Xylem brand.
   d. Spirotherm, Inc.
   e. TACO Comfort Solutions, Inc.

2. Body: Cast iron with internal baffles that slow the water velocity to separate the air from solution and divert it to the vent for quick removal.
3. Maximum Working Pressure: 150 psig (1035 kPa).
4. Maximum Operating Temperature: 250 deg F (121 deg C).

2.4 HYDRONIC PIPING SPECIALTIES

A. Y-Pattern Strainers:

1. Body: ASTM A 126, Class B, cast iron with bolted cover and bottom drain connection.
2. End Connections: Threaded ends for NPS 2 (DN 50) and smaller; flanged ends for NPS 2-1/2 (DN 65) and larger.
3. Strainer Screen: Stainless-steel, 20-mesh strainer, or perforated stainless-steel basket.
4. CWP Rating: 125 psig (860 kPa).

B. Basket Strainers:

1. Body: ASTM A 126, Class B, high-tensile cast iron with bolted cover and bottom drain connection.
2. End Connections: Threaded ends for NPS 2 (DN 50) and smaller; flanged ends for NPS 2-1/2 (DN 65) and larger.
3. Strainer Screen: 40-mesh startup strainer, and perforated stainless-steel basket with 50 percent free area.
4. CWP Rating: 125 psig (860 kPa).

C. T-Pattern Strainers:

1. Body: Ductile or malleable iron with removable access coupling and end cap for strainer maintenance.
2. End Connections: Grooved ends.

3. Strainer Screen: 40-mesh startup strainer, and perforated stainless-steel basket with 57 percent free area.
4. CWP Rating: 750 psig (5170 kPa).

D. Stainless-Steel Bellow, Flexible Connectors:

1. Body: Stainless-steel bellows with woven, flexible, bronze, wire-reinforcing protective jacket.
2. End Connections: Threaded or flanged to match equipment connected.
3. Performance: Capable of 3/4-inch (20-mm) misalignment.
4. CWP Rating: 150 psig (1035 kPa).
5. Maximum Operating Temperature: 250 deg F (121 deg C).

E. Spherical, Rubber, Flexible Connectors:

1. Body: Fiber-reinforced rubber body.
2. End Connections: Steel flanges drilled to align with Classes 150 and 300 steel flanges.
3. Performance: Capable of misalignment.
4. CWP Rating: 150 psig (1035 kPa).
5. Maximum Operating Temperature: 250 deg F (121 deg C).

F. Expansion Fittings: Comply with requirements in Section 230516 "Expansion Fittings and Loops for HVAC Piping."Section 15124 "Expansion Fittings and Loops for HVAC Piping."

PART 3 - EXECUTION

3.1 VALVE APPLICATIONS

A. Install shutoff-duty valves at each branch connection to supply mains and at supply connection to each piece of equipment.

B. Install calibrated-orifice, balancing valves at each branch connection to return main.

C. Install calibrated-orifice, balancing valves in the return pipe of each heating or cooling terminal.

D. Install check valves at each pump discharge and elsewhere as required to control flow direction.

E. Install safety valves at hot-water generators and elsewhere as required by ASME Boiler and Pressure Vessel Code. Install drip-pan elbow on safety-valve outlet and pipe without valves to the outdoors; pipe drain to nearest floor drain or as indicated on Drawings. Comply with ASME Boiler and Pressure Vessel Code: Section VIII, Division 1, for installation requirements.

F. Install pressure-reducing valves at makeup-water connection to regulate system fill pressure.

3.2 HYDRONIC SPECIALTIES INSTALLATION

A. Install manual air vents at high points in piping, at heat-transfer coils, and elsewhere as required for system air venting.

B. Install automatic air vents at high points of system piping in mechanical equipment rooms only. Install manual vents at heat-transfer coils and elsewhere as required for air venting.

END OF SECTION 232116

SECTION 232123 - HYDRONIC PUMPS

PART 1 - GENERAL

1.1 RELATED DOCUMENTS

A. Drawings and general provisions of the Contract, including General and Supplementary Conditions and Division 1 Specification Sections, apply to this Section.

1.2 SUMMARY

A. This Section includes the following:

1. Base-mounted, end-suction centrifugal pumps.

1.3 DEFINITIONS

A. Buna-N: Nitrile rubber.

B. EPT: Ethylene propylene terpolymer.

1.4 SUBMITTALS

A. Product Data: Include certified performance curves and rated capacities, operating characteristics, furnished specialties, final impeller dimensions, and accessories for each type of product indicated. Indicate pump's operating point on curves.

B. Shop Drawings: Show pump layout and connections. Include setting drawings with templates for installing foundation and anchor bolts and other anchorages.

1. Wiring Diagrams: Power, signal, and control wiring.

C. Operation and Maintenance Data: For pumps to include in emergency, operation, and maintenance manuals.

1.5 QUALITY ASSURANCE

A. Source Limitations: Obtain hydronic pumps through one source from a single manufacturer.

B. Electrical Components, Devices, and Accessories: Listed and labeled as defined in NFPA 70, Article 100, by a testing agency acceptable to authorities having jurisdiction, and marked for intended use.

C. UL Compliance: Comply with UL 778 for motor-operated water pumps.

1.6 DELIVERY, STORAGE, AND HANDLING

A. Manufacturer's Preparation for Shipping: Clean flanges and exposed machined metal surfaces and treat with anticorrosion compound after assembly and testing. Protect flanges, pipe openings, and nozzles with wooden flange covers or with screwed-in plugs.

B. Store pumps in dry location.

C. Retain protective covers for flanges and protective coatings during storage.

D. Protect bearings and couplings against damage from sand, grit, and other foreign matter.

E. Comply with pump manufacturer's written rigging instructions.

1.7 COORDINATION

A. Coordinate size and location of concrete bases. Cast anchor-bolt inserts into bases. Concrete, reinforcement, and formwork requirements are specified in Division 3.

1.8 EXTRA MATERIALS

A. Furnish extra materials described below that match products installed and that are packaged with protective covering for storage and identified with labels describing contents.

1. Mechanical Seals**:** One space set of mechanical seals for each pump.

PART 2 - PRODUCT

2.1 MANUFACTURERS

A. Manufacturers: Subject to compliance with requirements, manufacturers offering products that may be incorporated into the Work include the following:

a. Bell & Gossett; Div. of ITT Industries.
b. Armstrong Pumps Inc.
c. Taco, Inc.
d. or Approved Equal.

2.2 BASED MOUNTED PUMPS

A. Furnish and install pumps with capacities as shown on plans. Pumps shall be base mounted, single-stage, end suction design with a foot mounted volute to allow servicing of the impeller and bear assembly without disturbing piping connections.

B. Pump casing shall be of Class 30 cast iron with integrally cast pedestal support feet. The impeller shall be of cast bronze enclosed type, dynamically balanced, keyed to the shaft and secured by locking capscrew:

C. The liquid cavity shall be sealed off at the pump shaft by an internally-flushed mechanical seal with ceramic seal seat and carbon seal ring, suitable for continuous operation at 225°F. A replaceable bronze shaft sleeve shall be completely cover the wetted area under the seal.

D. Pumps shall be rated for minimum of 175 psi working pressure. Volute shall have gauge tappings at the suction and discharge nozzles and vent and drain tapping at the top and bottom.

E. Base plate shall be of structural steel or fabricated steel channel with fully enclosed sides and ends, and securely welded cross members. Grouting area shall be fully opened. A flexible type, center dropout design coupler, capable of absorbing torsional vibration, shall be employed between the pump and motor. Coupler shall be shielded by a coupler guard securely fastened to the base.

F. Motor shall meet NEMA specifications and shall be the size, voltage and enclosure called for on the plans. Pump and motor shall be factory aligned, and shall be realigned by contractor after installation.

G. Each pump shall be factory tested per Hydraulic Institute standards. It shall then be thoroughly cleaned and painted with at least one coat of high-grade machinery enamel prior to shipment.

H. Capacities and Characteristics: Refer to Pump Schedules on the drawings.

2.3 PUMP SPECIALTY FITTINGS

A. Suction Diffuser: Angle pattern, 175-psig pressure rating, cast/ductile iron body and end cap, pump-inlet fitting; with bronze startup and bronze or stainless-steel permanent strainers; bronze or stainless-steel straightening vanes; drain plug; and factory-fabricated support.

B. Triple-Duty Valve: Angle or straight pattern, 175-psig pressure rating, cast/ductile iron body, pump-discharge fitting; with drain plug and bronze-fitted shutoff, balancing, and check valve features. Brass gage ports with integral check valve, and orifice for flow measurement.

PART 3 - EXECUTION

3.1 EXAMINATION

A. Examine equipment foundations and anchor-bolt locations for compliance with requirements for installation tolerances and other conditions affecting performance of work.

B. Examine roughing-in for piping systems to verify actual locations of piping connections before pump installation.

C. Examine foundations and inertia bases for suitable conditions where pumps are to be installed.

D. Proceed with installation only after unsatisfactory conditions have been corrected.

3.2 PUMP INSTALLATION

A. Install pumps with access for periodic maintenance including removal of motors, impellers, couplings, and accessories.

B. Independently support pumps and piping so weight of piping is not supported by pumps and weight of pumps is not supported by piping.

C. Equipment Mounting:
   1. Install base-mounted pumps on cast-in-place concrete equipment bases. Comply with requirements for equipment bases and foundations specified in Section 033000 "Cast-in-Place Concrete."

3.3 ALIGNMENT

A. Align pump and motor shafts and piping connections after setting on foundation, grout has been set and foundation bolts have been tightened, and piping connections have been made.

B. Comply with pump and coupling manufacturers' written instructions.

C. Adjust pump and motor shafts for angular and offset alignment.

D. After alignment is correct, tighten foundation bolts evenly but not too firmly. Completely fill baseplate with nonshrink, nonmetallic grout while metal blocks and shims or wedges are in place. After grout has cured, fully tighten foundation bolts.

3.4 CONNECTIONS

A. Piping installation requirements are specified in other Division 23 Sections. Drawings indicate general arrangement of piping, fittings, and specialties.

B. Install piping adjacent to machine to allow service and maintenance.

C. Connect piping to pumps. Install valves that are same size as piping connected to pumps.

D. Install suction and discharge pipe sizes equal to or greater than diameter of pump nozzles.

E. Install check valve and throttling / triple-duty valve on discharge side of pumps.

F. Install Y-type strainer / suction diffuser and shutoff valve on suction side of pumps.

G. Install flexible connectors on suction and discharge sides of base-mounted pumps between pump casing and valves.

H. Install pressure gages on pump suction and discharge, at integral pressure-gage tapping, or install single gage with multiple input selector valve.

I. Install electrical connections for power, controls, and devices.

J. Ground equipment according to Division 26 Section "Grounding and Bonding for Electrical Systems."

K. Connect wiring according to Division 26 Section "Low-Voltage Electrical Power Conductors and Cables."

3.5 STARTUP SERVICE

A. Engage a factory-authorized service representative to perform startup service.

1. Complete installation and startup checks according to manufacturer's written instructions.
2. Check piping connections for tightness.
3. Clean strainers on suction piping.
4. Perform the following startup checks for each pump before starting:

    a. Verify bearing lubrication.
    b. Verify that pump is free to rotate by hand and that pump for handling hot liquid is free to rotate with pump hot and cold. If pump is bound or drags, do not operate until cause of trouble is determined and corrected.
    c. Verify that pump is rotating in the correct direction.

5. Prime pump by opening suction valves and closing drains, and prepare pump for operation.
6. Start motor.
7. Open discharge valve slowly.

3.6 DEMONSTRATION

A. Engage a factory-authorized service representative to train Owner's maintenance personnel to adjust, operate, and maintain hydronic pumps.

END OF SECTION 232123

SECTION 232300 - REFRIGERANT PIPING

PART 1 - GENERAL

1.1 RELATED DOCUMENTS

A. Drawings and general provisions of the Contract, including General and Supplementary Conditions and Division 1 Specification Sections, apply to this Section.

1.2 SUMMARY

A. This Section includes refrigerant piping used for air-conditioning applications.

B. Related Sections include the following:

1. Division 7 Section "Through-Penetration Firestop Systems" for materials and methods for sealing pipe penetrations through fire and smoke barriers.
2. Division 7 Section "Joint Sealants" for materials and methods for sealing pipe penetrations through exterior walls.
3. Division 23 Section "Hangers and Supports" for pipe supports and installation requirements.
4. Division 23 Section "Mechanical Identification" for labeling and identifying refrigerant piping.

1.3 SUBMITTALS

A. Product Data: For each type of valve and refrigerant piping specialty indicated. Include pressure drop, based on manufacturer's test data, for thermostatic expansion valves, solenoid valves, and pressure-regulating valves.

B. Shop Drawings: Show layout of refrigerant piping and specialties, including pipe, tube, and fitting sizes, flow capacities, valve arrangements and locations, slopes of horizontal runs, oil traps, double risers, wall and floor penetrations, and equipment connection details. Show interface and spatial relationship between piping and equipment.

1. Refrigerant piping indicated is schematic only. Size piping and design the actual piping layout, including oil traps, double risers, specialties, and pipe and tube sizes, to ensure proper operation and compliance with warranties of connected equipment.

1.4 QUALITY ASSURANCE

A. Welding: Qualify procedures and personnel according to ASME Boiler and Pressure Vessel Code: Section IX; "Welding and Brazing Qualifications."

B. ASHRAE Standard: Comply with ASHRAE 15, "Safety Code for Mechanical Refrigeration."

C. ASME Standard: Comply with ASME B31.5, "Refrigeration Piping."

D. UL Standard: Provide products complying with UL 207, "Refrigerant-Containing Components and Accessories, Nonelectrical"; or UL 429, "Electrically Operated Valves."

1.5 COORDINATION

A. Coordinate layout and installation of refrigerant piping and suspension system components with other construction, including light fixtures, HVAC equipment, fire-suppression-system components, and partition assemblies.

B. Coordinate pipe sleeve installations for foundation wall penetrations.

C. Coordinate pipe sleeve installations for penetrations in exterior walls and floor assemblies. Coordinate with requirements for firestopping specified in Division 7 Section "Through-Penetration Firestop Systems" for materials and methods for sealing pipe penetrations through fire and smoke barriers.

D. Coordinate pipe fitting pressure classes with products specified in related Sections.

PART 2 - PRODUCTS

2.1 MANUFACTURERS

A. Available Manufacturers: Subject to compliance with requirements, manufacturers offering products that may be incorporated into the Work include, but are not limited to, the following:

B. Manufacturers: Subject to compliance with requirements, provide products by one of the following:

1. Refrigerants:

a. Allied Signal, Inc./Fluorine Products; Genetron Refrigerants.
b. DuPont Company; Fluorochemicals Div.
c. Elf Atochem North America, Inc.; Fluorocarbon Div.
d. ICI Americas Inc./ICI KLEA; Fluorochemicals Bus.

2. Refrigerant Valves and Specialties:

a. Climate & Industrial Controls Group; Parker-Hannifin Corp.; Refrigeration & Air Conditioning Division.
b. Danfoss Electronics, Inc.
c. Emerson Electric Company; Alco Controls Div.
d. Henry Valve Company.
e. Sporlan Valve Company.

2.2 COPPER TUBE AND FITTINGS

A. Drawn-Temper Copper Tube: Type L (ASTM B 88M, Type B).

B. Annealed-Temper Copper Tube: Type L (ASTM B 88M, Type B).

C. Wrought-Copper Fittings: ASME B16.22.

D. Wrought-Copper Unions: ASME B16.22.

E. Brazing Filler Metals: AWS A5.8, Classification BAg-1 (silver) or BAg-2 (silver)

F. Flexible Connectors: 500-psig (3450-kPa) minimum operating pressure; seamless tin-bronze core, high-tensile bronze-braid covering, and solder-joint end connections; dehydrated, pressure tested, minimum 7 inches (180mm) long

2.3 VALVES

A. Diaphragm Packless Valves: 500-psig (3450-kPa) working pressure and 275 deg F (135 deg C) working temperature; globe design with straight-through or angle pattern; forged-brass or bronze body and bonnet, phosphor bronze and stainless-steel diaphragms, rising stem and handwheel, stainless-steel spring, nylon seat disc, and with solder-end connections.

B. Packed-Angle Valves: 500-psig (3450-kPa) working pressure and 275 deg F (135 deg C) working temperature; forged-brass or bronze body, forged-brass seal caps with copper gasket, back seating, rising stem and seat, molded stem packing, and with solder-end connections.

C. Check Valves Smaller Than NPS 1 (DN 25): 400-psig (2760-kPa) operating pressure and 285 deg F (141 deg C) operating temperature; cast-brass body, with removable piston, polytetrafluoroethylene seat, and stainless-steel spring; globe design. Valve shall be straight-through pattern, with solder-end connections.

D. Check Valves, NPS 1 (DN 25) and Larger: 400-psig (2760-kPa) operating pressure and 285 deg F (141 deg C) operating temperature; cast-bronze body, with cast-bronze or forged-brass bolted bonnet; floating piston with mechanically retained polytetrafluoroethylene seat disc. Valve shall be straight-through or angle pattern, with solder-end connections.

E. Service Valves: 500-psig (3450-kPa) pressure rating; forged-brass body with copper stubs, brass caps, removable valve core, integral ball check valve, and with solder-end connections.

F. Solenoid Valves: Comply with ARI 760; 250 deg F (121 deg C) temperature rating and 400-psig (2760-kPa) working pressure; forged brass, with polytetrafluoroethylene valve seat, 2-way, straight-through pattern, and solder-end connections; manual operator; fitted with suitable NEMA 250 enclosure of type required by location, with 1/2-inch (16-GRC) conduit adapter and 24/120-V.

G. Pressure-Regulating Valves: Comply with ARI 770; pilot operated, forged brass or cast bronze, stainless-steel bottom spring, pressure-gage tappings, 24-V dc standard coil, and wrought-copper fittings for solder-end connections; suitable for refrigerant specified.

H. Pressure-Regulating Valves: Comply with ARI 770; direct acting, brass; with pilot operator, stainless-steel diaphragm, standard coil, and solder-end connection; suitable for refrigerant specified.

I. Pressure Relief Valves: Straight-through or angle pattern, brass body and disc, neoprene seat, and factory sealed and ASME labeled for standard pressure setting.

J. Thermostatic Expansion Valves: Comply with ARI 750; brass body with stainless-steel parts; thermostatic-adjustable, modulating type; size and operating characteristics as recommended by manufacturer of evaporator, and factory set for superheat requirements; solder-end connections; with sensing bulb, distributor having side connection for hot-gas bypass line, and external equalizer line.

K. Hot-Gas Bypass Valve: Pulsating-dampening design, stainless-steel bellows and polytetrafluoroethylene valve seat; adjustable; sized for capacity equal to last step of compressor unloading; with solder-end connections.

2.4 REFRIGERANT PIPING SPECIALITIES

A. Straight- or Angle-Type Strainers: 500-psig (3450-kPa) working pressure; forged-brass or steel body with stainless-steel wire or brass-reinforced Monel screen of 80 to 100 mesh in liquid lines up to 1-1/8 inches (30 mm), 60 mesh in larger liquid lines, and 40 mesh in suction lines; with screwed cleanout plug and solder-end connections.

B. Moisture/Liquid Indicators: 500-psig (3450-kPa) maximum working pressure and 200 deg F (93 deg C) operating temperature; all-brass body with replaceable, polished, optical viewing window with color-coded moisture indicator; with solder-end connections.

C. Replaceable-Core Filter-Dryers: 500-psig (3450-kPa) maximum working pressure; heavy gage protected with corrosion-resistant-painted steel shell, flanged ring and spring, ductile-iron cover plate with steel cap screws; wrought-copper fittings for solder-end connections; with replaceable-core kit, including gaskets and the following:

1. Filter Cartridge: Pleated media with integral end rings, stainless-steel support, ARI 730 rated for capacity.
2. Filter-Dryer Cartridge: Pleated media with solid-core sieve with activated alumina, ARI 730 rated for capacity.
3. Wax Removal Cartridge: Molded, bonded core of activated charcoal and desiccant with integral gaskets.

D. Permanent Filter-Dryer: 350-psig (2410-kPa) maximum operating pressure and 225 deg F (107 deg C) maximum operating temperature; steel shell and wrought-copper fittings for solder-end connections; molded-felt core surrounded by desiccant.

E. Mufflers: 500-psig (3450-kPa) operating pressure, welded-steel construction with fusible plug; sized for refrigeration capacity.

2.5 RECEIVERS

A. Receivers, 6-Inch (150-mm) Diameter and Smaller: ARI 495, UL listed, steel, brazed, 400-psig (2760-kPa) pressure rating, with tappings for inlet, outlet, and pressure relief valve.

B. Receivers Larger Than 6-Inch (150-mm) Diameter: ARI 495, welded steel, tested and stamped according to ASME Boiler and Pressure Vessel Code: Section VIII; 400-psig (2760-kPa) pressure rating, with tappings for liquid inlet and outlet valves, pressure relief valve, and liquid-level indicator.

PART 3 - EXECUTION

3.1 PIPING APPLICATIONS

A. Aboveground, within Building: Type L (Type B) drawn-copper tubing.

3.2 VALVE APPLICATIONS

A. Install diaphragm packless or packed-angle valves in suction and discharge lines of compressor, for gage taps at hot-gas bypass regulators, on each side of strainers.

B. Install check valves in compressor discharge lines and in condenser liquid lines on multiple condenser systems.

C. Install packed-angle valve in liquid line between receiver shutoff valve and thermostatic expansion valve for system charging.

D. Install diaphragm packless or packed-angle valves on each side of strainers and dryers, in liquid and suction lines at evaporators, and elsewhere as indicated.

E. Install a full-sized, three-valve bypass around each dryer.

F. Install solenoid valves upstream from each expansion valve and hot-gas bypass valve.

1. Install solenoid valves in horizontal lines with coil at top.
2. Electrical wiring for solenoid valves is specified in Division 16 Sections. Coordinate electrical requirements and connections.

G. Install thermostatic expansion valves as close as possible to evaporator.

1. If refrigerant distributors are used, install them directly on expansion-valve outlet.
2. Install valve so diaphragm case is warmer than bulb.
3. Secure bulb to clean, straight, horizontal section of suction line using two bulb straps. Do not mount bulb in a trap or at bottom of the line.
4. If external equalizer lines are required, make connection where it will reflect suction-line pressure at bulb location.

H. Install pressure-regulating and pressure relief valves as required by ASHRAE 15. Pipe pressure relief valve discharge to outside.

3.3 SPECIALTY APPLICATIONS

A. Install liquid indicators in liquid line leaving condenser, in liquid line leaving receiver, and on leaving side of liquid solenoid valves.

B. Install strainers immediately upstream from each automatic valve, including expansion valves, solenoid valves, hot-gas bypass valves, and compressor suction valves.

C. Install strainers in main liquid line where multiple expansion valves with integral strainers are used.

D. Install strainers in suction line of steel pipe.

E. Install moisture-liquid indicators in liquid lines between filter-dryers and thermostatic expansion valves and in liquid line to receiver.

F. Install pressure relief valves on ASME receivers; pipe discharge to outdoors.

G. Install replaceable-core filter-dryers in vertical liquid line adjacent to receivers and before each solenoid valve.

H. Install permanent filter-dryers in low-temperature systems, in systems using hermetic compressors, and before each solenoid valve.

I. Install solenoid valves in liquid line of systems operating with single pump-out or pump-down compressor control, in liquid line of single or multiple evaporator systems, and in oil bleeder lines from flooded evaporators to stop flow of oil and refrigerant into suction line when system shuts down.

J. Install receivers, sized to accommodate pump-down charge, on systems 5 tons (17.5 kW) and larger and on systems with long piping runs.

K. Install flexible connectors at or near compressors.

3.4 PIPING INSTALLATION

A. Install refrigerant piping according to ASHRAE 15.

B. Basic piping installation requirements are specified in Division 15 Section "Basic Mechanical Materials and Methods."

C. Install piping as short and direct as possible, with a minimum number of joints, elbows, and fittings.

D. Arrange piping to allow inspection and service of compressor and other equipment. Install valves and specialties in accessible locations to allow for service and inspection.

E. Install piping with adequate clearance between pipe and adjacent walls and hangers or between pipes for insulation installation. Use sleeves through floors, walls, or ceilings, sized to permit installation of full-thickness insulation.

F. Install copper tubing in rigid or flexible conduit in locations where copper tubing will be exposed to mechanical injury.

G. Slope refrigerant piping as follows:

1. Install horizontal hot-gas discharge piping with a uniform slope downward away from compressor.
2. Install horizontal suction lines with a uniform slope downward to compressor.
3. Install traps and double risers to entrain oil in vertical runs.
4. Liquid lines may be installed level.

H. Install bypass around moisture-liquid indicators in lines larger than NPS 2 (DN 50).

I. Install unions to allow removal of solenoid valves, pressure-regulating valves, and expansion valves and at connections to compressors and evaporators.

J. When brazing, remove solenoid-valve coils and sight glasses; also remove valve stems, seats, and packing, and accessible internal parts of refrigerant specialties. Do not apply heat near expansion valve bulb.

K. Hanger, support, and anchor products are specified in Division 15 Section "Hangers and Supports."

L. Install the following pipe attachments:

1. Adjustable steel clevis hangers for individual horizontal runs less than 20 feet long.
2. Roller hangers and spring hangers for individual horizontal runs 20 feet or longer.
3. Pipe rollers for multiple horizontal runs 20 feet or longer, supported by a trapeze.
4. Spring hangers to support vertical runs.

M. Install hangers for copper tubing with the following maximum spacing and minimum rod sizes:

1. NPS 1/2 (DN 15): Maximum span, 60 inches; minimum rod size, 1/4 inch.
2. NPS 5/8 (DN 18): Maximum span, 60 inches; minimum rod size, 1/4 inch.
3. NPS 1 (DN 25): Maximum span, 72 inches; minimum rod size, 1/4 inch.
4. NPS 1-1/4 (DN 32): Maximum span, 96 inches; minimum rod size, 3/8 inch.
5. NPS 1-1/2 (DN 40): Maximum span, 96 inches; minimum rod size, 3/8 inch.
6. NPS 2 (DN 50): Maximum span, 96 inches; minimum rod size, 3/8 inch.
7. NPS 2-1/2 (DN 65): Maximum span, 108 inches; minimum rod size, 3/8 inch.

N. Install hangers for steel piping with the following maximum spacing and minimum rod sizes:

1. NPS 1/2 (DN 15): Maximum span, 84 inches; minimum rod size, 1/4 inch.
2. NPS 3/4 (DN 20): Maximum span, 84 inches; minimum rod size, 1/4 inch.
3. NPS 1 (DN 25): Maximum span, 84 inches; minimum rod size, 1/4 inch.
4. NPS 1-1/2 (DN 40): Maximum span, 108 inches; minimum rod size, 3/8 inch.
5. NPS 2 (DN 50): Maximum span, 10 feet; minimum rod size, 3/8 inch.
6. NPS 2-1/2 (DN 65): Maximum span, 11 feet; minimum rod size, 3/8 inch.

O. Support vertical runs at each floor.

3.5 PIPE JOINT CONSTRUCTION

A. Braze joints according to Division 15 Section "Basic Mechanical Materials and Methods."

B. Fill pipe and fittings with an inert gas (nitrogen or carbon dioxide) during brazing to prevent scale formation.

3.6 FIELD QUALITY CONTROL

A. Test and inspect refrigerant piping according to ASME B31.5, Chapter VI.

1. Test refrigerant piping, specialties, and receivers. Isolate compressor, condenser, evaporator, and safety devices from test pressure.

2. Test high- and low-pressure side piping of each system at not less than the lower of the design pressure or the setting of pressure relief device protecting high and low side of system.

   a. System shall maintain test pressure at the manifold gage throughout duration of test.
   b. Test joints and fittings by brushing a small amount of soap and glycerine solution over joint.
   c. Fill system with nitrogen to raise a test pressure of 150 psig (1035 kPa) or higher as required by authorities having jurisdiction.
   d. Remake leaking joints using new materials, and retest until satisfactory results are achieved.

3.7 ADJUSTING

A. Adjust thermostatic expansion valve to obtain proper evaporator superheat requirements.

B. Adjust high- and low-pressure switch settings to avoid short cycling in response to fluctuating suction pressure.

C. Adjust set-point temperature of the conditioned air or chilled-water controllers to the system design temperature.

D. Perform the following adjustments before operating the refrigeration system, according to manufacturer's written instructions:
   1. Check compressor oil level above center of sight glass.
   2. Open compressor suction and discharge valves.
   3. Open refrigerant valves, except bypass valves that are used for other purposes.
   4. Check compressor-motor alignment, and lubricate motors and bearings.

3.8 CLEANING

A. Before installing copper tubing other than Type ACR, clean tubing and fittings with trichloroethylene.

B. Replace core of filter-dryer after system has been adjusted and design flow rates and pressures are established.

3.9 SYSTEM CHARGING

A. Charge system using the following procedures:

   1. Install core in filter-dryer after leak test but before evacuation.
   2. Evacuate entire refrigerant system with a vacuum pump to a vacuum of 500 micrometers (67 Pa). If vacuum holds for 12 hours, system is ready for charging.
   3. Break vacuum with refrigerant gas, allowing pressure to build up to 2 psig (14 kPa).
   4. Charge system with a new filter-dryer core in charging line. Provide full-operating charge.

END OF SECTION 232300

SECTION 233113 - METAL DUCTS

PART 1 - GENERAL

1.1 RELATED DOCUMENTS

A. Drawings and general provisions of the Contract, including General and Supplementary Conditions and Division 1 Specification Sections, apply to this Section.

1.2 SUMMARY

A. This Section includes metal ducts for outside, and exhaust air-distribution systems in pressure classes from minus 2- to plus 10-inch wg (minus 500 to plus 2500 Pa). Metal ducts include the following:

1. Single-wall rectangular ducts and fittings.
2. Single-wall round spiral-seam ducts and formed fittings.
3. Sheet metal materials.
4. Sealants and gaskets.
5. Hangers and supports.

B. Related Sections include the following:

1. Section 230593 "Testing, Adjusting, and Balancing for HVAC" for testing, adjusting, and balancing requirements for metal ducts.

2. Section 233300 "Air Duct Accessories" for dampers, sound-control devices, duct-mounting access doors and panels, turning vanes, and flexible ducts.

1.3 SYSTEM DESCRIPTION

A. Duct system design, as indicated, has been used to select size and type of air-moving and - distribution equipment and other air system components. Changes to layout or configuration of duct system must be specifically approved in writing by Architect. Accompany requests for layout modifications with calculations showing that proposed layout will provide original design results without increasing system total pressure.

1.4 SUBMITTALS

A. Shop Drawings: CAD-generated and drawn to 1/4 inch equals 1 foot. Show fabrication and installation details for metal ducts.

1. Fabrication, assembly, and installation, including plans, elevations, sections, components, and attachments to other work.
2. Duct layout indicating sizes and pressure classes.
3. Elevations of top and bottom of ducts.
4. Dimensions of main duct runs from building grid lines.

5. Fittings.
6. Reinforcement and spacing.
7. Seam and joint construction.
8. Penetrations through fire-rated and other partitions.
9. Equipment installation based on equipment being used on Project.
10. Duct accessories, including access doors and panels.
11. Hangers and supports, including methods for duct and building attachment, vibration isolation, and seismic restraints.

B. Coordination Drawings: Reflected ceiling plans, drawn to scale, on which the following items are shown and coordinated with each other, based on input from installers of the items involved:

1. Ceiling suspension assembly members.
2. Other systems installed in same space as ducts.
3. Ceiling- and wall-mounting access doors and panels required to provide access to dampers and other operating devices.
4. Ceiling-mounting items, including lighting fixtures, diffusers, grilles, speakers, sprinklers, access panels, and special moldings.

C. Welding certificates.

D. Field quality-control test reports.

1.5 QUALITY ASSURANCE

A. Welding: Qualify procedures and personnel according to AWS D1.1, "Structural Welding Code--Steel," for hangers and supports and AWS D9.1, "Sheet Metal Welding Code," for duct joint and seam welding.

B. NFPA Compliance:

1. NFPA 90A, "Installation of Air Conditioning and Ventilating Systems."
2. NFPA 90B, "Installation of Warm Air Heating and Air Conditioning Systems."

C. Comply with NFPA 96, "Ventilation Control and Fire Protection of Commercial Cooking Operations," Ch. 3, "Duct System," for range hood ducts, unless otherwise indicated.

PART 2 - PRODUCTS

2.1 MANUFACTURERS

A. In other Part 2 articles where titles below introduce lists, the following requirements apply to product selection:

1. Available Manufacturers: Subject to compliance with requirements, manufacturers offering products that may be incorporated into the Work include, but are not limited to, manufacturers specified.
2. Manufacturers: Subject to compliance with requirements, provide products by one of the manufacturers specified.

2.2 SINGLE-WALL RECTANGULAR DUCTS AND FITTINGS

A. General Fabrication Requirements: Comply with SMACNA's "HVAC Duct Construction Standards - Metal and Flexible" based on indicated static-pressure class unless otherwise indicated.

B. Transverse Joints: Select joint types and fabricate according to SMACNA's "HVAC Duct Construction Standards - Metal and Flexible," Figure 2-1, "Rectangular Duct/Transverse Joints," for static-pressure class, applicable sealing requirements, materials involved, duct-support intervals, and other provisions in SMACNA's "HVAC Duct Construction Standards - Metal and Flexible."

C. Longitudinal Seams: Select seam types and fabricate according to SMACNA's "HVAC Duct Construction Standards - Metal and Flexible," Figure 2-2, "Rectangular Duct/Longitudinal Seams," for static-pressure class, applicable sealing requirements, materials involved, duct-support intervals, and other provisions in SMACNA's "HVAC Duct Construction Standards - Metal and Flexible."

D. Elbows, Transitions, Offsets, Branch Connections, and Other Duct Construction: Select types and fabricate according to SMACNA's "HVAC Duct Construction Standards - Metal and Flexible," Chapter 4, "Fittings and Other Construction," for static-pressure class, applicable sealing requirements, materials involved, duct-support intervals, and other provisions in SMACNA's "HVAC Duct Construction Standards - Metal and Flexible."

2.3 SINGLE-WALL ROUND DUCTS AND FITTINGS

A. General Fabrication Requirements: Comply with SMACNA's "HVAC Duct Construction Standards - Metal and Flexible," Chapter 3, "Round, Oval, and Flexible Duct," based on indicated static-pressure class unless otherwise indicated.

B. Transverse Joints: Select joint types and fabricate according to SMACNA's "HVAC Duct Construction Standards - Metal and Flexible," Figure 3-1, "Round Duct Transverse Joints," for static-pressure class, applicable sealing requirements, materials involved, duct-support intervals, and other provisions in SMACNA's "HVAC Duct Construction Standards - Metal and Flexible."

C. Tees and Laterals: Select types and fabricate according to SMACNA's "HVAC Duct Construction Standards - Metal and Flexible," Figure 3-5, "90 Degree Tees and Laterals," and Figure 3-6, "Conical Tees," for static-pressure class, applicable sealing requirements, materials involved, duct-support intervals, and other provisions in SMACNA's "HVAC Duct Construction Standards - Metal and Flexible."

2.4 SHEET METAL MATERIALS

A. Comply with SMACNA's "HVAC Duct Construction Standards--Metal and Flexible" for acceptable materials, material thicknesses, and duct construction methods, unless otherwise indicated. Sheet metal materials shall be free of pitting, seam marks, roller marks, stains, discolorations, and other imperfections.

B. Galvanized Sheet Steel: Lock-forming quality; complying with ASTM A 653/A 653M and having G90 (Z275) coating designation; ducts shall have mill-phosphatized finish for surfaces exposed to view.

C. Carbon-Steel Sheets: ASTM A 366/A 366M, cold-rolled sheets; commercial quality; with oiled, matte finish for exposed ducts.

D. Aluminum Sheets: ASTM B 209 (ASTM B 209M), alloy 3003, temper H14; with mill finish for concealed ducts and standard, 1-side bright finish for exposed ducts.

E. Reinforcement Shapes and Plates: Galvanized-steel reinforcement where installed on galvanized sheet metal ducts.

F. Tie Rods: Galvanized steel, 1/4-inch (6-mm) minimum diameter for lengths 36 inches (900 mm) or less; 3/8-inch (10-mm) minimum diameter for lengths longer than 36 inches (900 mm).

2.5 SEALANT MATERIALS

A. Joint and Seam Sealants, General: The term "sealant" is not limited to materials of adhesive or mastic nature but includes tapes and combinations of open-weave fabric strips and mastics.

B. Joint and Seam Tape: 2 inches (50 mm) wide; glass-fiber-reinforced fabric.

C. Tape Sealing System: Woven-fiber tape impregnated with gypsum mineral compound and modified acrylic/silicone activator to react exothermically with tape to form hard, durable, airtight seal.

D. Water-Based Joint and Seam Sealant: Flexible, adhesive sealant, resistant to UV light when cured, UL 723 listed, and complying with NFPA requirements for Class 1 ducts.

E. Solvent-Based Joint and Seam Sealant: One-part, nonsag, solvent-release-curing, polymerized butyl sealant formulated with a minimum of 75 percent solids.

F. Flanged Joint Mastic: One-part, acid-curing, silicone, elastomeric joint sealant complying with ASTM C 920, Type S, Grade NS, Class 25, Use O.

G. Flange Gaskets: Butyl rubber or EPDM polymer with polyisobutylene plasticizer.

2.6 HANGERS AND SUPPORTS

A. Building Attachments: Concrete inserts, powder-actuated fasteners, or structural-steel fasteners appropriate for construction materials to which hangers are being attached.

1. Use powder-actuated concrete fasteners for standard-weight aggregate concretes or for slabs more than 4 inches (100 mm) thick.
2. Exception: Do not use powder-actuated concrete fasteners for lightweight-aggregate concretes or for slabs less than 4 inches (100 mm) thick.

B. Hanger Materials: Galvanized sheet steel or threaded steel rod.

1. Hangers Installed in Corrosive Atmospheres: Electro-galvanized, all-thread rods or galvanized rods with threads painted with zinc-chromate primer after installation.
2. Strap and Rod Sizes: Comply with SMACNA's "HVAC Duct Construction Standards--Metal and Flexible" for steel sheet width and thickness and for steel rod diameters.
3. Galvanized-steel straps attached to aluminum ducts shall have contact surfaces painted with zinc-chromate primer.

C. Duct Attachments: Sheet metal screws, blind rivets, or self-tapping metal screws; compatible with duct materials.

D. Trapeze and Riser Supports: Steel shapes complying with ASTM A 36/A 36M.

1. Supports for Galvanized-Steel Ducts: Galvanized-steel shapes and plates.
2. Supports for Stainless-Steel Ducts: Stainless-steel support materials.
3. Supports for Aluminum Ducts: Aluminum support materials unless materials are electrolytically separated from ducts.

2.7 RECTANGULAR DUCT FABRICATION

A. Fabricate ducts, elbows, transitions, offsets, branch connections, and other construction according to SMACNA's "HVAC Duct Construction Standards--Metal and Flexible" and complying with requirements for metal thickness, reinforcing types and intervals, tie-rod applications, and joint types and intervals.

1. Lengths: Fabricate rectangular ducts in lengths appropriate to reinforcement and rigidity class required for pressure class.
2. Deflection: Duct systems shall not exceed deflection limits according to SMACNA's "HVAC Duct Construction Standards--Metal and Flexible."

B. Transverse Joints: Prefabricated slide-on joints and components constructed using manufacturer's guidelines for material thickness, reinforcement size and spacing, and joint reinforcement.

1. Manufacturers:

a. Ductmate Industries, Inc.
b. Nexus Inc.
c. Ward Industries, Inc.
d. McGrill AirFlow LLC.
e. Or Approved Equal.

C. Formed-On Flanges: Construct according to SMACNA's "HVAC Duct Construction Standards--Metal and Flexible," Figure 1-4, using corner, bolt, cleat, and gasket details.

1. Manufacturers:

a. Ductmate Industries, Inc.
b. Lockformer.
c. McGrill AirFlow LLC.
d. SEMCO LLC
e. Or Approved Equal.

2. Duct Size: Maximum 30 inches (750 mm) wide and up to 2-inch wg (500-Pa) pressure class.
3. Longitudinal Seams: Pittsburgh lock sealed with non-curing polymer sealant.

D. Cross Breaking or Cross Beading: Cross break or cross bead duct sides 19 inches (480 mm) and larger and 0.0359 inch (0.9 mm) thick or less, with more than 10 sq. ft. (0.93 sq. m) of non-braced panel area unless ducts are lined.

2.8 APPLICATION OF LINER IN RECTANGULAR DUCTS

A. Adhere a single layer of indicated thickness of duct liner with at least 90 percent adhesive coverage at liner contact surface area. Attaining indicated thickness with multiple layers of duct liner is prohibited.

B. Apply adhesive to transverse edges of liner facing upstream that do not receive metal nosing.

C. Butt transverse joints without gaps and coat joint with adhesive.

D. Fold and compress liner in corners of rectangular ducts or cut and fit to ensure butted-edge overlapping.

E. Do not apply liner in rectangular ducts with longitudinal joints, except at corners of ducts, unless duct size and standard liner product dimensions make longitudinal joints necessary.

F. Apply adhesive coating on longitudinal seams in ducts with air velocity of 2500 fpm (12.7 m/s).

G. Secure liner with mechanical fasteners 4 inches (100 mm) from corners and at intervals not exceeding 12 inches (300 mm) transversely; at 3 inches (75 mm) from transverse joints and at intervals not exceeding 18 inches (450 mm) longitudinally.

H. Secure transversely oriented liner edges facing the airstream with metal nosings that have either channel or "Z" profiles or are integrally formed from duct wall. Fabricate edge facings at the following locations:

1. Fan discharges.
2. Intervals of lined duct preceding unlined duct.
3. Upstream edges of transverse joints in ducts where air velocities are greater than 2500 fpm (12.7 m/s) or where indicated.

I. Terminate inner ducts with build outs attached to fire-damper sleeves, dampers, turning vane assemblies, or other devices. Fabricated build outs (metal hat sections) or other build out means are optional; when used, secure build outs to duct walls with bolts, screws, rivets, or welds.

2.9 ROUND DUCT AND FITTING FABRICATION (WHERE INDICATED ON DRAWINGS)

A. Round, Longitudinal- and Spiral Lock-Seam Ducts: Fabricate exhaust air ducts of aluminum according to SMACNA's "HVAC Duct Construction Standards--Metal and Flexible."

1. Manufacturers:

a. McGill AirFlow Corporation.
b. SEMCO Incorporated.
c. Ductmate Industries, Inc.
d. Spiral Manufacturing Co.

B. Duct Joints:

1. Ducts up to 20 Inches (500 mm) in Diameter: Interior, center-beaded slip coupling, sealed before and after fastening, attached with sheet metal screws.

a. Manufacturers:

1) Ductmate Industries, Inc.
2) Lindab Inc.
3) SEMCO Incorporated.
4) McGill AirFlow Corporation.

C. 90-Degree Tees and Laterals and Conical Tees: Fabricate to comply with SMACNA's "HVAC Duct Construction Standards--Metal and Flexible," with metal thicknesses specified for longitudinal-seam straight ducts.

D. Diverging-Flow Fittings: Fabricate with reduced entrance to branch taps and with no excess material projecting from fitting onto branch tap entrance.

E. Fabricate elbows using die-formed, gored, pleated, or mitered construction. Bend radius of die-formed, gored, and pleated elbows shall be 1-1/2 times duct diameter. Unless elbow construction type is indicated, fabricate elbows as follows:

1. Mitered-Elbow Radius and Number of Pieces: Welded construction complying with SMACNA's "HVAC Duct Construction Standards--Metal and Flexible," unless otherwise indicated.
2. Round Mitered Elbows: Welded construction with the following metal thickness for pressure classes from minus 2- to plus 2-inch wg (minus 500 to plus 500 Pa):

a. Ducts 3 to 36 Inches (75 to 915 mm) in Diameter: 0.034 inch (0.85 mm).

3. Round Mitered Elbows: Welded construction with the following metal thickness for pressure classes from 2- to 10-inch wg (500 to 2500 Pa):

a. Ducts 3 to 26 Inches (75 to 660 mm) in Diameter: 0.034 inch (0.85 mm).

4. Round Elbows 8 Inches (200 mm) and Less in Diameter: Fabricate die-formed elbows for 45- and 90-degree elbows and pleated elbows for 30, 45, 60, and 90 degrees only. Fabricate nonstandard bend-angle configurations or nonstandard diameter elbows with gored construction.

5. Round Elbows 9 through 14 Inches (225 through 355 mm) in Diameter: Fabricate gored or pleated elbows for 30, 45, 60, and 90 degrees unless space restrictions require mitered elbows. Fabricate nonstandard bend-angle configurations or nonstandard diameter elbows with gored construction.

6. Die-Formed Elbows for Sizes through 8 Inches (200 mm) in Diameter and All Pressures 0.040 inch (1.0 mm) thick with 2-piece welded construction.

7. Round Gored-Elbow Metal Thickness: Same as non-elbow fittings specified above.

8. Pleated Elbows for Sizes through 14 Inches (355 mm) in Diameter and Pressures through 10-Inch wg (2500 Pa): 0.022 inch (0.55 mm).

PART 3 - EXECUTION

3.1 DUCT APPLICATIONS

A. Static-Pressure Classes: Unless otherwise indicated, construct ducts according to the following:

1. Exhaust Ducts (Negative Pressure): 2-inch wg.

B. All ducts shall be galvanized steel except exhaust air duct for chemical fume hood shall be aluminum construction or as indicated on the drawings.

3.2 DUCT INSTALLATION

A. Construct and install ducts according to SMACNA's "HVAC Duct Construction Standards--Metal and Flexible," unless otherwise indicated.

B. Install round ducts in lengths not less than 12 feet (3.7 m) unless interrupted by fittings.

C. Install ducts with fewest possible joints.

D. Install fabricated fittings for changes in directions, size, and shape and for connections.

E. Install couplings tight to duct wall surface with a minimum of projections into duct. Secure couplings with sheet metal screws. Install screws at intervals of 12 inches (300 mm), with a minimum of 3 screws in each coupling.

F. Install ducts, unless otherwise indicated, vertically and horizontally and parallel and perpendicular to building lines; avoid diagonal runs.

G. Install ducts close to walls, overhead construction, columns, and other structural and permanent enclosure elements of building.

H. Install ducts with a clearance of 1 inch (25 mm), plus allowance for insulation thickness.

I. Conceal ducts from view in finished spaces. Do not encase horizontal runs in solid partitions unless specifically indicated.

J. Coordinate layout with suspended ceiling, fire- and smoke-control dampers, lighting layouts, and similar finished work.

K. Seal all joints and seams. Apply sealant to male end connectors before insertion, and afterward to cover entire joint and sheet metal screws.

L. Electrical Equipment Spaces: Route ducts to avoid passing through transformer vaults and electrical equipment spaces and enclosures.

M. Non-Fire-Rated Partition Penetrations: Where ducts pass through interior partitions and exterior walls and are exposed to view, conceal spaces between construction openings and ducts or duct insulation with sheet metal flanges of same metal thickness as ducts. Overlap openings on 4 sides by at least 1-1/2 inches (38 mm).

N. Fire-Rated Partition Penetrations: Where ducts pass through interior partitions and exterior walls, install appropriately rated fire dampers, sleeves, and firestopping sealant. Fire and smoke dampers are specified in Division 23 Section "Duct Accessories." Firestopping materials and installation methods are specified in Division 7 Section "Through-Penetration Firestop Systems."

O. Install ducts with hangers and braces designed to withstand, without damage to equipment, seismic force required by applicable building codes. Refer to SMACNA's "Seismic Restraint Manual: Guidelines for Mechanical Systems."

P. Protect duct interiors from the elements and foreign materials until building is enclosed. Follow SMACNA's "Duct Cleanliness for New Construction."

Q. Paint interiors of metal ducts, that do not have duct liner, for 24 inches (600 mm) upstream of registers and grilles. Apply one coat of flat, black, latex finish coat over a compatible galvanized-steel primer. Paint materials and application requirements are specified in Division 9 painting Sections.

3.3 SEAM AND JOINT SEALING

A. Seal duct seams and joints according to SMACNA's "HVAC Duct Construction Standards--Metal and Flexible" for duct pressure class indicated.

1. For pressure classes lower than 2-inch wg (500 Pa), seal transverse joints.

B. Seal ducts before external insulation is applied.

3.4 HANGING AND SUPPORTING

A. Support horizontal ducts within 24 inches (600 mm) of each elbow and within 48 inches (1200 mm) of each branch intersection.

B. Support vertical ducts at maximum intervals of 16 feet (5 m) and at each floor.

C. Install upper attachments to structures with an allowable load not exceeding one-fourth of failure (proof-test) load.

D. Install concrete inserts before placing concrete.

E. Install powder-actuated concrete fasteners after concrete is placed and completely cured.

1. Do not use powder-actuated concrete fasteners for lightweight-aggregate concretes or for slabs less than 4 inches (100 mm) thick.

3.5 CONNECTIONS

A. Make connections to equipment with flexible connectors according to Division 23 Section "Duct Accessories."

B. Comply with SMACNA's "HVAC Duct Construction Standards--Metal and Flexible" for branch, outlet and inlet, and terminal unit connections.

3.6 FIELD QUALITY CONTROL

A. Perform the following field tests and inspections according to SMACNA's "HVAC Air Duct Leakage Test Manual" and prepare test reports:

1. Disassemble, reassemble, and seal segments of systems to accommodate leakage testing and for compliance with test requirements.
2. Conduct tests at static pressures equal to maximum design pressure of system or section being tested. If pressure classes are not indicated, test entire system at maximum system design pressure. Do not pressurize systems above maximum design operating pressure. Give seven days' advance notice for testing.
3. Maximum Allowable Leakage: Comply with requirements for Leakage Class 3 for round ducts, Leakage Class 12 for rectangular ducts in pressure classes lower than and equal to 2-inch wg (500 Pa) (both positive and negative pressures), and Leakage Class 6 for pressure classes from 2- to 10-inch wg (500 to 2500 Pa).
4. Remake leaking joints and retest until leakage is equal to or less than maximum allowable.

3.7 CLEANING NEW SYSTEMS

A. Mark position of dampers and air-directional mechanical devices before cleaning, and perform cleaning before air balancing.

B. Use service openings, as required, for physical and mechanical entry and for inspection.

1. Create other openings to comply with duct standards.
2. Disconnect flexible ducts as needed for cleaning and inspection.
3. Remove and reinstall ceiling sections to gain access during the cleaning process.

C. Vent vacuuming system to the outside. Include filtration to contain debris removed from HVAC systems, and locate exhaust down wind and away from air intakes and other points of entry into building.

D. Mechanical Cleaning Methodology:

1. Clean metal duct systems using mechanical cleaning methods that extract contaminants from within duct systems and remove contaminants from building.

2. Use vacuum-collection devices that are operated continuously during cleaning. Connect vacuum device to downstream end of duct sections so areas being cleaned are under negative pressure.
3. Use mechanical agitation to dislodge debris adhered to interior duct surfaces without damaging integrity of metal ducts or duct accessories.

E. Cleanliness Verification:

1. Visually inspect metal ducts for contaminants.
2. Where contaminants are discovered, re-clean and reinspect ducts.

END OF SECTION 233113

SECTION 233116 - NONMETAL DUCTS

PART 1 - GENERAL

1.1 DESCRIPTION OF WORK

A. Extent of non-metal ductwork is indicated on drawings and by requirements of this section.

B. Types of non-metal ductwork required for this project include the following:

1. Textile Air Dispersion Products.

1.2 QUALITY ASSURANCE

A. Building Codes and Standards

1. Product must be Classified by Underwriter's Laboratories in accordance with the 25/50 flame spread / smoke developed requirements of NFPA 90-A and UL 2518.
2. All product sections must be labeled with the logo and classification marking of Underwriter's Laboratories.

B. Design and Quality Control

1. Manufacturer must have documented design support information including duct sizing; vent, orifice, and/or nozzle location; vent, orifice, and/or nozzle sizing; length; and suspension. Parameters for design, including maximum air temperature, velocity, pressure and textile permeability, shall be considered and documented.

2. Manufacturer's Environmental Product Declaration (EPD) must be inclusive of the following:
    a. Fabric
    b. Cutting, sewing, processing of DuctSox
    c. Zippers
    d. Metal suspension system parts and framework (if applicable)
    e. Energy, water, recycled & waste of plant processing fabric & suspension
    f. Complete packaging including boxes, bags & staples
    g. Transportation

1.3 SUBMITTALS

A. Product Data: Submit manufacturer's specifications on materials and manufactured products used for work of this section.
B. Building Code Data: Submit UL file number under which product is Classified by Underwriter's Laboratories for both NFPA 90-A and UL 2518.
C. Provide detailed drawings confirming configuration of Textile Dispersion System (diameter, lengths, airflow, pressure, and textile permeability).
D. Provide detailed installation instructions for components to be installed.
E. Provide warranty and maintenance documentation.
F. Provide product's Environmental Product Declaration (EPD) that includes the following:
    1. Fabric
    2. Cutting, sewing, processing of DuctSox
    3. Zippers
    4. Metal suspension system parts and framework (if applicable)
    5. Energy, water, recycled & waste of plant processing fabric & suspension
    6. Complete packaging including boxes, bags & staples
    7. Transportation

1.4 WARRANTY

A. Manufacturer must provide a 10 Year Product Warranty for products supplied for the fabric portion of this system as well as a Design and Performance Warranty.

1.5 DELIVERY, STORAGE AND HANDLING

A. Protect textile air dispersion system and Hoops (IHS) components from damage during shipping, storage, and handling.

B. Where possible, store products inside and protect from weather. Where necessary to store outside, store above grade and enclose with a vented waterproof wrapping.

PART 2 - PRODUCTS

2.1 MANUFACTURER

A. DuctSox® Corporation
Phone: (866) DUCTSOX or (563) 588-5300
FAX: (866) 398-1646 or (563) 588-5330
www.DuctSox.com

2.2 TEXTILE AIR DISPERSION SYSTEM:

A. 1, 2, & 3 Row Suspension: Air diffusers shall be constructed with one, two, or three row suspension system.(Select only those options that apply)
   1. Tension Cable
      a. One Row Cable
         1. Systems shall be installed 1-1/2” above top-dead-center. Textile system attachment to cable shall be made using Gliders spaced every 24 inches. Available for systems less than 32” diameter. Cable suspension hardware to include cable, eye bolts, thimbles, cable clamps, and turnbuckle(s) as required.
            a. Cable suspension options(must specify if multiple on same project)
               i. Galvanized steel cable
               ii. Stainless steel cable
               iii. Impregnated steel cable(required for natatorium applications)
            b. Support lengths available in 5’(standard), 10’, 15’, & 30’.
      b. Two Row Cable
         1. Systems shall be installed 1-1/2” above the 10 and 2 o’clock locations. Textile system attachment to cable shall be made using Gliders spaced every 24 inches. Required for systems of 32” – 59” diameter. Available for systems less than 32” diameter. Cable suspension hardware to include cable, eye bolts, thimbles, cable clamps, and turnbuckle(s) as required.
            a. Cable suspension options(must specify if multiple on same project)
               i. Galvanized steel cable
               ii. Stainless steel cable
               iii. Impregnated steel cable(required for natatorium applications)
            b. Support lengths available in 5’(standard), 10’, 15’, & 30’.
      c. Three Row Cable
         1. Systems shall be installed 1-1/2” above the 10, 12, and 2 o’clock locations. Textile system attachment to cable shall be made using Gliders spaced every 24 inches. Required for systems of 60” diameter

and larger. Available for systems less than 60” diameter. Cable suspension hardware to include cable, eye bolts, thimbles, cable clamps, and turnbuckle(s) as required.

a. Cable suspension options(must specify if multiple on same project)
    i. Galvanized steel cable
    ii. Stainless steel cable
    iii. Impregnated steel cable(required for natatorium applications)
b. Support lengths available in 5’(standard), 10’, 15’, & 30’.

2. U-Track
    a. One Row U-Track
        1. Systems shall be installed 1-1/2” above top-dead-center. Textile system attachment to cable shall be made using Gliders spaced every 24 inches. Available for systems less than 32” diameter. U-Track suspension hardware to include 8’ sections of aluminum track, aluminum splice connectors, track endcaps and vertical cable support kits – consisting of a length of cable with cable connectors. Radius aluminum track must be included for all horizontal/flat radius sections.
            a. U-Track suspension options(must specify if multiple on same project)
                i. Galvanized steel cable
                ii. Stainless steel cable
                iii. Impregnated steel cable(required for natatorium applications)
            b. Support lengths available in 5’(standard), 10’, 15’, & 30’.
    b. Two Row U-Track
        1. Systems shall be installed 1-1/2” above the 10 and 2 o’clock locations. Textile system attachment to cable shall be made using Gliders spaced every 24 inches. Required for systems of 32” – 59” diameter. Available for systems less than 32” diameter. U-Track suspension hardware to include 8’ sections of aluminum track, aluminum splice connectors, track endcaps and vertical cable support kits – consisting of a length of cable with cable connectors. Radius aluminum track must be included for all horizontal/flat radius sections.
            a. U-Track suspension options(must specify if multiple on same project)
                i. Galvanized steel cable
                ii. Stainless steel cable
                iii. Impregnated steel cable(required for natatorium applications)
            b. Support lengths available in 5’(standard), 10’, 15’, & 30’.
    c. Three Row U-Track
        1. Systems shall be installed 1-1/2” above the 10, 12, and 2 o’clock locations. Textile system attachment to cable shall be made using Gliders spaced every 24 inches. Required for systems of 60” diameter and larger. Available for systems less than 60” diameter. U-Track suspension hardware to include 8’ sections of aluminum track, aluminum splice connectors, track endcaps and vertical cable support kits – consisting of a length of cable with cable connectors. Radius aluminum track must be included for all horizontal/flat radius sections.
            a. U-Track suspension options(must specify if multiple on same project)
                i. Galvanized steel cable
                ii. Stainless steel cable

iii. Impregnated steel cable(required for natatorium applications)

b. Support lengths available in 5'(standard), 10', 15', & 30'.

B. TEXTILE

1. Verona NP
   a. Textile Construction: Filament/spun plain weave polyester, fire retardant in accordance with UL 2518. Also Classified by UL-C (Canada) S102.2 and AS/NZS 1530.3.
   b. Air Permeability: 0.7 (+/-0.25) CFM/ft^2 per ASTM D737, Frazier
      1. The air permeability of the fabric must NOT be created by perforating the fabric.
      2. The air permeability must be confirmed by third party testing to eliminate the formation of condensate on the fabric.
   c. Weight: 6.5 oz. /yd^2 per ASTM D3776
   d. Warranty: 10 years
2. Textile Color
   a. Standard: blue, white, tan, red, green, silver, black
   b. Custom

C. TEXTILE SYSTEM FABRICATION REQUIREMENTS:

1. Textile system to be constructed in modular lengths (zippered).
2. Integrated air dispersion shall be specified and approved by manufacturer. (select only those that apply)
   a. Linear Vents
      1. Air dispersion accomplished by linear vent and permeable fabric. Linear vents must be sized in 1 CFM per linear foot increments (based on .5" SP), starting a 1 CFM through 90 CFM per linear foot. Linear vent is to consist of an array of open orifices rather than a mesh style vent to reduce maintenance requirements of mesh style vents. Linear vents should also be designed to minimize dusting on fabric surface.
      2. Size of vent openings and location of linear vents to be specified and approved by manufacturer.
   b. Orifices
      1. Air dispersion and extended throws are accomplished by reinforced orifices and permeable fabric. Reinforced laser-cut orifices retain the integrity of the opening and withstand laundry processes.
      2. Diameter, quantity, and location of reinforced orifices to be specified and approved by manufacturer.
   c. Fixed Nozzles
      1. Air dispersion accomplished by using conical aerodynamic nozzles and permeable fabric. Diameter of nozzles height to be minimum ½". Due to exact requirements of throw and maximum level of noise alternative flow models are not acceptable.
      2. Color of nozzles must match color of fabric. Unless otherwise specifically mentioned on drawings or otherwise in this specification, suppliers standard table is used for selection of color.
      3. Location and number of nozzles to be specified and approved by manufacturer.
   d. Adjustable Nozzles
      1. Air dispersion accomplished by adjustable ball nozzles and permeable fabric. Adjustable ball nozzles to have multiaxial rotation to redirect airflow to desired area. Adjustable ball nozzles are able to completely close off airflow without adding caps or plugs. Adjustable ball nozzles should lock into place once set, preventing constant adjustment.

Adjustable ball nozzle should have inset design to be a condensation resistant product.

2. Colors of adjustable nozzles available are white and black. With white material receiving white adjustable nozzles and all other material colors receiving black adjustable nozzles unless otherwise specifically mentioned on drawings or otherwise in the specification.
3. Quantity and location of adjustable ball nozzles to be specified and approved by manufacturer.

3. Inlet connection to metal duct via fabric draw band with anchor patches as supplied by manufacturer. Anchor patches to be secured to metal duct via. zip screw fastener – supplied by contractor.
4. Inlet connection includes zipper for easy removal / maintenance.
5. Lengths to include required intermediate zippers as specified by manufacturer.
6. System to include Adjustable Flow Devices to balance turbulence, airflow and distribution as needed. Flow restriction device shall include ability to adjust the airflow resistance from 0.06 – 0.60 in w.g. static pressure.
7. End cap includes zipper for easy maintenance.
8. Each section of the textile shall include identification labels documenting order number, section diameter, section length, piece number, code certifications and other pertinent information.

D. DESIGN PARAMETERS:
1. Textile air diffusers shall be designed from 0.25” water gage minimum to 3.1” maximum, with 0.5” as the standard.
2. Textile air diffusers shall be limited to design temperatures between 0 degrees F and 180 degrees F (-17.8 degrees C and 82 degrees C).
3. System overall design; diameter, length, airflow, operating static pressure and dispersion shall be designed or approved by the manufacturer.
4. Do not use textile diffusers in concealed locations.
5. Use textile air dispersion systems only for positive pressure air distribution components of the mechanical ventilation system.

PART 3 - INSTALLATION

3.1 INSTALLATION OF TEXTILE AIR DISPERSION SYSTEM:
A. Install chosen suspension system in accordance with the requirements of the manufacturer. Instructions for installation shall be provided by the manufacturer with product.

3.2 CLEANING AND PROTECTION:
A. Clean air handling unit and ductwork prior to the DuctSox system unit-by-unit as it is installed. Clean external surfaces of foreign substance which may cause corrosive deterioration of facing.
B. Temporary Closure: At ends of ducts which are not connected to equipment or distribution devices at time of ductwork installation, cover with polyethylene film or other covering which will keep the system clean until installation is completed.
C. If DuctSox systems become soiled during installation, they should be removed and cleaned following the manufacturers standard terms of laundry.

END OF SECTION 233116

SECTION 233300 - AIR DUCT ACCESSORIES

PART 1 - GENERAL

1.1 RELATED DOCUMENTS

A. Drawings and general provisions of the Contract, including General and Supplementary Conditions and Division 01 Specification Sections, apply to this Section.

1.2 SUMMARY

A. Section Includes:

1. Manual volume dampers.
2. Control dampers.
3. Flange connectors.
4. Turning vanes.
5. Flexible connectors.
6. Flexible ducts.

1.3 ACTION SUBMITTALS

A. Shop Drawings: For duct accessories. Include plans, elevations, sections, details and attachments to other work.

1. Detail duct accessories fabrication and installation in ducts and other construction. Include dimensions, weights, loads, and required clearances; and method of field assembly into duct systems and other construction. Include the following:

a. Special fittings.
b. Manual volume damper installations.
c. Control-damper installations.

1.4 INFORMATIONAL SUBMITTALS

A. Coordination Drawings: Reflected ceiling plans, drawn to scale, on which ceiling-mounted access panels and access doors required for access to duct accessories are shown and coordinated with each other, using input from Installers of the items involved.

B. Source quality-control reports.

1.5 CLOSEOUT SUBMITTALS

A. Operation and Maintenance Data: For air duct accessories to include in operation and maintenance manuals.

PART 2 - PRODUCTS

2.1 ASSEMBLY DESCRIPTION

A. Comply with NFPA 90A, "Installation of Air Conditioning and Ventilating Systems," and with NFPA 90B, "Installation of Warm Air Heating and Air Conditioning Systems."

B. Comply with SMACNA's "HVAC Duct Construction Standards - Metal and Flexible" for acceptable materials, material thicknesses, and duct construction methods unless otherwise indicated. Sheet metal materials shall be free of pitting, seam marks, roller marks, stains, discolorations, and other imperfections.

2.2 MATERIALS

A. Galvanized Sheet Steel: Comply with ASTM A 653/A 653M.

1. Galvanized Coating Designation: G90 (Z275).

B. Reinforcement Shapes and Plates: Galvanized-steel reinforcement where installed on galvanized sheet metal ducts; compatible materials for aluminum and stainless-steel ducts.

C. Tie Rods: Galvanized steel, 1/4-inch (6-mm) minimum diameter for lengths 36 inches (900 mm) or less; 3/8-inch (10-mm) minimum diameter for lengths longer than 36 inches (900 mm).

2.3 MANUAL VOLUME DAMPERS

A. Standard, Steel, Manual Volume Dampers:
1. Standard leakage rating, with linkage outside airstream.
2. Suitable for horizontal or vertical applications.
3. Frames:

a. Frame: Hat-shaped, 0.094-inch- (2.4-mm-) thick, galvanized sheet steel.
b. Mitered and welded corners.
c. Flanges for attaching to walls and flangeless frames for installing in ducts.

4. Blades:

a. Multiple or single blade.
b. Parallel- or opposed-blade design.
c. Stiffen damper blades for stability.
d. Galvanized-steel, 0.064 inch (1.62 mm) thick.

5. Blade Axles: Galvanized steel.
6. Bearings:

a. Oil-impregnated bronze.
b. Dampers in ducts with pressure classes of 3-inch wg (750 Pa) or less shall have axles full length of damper blades and bearings at both ends of operating shaft.

7. Tie Bars and Brackets: Galvanized steel.

B. Low-Leakage, Steel, Manual Volume Dampers:
   1. Comply with AMCA 500-D testing for damper rating.
   2. Low-leakage rating with linkage outside airstream and bearing AMCA's Certified Ratings Seal for both air performance and air leakage.
   3. Suitable for horizontal or vertical applications.
   4. Frames:
      a. Angle shaped.
      b. 0.094-inch- (2.4-mm-) thick, galvanized sheet steel.
      c. Mitered and welded corners.
      d. Flanges for attaching to walls and flangeless frames for installing in ducts.
   5. Blades:
      a. Multiple or single blade.
      b. Parallel- or opposed-blade design.
      c. Stiffen damper blades for stability.
      d. Galvanized, roll-formed steel, 0.064 inch (1.62 mm) thick.
   6. Blade Axles: Galvanized steel.
   7. Bearings:
      a. Oil-impregnated bronze.
      b. Dampers in ducts with pressure classes of 3-inch wg (750 Pa) or less shall have axles full length of damper blades and bearings at both ends of operating shaft.
   8. Blade Seals: Neoprene.
   9. Jamb Seals: Cambered aluminum.
   10. Tie Bars and Brackets: Galvanized steel.
   11. Accessories:
      a. Include locking device to hold single-blade dampers in a fixed position without vibration.

2.4 FIRE DAMPERS

A. Type: Static; rated and labeled according to UL 555 by an NRTL.

B. Closing rating in ducts up to 4-inch wg (1-kPa) static pressure class and minimum 2000-fpm (10-m/s) velocity.

C. Fire Rating: 1-1/2 hours.

D. Frame: Curtain type with blades outside airstream; fabricated with roll-formed, 0.034-inch- (0.85-mm-) thick galvanized steel; with mitered and interlocking corners.

E. Mounting Sleeve: Factory- or field-installed, galvanized sheet steel.
   1. Minimum Thickness: 0.39 inch (9.9 mm) thick, as indicated, and of length to suit application.

2. Exception: Omit sleeve where damper-frame width permits direct attachment of perimeter mounting angles on each side of wall or floor; thickness of damper frame must comply with sleeve requirements.

F. Mounting Orientation: Vertical or horizontal as indicated.

G. Blades: Roll-formed, interlocking, 0.034-inch- (0.85-mm-) thick, galvanized sheet steel. In place of interlocking blades, use full-length, 0.034-inch- (0.85-mm-) thick, galvanized-steel blade connectors.

H. Horizontal Dampers: Include blade lock and stainless-steel closure spring.

I. Heat-Responsive Device: Replaceable, 165 deg F (74 deg C) rated, fusible links.

2.5 TURNING VANES

A. Basis-of-Design Product: Subject to compliance with requirements, provide the product indicated on the drawings or approved equal:

1. Ductmate Industries, Inc.
2. Duro Dyne Inc.
3. Ward Industries
4. Or Approved Equal

B. Manufactured Turning Vanes for Metal Ducts: Curved blades of galvanized sheet steel; support with bars perpendicular to blades set; set into vane runners suitable for duct mounting.

1. Acoustic Turning Vanes: Fabricate airfoil-shaped aluminum extrusions with perforated faces and fibrous-glass fill.

C. Manufactured Turning Vanes for Nonmetal Ducts: Fabricate curved blades of resin-bonded fiberglass with acrylic polymer coating; support with bars perpendicular to blades set; set into vane runners suitable for duct mounting.

D. General Requirements: Comply with SMACNA's "HVAC Duct Construction Standards - Metal and Flexible"; Figures 4-3, "Vanes and Vane Runners," and 4-4, "Vane Support in Elbows."

E. Vane Construction: Single wall for ducts up to 48 inches (1200 mm) wide and double wall for larger dimensions.

2.6 FLANGE CONNECTORS

A. Description: roll-formed, factory-fabricated, slide-on transverse flange connectors, gaskets, and components.

B. Material: Galvanized steel.

C. Gage and Shape: Match connecting ductwork.

2.7 FLEXIBLE CONNECTORS

A. Materials: Flame-retardant or noncombustible fabrics.

B. Coatings and Adhesives: Comply with UL 181, Class 1.

C. Metal-Edged Connectors: Factory fabricated with a fabric strip 5-3/4 inches wide attached to two strips of 2-3/4-inch- (70-mm-) wide, 0.028-inch- (0.7-mm-) thick, galvanized sheet steel or 0.032-inch- (0.8-mm-) thick aluminum sheets. Provide metal compatible with connected ducts.

D. Indoor System, Flexible Connector Fabric: Glass fabric double coated with neoprene.

1. Minimum Weight: 26 oz./sq. yd. (880 g/sq. m).
2. Tensile Strength: 480 lbf/inch (84 N/mm) in the warp and 360 lbf/inch (63 N/mm) in the filling.
3. Service Temperature: Minus 40 to plus 200 deg F (Minus 40 to plus 93 deg C).

2.8 FLEXIBLE DUCTS

A. Insulated, Flexible Duct: UL 181, Class 1, 2-ply vinyl film supported by helically wound, spring-steel wire; fibrous-glass insulation; aluminized vapor-barrier film.

1. Pressure Rating: 10-inch wg (2500 Pa) positive and 1.0-inch wg (250 Pa) negative.
2. Maximum Air Velocity: 4000 fpm (20 m/s).
3. Temperature Range: Minus 10 to plus 160 deg F (Minus 23 to plus 71 deg C).
4. Insulation R-value: 4.2.

B. Flexible Duct Connectors:

1. Clamps: Nylon strap in sizes 3 through 18 inches (75 through 460 mm), to suit duct size.

PART 3 - EXECUTION

3.1 INSTALLATION

A. Install duct accessories according to applicable details in SMACNA's "HVAC Duct Construction Standards - Metal and Flexible" for metal ducts and in NAIMA AH116, "Fibrous Glass Duct Construction Standards," for fibrous-glass ducts.

B. Install duct accessories of materials suited to duct materials; use galvanized-steel accessories in galvanized-steel and fibrous-glass ducts, stainless-steel accessories in stainless-steel ducts, and aluminum accessories in aluminum ducts.

C. Install volume dampers at points on supply and return systems where branches extend from larger ducts. Where dampers are installed in ducts having duct liner, install dampers with hat channels of same depth as liner, and terminate liner with nosing at hat channel.

1. Install steel volume dampers in steel ducts.

2. Install aluminum volume dampers in aluminum ducts.

D. Set dampers to fully open position before testing, adjusting, and balancing.

E. Install test holes at fan inlets and outlets and elsewhere as indicated.

F. Install fire dampers according to UL listing.

G. Install flexible connectors to connect ducts to equipment.

H. Connect terminal units to supply ducts with maximum 6-inch lengths of flexible duct. Do not use flexible ducts to change directions.

I. Connect flexible ducts to metal ducts with [adhesive plus sheet metal screws.

J. Install duct test holes where required for testing and balancing purposes.

K. Install thrust limits at centerline of thrust, symmetrical on both sides of equipment. Attach thrust limits at centerline of thrust and adjust to a maximum of 1/4-inch (6-mm) movement during start and stop of fans.

3.2 FIELD QUALITY CONTROL

A. Tests and Inspections:

1. Operate dampers to verify full range of movement.
2. Inspect locations of access doors and verify that purpose of access door can be performed.
3. Operate remote damper operators to verify full range of movement of operator and damper.

END OF SECTION 233300

SECTION 233416 - CENTRIFUGAL HVAC FANS

PART 1 - GENERAL

1.1 RELATED DOCUMENTS

A. Drawings and general provisions of the Contract, including General and Supplementary Conditions and Division 01 Specification Sections, apply to this Section.

1.2 SUMMARY

A. Section Includes: For each product.

1. Backward-inclined centrifugal fans.

1.3 ACTION SUBMITTALS

A. Product Data:

1. Include rated capacities, furnished specialties, and accessories for each fan.
2. Certified fan performance curves with system operating conditions indicated.
3. Certified fan sound-power ratings.
4. Motor ratings and electrical characteristics, plus motor and electrical accessories.
5. Material thickness and finishes, including color charts.
6. Dampers, including housings, linkages, and operators.

B. Shop Drawings:

1. Include plans, elevations, sections, and attachment details.
2. Include details of equipment assemblies. Indicate dimensions, weights, loads, required clearances, method of field assembly, components, and location and size of each field connection.
3. Include diagrams for power, signal, and control wiring.
4. Design Calculations: Calculate requirements for selecting vibration isolators and seismic restraints and for designing vibration isolation bases.
5. Vibration Isolation Base Details: Detail fabrication, including anchorages and attachments to structure and to supported equipment. Include auxiliary motor slides and rails, and base weights.

1.4 INFORMATIONAL SUBMITTALS

A. Coordination Drawings: Show fan room layout and relationships between components and adjacent structural and mechanical elements. Show support locations, type of support, and weight on each support. Indicate and certify field measurements.

B. Field quality-control reports.

1.5 CLOSEOUT SUBMITTALS

A. Operation and Maintenance Data: For centrifugal fans to include in emergency, operation, and maintenance manuals.

1.6 MAINTENANCE MATERIAL SUBMITTALS

A. Belts: One set(s) for each belt-driven unit.

PART 2 - PRODUCTS

2.1 PERFORMANCE REQUIREMENTS

A. AMCA Compliance:

1. Comply with AMCA performance requirements and bear the AMCA-Certified Ratings Seal.
2. Operating Limits: Classify according to AMCA 99.

B. Electrical Components, Devices, and Accessories: Listed and labeled as defined in NFPA 70, by a qualified testing agency, and marked for intended location and application.

C. Capacities and Characteristics:

1. Refer to schedules for information.

2.2 BACKWARD-INCLINED CENTRIFUGAL FANS

A. Available Manufacturers: Subject to compliance with requirements, manufacturers offering products that may be incorporated into the Work include, but are not limited to, the following:

1. Manufacturers: Subject to compliance with requirements, provide products by one of the following:
2. Basis-of-Design Product: Subject to compliance with requirements, provide the product indicated on Drawings
   a. Greenheck
   b. Cook
   c. Penn Barry
   d. Approved Equal
3. Description:
   a. Factory-fabricated, -assembled, -tested, and -finished, belt-driven centrifugal fans consisting of housing, wheel, fan shaft, bearings, motor, drive assembly, and support structure.
   b. Deliver fans as factory-assembled units, to the extent allowable by shipping limitations.
   c. Factory-installed and -wired disconnect switch.
4. Housings:
   a. Formed panels to make curved-scroll housings with shaped cutoff.
   b. Panel Bracing: Steel angle- or channel-iron member supports for mounting and supporting fan scroll, wheel, motor, and accessories.
   c. Split housings in first subparagraph below are an optional configuration.
   d. Horizontally split, bolted-flange housing.
   e. Spun inlet cone with flange.
   f. Outlet flange.
5. Backward-Inclined Wheels:
   a. Single-width-single-inlet and double-width-double-inlet construction with curved inlet flange, backplate, backward-inclined blades, and fastened to shaft with set screws.

b. Welded or riveted to flange and backplate; cast-iron or cast-steel hub riveted to backplate.

6. Shafts:
   a. Statically and dynamically balanced and selected for continuous operation at maximum rated fan speed and motor horsepower, with adjustable alignment and belt tensioning.
   b. Turned, ground, and polished hot-rolled steel with keyway. Ship with protective coating of lubricating oil.
   c. Designed to operate at no more than 70 percent of first critical speed at top of fan's speed range.
7. Pre-lubricated and Sealed Shaft Bearings:
   a. Self-aligning, pillow-block-type ball bearings.
   b. Ball-Bearing Rating Life: ABMA 9, Ll0 at 50,000 hours
   c. Roller-Bearing Rating Life: ABMA 11, Ll0 at 50,000 hours.
8. Grease-Lubricated Shaft Bearings:
   a. Self-aligning, pillow-block-type, tapered roller bearings with double-locking collars and two-piece, cast-iron housing.
   b. Ball-Bearing Rating Life: ABMA 9, Ll0 at 50,000 hours.
   c. Roller-Bearing Rating Life: ABMA 11, Ll0 at 50,000 hours.
9. Grease-Lubricated Shaft Bearings:
   a. Self-aligning, pillow-block-type, ball or roller bearings with adapter mount and two-piece, cast-iron housing.
   b. Ball-Bearing Rating Life: ABMA 9, Ll0 at 50,000 hours.
   c. Roller-Bearing Rating Life: ABMA 11, Ll0 at 50,000 hours.
10. Belt Drives:
    a. Factory mounted, with adjustable alignment and belt tensioning.
    b. Service Factor Based on Fan Motor Size.
    c. Fan Pulleys: Cast iron or cast steel with split, tapered bushing; dynamically balanced at factory.
    d. Motor Pulleys: Adjustable pitch for use with motors through 5 hp; fixed pitch for use with larger motors. Select pulley so pitch adjustment is at the middle of adjustment range at fan design conditions.
    e. Belts: Oil resistant, nonsparking, and nonstatic; matched sets for multiple belt drives.
    f. Belt Guards: Fabricate to comply with OSHA and SMACNA requirements of diamond-mesh wire screen welded to steel angle frame or equivalent, prime coated. Secure to fan or fan supports without short circuiting vibration isolation. Include provisions for adjustment of belt tension, lubrication, and use of tachometer with guard in place.
    g. Motor Mount: Adjustable for belt tensioning.
11. Accessories:
    a. Access for Inspection, Cleaning, and Maintenance: Comply with requirements in ASHRAE 62.1.
    b. Scroll Drain Connection: NPS 1 (DN 25) steel pipe coupling welded to low point of fan scroll.
12. Companion Flanges: Rolled flanges for duct connections of same material as housing.
13. Variable Inlet Vanes: With blades supported at both ends with two permanently lubricated bearings of same material as housing. Variable mechanism terminating in single control lever with control shaft for double-width fans.
14. Inlet Screens: Grid screen of same material as housing.
15. Shaft Cooler: Metal disk between bearings and fan wheel, designed to dissipate heat from shaft.
16. Spark-Resistant Construction: AMCA 99.
17. Shaft Seals: Airtight seals installed around shaft on drive side of single-width fans.
18. Weather Cover: Enameled-steel sheet with ventilation slots, bolted to housing.

2.3 MOTORS

A. Comply with NEMA designation, temperature rating, service factor, and efficiency requirements for motors specified in Section 230513 "Common Motor Requirements for HVAC Equipment."

2.4 SOURCE QUALITY CONTROL

A. Sound-Power Level Ratings: Comply with AMCA 301, "Methods for Calculating Fan Sound Ratings from Laboratory Test Data." Factory test fans according to AMCA 300, "Reverberant Room Method for Sound Testing of Fans." Label fans with the AMCA-Certified Ratings Seal.

B. Fan Performance Ratings: Establish flow rate, pressure, power, air density, speed of rotation, and efficiency by factory tests and ratings according to AMCA 210/ASHRAE 51, "Laboratory Methods of Testing Fans for Certified Aerodynamic Performance Rating."

PART 3 - EXECUTION

3.1 INSTALLATION

A. Install centrifugal fans level and plumb.

B. Disassemble and reassemble units, as required for moving to the final location, according to manufacturer's written instructions.

C. Lift and support units with manufacturer's designated lifting or supporting points.

D. Equipment Mounting:

1. Comply with requirements for vibration isolation and seismic control devices specified in Section 230548 "Vibration and Seismic Controls for HVAC."
2. Comply with requirements for vibration isolation devices specified in Section 230548.13 "Vibration Controls for HVAC."

E. Curb Support: Install roof curb on roof structure, level and secure, according to "The NRCA Roofing and Waterproofing Manual," Low-Slope Membrane Roofing Construction Details Section, Illustration "Raised Curb Detail for Rooftop Air Handling Units and Ducts."

1. Install and secure centrifugal fans on curbs, and coordinate roof penetrations and flashing with roof construction. Secure units to curb support with anchor bolts.
2. Install units with clearances for service and maintenance.
3. Label fans according to requirements specified in Section 230553 "Identification for HVAC Piping and Equipment."

3.2 CONNECTIONS

A. Drawings indicate general arrangement of ducts and duct accessories. Make final duct connections with flexible connectors. Flexible connectors are specified in Section 233300 "Air Duct Accessories."

B. Install ducts adjacent to fans to allow service and maintenance.

C. Install piping from scroll drain connection, with trap with seal equal to 1.5 times specified static pressure, to nearest floor drain with pipe sizes matching the drain connection.

3.3 FIELD QUALITY CONTROL

A. Testing Agency: Engage a qualified testing agency to perform tests and inspections.

B. Manufacturer's Field Service: Engage a factory-authorized service representative to test and inspect components, assemblies, and equipment installations, including connections.

C. Perform the following tests and inspections with the assistance of a factory-authorized service representative:

1. Verify that shipping, blocking, and bracing are removed.
2. Verify that unit is secure on mountings and supporting devices and that connections to ducts and electrical components are complete. Verify that proper thermal-overload protection is installed in motors, starters, and disconnect switches.
3. Verify that cleaning and adjusting are complete.
4. Disconnect fan drive from motor, verify proper motor rotation direction, and verify fan wheel free rotation and smooth bearing operation. Reconnect fan drive system, align and adjust belts, and install belt guards.
5. Adjust belt tension.
6. Adjust damper linkages for proper damper operation.
7. Verify lubrication for bearings and other moving parts.
8. Verify that manual and automatic volume control and fire and smoke dampers in connected ductwork systems are in fully open position.
9. See Section 230593 "Testing, Adjusting, and Balancing For HVAC" for testing, adjusting, and balancing procedures.
10. Remove and replace malfunctioning units and retest as specified above.
11. Test and adjust controls and safeties. Controls and equipment will be considered defective if they do not pass tests and inspections.
12. Prepare test and inspection reports.

3.4 DEMONSTRATION

A. Engage a factory-authorized service representative to train Owner's maintenance personnel to adjust, operate, and maintain centrifugal fans.

END OF SECTION 233416

SECTION 233713 - DIFFUSERS, REGISTERS, AND GRILLES

PART 1 - GENERAL

1.1 RELATED DOCUMENTS

A. Drawings and general provisions of the Contract, including General and Supplementary Conditions and Division 1 Specification Sections, apply to this Section.

1.2 SUMMARY

A. This Section includes ceiling- and wall-mounted diffusers, registers, and grilles.

B. Related Sections include the following:

1. Division 23 Section "Air Duct Accessories" for fire dampers and volume-control dampers not integral to diffusers, registers, and grilles.

1.3 SUBMITTALS

A. Product Data: For each product indicated, include the following:

1. Data Sheet: Indicate materials of construction, finish, and mounting details; and performance data including throw and drop, static-pressure drop, and noise ratings.
2. Diffuser, Register, and Grille Schedule: Indicate Drawing designation, room location, quantity, model number, size, and accessories furnished.

B. Coordination Drawings ceiling plans, drawn to scale, on which the following items are shown and coordinated with each other, based on input from installers of the items involved:

1. Ceiling suspension assembly members.
2. Method of attaching hangers to building structure.
3. Size and location of initial access modules for acoustical tile.
4. Ceiling-mounted items including lighting fixtures, diffusers, grilles, speakers, sprinklers, access panels, and special moldings.
5. Duct access panels.

C. Samples for Initial Selection: For diffusers, registers, and grilles with factory-applied color finishes.

D. Samples for Verification: For diffusers, registers, and grilles, in manufacturer's standard sizes to verify color selected.

PART 2 - PRODUCTS

2.1 MANUFACTURERS

A. In other Part 2 articles where titles below introduce lists, the following requirements apply to product selection:

1. Available Products: Subject to compliance with requirements, products that may be incorporated into the Work include, but are not limited to, products specified.
2. Products: Subject to compliance with requirements, provide one of the products specified.
3. Available Manufacturers: Subject to compliance with requirements, manufacturers offering products that may be incorporated into the Work include, but are not limited to, manufacturers specified.
4. Manufacturers: Subject to compliance with requirements, provide products by one of the manufacturers specified.

2.2 DIFFUSERS AND REGISTERS

A. Manufacturers:

1. Titus
2. Krueger
3. Price

B. Refer to drawings for types and model numbers of diffusers, registers, and grilles.

2.3 SOURCE QUALITY CONTROL

A. Verification of Performance: Rate diffusers, registers, and grilles according to ASHRAE 70, "Method of Testing for Rating the Performance of Air Outlets and Inlets."

PART 3 - EXECUTION

3.1 EXAMINATION

A. Examine areas where diffusers, registers, and grilles are to be installed for compliance with requirements for installation tolerances and other conditions affecting performance of equipment.

B. Proceed with installation only after unsatisfactory conditions have been corrected.

3.2 INSTALLATION

A. Install diffusers, registers, and grilles level and plumb.

B. Ceiling-Mounted Outlets and Inlets: Drawings indicate general arrangement of ducts, fittings, and accessories. Air outlet and inlet locations have been indicated to achieve design requirements for air volume, noise criteria, airflow pattern, throw, and pressure drop. Make final locations where indicated, as much as practicable. For units installed in lay-in ceiling panels, locate units in the center of panel. Where architectural features or other items conflict with installation, notify Architect for a determination of final location.

C. Install diffusers, registers, and grilles with airtight connections to ducts and to allow service and maintenance of dampers, air extractors, and fire dampers.

3.3 ADJUSTING

A. After installation, adjust diffusers, registers, and grilles to air patterns indicated, or as directed, before starting air balancing.

END OF SECTION 233713

SECTION 233813 -COMMERCIAL-KITCHEN HOODS AT TATEM ELEMENTARY SCHOOL

PART 1 - GENERAL

1.1 RELATED DOCUMENTS

A. Drawings and general provisions of the Contract, including General and Supplementary Conditions and Division 01 Specification Sections, apply to this Section.

1.2 SUMMARY

A. This Section includes Type I and Type II commercial kitchen hoods.

1.3 DEFINITIONS

A. Listed Hood: A hood, factory fabricated and tested for compliance with UL 710 by a testing agency acceptable to authorities having jurisdiction.

B. Standard Hood: A hood, usually field fabricated, that complies with design, construction, and performance criteria of applicable national and local codes.

C. Type I Hood: A hood designed for grease exhaust applications.

D. Type II Hood: A hood designed for heat and steam removal and for other non-grease applications.

1.4 ACTION SUBMITTALS

A. Product Data: For the following:

1. Standard hoods.
2. Filters/baffles.
3. Fire-suppression systems.
4. Lighting fixtures.

B. Shop Drawings: Signed and sealed by a qualified professional engineer.

1. Shop Drawing Scale: 1/4 inch = 1 foot.
2. Show plan view, elevation view, sections, roughing-in dimensions, service requirements, duct connection sizes, and attachments to other work.
3. Show cooking equipment plan and elevation to confirm minimum code-required overhang.
4. Indicate performance, exhaust and makeup air airflow, and pressure loss at actual Project-site elevation.
5. Show water-supply and drain piping connections.
6. Show control cabinets.
7. Show fire-protection cylinders, piping, actuation devices, and manual control devices.

8. Detail equipment assemblies and indicate dimensions, weights, loads, required clearances, method of field assembly, components, and location and size of each field connection.
9. Design Calculations: Calculate requirements for selecting seismic restraints.
10. Wiring Diagrams: Power, signal, and control wiring.
11. Piping Diagrams: Detail fire-suppression piping and components and differentiate between manufacturer-installed and field-installed piping. Include roughing-in requirements for drain connections. Show cooking equipment plan and elevation to illustrate fire-suppression nozzle locations.
    a. Piping Diagram Scale: 1/4 inch = 1 foot.

1.5 INFORMATIONAL SUBMITTALS

A. Coordination Drawings: Reflected ceiling plans, drawn to scale, on which the following items are shown and coordinated with each other, based on input from installers of the items involved:

1. Coordination Drawing Scale: 1/4 inch = 1 foot.
2. Suspended ceiling assembly components.
3. Structural members to which equipment will be attached.
4. Roof framing and support members for duct penetrations.
5. Items penetrating finished ceiling, including the following:
    a. Lighting fixtures.
    b. Air outlets and inlets.
    c. Speakers.
    d. Sprinklers.
    e. Access panels.
    f. Moldings on hoods and accessory equipment.

B. Welding certificates.

C. Manufacturer Seismic Qualification Certification: Submit certification that commercial kitchen hoods, accessories, and components will withstand seismic forces defined in Section 230548 "Vibration and Seismic Controls for HVAC." Include the following:

1. Basis for Certification: Indicate whether withstand certification is based on actual test of assembled components or on calculation.
    a. The term "withstand" means "the unit will remain in place without separation of any parts from the device when subjected to the seismic forces specified."
    b. The term "withstand" means "the unit will remain in place without separation of any parts from the device when subjected to the seismic forces specified and the unit will be fully operational after the seismic event."
2. Dimensioned Outline Drawings of Equipment Unit: Identify center of gravity and locate and describe mounting and anchorage provisions.
3. Detailed description of equipment anchorage devices on which the certification is based and their installation requirements.

D. Field quality-control test reports.

1.6 QUALITY ASSURANCE

A. Engineering Responsibility: Preparation of Shop Drawings and comprehensive engineering analysis by a qualified professional engineer.

B. Welding: Qualify procedures and personnel according to AWS D1.1/D 1.1M, "Structural Welding Code - Steel," for hangers and supports; and AWS D9.1/D9.1M, "Sheet Metal Welding Code," for joint and seam welding.

C. Electrical Components, Devices, and Accessories: Listed and labeled as defined in NFPA 70, Article 100, by a testing agency acceptable to authorities having jurisdiction, and marked for intended use.

D. Preinstallation Conference: Conduct conference at Project site to comply with requirements in Section 013100 "Project Management and Coordination."

1.7 COORDINATION

A. Coordinate equipment layout and installation with adjacent Work, including lighting fixtures, HVAC equipment, plumbing, and fire-suppression system components.

1.8 EXTRA MATERIALS

A. Furnish extra materials described below that match products installed and that are packaged with protective covering for storage and identified with labels describing contents.

1. Furnish one complete set(s) of grease filters/baffles.

PART 2 - PRODUCTS

2.1 HOOD MATERIALS

A. Stainless-Steel Sheet: ASTM A 666, Type 304.

1. Minimum Thickness: 0.037 inch.
2. Finish: Comply with SSINA's "Finishes for Stainless Steel" for recommendations for applying and designating finishes.
   a. Finish shall be free from tool and die marks and stretch lines and shall have uniform, directionally textured, polished finish indicated, free of cross scratches. Grain shall run with long dimension of each piece.
3. Concealed Stainless-Steel Surfaces: ASTM A 480/A 480M, No. 2B finish (bright, cold-rolled, unpolished finish).
4. Exposed Surfaces: ASTM A 480/A 480M, No. 3 finish (intermediate polished surface).
5. When polishing is completed, passivate and rinse surfaces. Remove embedded foreign matter and leave surfaces chemically clean.

B. Zinc-Coated Steel Shapes: ASTM A 36/A 36M, zinc coated according to ASTM A 123/A 123M requirements.

C. Sealant: ASTM C 920; Type S, Grade NS, Class 25, Use NT. Elastomeric sealant shall be NSF certified for commercial kitchen hood application. Sealants, when cured and washed, shall comply with requirements in 21 CFR, Section 177.2600, for use in areas that come in contact with food.

1. Color: As selected by Architect from manufacturer's full range.
2. Backer Rod: Closed-cell polyethylene, in diameter larger than joint width.

D. Sound Dampening: NSF-certified, nonabsorbent, hard-drying, sound-deadening compound for permanent adhesion to metal in minimum 1/8-inch (3-mm) thickness that does not chip, flake, or blister.

E. Gaskets: NSF certified for end-use application indicated; of resilient rubber, neoprene, or PVC that is nontoxic, stable, odorless, nonabsorbent, and unaffected by exposure to foods and cleaning compounds, and that passes testing according to UL 710.

2.2 GENERAL HOOD FABRICATION REQUIREMENTS

A. Welding: Use welding rod of same composition as metal being welded. Use methods that minimize distortion and develop strength and corrosion resistance of base metal. Make ductile welds free of mechanical imperfections such as gas holes, pits, or cracks.

1. Welded Butt Joints: Full-penetration welds for full-joint length. Make joints flat, continuous, and homogenous with sheet metal without relying on straps under seams, filling in with solder, or spot welding.
2. Grind exposed welded joints flush with adjoining material and polish to match adjoining surfaces.
3. Where fasteners are welded to underside of equipment, finish reverse side of weld smooth and flush.
4. Coat concealed stainless-steel welded joints with metallic-based paint to prevent corrosion.
5. After zinc-coated steel is welded, clean welds and abraded areas and apply SSPC-Paint 20, high-zinc-dust-content, galvanizing repair paint to comply with ASTM A 780/A 780M.

B. For metal butt joints, comply with SMACNA's "Kitchen Ventilation Systems & Food Service Equipment Guidelines."

C. Where stainless steel is joined to a dissimilar metal, use stainless-steel welding material or fastening devices.

D. Form metal with break bends that are not flaky, scaly, or cracked in appearance; where breaks mar uniform surface appearance of material, remove marks by grinding, polishing, and finishing.

E. Sheared Metal Edges: Finish free of burrs, fins, and irregular projections.

F. In food zones, as defined in NSF, fabricate surfaces free from exposed fasteners.

G. Cap exposed fastener threads, including those inside cabinets, with stainless-steel lock washers and stainless-steel cap (acorn) nuts.

H. Fabricate pipe slots on equipment with turned-up edges sized to accommodate service and utility lines and mechanical connections.

I. Fabricate enclosures, including panels, housings, and skirts, to conceal service lines, operating components, and mechanical and electrical devices including those inside cabinets, unless otherwise indicated.

J. Fabricate seismic restraints according to SMACNA's "Kitchen Ventilation Systems & Food Service Equipment Guidelines," Appendix A, "Seismic Restraint Details."

K. Fabricate equipment edges and backsplashes according to SMACNA's "Kitchen Ventilation Systems & Food Service Equipment Guidelines."

L. Fabricate enclosure panels to ceiling and wall as follows:

1. Fabricate panels on all exposed side(s) with same material as hood and extend from ceiling to top of hood canopy and from canopy to wall.
2. Wall Offset Spacer: Minimum of 3 inches (75 mm).
3. Wall Shelves and Overshelves: Fabricate according to SMACNA's "Kitchen Ventilation Systems & Food Service Equipment Guidelines," with minimum 0.0625-inch- (1.58-mm-) thick, stainless-steel shelf tops.

2.3 TYPE I EXHAUST HOOD FABRICATION

A. Available Manufacturers: Subject to compliance with requirements, manufacturers offering products that may be incorporated into the Work include, but are not limited to, the following:

B. Manufacturers: Subject to compliance with requirements, provide products by one of the following:

1. Captive Air
2. Greenheck.
3. Approved equal

C. Weld all joints exposed to grease with continuous welds and make filters/baffles or grease extractors and makeup air diffusers easily accessible for cleaning.

1. Fabricate hoods according to NSF 2, "Food Equipment."
2. Hoods shall be listed and labeled, according to UL 710, by a testing agency acceptable to authorities having jurisdiction.
3. Hoods shall be designed, fabricated, and installed according to NFPA 96.
4. Include access panels as required for access to fire dampers and fusible links.
5. Duct Collars: Minimum 0.0598-inch-thick steel at least 3 inches long, continuously welded to top of hood and at corners. Fabricate a collar with a 0.5-inch- wide duct flange.
6. Duct-Collar Fire Dampers: Collar and damper shall comply with UL 710 testing and listing required for the entire hood.
   a. Collar: Minimum 0.0598-inch- thick stainless steel, at least 3 inches long, continuously welded to top of hood and at corners. Fabricate a collar with a minimum 0.5-inch-wide duct flange.
   b. Blades: Minimum 0.1046-inch-thick stainless steel, counterbalanced to remain closed after actuation.
   c. Blade Pivot and Spring: Stainless steel.

d. Fusible Link: Replaceable, 212 deg F rated.

7. Makeup Air Fire Dampers: Labeled, according to UL 555, by a testing agency acceptable to authorities having jurisdiction.
   a. Fire Rating: 1-1/2 hours.
   b. Frame: SMACNA [Type B, with blades in airstream; fabricated with roll-formed, galvanized steel; with mitered and interlocking corners.
   c. Blades: Roll-formed, interlocking or folded, minimum 0.034-inch-thick, galvanized-steel sheet.
   d. Horizontal Dampers: Include a blade lock and stainless-steel closure spring.
   e. Fusible Link: Replaceable, 165 deg Frated.

D. Hood Configuration: Exhaust and makeup air.

1. Makeup air shall be introduced through front of canopy through perforated diffusers.

E. Hood Style: Wall-mounted canopy.

F. Filters/Baffles: Removable, stainless-steel with spring-loaded fastening. Fabricate stainless steel for filter frame and removable collection cup and pitched trough. Exposed surfaces shall be pitched to drain to collection cup. Filters/baffles shall be tested according to UL 1046, "Grease Filters for Exhaust Ducts," by an NRTL acceptable to authorities having jurisdiction.

G. Removable Water-Wash Grease Extractor: Stainless steel, tested with hood according to UL 710.

H. Stationary Water-Wash Grease Extractor: Integral, automatically self-cleaning, spraying hot water and detergent over the entire length of exhaust plenum. Fabricate to supply 140 deg F water at 1.25 gpm/ft. of hood length, at 40- to 60-psig inlet pressure.

1. Water Piping: ASTM A 270, Type 304 stainless steel.
2. Fabricate to drain water and detergent to a collection trough having stainless-steel drain fittings.
3. Single, hood-mounting control panel with a solid-state, programmable controller shall control all hoods on Project. Wash cycle shall be factory set to operate for 10 minutes after fans stop.
4. Detergent shall be supplied by an adjustable-flow, 120-V ac injection pump from a reservoir with a minimum capacity of 2.5 gal. (9.5 L).

I. Lighting Fixtures: Surface-mounted, [fluorescent] [incandescent] fixtures and lamps with lenses sealed vaportight. Wiring shall be installed in conduit on hood exterior. Number and location of fixtures shall provide a minimum of 70 fc (753 lx) at 30 inches (762 mm) above finished floor.

1. Light switches shall be mounted [on front panel of hood canopy] [on wall adjacent to hood] [in hood control panel].
2. Lighting Fixtures: Incandescent complying with UL 1598.

J. Comply with requirements in Section 230923 "Direct Digital Control (DDC) System for HVAC" and Section 230993.11 "Sequence of Operations for HVAC DDC" for hood controls.

K. Hood Controls: Hood-mounting control cabinet, factory wired to control groups of adjacent hoods, and fabricated of stainless steel.

1. Exhaust Fan: On-off switches shall start and stop the exhaust fan. Interlock exhaust fan with makeup air supply fan to operate simultaneously. Interlock exhaust fan with fire-suppression system to operate fan(s) during fire-suppression-agent release and to remain in operation until manually stopped. Include red pilot light to indicate fan operation. Motor starters shall comply with Section 262913 "Enclosed Controllers."

L. Capacities and Characteristics: Refer to schedules for information

2.4 TYPE II EXHAUST HOOD FABRICATION

A. Available Manufacturers: Subject to compliance with requirements, manufacturers offering products that may be incorporated into the Work include, but are not limited to, the following:

B. Manufacturers: Subject to compliance with requirements, provide products by one of the following:

1. Captive Air
2. Greenheck.
3. Approved equal

C. Fabricate hoods according to NSF 2, "Food Equipment."

D. Fabricate hoods to comply with SMACNA's "HVAC Duct Construction Standards: Metal and Flexible."

E. Hood Configuration: Exhaust only.

1. Makeup air shall be introduced by a separate unit for the space.

F. Hood Type: Heat and vapor removal.

G. Hood Style: Wall-mounted canopy.

H. Condensate Hood Baffles: Removable, stainless-steel baffles to drain into a hood drain trough, and stainless-steel drain piping.

I. Lighting Fixtures: Surface-mounted, incandescent fixtures and lamps with lenses sealed vaportight. Wiring shall be installed in stainless-steel conduit on hood exterior. Number and location of fixtures shall provide a minimum of 70 fc at 30 inches above finished floor.

1. Light switches shall be mounted on front panel of hood canopy.
2. Lighting Fixtures: Incandescent complying with UL 1598.

J. Capacities and Characteristics: refer to schedules for information.

2.5 WET-CHEMICAL FIRE-SUPPRESSION SYSTEM

A. Wet-Chemical Fire-Suppression Systems shall be manufactured by:

1. Ansul Incorporated; Tyco International
2. Kidde Fire Systems

3. Badger Fire Protection
4. Approved Equal.

B. Description: Engineered distribution piping designed for automatic detection and release or manual release of fire-suppression agent by hood operator. Fire-suppression system shall be listed and labeled for complying with NFPA 17A, "Wet Chemical Extinguishing Systems," by a qualified testing agency acceptable to authorities having jurisdiction.

1. Steel Pipe, NPS 2 (DN 50) and Smaller: ASTM A 53/A 53M, Type S, Grade A, Schedule 40, plain ends.
2. Malleable-Iron Threaded Fittings: ASME B16.3, Classes 150 and 300.
3. Piping, fusible links and release mechanism, tank containing the suppression agent, and controls shall be factory installed. Controls shall be in stainless-steel control cabinet mounted on wall. Furnish manual pull station for wall mounting. Exposed piping shall be covered with chrome-plated aluminum tubing. Exposed fittings shall be chrome plated.
4. Liquid Extinguishing Agent: Noncorrosive, low-pH liquid.
5. Furnish electric-operated gas shutoff valve; refer to Section 231123 "Facility Natural-Gas Piping."
6. Furnish electric-operated gas shutoff valve with clearly marked open and closed indicator for field installation.
7. Fire-suppression system controls shall be integrated with controls for fans, lights, and fuel supply and located in a single cabinet for each group of hoods immediately adjacent.
8. Wiring shall have color-coded, numbered terminal blocks and grounding bar. Spare terminals for fire alarm, optional wiring to start fan with fire alarm, red pilot light to indicate fan operation, and control switches shall all be factory wired in control cabinet with relays or starters. Include spare terminals for fire alarm and wiring to start fan with fire alarm.

PART 3 - EXECUTION

3.1 EXAMINATION

A. Examine substrates and conditions, with Installer present, for compliance with requirements for installation tolerances and other conditions affecting performance.

B. Examine roughing-in for piping systems to verify actual locations of piping connections before equipment installation.

C. Proceed with installation only after unsatisfactory conditions have been corrected.

3.2 INSTALLATION

A. Complete field assembly of hoods where required.

1. Make closed butt and contact joints that do not require filler.
2. Grind field welds on stainless-steel equipment smooth, and polish to match adjacent finish. Comply with welding requirements in Part 2 "General Hood Fabrication Requirements" Article.

B. Install hoods and associated services with clearances and access for maintaining, cleaning, and servicing hoods, filters/baffles, grease extractor, and fire-suppression systems according to manufacturer's written instructions and requirements of authorities having jurisdiction.

C. Make cutouts in hoods where required to run service lines and to make final connections, and seal openings according to UL 1978.

D. Securely anchor and attach items and accessories to walls, floors, or bases with stainless-steel fasteners, unless otherwise indicated.

E. Install hoods to operate free from vibration.

F. Install seismic restraints according to SMACNA's "Kitchen Ventilation Systems & Food Service Equipment Guidelines," Appendix A, "Seismic Restraint Details."

G. Install trim strips and similar items requiring fasteners in a bed of sealant. Fasten with stainless-steel fasteners at 48 inches o.c. maximum.

H. Install sealant in joints between equipment and abutting surfaces with continuous joint backing, unless otherwise indicated. Provide airtight, watertight, vermin-proof, sanitary joints.

I. Install lamps, with maximum recommended wattage, in equipment with integral lighting.

J. Set initial temperatures and calibrate sensors.

K. Set field-adjustable switches.

3.3 CONNECTIONS

A. Install piping with clearance to allow service and maintenance.

B. Install reduced-pressure backflow preventer on washer-water supply. Backflow preventer is specified in Section 221119 "Domestic Water Piping Specialties."

C. Install washer-water drain piping full size of hood connection to an adjacent floor drain or floor sink.

D. Makeup Water Connection: Comply with applicable requirements in Section 221119 "Domestic Water Piping Specialties" for valves and accessories on piping connections to water-cooled units.

E. Connect ducts according to requirements in Section 233300 "Air Duct Accessories." Install flexible connectors on makeup air supply duct. Weld exhaust-duct connections with continuous liquid tight joint.

F. Install fire-suppression piping for remote-mounted suppression systems according to NFPA 17A, "Wet Chemical Extinguishing Systems."

3.4 FIELD QUALITY CONTROL

A. Testing Agency: Engage a qualified testing agency to perform tests and inspections and prepare test reports.

B. Manufacturer's Field Service: Engage a factory-authorized service representative to inspect, test, and adjust components, assemblies, and equipment installations, including connections. Report results in writing.

C. Perform tests and inspections.

1. Manufacturer's Field Service: Engage a factory-authorized service representative to inspect components, assemblies, and equipment installations, including connections, and to assist in testing.

D. Tests and Inspections:

1. Test each equipment item for proper operation. Repair or replace equipment that is defective, including units that operate below required capacity or that operate with excessive noise or vibration.
2. Test and adjust controls and safeties. Replace damaged and malfunctioning controls and equipment.
3. Test water, drain, gas, and liquid-carrying components for leaks. Repair or replace leaking components.
4. Perform hood performance tests required by authorities having jurisdiction.
5. Perform fire-suppression system performance tests required by authorities having jurisdiction.

E. Prepare test and inspection reports.

3.5 DEMONSTRATION

A. Engage a factory-authorized service representative to train Owner's maintenance personnel to adjust, operate, and maintain commercial kitchen hoods. Refer to Section 017900 "Demonstration and Training."

END OF SECTION 233813

SECTION 236200 - PACKAGED COMPRESSOR AND CONDENSER UNITS

PART 1 - GENERAL

1.1 RELATED DOCUMENTS

A. Drawings and general provisions of the Contract, including General and Supplementary Conditions and Division 01 Specification Sections, apply to this Section.

1.2 SUMMARY

A. Section includes packaged, refrigerant compressor and condenser units.

1.3 PERFORMANCE REQUIREMENTS

A. Seismic Performance: Compressor and condenser units shall withstand the effects of earthquake motions determined according to ASCE/SEI 7.

1. The term "withstand" means "the unit will remain in place without separation of any parts from the device when subjected to the seismic forces specified and the unit will be fully operational after the seismic event."

1.4 ACTION SUBMITTALS

A. Product Data: For each compressor and condenser unit. Include rated capacities, operating characteristics, and furnished specialties and accessories. Include equipment dimensions, weights and structural loads, required clearances, method of field assembly, components, and location and size of each field connection.

B. LEED Submittals:

1. Product Data for Prerequisite EA 2: Documentation indicating that units comply with applicable requirements in ASHRAE/IESNA 90.1.
2. Product Data for Credit EA 4: Documentation indicating that compressor and condenser units and refrigerants comply.

C. Shop Drawings: For compressor and condenser units. Include plans, elevations, sections, details, and attachments to other work.

1. Wiring Diagrams: For power, signal, and control wiring.

D. Delegated-Design Submittal: For compressor and condenser units indicated to comply with performance requirements and design criteria, including analysis data signed and sealed by the qualified professional engineer responsible for their preparation.

1. Vibration Isolation Base Details: Detail fabrication including anchorages and attachments to structure and to supported equipment. Include adjustable motor bases, rails, and frames for equipment mounting.

2. Design Calculations: Calculate requirements for selecting vibration isolators and seismic restraints and for designing vibration isolation bases.

1.5 INFORMATIONAL SUBMITTALS

A. Coordination Drawings: Plans, drawn to scale, on which the following items are shown and coordinated with each other, based on input from installers of the items involved:

1. Structural members to which compressor and condenser units will be attached.
2. Liquid and vapor pipe sizes.
3. Refrigerant specialties.
4. Piping including connections, oil traps, and double risers.
5. Compressors.
6. Evaporators.

B. Seismic Qualification Certification: For compressor and condenser units, accessories, and components, from manufacturer.

1. Basis for Certification: Indicate whether withstand certification is based on actual test of assembled components or on calculation.
2. Dimensioned Outline Drawings of Equipment Unit: Identify center of gravity and locate and describe mounting and anchorage provisions.
3. Detailed description of equipment anchorage devices on which the certification is based and their installation requirements.

C. Field quality-control reports.

D. Warranty: Sample of special warranty.

1.6 CLOSEOUT SUBMITTALS

A. Operation and Maintenance Data: For compressor and condenser units to include in emergency, operation, and maintenance manuals.

1.7 QUALITY ASSURANCE

A. Electrical Components, Devices, and Accessories: Listed and labeled as defined in NFPA 70, by a qualified testing agency, and marked for intended location and application.

B. Fabricate and label refrigeration system according to ASHRAE 15, "Safety Standard for Refrigeration Systems."

C. ASHRAE/IESNA 90.1 Compliance: Applicable requirements in ASHRAE/IESNA 90.1, Section 6, "Heating, Ventilating, and Air-Conditioning."

D. ASME Compliance: Fabricate and label water-cooled compressor and condenser units to comply with ASME Boiler and Pressure Vessel Code: Section VIII, Division 1.

1.8 COORDINATION

A. Coordinate sizes and locations of concrete bases. Cast anchor-bolt inserts into bases. Concrete, reinforcement, and formwork requirements are specified in Section 033000 "Cast-In-Place Concrete" and Section 033053 "Miscellaneous Cast-In-Place Concrete."

B. Coordinate installation of roof curbs, equipment supports, and roof penetrations. These items are specified in Section 077200 "Roof Accessories."

C. Coordinate location of piping and electrical rough-ins.

1.9 WARRANTY

A. Special Warranty: Manufacturer's standard form in which manufacturer agrees to repair or replace components of compressor and condenser units that fail in materials or workmanship within specified warranty period.

1. Failures include, but are not limited to, the following:
   a. Compressor failure.
   b. Condenser coil leak.
2. Warranty Period: Five years from date of Substantial Completion.
3. Warranty Period (Compressor Only): Five years from date of Substantial Completion.
4. Warranty Period (Components Other Than Compressor): Five years from date of Substantial Completion.
5. Warranty Period (Condenser Coil Only): Five years from date of Substantial Completion.

PART 2 - PRODUCTS

2.1 COMPRESSOR AND CONDENSER UNITS, AIR COOLED, 1 TO 5 TONS (3.5 TO 17.6 kW)

A. Manufacturers:

1. Carrier Corp.
2. Lennox Industries Inc.
3. Trane Company (The); North American Commercial Group.
4. Mammoth Inc.
5. Or approved equal.

B. Description: Factory assembled and tested; consisting of compressor, condenser coil, fan, motors, refrigerant reservoir, and operating controls.

C. Compressor: Scroll, hermetically sealed, with rubber vibration isolators.

1. Motor: Single speed and includes thermal- and current-sensitive overload devices, start capacitor, relay, and contactor.
2. Two-Speed Compressor: Include manual-reset, high-pressure switch and automatic-reset, low-pressure switch.
3. Accumulator: Suction tube.

D. Refrigerant: R-454b.

E. Condenser Coil: Seamless copper-tube, aluminum-fin coil; circuited for integral liquid subcooler, with removable drain pan and brass service valves with service ports.

F. Condenser Fan: Direct-drive, aluminum propeller fan; with permanently lubricated, totally enclosed fan motor with thermal-overload protection and ball bearings.

G. Accessories:

1. Coastal Filter: Mesh screen to protect condenser coil from salt damage.
2. Crankcase heater.
3. Cycle Protector: Automatic-reset timer to prevent rapid compressor cycling.
4. Low-voltage thermostat and subbase to control compressor and condenser unit and evaporator fan.
5. Evaporator Freeze Thermostat: Temperature-actuated switch that stops unit when evaporator reaches freezing temperature.
6. Filter-dryer.
7. High-Pressure Switch: Automatic-reset switch cycles compressor off on high refrigerant pressure.
8. Liquid-line solenoid.
9. Low-Ambient Controller: Cycles condenser fan to permit operation down to 0 deg F (minus 18 deg C) with time-delay relay to bypass low-pressure switch.
10. Low-Pressure Switch: Automatic-reset switch cycles compressor off on low refrigerant pressure.
11. PE mounting base.
12. Pre-charged and insulated suction and liquid tubing.
13. Sound Hood: Wraps around sound attenuation cover for compressor.
14. Thermostatic expansion valve.
15. Time-Delay Relay: Continues operation of evaporator fan after compressor shuts off.
16. Reversing valve.

H. Unit Casing: Galvanized steel, finished with baked enamel; with removable panels for access to controls, weep holes for water drainage, and mounting holes in base. Mount service valves, fittings, and gage ports on exterior of casing.

I. Capacities and Characteristics:

1. Refer to drawings and schedules

2.2 MOTORS

A. Comply with NEMA designation, temperature rating, service factor, enclosure type, and efficiency requirements for motors specified in Section 230513 "Common Motor Requirements for HVAC Equipment."

1. Motor Sizes: Minimum size as indicated. If not indicated, large enough so driven load will not require motor to operate in service factor range above 1.0.

2.3 SOURCE QUALITY CONTROL

A. Verification of Performance: Rate compressor and condenser units according to ARI 206/110.

B. Energy Efficiency: Equal to or greater than prescribed by ASHRAE/IESNA 90.1, "Energy Efficient Design of New Buildings except Low-Rise Residential Buildings," Section 6, "Heating, Ventilating, and Air-Conditioning."

C. Test and inspect shell and tube condensers according to ASME Boiler and Pressure Vessel Code: Section VIII, Division 1.

D. Testing Requirements: Factory test sound-power-level ratings according to ARI 270.

PART 3 - EXECUTION

3.1 EXAMINATION

A. Examine substrates, areas, and conditions, with Installer present, for compliance with requirements for installation tolerances and other conditions affecting performance of compressor and condenser units.

B. Examine roughing-in for refrigerant piping systems to verify actual locations of piping connections before equipment installation.

C. Examine walls, floors, and roofs for suitable conditions where compressor and condenser units will be installed.

D. Proceed with installation only after unsatisfactory conditions have been corrected.

3.2 INSTALLATION

A. Install units level and plumb, firmly anchored in locations indicated.

B. Install roof-mounting units on equipment supports specified in Section 077200 "Roof Accessories."

C. Equipment Mounting:

1. Comply with requirements for vibration isolation and seismic control devices specified in Section 230548 "Vibration and Seismic Controls for HVAC."
2. Comply with requirements for vibration isolation devices specified in Section 230548.13 "Vibration Controls for HVAC."

D. Maintain manufacturer's recommended clearances for service and maintenance.

E. Loose Components: Install electrical components, devices, and accessories that are not factory mounted.

3.3 CONNECTIONS

A. Comply with requirements for piping in other Section 232113 "Hydronic Piping" and Section 232116 Hydronic Piping Specialties." Drawings indicate general arrangement of piping, fittings, and specialties.

B. Where installing piping adjacent to equipment, allow space for service and maintenance of equipment.

C. Connect pre-charged refrigerant tubing to unit's quick-connect fittings. Install tubing so it does not interfere with access to unit. Install furnished accessories.

D. Connect refrigerant piping to air-cooled compressor and condenser units; maintain required access to unit. Install furnished field-mounted accessories. Refrigerant piping and specialties are specified in Section 232300 "Refrigerant Piping."

3.4 FIELD QUALITY CONTROL

A. Perform tests and inspections.

1. Manufacturer's Field Service: Engage a factory-authorized service representative to inspect, test, and adjust components, assemblies, and equipment installations, including connections, and to assist in testing.

B. Tests and Inspections:

1. Perform each visual and mechanical inspection and electrical test. Certify compliance with test parameters.
2. Leak Test: After installation, charge system with refrigerant and oil and test for leaks. Repair leaks, replace lost refrigerant and oil, and retest until no leaks exist.
3. Operational Test: After electrical circuitry has been energized, start units to confirm proper motor operation and unit operation, product capability, and compliance with requirements.
4. Test and adjust controls and safeties. Replace damaged and malfunctioning controls and equipment.
5. Verify proper airflow over coils.

C. Verify that vibration isolation and flexible connections properly dampen vibration transmission to structure.

D. Compressor and condenser units will be considered defective if they do not pass tests and inspections.

E. Prepare test and inspection reports.

3.5 STARTUP SERVICE

A. Engage a factory-authorized service representative to perform startup service.

1. Complete installation and startup checks according to manufacturer's written instructions and perform the following:
   a. Inspect for physical damage to unit casing.
   b. Verify that access doors move freely and are weathertight.
   c. Clean units and inspect for construction debris.
   d. Verify that all bolts and screws are tight.
   e. Adjust vibration isolation and flexible connections.
   f. Verify that controls are connected and operational.

B. Lubricate bearings on fan motors.

C. Verify that fan wheel is rotating in the correct direction and is not vibrating or binding.

D. Adjust fan belts to proper alignment and tension.

E. Start unit according to manufacturer's written instructions and complete manufacturer's startup checklist.

F. Measure and record airflow and air temperature rise over coils.

G. Verify proper operation of condenser capacity control device.

H. Verify that vibration isolation and flexible connections properly dampen vibration transmission to structure.

I. After startup and performance test, lubricate bearings.

3.6 DEMONSTRATION

A. Engage a factory-authorized service representative to train Owner's maintenance personnel to adjust, operate, and maintain compressor and condenser units.

END OF SECTION 236200

SECTION 237200 - AIR-TO-AIR ENERGY RECOVERY EQUIPMENT

PART 1 - GENERAL

1.1 SUMMARY

A. Section Includes:
   1. Fixed-plate total heat exchangers.

1.2 PERFORMANCE REQUIREMENTS

A. Delegated Design: Design vibration isolation and seismic-restraint details, including comprehensive engineering analysis by a qualified professional engineer, using performance requirements and design criteria indicated.

1.3 ACTION SUBMITTALS

A. Product Data: For each type of product indicated.

B. Shop Drawings: For air-to-air energy recovery equipment. Include plans, elevations, sections, details, and attachments to other work.

   1. Detail equipment assemblies and indicate dimensions, weights, loads, required clearances, method of field assembly, components, and location and size of each field connection.
   2. Wiring Diagrams: For power, signal, and control wiring.

C. Delegated-Design Submittal: For air-to-air energy recovery equipment indicated to comply with performance requirements and design criteria, including analysis data signed and sealed by the qualified professional engineer responsible for their preparation.

   1. Detail fabrication and assembly of air-to-air energy recovery equipment.
   2. Vibration Isolation Base Details: Detail fabrication including anchorages and attachments to structure and to supported equipment. Include adjustable motor bases, rails, and frames for equipment mounting.

1.4 INFORMATIONAL SUBMITTALS

A. Seismic Qualification Certificates: For air-to-air energy recovery equipment, accessories, and components, from manufacturer.

1.5 CLOSEOUT SUBMITTALS

A. Operation and maintenance data.

1.6 MAINTENANCE MATERIAL SUBMITTALS

A. Furnish extra materials that match products installed and that are packaged with protective covering for storage and identified with labels describing contents.

1. Filters: One set(s) of each type of filter specified.
2. Fan Belts: One set(s) of belts for each belt-driven fan in energy recovery units.

1.7 QUALITY ASSURANCE

A. Electrical Components, Devices, and Accessories: Listed and labeled as defined in NFPA 70, by a qualified testing agency, and marked for intended location and application.

B. ARI Compliance:

1. Capacity ratings for air-to-air energy recovery equipment shall comply with ARI 1060, "Performance Rating of Air-to-Air Heat Exchangers for Energy Recovery Ventilation Equipment."
2. Capacity ratings for air coils shall comply with ARI 410, "Forced-Circulation Air- Cooling and Air-Heating Coils."

C. ASHRAE Compliance:

1. Applicable requirements in ASHRAE 62.1, Section 5 - "Systems and Equipment" and Section 7 - "Construction and Startup."
2. Capacity ratings for air-to-air energy recovery equipment shall comply with ASHRAE 84, "Method of Testing Air-to-Air Heat Exchangers."

D. UL Compliance:

1. Packaged heat recovery ventilators shall comply with requirements in UL 1812, "Ducted Heat Recovery Ventilators"; or UL 1815, "Nonducted Heat Recovery Ventilators."
2. Electric coils shall comply with requirements in UL 1995, "Heating and Cooling Equipment."

1.8 WARRANTY

A. Special Warranty: Manufacturer's standard form in which manufacturer agrees to repair or replace components of air-to-air energy recovery equipment that fail in materials or workmanship within specified warranty period.

1. Warranty Period for Fixed-Plate Total Heat Exchangers: 10 years.

PART 2 - PRODUCTS

2.1 FIXED-PLATE TOTAL HEAT EXCHANGERS

A. List of Approved Manufacurers:
1. Mitsubishi-Lossnay

2. FanTech
3. Greenheck
4. Lifebreath

B. Casing: Galvanized steel.

C. Plates: Evenly spaced and sealed and arranged for counter airflow.

1. Plate Material: Chemically treated paper with selective hydroscopicity and moisture permeability, and gas barrier properties.

D. Bypass Plenum: Within casing, with gasketed face-and-bypass dampers having operating rods extended outside casing.

E. Disposable Panel Filters:

1. Comply with NFPA 90A.
2. Filter Holding Frames: Arranged for flat or angular orientation, with access doors on both sides of unit. Filters shall be removable from one side or lift out from access plenum.
3. Factory-fabricated, viscous-coated, flat-panel type.
4. Thickness: 1 inch.
5. Minimum Arrestance: 80, according to ASHRAE 52.1.
6. MERV: 8, according to ASHRAE 52.2.
7. Media: Interlaced glass fibers sprayed with nonflammable adhesive and antimicrobial agent.
8. Frame: Galvanized steel with metal grid on outlet side, steel rod grid on inlet side, hinged, and with pull and retaining handles.

2.2 CAPACITIES AND CHARACTERISTICS

1. Refer to schedules.

PART 3 - EXECUTION

3.1 EXAMINATION

A. Examine areas and conditions, with Installer present, for compliance with requirements for installation tolerances and other conditions affecting performance of the Work.

B. Examine casing insulation materials and filter media before air-to-air energy recovery equipment installation. Reject insulation materials and filter media that are wet, moisture damaged, or mold damaged.

C. Examine roughing-in for electrical services to verify actual locations of connections before installation.

D. Proceed with installation only after unsatisfactory conditions have been corrected.

3.2 INSTALLATION

A. Install fixed-plate heat exchangers so supply and exhaust airstreams flow in opposite directions.

1. Install duct access doors in both supply and exhaust ducts, both upstream and downstream, for access to heat exchanger.

B. Suspended Units: Suspend and brace units from structural-steel support frame using threaded steel rods and spring hangers. Comply with requirements for vibration isolation devices specified in Section 230548 "Vibration and Seismic Controls for HVAC."

C. Install units with clearances for service and maintenance.

D. Install new filters at completion of equipment installation and before testing, adjusting, and balancing.

E. Pipe drains from drain pans; use ASTM B 88, Type L, drawn-temper copper water tubing with soldered joints, same size as condensate drain connection.

F. Pipe drains from drain pans; use ASTM D 1785, Schedule 40 PVC pipe and solvent-welded fittings, same size as condensate drain connection.

1. Requirements for Low-Emitting Materials:

a. PVC solvent cement shall have a VOC content of 510 g/L or less when calculated according to 40 CFR 59, Subpart D (EPA Method 24).
b. Adhesive primer shall have a VOC content of 550 g/L or less when calculated according to 40 CFR 59, Subpart D (EPA Method 24).

2. Requirements for Low-Emitting Materials: Solvent cement and adhesive primer shall comply with the testing and product requirements of the California Department of Health Services' "Standard Practice for the Testing of Volatile Organic Emissions from Various Sources Using Small-Scale Environmental Chambers."

3.3 CONNECTIONS

A. Comply with requirements for ductwork specified in Section 233113 "Metal Ducts."

B. Install electrical devices furnished with units but not factory mounted.

3.4 FIELD QUALITY CONTROL

A. Manufacturer's Field Service: Engage a factory-authorized service representative to inspect, test, and adjust components, assemblies, and equipment installations, including connections.

B. Perform tests and inspections.

1. Manufacturer's Field Service: Engage a factory-authorized service representative to inspect components, assemblies, and equipment installations, including connections, and to assist in testing.

C. Tests and Inspections:

1. Operational Test: After electrical circuitry has been energized, start units to confirm proper motor rotation and unit operation.
2. Adjust seals and purge.
3. Test and adjust controls and safeties. Replace damaged and malfunctioning controls and equipment.
4. Set initial temperature and humidity set points.
5. Set field-adjustable switches and circuit-breaker trip ranges as indicated.

D. Air-to-air energy recovery equipment will be considered defective if it does not pass tests and inspections.

E. Prepare test and inspection reports.

3.5 DEMONSTRATION

A. Train Owner's maintenance personnel to adjust, operate, and maintain air-to-air energy recovery units.

END OF SECTION 237200

SECTION 237313 - MODULAR INDOOR CENTRAL-STATION AIR-HANDLING UNITS

PART 1 - GENERAL

1.1 RELATED DOCUMENTS

A. Drawings and general provisions of the Contract, including General and Supplementary Conditions and Division 01 Specification Sections, apply to this Section.

1.2 SUMMARY

A. Section Includes:

1. Variable-air-volume, single-zone air-handling units.

1.3 ACTION SUBMITTALS

A. Product Data: For each air-handling unit indicated.

1. Unit dimensions and weight.
2. Cabinet material, metal thickness, finishes, insulation, and accessories.
3. Fans:
   a. Certified fan-performance curves with system operating conditions indicated.
   b. Certified fan-sound power ratings.
   c. Fan construction and accessories.
   d. Motor ratings, electrical characteristics, and motor accessories.
4. Certified coil-performance ratings with system operating conditions indicated.
5. Dampers, including housings, linkages, and operators.
6. Filters with performance characteristics.

1.4 INFORMATIONAL SUBMITTALS

A. Coordination Drawings: Floor plans and other details, drawn to scale, on which the following items are shown and coordinated with each other, using input from installers of the items involved:

1. Mechanical-room layout and relationships between components and adjacent structural and mechanical elements.
2. Support location, type, and weight.
3. Field measurements.

B. Source quality-control reports.

C. Field quality-control reports.

1.5 CLOSEOUT SUBMITTALS

A. Operation and Maintenance Data: For air-handling units to include in emergency, operation, and maintenance manuals.

1.6 QUALITY ASSURANCE

A. Electrical Components, Devices, and Accessories: Listed and labeled as defined in NFPA 70, by a qualified testing agency, and marked for intended location and application.

B. NFPA Compliance: Comply with NFPA 90A for design, fabrication, and installation of air-handling units and components.

C. ARI Certification: Air-handling units and their components shall be factory tested according to ARI 430, "Central-Station Air-Handling Units," and shall be listed and labeled by ARI.

D. ASHRAE Compliance: Applicable requirements in ASHRAE 62.1, Section 5 - "Systems and Equipment" and Section 7 - "Construction and Startup."

E. ASHRAE/IESNA 90.1 Compliance: Applicable requirements in ASHRAE/IESNA 90.1, Section 6 - "Heating, Ventilating, and Air-Conditioning."

F. Comply with NFPA 70.

1.7 COORDINATION

A. Coordinate sizes and locations of concrete bases with actual equipment provided.

B. Coordinate sizes and locations of structural-steel support members, if any, with actual equipment provided.

PART 2 - PRODUCTS

2.1 MANUFACTURERS

A. Available Manufacturers: Subject to compliance with requirements, manufacturers offering products that may be incorporated into the Work include, but are not limited to, the following:

B. Manufacturers: Subject to compliance with requirements, provide products by one of the following:

1. Trane
2. Daikin
3. Carrier
4. Approved equal.

2.2 UNIT CASINGS

A. General Fabrication Requirements for Casings:

1. Forming: Form walls, roofs, and floors with at least two breaks at each joint.
2. Casing Joints: Sheet metal screws or pop rivets.
3. Sealing: Seal all joints with water-resistant sealant.
4. Factory Finish for Steel Casings: Apply manufacturer's standard primer immediately after cleaning and pretreating.
5. Airstream Surfaces: Surfaces in contact with the airstream shall comply with requirements in ASHRAE 62.1.

B. Casing Insulation and Adhesive:

1. Materials: ASTM C 1071, Type II.
2. Location and Application: Factory applied with adhesive and mechanical fasteners to the internal surface of section panels downstream from, and including, the cooling-coil section.
   a. Liner Adhesive: Comply with ASTM C 916, Type I.
   b. Mechanical Fasteners: Galvanized steel, suitable for adhesive attachment, mechanical attachment, or welding attachment to duct without damaging liner when applied as recommended by manufacturer and without causing leakage in cabinet.
   c. Liner materials applied in this location shall have air-stream surface coated with a temperature-resistant coating or faced with a plain or coated fibrous mat or fabric depending on service-air velocity.
3. Location and Application: Encased between outside and inside casing.

C. Inspection and Access Panels and Access Doors:

1. Panel and Door Fabrication: Formed and reinforced, single- or double-wall and insulated panels of same materials and thicknesses as casing.
2. Inspection and Access Panels:
   a. Fasteners: Two or more camlock type for panel lift-out operation. Arrangement shall allow panels to be opened against air-pressure differential.
   b. Gasket: Neoprene, applied around entire perimeters of panel frames.
   c. Size: Large enough to allow inspection and maintenance of air-handling unit's internal components.
3. Locations and Applications:
   a. Fan Section: Inspection and access panels.
   b. Access Section: Doors.
   c. Coil Section: Inspection and access panel.
   d. Damper Section: Inspection and access panels.

D. Condensate Drain Pans:

1. Fabricated with one percent slope in at least two planes to collect condensate from cooling coils (including coil piping connections, coil headers, and return bends) and from humidifiers and to direct water toward drain connection.
   a. Length: Extend drain pan downstream from leaving face to comply with ASHRAE 62.1.
   b. Depth: A minimum of 2 inches (50 mm) deep.
2. Single-wall, stainless-steel sheet.

3. Drain Connection: Located at lowest point of pan and sized to prevent overflow. Terminate with threaded nipple on both ends of pan.
   a. Minimum Connection Size: NPS ¾”.

2.3 FAN, DRIVE, AND MOTOR SECTION

A. Fan and Drive Assemblies: Statically and dynamically balanced and designed for continuous operation at maximum-rated fan speed and motor horsepower.

1. Shafts: Designed for continuous operation at maximum-rated fan speed and motor horsepower, and with field-adjustable alignment.
   a. Turned, ground, and polished hot-rolled steel with keyway. Ship with a protective coating of lubricating oil.
   b. Designed to operate at no more than 70 percent of first critical speed at top of fan's speed range.

B. Centrifugal Fan Housings: Formed- and reinforced-steel panels to form curved scroll housings with shaped cutoff and spun-metal inlet bell.

1. Bracing: Steel angle or channel supports for mounting and supporting fan scroll, wheel, motor, and accessories.
2. Horizontal-Flanged, Split Housing: Bolted construction.
3. Housing for Supply Fan: Attach housing to fan-section casing with metal-edged flexible duct connector.

C. Plenum Fan Housings: Steel frame and panel; fabricated without fan scroll and volute housing.

D. Backward-Inclined, Centrifugal Fan Wheels: Single-width-single-inlet and double-width-double.

E. Motor: Comply with NEMA designation, temperature rating, service factor, enclosure type, and efficiency requirements for motors specified in Section 230513 "Common Motor Requirements for HVAC Equipment."

1. Enclosure Type: Totally enclosed, fan cooled.
2. NEMA Premium (TM) efficient motors as defined in NEMA MG 1.
3. Motor Sizes: Minimum size as indicated. If not indicated, large enough so driven load will not require motor to operate in service factor range above 1.0.
4. Controllers, Electrical Devices, and Wiring: Comply with requirements for electrical devices and connections specified in electrical Sections.
5. Mount unit-mounted disconnect switches on [exterior] [interior] of unit.
6. <Insert unique motor characteristics>.

2.4 COIL SECTION

A. General Requirements for Coil Section:

1. Comply with ARI 410.
2. Fabricate coil section to allow removal and replacement of coil for maintenance and to allow in-place access for service and maintenance of coil(s).
3. For multizone units, provide air deflectors and air baffles to balance airflow across coils.
4. Coils shall not act as structural component of unit.

5. Seismic Fabrication Requirements: Fabricate coil section, internal mounting frame and attachment to coils, and other coil section components with reinforcement strong enough to withstand seismic forces defined in Section 230548 "Vibration and Seismic Controls for HVAC" when coil-mounting frame and air-handling-unit mounting frame are anchored to building structure.

2.5 AIR FILTRATION SECTION

A. General Requirements for Air Filtration Section:

1. Comply with NFPA 90A.
2. Provide minimum arrestance according to ASHRAE 52.1, and a minimum efficiency reporting value (MERV) according to ASHRAE 52.2.
3. Provide filter holding frames arranged for flat or angular orientation, with access doors on both sides of unit. Filters shall be removable from one side or lifted out from access plenum.

B. Disposable Panel Filters:

1. Factory-fabricated, viscous-coated, flat-panel type.
2. Thickness: 1 inch (25 mm).

2.6 CAPACITIES AND CHARACTERISTICS: Refer to schedules

2.7 SOURCE QUALITY CONTROL

A. Fan Sound-Power Level Ratings: Comply with AMCA 301, "Methods for Calculating Fan Sound Ratings from Laboratory Test Data." Test fans according to AMCA 300, "Reverberant Room Method for Sound Testing of Fans." Fans shall bear AMCA-certified sound ratings seal.

B. Fan Performance Rating: Factory test fan performance for airflow, pressure, power, air density, rotation speed, and efficiency. Rate performance according to AMCA 210, "Laboratory Methods of Testing Fans for Aerodynamic Performance Rating."

C. Refrigerant Coils: Factory tested to 450 psig (3105 kPa) according to ARI 410 and ASHRAE 33.

PART 3 - EXECUTION

3.1 EXAMINATION

A. Examine areas and conditions, with Installer present, for compliance with requirements for installation tolerances and other conditions affecting performance of the Work.

B. Examine casing insulation materials and filter media before air-handling unit installation. Reject insulation materials and filter media that are wet, moisture damaged, or mold damaged.

C. Examine roughing-in for steam, hydronic, and condensate drainage piping systems and electrical services to verify actual locations of connections before installation.

D. Proceed with installation only after unsatisfactory conditions have been corrected.

3.2 INSTALLATION

A. Equipment Mounting:

1. Comply with requirements for vibration isolation and seismic control devices specified in Section 230548 "MECHANICAL VIBRATION CONTROLS"

B. Arrange installation of units to provide access space around air-handling units for service and maintenance.

C. Do not operate fan system until filters (temporary or permanent) are in place. Replace temporary filters used during construction and testing, with new, clean filters.

D. Install filter-gage, static-pressure taps upstream and downstream of filters. Mount filter gages on outside of filter housing or filter plenum in accessible position. Provide filter gages on filter banks, installed with separate static-pressure taps upstream and downstream of filters.

3.3 CONNECTIONS

A. Comply with requirements for piping specified in other Sections. Drawings indicate general arrangement of piping, fittings, and specialties.

B. Install piping adjacent to air-handling unit to allow service and maintenance.

C. Connect piping to air-handling units mounted on vibration isolators with flexible connectors.

D. Connect condensate drain pans using NPS 3/4, ASTM B 88, Type M (ASTM B 88M, Type C) copper tubing. Extend to nearest equipment or floor drain. Construct deep trap at connection to drain pan and install cleanouts at changes in direction.

E. Refrigerant Piping: Comply with applicable requirements in Section 232300 "Refrigerant Piping." Install shutoff valve and union or flange at each supply and return connection.

F. Connect duct to air-handling units with flexible connections. Comply with requirements in Section 233300 "Air Duct Accessories."

3.4 FIELD QUALITY CONTROL

A. Manufacturer's Field Service: Engage a factory-authorized service representative to inspect, test, and adjust components, assemblies, and equipment installations, including connections.

B. Perform tests and inspections.

1. Manufacturer's Field Service: Engage a factory-authorized service representative to inspect components, assemblies, and equipment installations, including connections, and to assist in testing.

C. Tests and Inspections:

1. Leak Test: After installation, fill water and steam coils with water, and test coils and connections for leaks.
2. Charge refrigerant coils with refrigerant and test for leaks.
3. Fan Operational Test: After electrical circuitry has been energized, start units to confirm proper motor rotation and unit operation.
4. Test and adjust controls and safeties. Replace damaged and malfunctioning controls and equipment.

D. Air-handling unit or components will be considered defective if unit or components do not pass tests and inspections.

E. Prepare test and inspection reports.

3.5 STARTUP SERVICE

A. Engage a factory-authorized service representative to perform startup service.

1. Complete installation and startup checks according to manufacturer's written instructions.
2. Verify that shipping, blocking, and bracing are removed.
3. Verify that unit is secure on mountings and supporting devices and that connections to piping, ducts, and electrical systems are complete. Verify that proper thermal-overload protection is installed in motors, controllers, and switches.
4. Verify proper motor rotation direction, free fan wheel rotation, and smooth bearing operations. Reconnect fan drive system, align belts, and install belt guards.
5. Verify that bearings, pulleys, belts, and other moving parts are lubricated with factory-recommended lubricants.
6. Verify that zone dampers fully open and close for each zone.
7. Verify that outdoor- and return-air mixing dampers open and close and maintain minimum outdoor-air setting.
8. Comb coil fins for parallel orientation.
9. Verify that proper thermal-overload protection is installed for electric coils.
10. Install new, clean filters.
11. Verify that manual and automatic volume control and fire and smoke dampers in connected duct systems are in fully open position.

B. Starting procedures for air-handling units include the following:

1. Energize motor; verify proper operation of motor, drive system, and fan wheel. Adjust fan to indicated rpm
2. Measure and record motor electrical values for voltage and amperage.
3. Manually operate dampers from fully closed to fully open position and record fan performance.

3.6 ADJUSTING

A. Adjust damper linkages for proper damper operation.

B. Comply with requirements in Section 230593 "Testing, Adjusting, and Balancing for HVAC" for air-handling system testing, adjusting, and balancing.

3.7 CLEANING

A. After completing system installation and testing, adjusting, and balancing air-handling unit and air-distribution systems and after completing startup service, clean air-handling units internally to remove foreign material and construction dirt and dust.

B. Clean fan wheels, cabinets, dampers, coils, and filter housings, and install new, clean filters.

3.8 DEMONSTRATION

A. Engage a factory-authorized service representative to train Owner's maintenance personnel to adjust, operate, and maintain air-handling units.

END OF SECTION 237313

SECTION 237413 - PACKAGED ROOFTOP HVAC UNITS

PART 1 GENERAL

1.01 SECTION INCLUDES

A. Packaged rooftop HVAC units.
B. Heat exchangers.
C. Refrigeration components.
D. Unit operating controls.
E. Powered Exhaust.
F. Roof Curbs.
G. Electrical power connections.
H. Operation and maintenance service.

1.02 RELATED SECTIONS

A. Section 230553 – Mechanical Identification
B. Section 230593 - Testing, Adjusting, and Balancing for HVAC
C. Section 230713 - Duct Insulation.
D. DIV 23 & 26 Sections

1.03 REFERENCES

A. NFPA 90 A & B - Installation of Air Conditioning and Ventilation Systems and Installation of Warm Air Heating and Air Conditioning Systems.

B. ANSI/ASHRAE 15 - Safety Code for Mechanical Refrigeration.

C. AHRI 340 - Commercial and Industrial Unitary Heat pump Equipment.

D. AHRI 360 - Unitary Air-Conditioning Equipment.

E. ANSI/ASHRAE 37 - Testing Unitary Air Conditioning and Heat Pump Equipment.

F. ANSI/ASHRAE/IESNA 90.1 (Latest Edition) - Energy Standard for New Buildings Except Low-Rise Residential Buildings.

G. ANSI Z21.47/UL1995 - Unitary Air Conditioning Standard for safety requirements.

H. California Energy Commission Administrative Code - Title 20/24 - Establishes the minimum efficiency requirements for HVAC equipment installed in new buildings in the State of California.

I. AHRI 370 - Sound Rating of Large Outdoor Refrigerating and Air Conditioning Equipment

J. ANSI/NFPA 70

K. International Fuel Gas Code

1.04 SUBMITTALS

A. Submit unit performance data including capacity, nominal and operating performance.

B. Submit Mechanical Specifications for unit and accessories describing construction, components and options.

C. Submit shop drawings indicating overall dimensions as well as installation, operation and services clearances. Indicate lift points and recommendations and center of gravity. Indicate unit shipping, installation and operating weights including dimensions.

D. Submit data on electrical requirements and connection points. Include recommended wire and fuse sizes or MCA, sequence of operation, safety and start-up instructions.

E. Shop drawings submitted for approval shall be accompanied by a copy of the purchase agreement between the Contractor and an authorized service representative of the manufacturer for check, test and start up and first year service.

1.05 OPERATION AND MAINTENANCE DATA

A. Submit operation and maintenance data.

B. Include manufacturer's descriptive literature, start-up and operating instructions, installation instructions, and maintenance procedures.

1.06 DELIVERY, STORAGE and HANDLING

A. Comply with manufacturer's installation instructions for rigging, unloading, and transporting units.

B. Protect units from physical damage. Leave factory shipping covers in place until installation.

1.07 WARRANTY

A. Provide a full parts warranty for two years from start-up.
B. Provide five-year extended parts warranty for compressors.
C. Provide ten-year for heat exchanger parts warranty.

1.08 REGULATORY REQUIREMENTS

A. Unit shall conform to ANSI Z21.47/UL1995 for construction of packaged air conditioner and shall have U.L. label affixed to rooftop package.

1. In the event the unit is not UL approved, the manufacturer must, at his expense, provide for a field inspection by a UL representative to verify conformance to UL standards. If necessary, contractor shall perform modifications to the unit to comply with UL, as directed by the UL representative, at no additional expense to the Owner.

1.09 EXTRA MATERIALS

A. Provide two (2) additional set of filters.
B. Furnish one additional complete set of fan motor belts.

1.10 SUMMARY

A. The contractor shall furnish and install packaged rooftop air conditioning units as shown and as scheduled on the contract documents. The units shall be installed in accordance with this specification and perform at the conditions specified, scheduled or as shown on the contract drawings.

PART 2 PRODUCTS

2.01 MANUFACTURERS

A. GENERAL

1. Manufacturer of packaged unitary rooftop products shall have had a minimum of 20 years successful experience in the manufacture and service support of the rooftop packages specified herein. Manufacturers with less than 20 years experience in the production of rooftop units of the sizes and types specified shall not be acceptable.

B. APPROVED MANUFACTURERS

1. Trane
2. Aaon
3. Daikin

Note: In case any of the manufacturers other than the basis of design are submitted for use, the contractor will be responsible for all changes associated with that submission, including providing shop drawings, signed structural calculations by a licensed engineer, structural reinforcements, etc.

C. SUBSTIBUTIONS:

1. Submission for substitution is required a minimum of 10 working days prior to bid date as indicated under the general and/or supplemental conditions of these specifications. Bidding contractor shall be responsible for electrical and mechanical and structural modifications required when substituting a product other than the specified product. It shall be the responsibility of the bidding contractor to make the specifier aware of any modifications. As built drawing changes is the responsibility of the contractor submitting the substitution.

2.02 GENERAL UNIT DESCRIPTION

1. Packaged rooftop unit shall include compressors, evaporator coils, filters, supply fans, dampers, air-cooled condenser coils, condenser fans, reheat coil, gas heaters (RTU-10), exhaust fans, and unit controls.
2. Unit shall be factory assembled and tested including leak testing of the DX coils, pressure testing of the refrigeration circuit, and run testing of the completed unit. Run test report shall

be supplied with the unit in the service compartment's literature pocket.

3. Unit shall have decals and tags to indicate lifting and rigging, service areas and caution areas for safety and to assist service personnel.
4. Unit components shall be labeled, including refrigeration system components and electrical and controls components.
5. Estimated sound power levels (dB) shall be shown on the unit ratings sheet.
6. Installation, Operation, and Maintenance manual shall be supplied within the unit.
7. Laminated color-coded wiring diagram shall match factory installed wiring and shall be affixed to the interior of the control compartment's hinged access door.
8. Unit nameplate shall be provided in two locations on the unit, affixed to the exterior of the unit and affixed to the interior of the control compartment's hinged access door.

2.03 CONSTRUCTION

1. All cabinet walls, access doors, and roof shall be fabricated of double wall, impact resistant, rigid polyurethane foam panels.
2. Unit insulation shall have a minimum thermal resistance R-value of 13. Foam insulation shall have a minimum density of 2 pounds/cubic foot and shall be tested in accordance with ASTM D1929-11 for a minimum flash ignition temperature of 610°F.
3. Unit construction shall be double wall with G90 galvanized steel on both sides and a thermal break. Double wall construction with a thermal break prevents moisture accumulation on the insulation, provides a cleanable interior, prevents heat transfer through the panel, and prevents exterior condensation on the panel.
4. Unit shall be designed to reduce air leakage and infiltration through the cabinet. Cabinet leakage shall not exceed 1% of total airflow when tested at 3 times the minimum external static pressure provided in AHRI Standard 340/360. Panel deflection shall not exceed L/240 ratio at 125% of design static pressure, at a maximum 8 inches of positive or negative static pressure, to reduce air leakage. Deflection shall be measured at the midpoint of the panel height and width. Continuous sealing shall be included between panels and between access doors and openings to reduce air leakage. Piping and electrical conduit through cabinet panels shall include sealing to reduce air leakage.
5. Roof of the air tunnel shall be sloped to provide complete drainage. Cabinet shall have rain break overhangs above access doors.
6. Access to filters, dampers, cooling coils, reheat coil, heaters, exhaust fans, energy recovery wheels, compressors, and electrical and controls components shall be through hinged access doors with quarter turn, zinc cast, lockable handles. Full length stainless steel piano hinges shall be included on the doors.
7. Exterior paint finish shall be capable of withstanding at least 2,500 hours, with no visible corrosive effects, when tested in a salt spray and fog atmosphere in accordance with ASTM B 117-95 test procedure.
8. Units with cooling coils shall include double sloped 304 stainless steel drain pans.
9. Unit shall be provided with base discharge and return air openings. All openings through

the base pan of the unit shall have upturned flanges of at least 1/2 inch in height around the opening.

10. Unit shall include lifting lugs on the top of the unit.
11. Unit base pan shall be provided with 1/2 inch thick foam insulation.

C. ELECTRICAL

1. Unit shall be provided with factory installed and factory wired, non-fused disconnect switch.
2. Unit shall be provided with a factory installed and factory wired 115V, 13 amp GFI outlet disconnect switch in the unit control panel.
3. Unit shall be provided with phase and brown out protection which shuts down all motors in the unit if the electrical phases are more than 10% out of balance on voltage, the voltage is more than 10% under design voltage or on phase reversal.

D. SUPPLY FANS

1. Unit shall include direct drive, unhoused, backward curved, plenum supply fans.
2. Blowers and motors shall be dynamically balance and mounted on rubber isolators.
3. Motors shall be premium efficiency ODP with ball bearings rated for 200,000 hours service with external lubrication points.
4. Variable frequency drives shall be factory wired and mounted in the unit.

E. POWER EXHAUST FANS

1. Exhaust dampers shall be sized for 100% relief.
2. Fans and motors shall be dynamically balanced.
3. Unit shall include barometric relief dampers.
4. Motors shall be premium efficiency ODP with ball bearings rated for 200,000 hours service with external lubrication points.
5. Access to exhaust fans shall be through double wall, hinged access doors with quarter turn lockable handles.
6. Unit shall include belt driven, unhoused, backward curved, plenum exhaust fans.
7. Variable frequency drives shall be factory wired and mounted in the unit. Fan motors shall be premium efficiency.

F. COOLING COILS

1. Evaporator Coils
   a. Coils shall be designed for use with R-454B refrigerant and constructed of copper tubes with aluminum fins mechanically bonded to the tubes and galvanized steel end casings. Fin design shall be sine wave rippled.
   2. Coils shall have interlaced circuitry and shall be 6 row high capacity.
   3. Coils shall be hydrogen or helium leak tested.
   4. Coils shall be furnished with factory installed expansion valves.

G. REFRIGERATION SYSTEM

1. Unit shall be factory charged with R-454B refrigerant.
2. Compressors shall be scroll type with thermal overload protection and carry a 5 year non-prorated warranty, from the date of original equipment shipment from the factory.
3. Compressors shall be mounted in an isolated service compartment which can be accessed without affecting unit operation. Lockable hinged compressor access doors shall be fabricated of double wall, rigid polyurethane foam injected panels to prevent the transmission of noise outside the cabinet.
4. Compressors shall be isolated from the base pan with the compressor manufacturer's recommended rubber vibration isolators, to reduce any transmission of noise from the compressors into the building area.
5. Each refrigeration circuit shall be equipped with expansion valve type refrigerant flow control.
6. Each refrigeration circuit shall be equipped with automatic reset low pressure and manual reset high pressure refrigerant safety controls, Schrader type service fittings on both the high pressure and low pressure sides and a factory installed replaceable core liquid line filter driers.
7. Unit shall include a variable capacity scroll compressor on the lead refrigeration circuit which shall be capable of modulation from 10-100% of its capacity.
8. Lead refrigeration circuit shall be provided with hot gas reheat coil, modulating valves, electronic controller, supply air temperature sensor and a control signal terminal which allow the unit to have a dehumidification mode of operation, which includes supply air temperature control to prevent supply air temperature swings and overcooling of the space.
9. Lag refrigeration circuit shall be provided with factory installed hot gas bypass to protect against evaporator frosting and to prevent excessive compressor cycling.
10. The factory installed controls shall include a 3 minute off delay timer to prevent compressor short cycling. The controls shall also include an adjustable, 20 second delay timer for each additional capacity stage to prevent multiple capacity stages from starting simultaneously and adjustable compressor lock out.

H. CONDENSERS

1. Air-Cooled Condenser
   a. Condenser fans shall be a vertical discharge, axial flow, direct drive fans.
   b. Coils shall be designed for use with R-454B refrigerant. Coils shall be multi-pass and fabricated from aluminum microchannel tubes or coils shall be constructed of copper tubes with aluminum (copper) fins mechanically bonded to the tubes and aluminum end casings. Fin design of copper tube coils shall be sine wave rippled.
   c. Coils shall be designed for a minimum of 10°F of refrigerant sub-cooling.
   d. Coils shall be hydrogen or helium leak tested.
   e. Condenser fans shall be high efficiency electrically commutated motor driven with factory installed head pressure control module. Condenser airflow shall continuously modulate based on head pressure and cooling operation shall be allowed down to 35°F with adjustable compressor lockout.

I. GAS HEATING (RTUs)

1. Stainless steel heat exchanger furnace shall carry a 25-year non-prorated warranty, from the date of original equipment shipment from the factory.
2. Gas furnace shall consist of stainless-steel heat exchangers with multiple concavities, an induced draft blower and an electronic pressure switch to lockout the gas valve until the combustion chamber is purged and combustion airflow is established.
3. Furnace shall include a gas ignition system consisting of an electronic igniter to a pilot system, which will be continuous when the heater is operating, but will shut off the pilot when heating is not required.
4. Unit shall include a single gas connection and have gas supply piping entrances in the unit base for through-the-curb gas piping and in the outside cabinet wall for across the roof gas piping.
5. High Turndown Modulating Natural Gas Furnace shall be equipped with modulating gas valves, adjustable speed combustion blowers, stainless steel tubular heat exchangers, and electronic controller. Combustion blowers and gas valves shall be capable of modulation. Electronic controller includes a factory wired, field installed supply air temperature sensor. Sensor shall be field installed in the supply air ductwork. Supply air temperature setpoint shall be adjustable on the electronic controller within the controls compartment. Gas heater shall be capable of capacity turndown ratio as shown on the unit rating sheet. Heat trace shall be include on the condensate drain line.

J. FILTERS

1. Unit shall include 4-inch thick, pleated panel filters with an ASHRAE efficiency of 80% and a MERV rating of 13, upstream of the cooling coil. Unit shall also include 2-inch thick, pleated panel pre filters with an ASHRAE efficiency of 30% and MERV rating of 8, upstream of the 4-inch standard filters.
2. Unit shall include a clogged filter switch.
3. Units shall include a Magnehelic gauge mounted in the controls compartment.

K. OUTSIDE AIR/ECONOMIZER

1. Unit shall include 0-100% economizer consisting of a motor operated outside air damper and return air damper assembly constructed of extruded aluminum, hollow core, airfoil blades with rubber edge seals and aluminum end seals. Damper blades shall be gear driven and designed to have no more than 20 cfm of leakage per sq ft. at 4 in. w.g. air pressure differential across the damper. Low leakage dampers shall be Class 2 AMCA certified, in accordance with AMCA Standard 511. Damper assembly shall be controlled by spring return DDC actuator. Unit shall include outside air opening bird screen, outside air hood, and barometric relief dampers.
2. Economizer shall be furnished with return air CO_2 override.

N. ACCESSORIES

1. Unit shall be provided with a safety shutdown terminal block for field installation of a smoke detector which shuts off the unit's control circuit.
2. Condenser coil guards with louver panels.

3. Phase and Voltage Monitor: shall protects 3-phase equipment from phase loss, phase reversal, and low voltage. Any fault condition shall produce a Failure Indicator LED, and send the unit into an emergency stop condition. cULus approved

2.04 CONTROLS

A. Factory Installed and Factory Provided Controller

1. Unit controller shall be capable of controlling all features and options of the unit. Controller shall be factory installed in the unit controls compartment and factory tested. Controller shall be capable of standalone operation with unit configuration, setpoint adjustment, sensor status viewing, unit alarm viewing, and occupancy scheduling available without dependence on a building management system.

2. Controller shall have an onboard clock and calendar functions that allow for occupancy scheduling.

3. Controller shall include non-volatile memory to retain all programmed values without the use of a battery, in the event of a power failure.

4. Single Zone VAV Controller

a. Unit shall utilize a variable capacity compressor system and a variable speed fan system to modulate the cooling and airflow as required in meeting the space temperature needs and to save unit operating energy. Unit fan speed shall modulate based on space temperature, not supply air pressure.

b. Units ordered with modulating gas, shall be capable of modulating fan speed in both the heating and cooling mode.

c. With modulating hot gas reheat, unit shall modulate cooling and hot gas reheat as efficiently as possible, to meet space humidity loads and prevent supply air temperature swings and overcooling of the space.

d. Unit shall be provided with supply air temperature control. Mixing boxes and bypass ducts shall not be required for operation as a single zone VAV system.

5. Unit configuration, setpoint adjustment, sensor status viewing, unit alarm viewing, and occupancy scheduling shall be accomplished with connection to interface module with LCD screen and input keypad, interface module with touch screen, or with connection to PC with free configuration software. Controller shall be capable of connection with other factory installed and factory provided unit controllers with individual unit configuration, setpoint adjustment, sensor status viewing, and occupancy scheduling available from a single unit. Connection between unit controllers shall be with a modular cable. Controller shall be capable of communicating and integrating with a LonWorks network.

B. Isolation relays shall be factory installed.

C. Unit(s) shall be provided with a safety shutdown terminal block for field installation of smoke detectors which shall shutoff the unit control circuit.

2.05 ROOF CURB

A. Each unit shall be provided with a spring vibration roof curb, minimum 16 gauge perimeter made of zinc coated steel with supply and return air gasketing and wood nailer strips.

B. All roof curbs shall be for field installed by Contractor.

C. Curbs shall be manufactured in accordance with the National Roofing Contractors Association guidelines.

PART 3 EXECUTION

3.01 EXAMINATION

A. Contractor shall verify that roof and surfaces is ready to receive work and opening dimensions are as indicated on shop drawings.

B. Contractor shall verify that proper power supply is available.

3.02 INSTALLATION

A. Installation, Operation, and Maintenance manual shall be supplied with the unit.

2. Installing contractor shall install unit, including field installed components, in accordance with Installation, Operation, and Maintenance manual instructions.

3. Start up and maintenance requirements shall be complied with to ensure safe and correct operation of the unit.

3.02 CONNECTIONS

A. Piping installation requirements are specified in other Division 23 Sections. Drawings indicate general arrangement of piping, fittings, and specialties.

B. Install piping adjacent to machine to allow service and maintenance.

1. Gas Piping: Comply with applicable requirements in Division 22 Section "Facility Natural-Gas Piping." Connect gas piping to burner, full size of gas train inlet, and connect with union and shutoff valve with sufficient clearance for burner removal and service.

C. Duct installation requirements are specified in other Division 23 Sections. Drawings indicate the general arrangement of ducts. The following are specific connection requirements:

1. Install ducts to termination in roof curb.
2. Remove roof decking only as required for passage of ducts. Do not cut out decking under entire roof curb.
3. Connect supply ducts to rooftop unit with flexible duct connectors specified in Division 23 Section "Duct Accessories."
4. Terminate return-air duct through roof structure and insulate space between roof and bottom of unit with 2-inch- (50-mm-) thick, acoustic duct liner.

D. Electrical System Connections: Comply with applicable requirements in Division 23 Sections for power wiring, switches, and motor controls.

E. Ground equipment according to Division 26 Section "Grounding and Bonding for Electrical Systems."

F. Tighten electrical connectors and terminals according to manufacturer's published torque-tightening values. If manufacturer's torque values are not indicated, use those specified in UL 486A and UL 486B.

3.03 FIELD QUALITY CONTROL

A. Manufacturer's Field Service: Engage a factory-authorized service representative to inspect, test, and adjust field-assembled components and equipment installation, including connections, and to assist in field testing. Report results in writing.

B. Perform the following field quality-control tests and inspections and prepare test reports:

1. After installing rooftop air conditioners and after electrical circuitry has been energized, test units for compliance with requirements.
2. Inspect for and remove shipping bolts, blocks, and tie-down straps.
3. Operational Test: After electrical circuitry has been energized, start units to confirm proper motor rotation and unit operation.
4. Test and adjust controls and safeties. Replace damaged and malfunctioning controls and equipment.

C. Remove malfunctioning units, replace with new units, and retest as specified above.

3.04 STARTUP SERVICE

A. Engage a factory-authorized service representative to perform startup service.

B. Complete installation and startup checks according to manufacturer's written instructions and do the following:

1. Inspect for visible damage to unit casing.
2. Inspect for visible damage to furnace combustion chamber.
3. Inspect for visible damage to compressor, air-cooled outside coil, and fans.
4. Inspect internal insulation.
5. Verify that labels are clearly visible.
6. Verify that clearances have been provided for servicing.
7. Verify that controls are connected and operable.
8. Verify that filters are installed.
9. Clean outside coil and inspect for construction debris.
10. Clean furnace flue and inspect for construction debris.
11. Connect and purge gas line.
12. Adjust vibration isolators.
13. Inspect operation of barometric dampers.
14. Lubricate bearings on fan.
15. Inspect fan-wheel rotation for movement in correct direction without vibration and binding.
16. Adjust fan belts to proper alignment and tension.

17. Start unit according to manufacturer's written instructions.

    a. Start refrigeration system in summer only.
    b. Complete startup sheets and attach copy with Contractor's startup report.

18. Inspect and record performance of interlocks and protective devices; verify sequences.
19. Operate unit for an initial period as recommended or required by manufacturer.
20. Perform the following operations for both minimum and maximum firing and adjust burner for peak efficiency. Adjust pilot to stable flame.

    a. Measure gas pressure on manifold.
    b. Measure combustion-air temperature at inlet to combustion chamber.
    c. Measure flue-gas temperature at furnace discharge.
    d. Perform flue-gas analysis. Measure and record flue-gas carbon dioxide and oxygen concentration.
    e. Measure supply-air temperature and volume when burner is at maximum firing rate and when burner is off. Calculate useful heat to supply air.

21. Calibrate thermostats.
22. Adjust and inspect high-temperature limits.
23. Inspect outside-air dampers for proper stroke and interlock with return-air dampers.
24. Start refrigeration system and measure and record the following:

    a. Coil leaving-air, dry- and wet-bulb temperatures.
    b. Coil entering-air, dry- and wet-bulb temperatures.
    c. Outside-air, dry-bulb temperature.
    d. Outside-air-coil, discharge-air, dry-bulb temperature.

25. Inspect controls for correct sequencing of heating, mixing dampers, refrigeration, and normal and emergency shutdown.
26. Measure and record the following minimum and maximum airflows. Plot fan volumes on fan curve.

    a. Supply-air volume.
    b. Return-air volume.
    c. Relief-air volume.
    d. Outside-air intake volume.

27. Simulate maximum cooling demand and inspect the following:

    a. Compressor refrigerant suction and hot-gas pressures.
    b. Short circuiting of air through outside coil or from outside coil to outside-air intake.

28. Verify operation of remote panel, including pilot-light operation and failure modes. Inspect the following:

    a. High-limit heat exchanger.
    b. Warm-up for morning cycle.
    c. Freezestat operation.
    d. Economizer to limited outside-air changeover.
    e. Alarms.

29. After startup and performance testing, change filters, vacuum heat exchanger and cooling and outside coils, lubricate bearings, adjust belt tension, and inspect operation of power vents.

3.05 ADJUSTING

A. Adjust initial temperature and humidity set points.

B. Set field-adjustable switches and circuit-breaker trip ranges as indicated.

C. Occupancy Adjustments: When requested within 12 months of date of Substantial Completion, provide on-site assistance in adjusting system to suit actual occupied conditions. Provide up to two visits to site outside normal occupancy hours for this purpose, without additional cost.

3.06 DEMONSTRATION

A. Engage a factory-authorized service representative to train Owner's maintenance personnel to adjust, operate, and maintain rooftop air conditioners. Refer to Division 1 Section "Closeout Procedures, Demonstration and Training."

END OF SECTION 237413

SECTION 237433 - DEDICATED OUTDOOR-AIR UNITS

PART 1 - GENERAL

1.1 RELATED DOCUMENTS

A. Drawings and general provisions of the Contract, including General and Supplementary Conditions and Division 01 Specification Sections, apply to this Section.

1.2 SUMMARY

A. Section includes factory-packaged units capable of supplying up to 100 percent outdoor air and providing cooling and heating.

1.3 ACTION SUBMITTALS

A. Product Data: For each type of product. Include rated capacities, operating characteristics, and furnished specialties and accessories.

B. Shop Drawings:

1. Include plans, elevations, sections, and attachment details.
2. Include details of equipment assemblies. Indicate dimensions, weights, loads, required clearances, method of field assembly, components, and location and size of each field connection.
3. Prepare the following by or under the supervision of a qualified professional engineer:

a. Mounting Details: For securing and flashing roof curb to roof structure. Indicate coordinating requirements with roof membrane system.
b. Include diagrams for power, signal, and control wiring.

1.4 INFORMATIONAL SUBMITTALS

A. Coordination Drawings: Roof-curb mounting details, drawn to scale, on which the following items are shown and coordinated with each other, using input from installers of the items involved:

1. Size and location of unit-mounted rails and anchor points and methods for anchoring units to roof curb.
2. Required roof penetrations for ducts, pipes, and electrical raceways, including size and location of each penetration.

B. Startup service reports.

C. Sample Warranty: For special warranty.

1.5 CLOSEOUT SUBMITTALS

A. Operation and Maintenance Data: For units to include in emergency, operation, and maintenance manuals.

1.6 MAINTENANCE MATERIAL SUBMITTALS

A. Furnish extra materials that match products installed and that are packaged with protective covering for storage and identified with labels describing contents.

1. Fan Belts: One set for each belt-driven fan.
2. Filters: One set for each unit.

1.7 WARRANTY

A. Special Warranty: Manufacturer agrees to replace components of units that fail in materials or workmanship within specified warranty period.

1. Warranty Period for Compressors: Five (5) years from date of Substantial Completion.
2. Warranty Period for Heat Exchangers: Ten (10) years from date of Substantial Completion.

PART 2 - PRODUCTS

2.1 MANUFACTURERS

1. Trane Company (The); North American Commercial Group.
2. Daikin Applied
3. AAON
4. Trane Company (The); North American Commercial Group.
5. Or approved equal.

2.2 PERFORMANCE REQUIREMENTS

A. General Fabrication Requirements: Comply with requirements in ASHRAE 62.1, Section 5 - "Systems and Equipment," and Section 7 - "Construction and System Start-up."

B. Cabinet Thermal Performance:

1. Maximum Overall U-Value: Comply with requirements in ASHRAE/IESNA 90.1.
2. Include effects of metal-to-metal contact and thermal bridges in the calculations.

C. Cabinet Surface Condensation:

1. Cabinet shall have additional insulation and vapor seals if required to prevent condensation on the interior and exterior of the cabinet.
2. Portions of cabinet located downstream from the cooling coil shall have a thermal break at each thermal bridge between the exterior and interior casing to prevent condensation from occurring on the interior and exterior surfaces. The thermal break shall not compromise the structural integrity of the cabinet.

D. Maximum Cabinet Leakage: 1 percent of the total supply-air flow at a pressure rating equal to the fan shut-off pressure.

E. Cabinet Deflection Performance:

1. Walls and roof deflection shall be within 1/200 of the span at the design working pressure equal to the fan shut-off pressure. Deflection limits shall be measured at any point on the surface.
2. Floor deflections shall be within 1/240 of the span considering the worst-case condition caused by the following:

a. Service personnel.
b. Internal components.
c. Design working pressure defined for the walls and roof.

F. Electrical components, devices, and accessories: Listed and labeled as defined in NFPA 70, by a qualified testing agency, and marked for intended location and application.

G. Capacities and Characteristics: Refer to drawings and schedule

2.3 CABINET

A. Construction: double wall.

B. Exterior Casing Material: Galvanized steel with paint finish.

C. Interior Casing Material: Galvanized steel.

D. Lifting and Handling Provisions: Factory-installed shipping skids and lifting lugs.

E. Base Rails: Galvanized-steel rails for mounting on roof curb or pad as indicated.

F. Access for Inspection, Cleaning, and Maintenance: Comply with requirements in ASHRAE 62.1.

1. Service Doors: Hinged access doors with gaskets. Material and construction of doors shall match material and construction of cabinet in which doors are installed.

G. Roof: Standing seam or membrane; sloped to drain water.

H. Floor: Reinforced, metal surface; reinforced to limit deflection when walked on by service personnel. Insulation shall be below metal walking surface.

I. Cabinet Insulation:

1. Type: Injected Foam
2. Thickness: 1 inch
3. Mechanical Fasteners: Suitable for adhesive, mechanical, or welding attachment to casing without damaging liner and without causing air leakage when applied as recommended by manufacturer.

J. Condensate Drain Pans:

1. Shape: Rectangular, with **1** percent slope in at least two planes to direct water toward drain connection.

2. Size: Large enough to collect condensate from cooling coils including coil piping connections, coil headers, and return bends.

   a. Length: Extend drain pan downstream from leaving face to comply with ASHRAE 62.1
   b. Depth: A minimum of 2 inches.

3. Configuration: Single wall.
4. Material: Stainless-steel sheet.
5. Drain Connection:

   a. Located on one end of pan, at lowest point of pan.
   b. Terminated with threaded nipple.
   c. Minimum Connection Size: NPS 1.

6. Units with stacked coils shall have an intermediate drain pan to collect condensate from top coil.

K. Surfaces in Contact with Airstream: Comply with requirements in ASHRAE 62.1 for resistance to mold and erosion.

L. Roof Curb: Full-perimeter vibration isolation roof curb of sheet metal, minimum 18” tall high, with wood nailer, neoprene sealing strip, and welded Z-bar flashing.

1. Comply with requirements in "The NRCA Roofing Manual."

2.4 SUPPLY FAN

A. Forward-Curved Fan Type: Centrifugal; statically and dynamically balanced.

1. Fan Wheel Material: Galvanized, Coated steel, mounted on solid-steel shaft.
2. Bearings: Pillow-block bearings rated L_{50} for 200,000 hours and having external grease fittings.

B. Service Factor for Belt Drive Applications: V-belt drive with matching fan pulley and adjustable motor sheaves and belt assembly with minimum 1.5 service factor.

C. Motors:

1. Comply with NEMA designation, temperature rating, service factor, and efficiency requirements for motors specified in Section 230513 "Common Motor Requirements for HVAC Equipment."
2. Enclosure: Open dripproof.
3. Enclosure Materials: Cast iron.
4. Motor Bearings:

5. Efficiency: Premium efficient.

D. Mounting: Fan wheel, motor, and drives shall be mounted to fan casing with spring isolators.

2.5 COOLING COILS

A. The indoor coil section shall be installed in a draw through configuration, upstream of the supply air fan. The coil section shall be complete with a factory piped cooling coil and an ASHRAE 62.1 compliant double sloped drain pan.

B. The direct expansion (DX) cooling coils shall be fabricated of seamless high efficiency copper tubing that is mechanically expanded into high efficiency aluminum plate fins. Coils shall be a multi-row, staggered tube design with a minimum of 3 rows. All cooling coils shall have an interlaced coil circuiting that keeps the full coil face active at all load conditions. All coils shall be factory leak tested with high pressure air under water.

C. The cooling coil shall have an electronic controlled expansion valve. The unit controller shall control the expansion valve to maintain liquid subcooling and the superheat of the refrigerant system.

D. The refrigerant suction lines shall be fully insulated from the expansion valve to the compressors.

E. The drain pan shall be stainless steel and positively sloped. The slope of the drain pan shall be in two directions and comply with ASHRAE Standard 62.1. The drain pan shall have a minimum slope of 1/8" per foot to provide positive draining. The drain pan shall extend beyond the leaving side of the coil. The drain pan shall have a threaded drain connection extending through the unit base.

F. A drain pan over flow safety shall shut off the unit and issue a warning before over flow occurs.

2.6 INDIRECT-FIRED GAS FURNACE HEATING

A. The rooftop unit shall include a natural gas heating section. The gas furnace design shall be one natural gas fired heating module factory installed downstream of the supply air fan in the heat section. The heating module shall be a tubular design with in-shot gas burners.

B. Each module shall have two stages of heating control.

C. The heat exchanger tubes shall be constructed of stainless steel.

D. The module shall have an induced draft fan that will maintain a negative pressure in the heat exchanger tubes for the removal of the flue gases.

E. Each burner module shall have two flame roll-out safety protection switches and a high temperature limit switch that will shut the gas valve off upon detection of improper burner manifold operation. The induced draft fan shall have an airflow safety switch that will prevent the heating module from turning on in the event of no airflow in the flue chamber.

F. The factory-installed DDC unit control system shall control the gas heat module. Field installed heating modules shall require a field ETL certification. The manufacturer’s rooftop unit ETL certification shall cover the complete unit including the gas heating modules.

2.7 OUTDOOR-AIR INTAKE HOOD

A. Type: Manufacturer's standard hood or louver.

B. Materials: Match cabinet.

C. Bird Screen: Comply with requirements in ASHRAE 62.1.

D. Configuration: Designed to inhibit wind-driven rain and snow from entering unit.

2.8 FILTERS

A. Disposable Panel Filters:

1. Comply with NFPA 90A.
2. Factory-fabricated, viscous-coated, flat-panel type.
3. Thickness: 2 inches
4. Minimum Merv: 8 , according to ASHRAE 52.2.
5. Media: Interlaced glass fibers sprayed with nonflammable adhesive

B. Mounting Frames:

1. Panel filters arranged for flat or angular orientation, with access doors on both sides of unit. Filters shall be removable from one side or from access plenum.
2. Extended surface filters arranged for flat orientation, removable from access plenum.
3. Galvanized or stainless steel with gaskets and fasteners, suitable for bolting together into built-up filter banks.

2.9 ELECTRICAL POWER CONNECTIONS

A. General Electrical Power Connection Requirements: Factory-installed and -wired switches, motor controllers, transformers, and other necessary electrical devices shall provide a [**single-point**]field power connection to unit.

B. Enclosure: NEMA 250, Type 3R, mounted in unit with hinged access door in unit cabinet having a lock and key or padlock and key,

C. Wiring: Numbered and color-coded to match wiring diagram.

D. Wiring Location: Install factory wiring outside an enclosure in a raceway.

E. Factory-Mounted, Overcurrent-Protection Service: For each motor.

F. Transformer: Factory mounted with primary and secondary fuses and sized with enough capacity to operate electrical load plus spare capacity.

G. Controls: Factory wire unit-mounted controls where indicated.

H. Lights: Factory wire unit-mounted lights.

I. Receptacle: Factory wire unit-mounted, ground fault interrupt (GFI) duplex receptacle.

J. Control Relays: Auxiliary and adjustable time-delay relays.

2.10 CONTROLS

A. Control equipment and sequence of operation are specified in Section 230923 "Direct Digital Control (DDC) System for HVAC" and Section 230993.11 "Sequence of Operations for HVAC DDC."

B. Control Wiring: Factory wire connection for controls' power supply.

C. Control Devices: Sensors, transmitters, relays, switches, detectors, operators, actuators, and valves shall be manufacturer's standard items to accomplish indicated control functions.

2.11 ACCESSORIES

A. Service Lights and Switch: Factory installed in each accessible section and on exterior of unit with weatherproof cover. Factory wire lights to a single-point field connection.

B. Duplex Receptacle: Factory mounted on the exterior of the unit, with 20 amp 120 V GFI duplex receptacle and weatherproof cover.

PART 3 - EXECUTION

3.1 EXAMINATION

A. Examine substrates, areas, and conditions, with Installer present, for compliance with requirements for installation tolerances and other conditions affecting performance of the Work.

B. Examine roughing-in for piping, ducts, and electrical systems to verify actual locations of connections before equipment installation.

C. Examine roof curbs and equipment supports for suitable conditions where units will be installed.

D. Proceed with installation only after unsatisfactory conditions have been corrected.

3.2 INSTALLATION

A. Comply with manufacturer's rigging and installation instructions for unloading units and moving to final locations.

B. Curb Support: Install roof curb on roof structure according to "The NRCA Roofing Manual."

1. Install and secure units on curbs and coordinate roof penetrations and flashing with roof construction.
2. Coordinate size, installation, and structural capacity of roof curbs, equipment supports, and roof penetrations. These items are specified in Section 077200 "Roof Accessories."
3. Coordinate size, location, and installation of unit manufacturer's roof curbs and equipment supports with roof Installer.

C. Restrained Curb Support: Install restrained vibration isolation roof-curb rails on roof structure according to "The NRCA Roofing Manual."

D. Equipment Mounting:

1. Comply with requirements for vibration isolation and seismic control devices specified in Section 230548 "Vibration and Seismic Controls for HVAC."
2. Comply with requirements for vibration isolation devices specified in Section 230548.13 "Vibration Controls for HVAC."

E. Install wall- and duct-mounted sensors furnished by manufacturer for field installation. Install control wiring and make final connections to control devices and unit control panel.

F. Comply with requirements for gas-fired furnace installation in NFPA 54, "National Fuel Gas Code."

G. Install separate devices furnished by manufacturer and not factory installed.

H. Install new filters at completion of equipment installation and before testing, adjusting, and balancing.

3.3 CONNECTIONS

A. Where installing piping adjacent to units, allow space for service and maintenance.

B. Gas Piping Connections:

1. Comply with requirements in Section 231123 "Facility Natural-Gas Piping."
2. Connect gas piping to furnace, full size of gas train inlet, and connect with union, pressure regulator, and shutoff valve with sufficient clearance for burner removal and service.
3. Install AGA-approved flexible connectors.

C. Duct Connections:

1. Comply with requirements in Section 233113 "Metal Ducts."
2. Drawings indicate the general arrangement of ducts.
3. Connect ducts to units with flexible duct connectors. Comply with requirements for flexible duct connectors in Section 233300 "Air Duct Accessories."

D. Electrical Connections: Comply with requirements for power wiring, switches, and motor controls in electrical Sections.

1. Install electrical devices furnished by unit manufacturer but not factory mounted.

3.4 STARTUP SERVICE

A. Engage a factory-authorized service representative to perform startup service.

1. Complete installation and startup checks according to manufacturer's written instructions.
2. Inspect units for visible damage to furnace combustion chamber.
3. Perform the following operations for both minimum and maximum firing and adjust burner for peak efficiency:

a. Measure gas pressure at manifold.
b. Measure combustion-air temperature at inlet to combustion chamber.
c. Measure flue-gas temperature at furnace discharge.

d. Perform flue-gas analysis. Measure and record flue-gas carbon dioxide and oxygen concentration.
e. Measure supply-air temperature and volume when burner is at maximum firing rate and when burner is off. Calculate useful heat to supply air.

4. Verify operation of remote panel including pilot-light operation and failure modes. Inspect the following:

   a. High-limit heat exchanger.
   b. Alarms.

5. Inspect units for visible damage to refrigerant compressor, condenser and evaporator coils, and fans.
6. Start refrigeration system when outdoor-air temperature is within normal operating limits and measure and record the following:

   a. Cooling coil leaving-air, dry- and wet-bulb temperatures.
   b. Cooling coil entering-air, dry- and wet-bulb temperatures.
   c. Condenser coil entering-air dry-bulb temperature.
   d. Condenser coil leaving-air dry-bulb temperature.

7. Simulate maximum cooling demand and inspect the following:

   a. Compressor refrigerant suction and hot-gas pressures.
   b. Short-circuiting of air through outside coil or from outside coil to outdoor-air intake.

8. Inspect casing insulation for integrity, moisture content, and adhesion.
9. Verify that clearances have been provided for servicing.
10. Verify that controls are connected and operable.
11. Verify that filters are installed.
12. Clean coils and inspect for construction debris.
13. Clean furnace flue and inspect for construction debris.
14. Inspect operation of power vents.
15. Purge gas line.
16. Inspect and adjust vibration isolators and seismic restraints.
17. Verify bearing lubrication.
18. Clean fans and inspect fan-wheel rotation for movement in correct direction without vibration and binding.
19. Adjust fan belts to proper alignment and tension.
20. Start unit.
21. Inspect and record performance of interlocks and protective devices including response to smoke detectors by fan controls and fire alarm.
22. Operate unit for run-in period.
23. Calibrate controls.
24. Adjust and inspect high-temperature limits.
25. Inspect outdoor-air dampers for proper stroke.
26. Verify operational sequence of controls.
27. Measure and record the following airflows. Plot fan volumes on fan curve.

    a. Supply-air volume.
    b. Return-air flow.
    c. Outdoor-air flow.

B. After startup, change filters, verify bearing lubrication, and adjust belt tension.

C. Remove and replace components that do not properly operate and repeat startup procedures as specified above.

D. Prepare written report of the results of startup services.

3.5 ADJUSTING

A. Adjust initial temperature and humidity set points.

B. Set field-adjustable switches and circuit-breaker trip ranges as indicated.

C. Occupancy Adjustments: When requested within 12 months from date of Substantial Completion, provide on-site assistance in adjusting system to suit actual occupied conditions. Provide up to two visits to Project during other-than-normal occupancy hours for this purpose.

3.6 DEMONSTRATION

A. Engage a factory-authorized service representative to train Owner's maintenance personnel to adjust, operate, and maintain units.

END OF SECTION 237433

SECTION 238126 - SPLIT-SYSTEM AIR-CONDITIONERS

PART 1 - GENERAL

1.1 RELATED DOCUMENTS

A. Drawings and general provisions of the Contract, including General and Supplementary Conditions and Division 1 Specification Sections, apply to this Section.

1.2 SUMMARY

A. This Section includes split-DX heat pump and air conditioning units.

1.3 SUBMITTALS

A. Product Data: Include rated capacities, furnished specialties, and accessories for each type of product indicated. Include performance data in terms of capacities, outlet velocities, static pressures, sound power characteristics, motor requirements, and electrical characteristics.

B. Shop Drawings: Diagram power, signal, and control wiring.

C. Samples for Initial Selection: For units with factory-applied color finishes.

D. Field quality-control test reports.

E. Operation and Maintenance Data: For split-system air-conditioning units to include in emergency, operation, and maintenance manuals.

F. Warranty: Special warranty specified in this Section.

1.4 QUALITY ASSURANCE

A. Electrical Components, Devices, and Accessories: Listed and labeled as defined in NFPA 70, Article 100, by a testing agency acceptable to authorities having jurisdiction, and marked for intended use.

B. Energy-Efficiency Ratio: Equal to or greater than prescribed by ASHRAE 90.1, "Energy Efficient Design of New Buildings except Low-Rise Residential Buildings."

C. Coefficient of Performance: Equal to or greater than prescribed by ASHRAE 90.1, "Energy Efficient Design of New Buildings except Low-Rise Residential Buildings."

1.5 COORDINATION

A. Coordinate size and location of concrete bases for units. Cast anchor-bolt inserts into bases. Concrete, reinforcement, and formwork are specified in Division 3 Section "Cast-in-Place Concrete."

B. Coordinate size, location, and connection details with roof curbs, equipment supports, and roof penetrations specified in Division 7 Section "Roof Accessories."

1.6 EXTRA MATERIALS

A. Furnish extra materials described below that match products installed and that are packaged with protective covering for storage and identified with labels describing contents.

1. Filters: One set of filters for each unit.

PART 2 - PRODUCTS

2.1 MANUFACTURERS

A. Available Manufacturers: Subject to compliance with requirements, manufacturers offering products that may be incorporated into the Work include, but are not limited to, the following:

B. Manufacturers: Subject to compliance with requirements, provide products by one of the following:

1. Mitsubishi (Basis of Design)
2. Daikin Applied
3. Or Approved Equal.

2.2 DUCTLESS CEILING CASSETTE INDOOR AND OUTDOOR UNITS

A. System Description: The heat pump and air conditioning system shall be split-DX system with Variable Speed Inverter Compressor technology. The system shall consist of a horizontal discharge, single phase outdoor unit, matched capacity indoor cassette units that shall be equipped with a wired wall mounted, wireless wall mounted remote controller. **Refer the drawings and mechanical schedules for types of models of units.**

B. Quality Assurance:

1. The units shall be tested by a Nationally Recognized Testing Laboratory (NRTL) and shall bear the ETL label.

2. All wiring shall be in accordance with the National Electrical Code (N.E.C.) and local codes as required.

3. The units shall be rated in accordance with Air-conditioning, Heating, and Refrigeration Institute's (AHRI) Standard 210 and bear the ARI Certification label.

4. The units shall be manufactured in a facility registered to ISO 9001 and ISO 14001, which is a set of standards applying to environmental protection set by the International Standard Organization (ISO).

5. A dry air holding charge shall be provided in the indoor section.

6. The outdoor unit shall be pre-charged with R-454b refrigerant for 70 feet (20 meters) of refrigerant tubing.

7. System efficiency shall meet or exceed SEER values as scheduled on the plans.

C. Delivery, Storage and Handling:

1. Unit shall be stored and handled according to the manufacturer's recommendations.

2. The controller shall be shipped separately and shall be able to withstand 105°F storage temperatures and 95% relative humidity without adverse effect.

D. Warranty:

1. The units shall have a manufacturer's parts and defects warranty for a period five (5) year from date of installation. The compressor shall have a warranty of seven (7) years from date of installation. If, during this period, any part should fail to function properly due to defects in workmanship or material, it shall be replaced or repaired at the discretion of the manufacturer. This warranty does not include labor.

2. Manufacturer shall have over thirty (30) years of continuous experience in the U.S. market.

E. Outdoor Unit Design:

1. The outdoor unit shall be equipped with an electronic control board that interfaces with the indoor unit to perform all necessary operation functions.

2. The outdoor unit shall be capable of cooling operation down to 0°F (-18°C) ambient temperature without additional low ambient controls (optional wind baffle shall be required).

3. The outdoor unit shall be able to operate with a maximum height difference of 100 feet between indoor and outdoor units.

4. System shall operate at up to a maximum refrigerant tubing length of 165 feet (50 meters) for the 36,000 units between indoor and outdoor units without the need for line size changes, traps or additional oil.

5. The outdoor unit shall be completely factory assembled, piped, and wired. Each unit must be test run at the factory.

6. Outdoor unit sound level shall not exceed 48dB (A).

F. Cabinet:

1. The casing shall be constructed from galvanized steel plate, finished with an electrostatically applied, thermally fused acrylic or polyester powder coating for corrosion protection.

2. Mounting feet shall be provided and shall be welded to the base of the cabinet and be of sufficient size to afford reliable equipment mount and stability.

3. Easy access shall be afforded to all serviceable parts by means of removable panel sections.

4. The fan grill shall be of ABS plastic.

5. Cabinet mounting and construction shall be sufficient to withstand 155 MPH wind speed conditions for use in Hurricane condition areas. Mounting, base support, and other installation to meet Hurricane Code Conditions shall be by others.

G. Fan:

1. Each unit shall be furnished with a single DC fan motor.

2. The fan blade(s) shall be of aerodynamic design for quiet operation, and the fan motor bearings shall be permanently lubricated.

3. The outdoor unit shall have horizontal discharge airflow. The fan shall be mounted in front of the coil, pulling air across it from the rear and dispelling it through the front. The fan shall be provided with a raised guard to prevent external contact with moving parts.

H. Coil:

1. The L shaped condenser coil shall be of copper tubing with flat aluminum fins to reduce debris build up and allow maximum airflow. The coil shall be protected with an integral metal guard.

2. Refrigerant flow from the condenser shall be controlled by means of an electronic linear expansion valve (LEV) metering device. The LEV shall be controlled by a microprocessor controlled step motor.

3. All refrigerant lines between outdoor and indoor units shall be of annealed, refrigeration grade copper tubing, ARC Type, meeting ASTM B280 requirements, individually insulated in twin-tube, flexible, closed-cell, CFC-free (ozone depletion potential of zero), elastomeric material for the insulation of refrigerant pipes and tubes with thermal conductivity equal to or better than 0.27 BTU-inch/hour per Sq Ft / °F, a water vapor transmission equal to or better than 0.08 Perm-inch and superior fire ratings such that insulation will not contribute significantly to fire and up to 1” thick insulation shall have a - Flame-Spread Index of less than 25 and a Smoke-development Index of less than 50 as tested by ASTM E 84 and CAN / ULC S-102.

I. Compressor:

1. The compressor shall be a DC twin-rotor rotary compressor with Variable Speed Inverter Drive Technology.

2. The compressor shall be driven by inverter circuit to control compressor speed. The compressor speed shall dynamically vary to match the room load for significantly increasing the efficiency of the system which shall result in significant energy savings.

3. To prevent liquid from accumulating in the compressor during the off cycle, a minimal amount of current shall be automatically, intermittently applied to the compressor motor windings to maintain sufficient heat to vaporize any refrigerant. No crankcase heater is to be used.

4. The outdoor unit shall have an accumulator and high pressure safety switch. The compressor shall be mounted to avoid the transmission of vibration.

J. Electrical:

1. The electrical power of the unit shall be 208volts, single phase, 60 hertz. The unit shall be capable of satisfactory operation within voltage limits of 187 volts to 253 volts.

2. Power for the indoor unit shall be supplied from the outdoor unit via Mitsubishi Electric A-Control using three (3) fourteen (14) gauge AWG conductors plus ground wire connecting the units.

3. The outdoor unit shall be controlled by the microprocessor located in the indoor unit. The control signal between the indoor unit and the outdoor unit shall be pulse signal 24 volts DC.

4. The unit shall have Pulse Amplitude Modulation circuit to utilize 98% of input power supply.

K. Operating Range: Refer to mechanical schedule

L. Unit Cabinet:

1. The cabinet shall be formed from high strength molded plastic with smooth finish, flat front panel design with access for filter. Cabinet color shall be white.

M. Fan:

1. The indoor unit fan shall be high performance, double inlet, forward curve, direct drive sirocco fan with a single motor. The fans shall be statically and dynamically balanced and run on a motor with permanently lubricated bearings. The indoor fan shall consist of three (3) speeds: Low, Mid, and Hi and Auto. The fan shall have a selectable Auto fan setting that will adjust the fan speed based on the difference between controller set-point and space temperature.

O. Vane:

1. There shall be a motorized horizontal vane to automatically direct air flow in a horizontal and downward direction for uniform air distribution. The horizontal vane shall significantly decrease downward air resistance for lower sound levels, and shall close the outlet port when operation is stopped. There shall also be a set of vertical vanes to provide horizontal swing airflow movement.

P. Filter:

1. Return air shall be filtered by means of an easily removable washable filter.

Q. Coil:

1. The evaporator coil shall be of nonferrous construction with pre-coated aluminum strake fins on copper tubing. The multi-angled heat exchanger shall have a modified fin shape

that reduces air resistance for a smoother, quieter airflow. All tube joints shall be brazed with PhosCopper or silver alloy. The coils shall be pressure tested at the factory. A condensate pan and drain shall be provided under the coil. An optional drain pan level switch (DPLS1), designed to connect to the control board, shall be provided if required, and installed on the condensate pan to prevent condensate from overflowing.

R. Electrical:

1. The electrical power of the unit shall be 208 volts, 1 phase, 60 hertz. The system shall be capable of satisfactory operation within voltage limits of 187 volts to 253 volts. The power to the indoor unit shall be supplied from the outdoor unit, using the Mitsubishi Electric A-Control system. For A-Control, a three (3) conductor AWG-14 wire with ground shall provide power feed and bi-directional control transmission between the outdoor and indoor units.

S. Performance:

1. Each system shall perform in accordance to the ratings shown in the manufacturer catalog. Cooling performance shall be based on 80°F DB, 67°F WB (26.7°C DB, 19.4°C WB) for the indoor unit and 95°F DB, 75°F WB (35°C DB, 29.3°C WB) for the outdoor unit.

T. System Control:

1. The control system shall consist of a minimum of two (2) microprocessors, one on each indoor and outdoor unit, interconnected by a single non-polar two-wire cable. The microprocessor located in the indoor unit shall have the capability of monitoring return air temperature and indoor coil temperature, receiving and processing commands from a wireless or wired controller, providing emergency operation and controlling the outdoor unit. The control signal between the indoor and outdoor unit shall be pulse signal 24 volts DC. Indoor units shall have the ability to control supplemental heat via connector CN152 and a 12 VDC output.

U. System Control: The indoor unit control board shall have auxiliary control contact connectors.

V. Remote Controllers: Provide remote controller and BACnet interface for each unit as called out on the drawings and mechanical schedules.

W. **DDC Controls: New DDC controls shall be furnished and installed by DDC subcontractor and connected to building management system. Refer to Spec. Section 230900 "HVAC Instrumentation and Controls" for requirements**.

2.3 CEILING CONCEALED DUCTED INDOOR AND OUTDOOR UNITS

A. General: The ceiling-concealed ducted indoor units shall be factory assembled, wired and run tested. Contained within the unit shall be all factory wiring, piping, electronic modulating linear expansion device, control circuit board and fan motor. The units shall have a self-diagnostic function, 3-minute time delay mechanism, and an auto restart function. Indoor units and refrigerant pipes shall be charged with dehydrated air before shipment from the factory. The units shall be suitable for use in plenums in accordance with UL1995 ed 4. **Refer the drawings and mechanical schedules for types of models of units.**

B. Quality Assurance:

1. The units shall be tested by a Nationally Recognized Testing Laboratory (NRTL) and shall bear the ETL label.

2. All wiring shall be in accordance with the National Electrical Code (N.E.C.) and local codes as required.

3. The units shall be rated in accordance with Air-conditioning, Heating, and Refrigeration Institute's (AHRI) Standard 210 and bear the ARI Certification label.

4. The units shall be manufactured in a facility registered to ISO 9001 and ISO 14001, which is a set of standards applying to environmental protection set by the International Standard Organization (ISO).

5. A dry air holding charge shall be provided in the indoor section.

6. The outdoor unit shall be pre-charged with R-454b refrigerant for 70 feet (20 meters) of refrigerant tubing.

7. System efficiency shall meet or exceed SEER values as scheduled on the plans.

C. Delivery, Storage and Handling:

1. Unit shall be stored and handled according to the manufacturer's recommendations.

2. The controller shall be shipped separately and shall be able to withstand 105°F storage temperatures and 95% relative humidity without adverse effect.

D. Warranty:

1. The units shall have a manufacturer's parts and defects warranty for a period five (5) year from date of installation. The compressor shall have a warranty of seven (7) years from date of installation. If, during this period, any part should fail to function properly due to defects in workmanship or material, it shall be replaced or repaired at the discretion of the manufacturer. This warranty does not include labor.

2. Manufacturer shall have over thirty (30) years of continuous experience in the U.S. market.

E. Outdoor Unit Design:

1. The outdoor unit shall be equipped with an electronic control board that interfaces with the indoor unit to perform all necessary operation functions.

2. The outdoor unit shall be capable of cooling operation down to 0°F (-18°C) ambient temperature without additional low ambient controls (optional wind baffle shall be required).

3. The outdoor unit shall be able to operate with a maximum height difference of 100 feet between indoor and outdoor units.

4. System shall operate at up to a maximum refrigerant tubing length of 165 feet (50 meters) for the 36,000 units between indoor and outdoor units without the need for line size changes, traps or additional oil.

5. The outdoor unit shall be completely factory assembled, piped, and wired. Each unit must be test run at the factory.

6. Outdoor unit sound level shall not exceed 48dB (A).

F. Cabinet:

1. The unit shall be ceiling-concealed, ducted—with a fixed rear return and a horizontal discharge supply.

2. The cabinet panel shall have provisions for a field installed filtered outside air intake.

G. Fan:

1. Indoor unit shall feature multiple external static pressure settings ranging up to 1.0 in. WG.

2. The indoor unit fan shall be an assembly with statically and dynamically balanced Sirocco fan(s) direct driven by a single motor with permanently lubricated bearings.

H. Filter:

1. Return filter box (rear placement) with high-efficiency filter as noted on equipment schedule.

I. Coil:

1. The indoor coil shall be of nonferrous construction with smooth plate fins on copper tubing. The tubing shall have inner grooves for high efficiency heat exchange. All tube joints shall be brazed with phos-copper or silver alloy.

2. The coils shall be pressure tested at the factory.

3. Coil shall be provided with a sloped drain pan. Units without sloped drain pans which must be installed cockeyed to ensure proper drainage are not allowed.

4. The unit shall be provided with an integral condensate lift mechanism able to raise drain water 27 inches above the condensate pan.

J. Electrical:

1. The unit electrical power shall be 208/230 volts, 1-phase, 60 hertz.

2. The system shall be capable of satisfactory operation within voltage limits of 187-228 volts (208V/60Hz) or 207-253 volts (230V/60Hz.

K. Control:

1. Indoor unit shall compensate for the higher temperature sensed by the return air sensor compared to the temperature at level of the occupant when in HEAT mode. Disabling of compensation shall be possible for individual units to accommodate instances when compensation is not required.

2. Control board shall include contacts for control of external heat source. External heat may be energized as second stage with 1.8°F – 9.0°F adjustable deadband from set point.

3. Indoor unit shall include no less than four (4) digital inputs capable of being used for customizable control strategies.

4. Indoor unit shall include no less than three (3) digital outputs capable of being used for customizable control strategies

U. System Control: The indoor unit control board shall have auxiliary control contact connectors.

V. Remote Controllers: Provide remote controller and BACnet interface for each unit as called out on the drawings and mechanical schedules.

W. **DDC Controls: New DDC controls shall be furnished and installed by DDC subcontractor and connected to building management system. Refer to Spec. Section 230900 "HVAC Instrumentation and Controls" for requirements**.

PART 3 - EXECUTION

3.1 INSTALLATION

A. Install units level and plumb.

B. Install in-door units using manufacturer's standard mounting devices securely fastened to building structure.

C. Install roof-mounting outdoor units on equipment supports. Anchor units to supports with removable, cadmium-plated fasteners.

D. Install seismic restraints.

E. Install outdoor units on restrained, spring isolators with a minimum static deflection of 1 inch. Refer to Division 23 Section "Mechanical Vibration and Seismic Controls."

F. Install and connect precharged refrigerant tubing to component's quick-connect fittings. Install tubing to allow access to unit.

3.2 CONNECTIONS

A. Piping installation requirements are specified in other Division 23 Sections. Drawings indicate general arrangement of piping, fittings, and specialties.

B. Install piping adjacent to unit to allow service and maintenance.

C. Ground equipment according to Division 26 Section "Grounding and Bonding for Electrical Systems."

D. Electrical Connections: Comply with requirements in Division 26 Sections for power wiring, switches, and motor controls.

3.3 FIELD QUALITY CONTROL

A. Manufacturer's Field Service: Engage a factory-authorized service representative to inspect, test, and adjust field-assembled components and equipment installation, including connections, and to assist in field testing. Report results in writing.

B. Perform the following field tests and inspections and prepare test reports:

1. Leak Test: After installation, charge system and test for leaks. Repair leaks and retest until no leaks exist.
2. Operational Test: After electrical circuitry has been energized, start units to confirm proper motor rotation and unit operation.
3. Test and adjust controls and safeties. Replace damaged and malfunctioning controls and equipment.

C. Remove and replace malfunctioning units and retest as specified above.

3.4 STARTUP SERVICE

A. Engage a factory-authorized service representative to perform startup service.

1. Complete installation and startup checks according to manufacturer's written instructions.

3.5 DEMONSTRATION

A. Engage a factory-authorized service representative to train Owner's maintenance personnel to adjust, operate, and maintain units. Refer to Division 1 Section "Closeout Procedures / Demonstration and Training."

END OF SECTION 238126

SECTION 238126.1 - SPLIT-SYSTEM VRF SYSTEM

PART 1 - GENERAL

1.1 RELATED DOCUMENTS

A. Drawings and general provisions of the Contract, including General and Supplementary Conditions and Division 1 Specification Sections, apply to this Section.

1.2 SUMMARY

A. This Section includes variable capacity, air-conditioning heat pump system.

1.3 SUBMITTALS

A. Product Data: Include rated capacities, furnished specialties, and accessories for each type of product indicated. Include performance data in terms of capacities, outlet velocities, static pressures, sound power characteristics, motor requirements, and electrical characteristics.

B. Shop Drawings: Diagram power, signal, and control wiring.

C. Samples for Initial Selection: For units with factory-applied color finishes.

D. Field quality-control test reports.

E. Operation and Maintenance Data: For split-system air-conditioning units to include in emergency, operation, and maintenance manuals.

F. Warranty: Special warranty specified in this Section.

1.4 QUALITY ASSURANCE

A. The units shall be listed by Electrical Testing Laboratories (ETL) and bear the ETL label.

B. All wiring shall be in accordance with the National Electrical Code (N.E.C.).

C. The units shall be manufactured in a facility registered to ISO 9001 and ISO14001 which is a set of standards applying to environmental protection set by the International Standard Organization (ISO).

D. The units shall be rated in accordance with Air-conditioning, Heating, and Refrigeration Institute's (AHRI) Standard 210 and bear the ARI Certification label.

E. A dry air holding charge shall be provided in the indoor section.

F. The outdoor unit shall be pre-charged with R-32 refrigerant for 70 feet (20 meters) of refrigerant tubing. Contractor to provide proper refrigerant charge for all units/system based on system installation layout.

G. System efficiency shall meet or exceed SEER values as scheduled on the plans.

H. System start-up supervision shall be a required service to be completed by the manufacturer or a duly authorized, competent representative that has been factory trained in system configuration and operation. The representative shall provide proof of manufacturer certification indicating successful completion within no more than two (2) years prior to system installation. This certification shall be included as part of the equipment and/or controls submittals.

1.5 DELIVERY, STORAGE AND HANDLING

A. Unit shall be stored and handled according to the manufacturer's recommendation.

1.6 COORDINATION

A. Coordinate size and location of concrete bases for units. Cast anchor-bolt inserts into bases. Concrete, reinforcement, and formwork are specified in Division 3 Section "Cast-in-Place Concrete."

B. Coordinate size, location, and connection details with roof curbs, equipment supports, and roof penetrations specified in Division 7 Section "Roof Accessories."

1.7 WARRANTY

A. The entire system shall be provided with two (2) years complete material and labor warranty. In addition, the units shall have a manufacturer's parts and defects warranty for a period of five (5) years from date of installation. The compressor shall have a warranty of seven (7) years from date of installation. If, during this period, any part should fail to function properly due to defects in workmanship or material, it shall be replaced or repaired at the discretion of the manufacturer. This warranty does not include labor beyond the initial first two years from substantial completion.

B. Manufacturer shall have over fifteen (15) years of continuous experience in the U.S. market.

1.8 EXTRA MATERIALS

A. Furnish extra materials described below that match products installed and that are packaged with protective covering for storage and identified with labels describing contents.

1. Filters: One set of spare washable filters for each unit.

PART 2 - PRODUCTS

2.1 MANUFACTURERS

A. Available Manufacturers: Subject to compliance with requirements, manufacturers offering products that may be incorporated into the Work include, but are not limited to, the following:

B. Manufacturers: Subject to compliance with requirements, provide products by one of the following:

1. Mitsubishi
2. Trane
3. Daikin
4. Or Approved Equal.

C. Unit shall be stored and handled according to the manufacturer's recommendation.

2.2 OUTDOOR UNITS

2.2.1 Y-SERIES HIGH EFFICIENCY (HEAT PUMP), AIR-COOLED OUTDOOR UNITS

A. General:

1. The outdoor unit modules shall be air-cooled, direct expansion (DX), multi-zone units used specifically with VRF components described in this section. The outdoor unit modules shall be equipped with a single compressor which is inverter-driven and multiple circuit boards—all of which must be manufactured by the branded VRF manufacturer. Each outdoor unit module shall be completely factory assembled, piped, and wired and run tested at the factory.

2. Outdoor unit systems may be comprised of multiple modules with differing capacity if a brand other than basis of design is proposed. All units requiring a factory supplied twinning kits shall be piped together in the field, without the need for equalizing line(s). If an alternate manufacturer is selected, any additional material, cost, and labor to install additional lines shall be incurred by the contractor. Contractor responsible for ensuring alternative brand compatibility in terms of availability, physical dimensions, weight, electrical requirements, etc.

3. Outdoor unit shall have a sound rating no higher than 64.5 dB(A) individually or 69.5 dB(A) twinned. Units shall have a sound rating no higher than 52 dB(A) individually or 54.5 dB(A) twinned while in night mode operation. Units shall have 5 levels sound adjustment via dip switch selectable fan speed settings. If an alternate manufacturer is selected, any additional material, cost, and labor to meet published sound levels shall be incurred by the contractor.

4. Refrigerant lines from the outdoor unit to the indoor units shall be insulated in accordance with the installation manual.

5. The outdoor unit shall have the capability of installing the main refrigerant piping through the bottom of the unit.

6. The outdoor unit shall have an accumulator with refrigerant level sensors and controls. Units shall actively control liquid level in the accumulator via Linear Expansion Valves (LEV) from the heat exchanger.

7. The outdoor unit shall have a high-pressure safety switch, over-current protection, crankcase heater and DC bus protection.

8. VRF system shall meet performance requirements per schedule and be within piping limitations & acceptable ambient temperature ranges as described in respective manufacturers' published product catalogs. Non-published product capabilities or performance data shall not be acceptable.

9. The outdoor unit shall be capable of guaranteed operation in heating mode down to -25F ambient temperatures and cooling mode up to 126□F without additional restrictions on line length & vertical separation beyond those published in respective product catalogs. Models with capacity data for required temperature range published as "for reference only" are not considered capable of guaranteed operation and are not acceptable. If an alternate manufacturer is selected, any additional material, cost, and labor to meet ambient operating range and performance shall be incurred by the contractor.

10. The outdoor unit shall have a high efficiency oil separator plus additional logic controls to ensure adequate oil volume in the compressor is maintained. Oil return sequences must be enabled only during extended periods of reduced refrigerant flow to ensure no disruption to correct refrigerant flow to individual zones during peak loads.

11. Unit shall defrost all circuits simultaneously in order to resume full heating more quickly during extreme low ambient temperatures (below 23F).

12. While in hot gas defrost the system shall slow the indoor unit fan speed down to maintain a high discharge air temperature.

13. VRF four-legged outdoor unit mounting systems shall be provided by manufacturer. Stand shall be made from 7-gauge plate steel with thermally fused polyester powder coat finish that meets ASTM D3451-06 standards. Stands shall be provided with galvanized mounting hardware and meets all ASCE 7 overturning safety requirement.

B. Unit Cabinet:

1. The casing(s) shall be fabricated of galvanized steel, bonderized and finished.

2. The outdoor unit shall be tested in compliance with ISO9277 such that no unusual rust shall develop after 960 hours of salt spray testing.

3. Panels on the outdoor unit shall be scratch free at system startup.

C. Fan:

1. Each outdoor unit module shall be furnished with direct drive, variable speed propeller type fan(s) only. Fans shall be factory set for operation at 0 in. WG external static pressure, but capable of normal operation with a maximum of 0.32 in. WG external static pressure via dipswitch.

2. All fan motors shall have inherent protection, have permanently lubricated bearings, and be completely variable speed.

3. All fans shall be provided with a raised guard to prevent contact with moving parts.

D. Refrigerant and Refrigerant Piping:

1. R-32 refrigerant shall be required for systems.

2. Polyolester (POE) oil—widely available and used in conventional domestic systems—shall be required.

3. Refrigerant piping shall be phosphorus deoxidized copper (copper and copper alloy seamless pipes) of sufficient radial thickness as defined by the VRF equipment manufacturer and installed in accordance with manufacturer recommendations.

4. All refrigerant piping must be insulated with ½" closed cell, CFC-free foam insulation with flame-Spread Index of less than 25 and a smoke-development Index of less than 50 as tested by ASTM E 84 and CAN / ULC S-102. R value of insulation must be at least 3.

5. Refrigerant line sizing shall be in accordance with manufacturer specifications.

E. Coil:

1. Outdoor Coil shall be constructed to provide equal airflow to all coil face surface are by means of a 4-sided coil.

2. Outdoor Coil shall be elevated at least 12" from the base on the unit to protect coil from freezing and snow build up in cold climates. Manufacturers in which their coil extends to within a few inches from the bottom of their cabinet frame shall provide an additional 12" of height to their stand or support structure to provide equal protection from elements as Mitsubishi Electric basis of design. Any additional support costs, equipment fencing, and tie downs required to meet this additional height shall be responsibility of Mechanical Contractor to provide.

3. The outdoor heat exchanger shall be of zinc coated aluminum construction with turbulating flat tube construction. The coil fins shall have a factory applied corrosion resistant finish. Uncoated aluminum coils/fins are not allowed.

4. The coil shall be protected with an integral metal guard.

5. Refrigerant flow from the outdoor unit shall be controlled by means of an inverter driven compressor.

6. Unit shall have prewired plugs for optional panel heaters when operating below ambient conditions of 1F to prevent any residual ice buildup from defrost.

7. Condenser coil shall have active hot gas circuit direct from compressor discharge on lowest coil face area to shed defrost condensate away from coil and protect from Ice formation after returning to standard heat pump operation. While in Heat Pump operation this lower section of the Outdoor Evaporator coil shall continually run hot gas from the compressor discharge to protect the coil from ice buildup and coil rupture.

F. Compressor:

1. Each outdoor unit module shall be equipped with only inverter driven scroll hermetic compressors.

2. Each compressor shall be equipped with a multi-port discharge mechanism to eliminate over compression at part load.

3. Crankcase heat shall be provided via induction-type heater utilizing eddy currents from motor windings.

4. Compressor shall have an inverter to modulate capacity. The capacity for each compressor shall be variable with a minimum turndown not greater than 15%.

5. The compressor shall be equipped with an internal thermal overload.

6. Field-installed oil equalization lines between modules are not allowed. Prior to bidding, manufacturers requiring equalization must submit oil line sizing calculations specific to each system and module placement for this project

G. Controls:

1. The unit shall be an integral part of the system & control network described in the controls part of this specification and react to heating/cooling demand as communicated from connected indoor e control circuit. Required field-installed control voltage transformers and/or signal boosters shall be provided by the manufacturer.

2. The outdoor unit shall have the capability of 4 levels of demand control for each refrigerant system based on external input.

H. Electrical:

1. The outdoor unit electrical power shall be 208/230 volts, 3-phase, 60 hertz or 460 volts, 3-phase, 60 hertz per equipment schedule.

2. The outdoor unit shall be controlled by integral microprocessors.

3. The control circuit between the indoor units and the outdoor unit shall be 24VDC completed using a 2-conductor, twisted pair shielded cable to provide total integration of the system.

2.2.2. P-SERIES OUTDOOR UNIT

A. General:

1. The outdoor unit shall be compatible with the five different types of indoor units (PCA - ceiling suspending, PEAD – horizontal ducted, PKA - wall mounted, PLA - ceiling cassette, PVA – ducted air handler). The connected indoor unit shall be of the same capacity as the outdoor unit. Option: Indoor unit Twinning is allowed as described in 3.02 below.
   a. Models PUZ(Y)-A24NHA7 and PUZ(Y)-A36NKA7 shall have the option to connect to two, one-half capacity, indoor units (PKA, PEAD, PLA and/or PVA type), within the same confined space, to improve air distribution (total combined indoor unit capacity shall be equal to that of the outdoor unit).
2. The outdoor unit shall be equipped with an electronic control board that interfaces with the indoor unit to perform all necessary operation functions.
3. The outdoor unit shall be capable of cooling operation down to ambient temperature of 0°F for heat pump systems and -20°F (-29°C) for cooling only systems without additional low ambient controls (optional wind baffle shall be required).
4. The outdoor unit shall be able to operate with a maximum height difference of 100 feet (30 meters) between indoor and outdoor units.
5. System shall operate at up to a maximum refrigerant tubing length as per table below between indoor and outdoor units without the need for line size changes, traps or additional oil:

PUZ-A12NKA7	100 ft (30m)
PUZ-A18NKA7	
PUZ-A24NHA7	165 ft (50m)
PUZ-A30NHA7	
PUZ-A36NKA7	
PUZ-A42NKA7	
PUY-A12NKA7	165ft (50m)
PUY-A18NKA7	
PUY-A24NHA7	225 ft (69m)
PUY-A30NHA7	
PUY-A36NKA7	
PUY-A42NKA7	

6. Models PUZ(Y)-A12/18/24/30NH/KA7 shall be pre-charged for a maximum of 70 feet (21 meters) of refrigerant tubing – PUZ(Y)-A36/42NKA7 for 100 feet (30 meters).
7. The outdoor unit shall be completely factory assembled, piped, and wired. Each unit must be test run at the factory.
8. Outdoor unit sound level shall not exceed:

Outdoor Unit Sound Level		
Model Numbers	**Cooling**	**Heating**
PUZ(Y)-A12NKA7	44 dB(A)	46 dB(A)
PUZ(Y)-A18NKA7	44 dB(A)	46 dB(A)
PUZ(Y)-A24NHA7	47 dB(A)	48 dB(A)
PUZ(Y)-A30NHA7	47 dB(A)	48 dB(A)
PUZ(Y)-A36NKA7	52 dB(A)	53 dB(A)
PUZ(Y)-A42NKA7	52 dB(A)	53 dB(A)

B. Cabinet
1. The casing shall be constructed from galvanized steel plate, finished with an electrostatically applied, thermally fused acrylic or polyester powder coating for corrosion protection and have a Munsell 3Y 7.8/1.1 finish.
2. Mounting feet shall be provided and shall be welded to the base of the cabinet and be of sufficient size to afford reliable equipment mount and stability.
3. Easy access shall be afforded to all serviceable parts by means of removable panel sections.
4. The fan grill shall be of ABS plastic.
5. Cabinet mounting and construction shall be sufficient to withstand 155 MPH wind speed conditions for use in Hurricane condition areas. Mounting, base support, and other installation to meet Hurricane Code Conditions shall be by others.

C. Fan
1. Models PUZ(Y)-A12/18/24/30NH/KA7 shall be furnished with a single DC fan motor. Model PUZ(Y)-A36/42NH/KA7 shall have two (2) DC fan motors.
2. The fan blade(s) shall be of aerodynamic design for quiet operation, and the fan motor bearings shall be permanently lubricated.
3. The outdoor unit shall have horizontal discharge airflow. The fan shall be mounted in front of the coil, pulling air across it from the rear and dispelling it through the front. The fan shall be provided with a raised guard to prevent external contact with moving parts.

D. Coil

1. The L shaped condenser coil shall be of copper tubing with flat aluminum fins to reduce debris build up and allow maximum airflow. The coil shall be protected with an integral metal guard.
2. Refrigerant flow from the condenser shall be controlled by means of an electronic linear expansion valve (LEV) metering device. The LEV shall be control by a microprocessor controlled step motor.
3. All refrigerant lines between outdoor and indoor units shall be of annealed, refrigeration grade copper tubing, ACR Type, meeting ASTM B280 requirements, individually insulated in twin-tube, flexible, closed-cell, CFC-free (ozone depletion potential of zero), elastomeric material for the insulation of refrigerant pipes and tubes with thermal conductivity equal to or better than 0.27 BTU-inch/hour per Sq Ft / °F, a water vapor transmission equal to or better than 0.08 Perm-inch and superior fire ratings such that insulation will not contribute significantly to fire and up to 1" thick insulation shall have a - Flame-Spread Index of less than 25 and a Smoke-development Index of less than 50 as tested by ASTM E 84 and CAN / ULC S-102.

E. Compressor

1. The compressor for models PUZ(Y)-A12/18/24/30/36/42NH/KA7 shall be a DC twin-rotor rotary compressor with Variable Speed Inverter Drive Technology.
2. The compressor shall be driven by inverter circuit to control compressor speed. The compressor speed shall dynamically vary to match the room load for significantly increasing the efficiency of the system which shall result in significant energy savings.
3. To prevent liquid from accumulating in the compressor during the off cycle, a minimal amount of current shall be automatically, intermittently applied to the compressor motor windings to maintain sufficient heat to vaporize any refrigerant. No crankcase heater is to be used.
4. The outdoor unit shall have an accumulator and high pressure safety switch. The compressor shall be mounted to avoid the transmission of vibration.

F. Electrical

1. The electrical power of the unit shall be 208volts or 230 volts, single phase, 60 hertz. The unit shall be capable of satisfactory operation within voltage limits of 198 volts to 253 volts.
2. Power for the indoor unit shall be supplied from the outdoor unit via Mitsubishi Electric A-Control using three (3) fourteen (14/16) gauge AWG conductors plus ground wire connecting the units.
3. The outdoor unit shall be controlled by the microprocessor located in the indoor unit.
4. The control signal between the indoor unit and the outdoor unit shall be pulse signal 24 volts DC.
5. The unit shall have Pulse Amplitude Modulation circuit to utilize 98% of input power supply.

G. Operating Range:

PART 3 - Operating Range		Indoor Air Intake Temperature	Outdoor Air Intake Temperature
Cooling	Maximum	D.B. 90°F (32°C) W.B. 73°F (23°C)	D.B. 115°F (46°C)
	Minimum	D.B. 66°F (19°C) W.B. 59°F (15°C)	D.B. PUZ: 0°F (-18°C)* / PUY: -20°F (-29°C)*
Heating**	Maximum	D.B. 82°F (28°C)	D.B. 70°F (21.1°C) W.B. 59°F (15°C)
	Minimum	D.B. 50°F (10°C)	D.B. 12°F/-4°F

* Requires wind baffle – without wind baffle: D.B. 23°F (-5°C)
** Does not apply to PUY models

1. Unit shall be able to provide 100% cooling capacity when operating at PUZ: 0°F (-18°C)* / PUY: -20°F outdoor air temperature when a wind baffle is used.

2.3. INDOOR UNITS

2.3.1 Y-SERIES 4-WAY CEILING-RECESSED CASSETTE WITH GRILLE FOR 2X2 GRID INDOOR UNIT

A. General:

1. The indoor unit shall be a four-way cassette style indoor unit that recesses into the ceiling with a ceiling grille. The indoor unit shall be factory assembled, wired and run tested. Contained within the unit shall be all factory wiring, piping, electronic modulating linear expansion device, control circuit board and fan motor. The unit shall have a self-diagnostic function, 3-minute time delay mechanism, an auto restart function, an emergency operation function and a test run switch. Indoor unit and refrigerant pipes shall be charged with dehydrated air before shipment from the factory. The unit shall be suitable for use in plenums in accordance with UL1995 ed 4.

B. Unit Cabinet:

1. The cabinet shall be a compact 22-7/16” wide x 22-7/16” deep so it will fit within a standard 24” square suspended ceiling grid.

2. The cabinet panel shall have provisions for a field installed filtered outside air intake.

3. Four-way grille shall be fixed to bottom of cabinet allowing two, three or four-way blow.

C. Fan:

1. The indoor fan shall be an assembly with a turbo fan direct driven by a single motor.

2. The indoor fan shall be statically and dynamically balanced to run on a motor with permanently lubricated bearings.

3. The indoor unit shall include an AUTO fan setting capable of maximizing energy efficiency by adjusting the fan speed based on the difference between controller set point and space temperature. The indoor fan shall be capable of five (4) speed settings, Low, Mid, High and Auto.

4. The indoor unit shall have an adjustable air outlet system offering 4-way airflow, 3-way airflow, or 2-way airflow.

5. The indoor unit vanes shall have 5 fixed positions and a swing feature that shall be capable of automatically swinging the vanes up and down for uniform air distribution.

6. Grille shall include a factory-installed “i-see” sensor, or equal, to work in conjunction with indoor unit control sequence to prevent unnecessary cooling or heating in unoccupied areas of the zone without decreasing comfort levels. Sensor must detect occupancy (not simply motion) and location of occupants by measuring size & temperature of objects within a 39’ detecting diameter (based on 8.8ft mounting height) with 1,856 or more measuring points.

D. Filter:

1. Return air shall be filtered by means of a long-life washable filter.

E. Coil:

1. The indoor coil shall be of nonferrous construction with smooth plate fins on copper tubing. The tubing shall have inner grooves for high efficiency heat exchange. All tube joints shall be brazed with phos-copper or silver alloy.

2. The coils shall be pressure tested at the factory.

3. The unit shall be provided with an integral condensate lift mechanism that will be able to raise drain water 19-3/4” inches above the condensate pan.

F. Electrical:

1. The unit electrical power shall be 208/230 volts, 1-phase, 60 hertz.

2. The system shall be capable of satisfactory operation within voltage limits of 187-228 volts (208V/60Hz) or 207-253 volts (230V/60Hz).

G. Controls:

1. Indoor unit shall compensate for the higher temperature sensed by the return air sensor compared to the temperature at level of the occupant when in HEAT mode. Disabling of compensation shall be possible for individual units to accommodate instances when compensation is not required.

2. Control board shall include contacts for control of external heat source. External heat may be energized as second stage with 1.8°F – 9.0°F adjustable deadband from set point.

3. Indoor unit shall include no less than four (4) digital inputs capable of being used for customizable control strategies.

4. Indoor unit shall include no less than three (3) digital outputs capable of being used for customizable control strategies.

5. A factory-installed drain pan sensor shall provide protection against drain pan overflow by sensing a high condensate level in the drain pan. Should this occur, the control shuts down the indoor unit before an overflow can occur. A thermistor error code will be produced should the sensor activate indicating a fault which must be resolved before the unit re-starts.

2.3.2 P-SERIES WALL MOUNTED INDOOR UNIT

A. General:

1. The wall-mounted indoor unit shall be factory assembled, wired and run tested. Contained within the unit shall be all factory wiring, piping, control circuit board and fan motor. The unit shall have a self-diagnostic function, 3-minute time delay mechanism, an auto restart function, and a test run switch. Indoor unit and refrigerant pipes shall be charged with dehydrated air before shipment from the factory.

B. Cabinet

2. All casings, regardless of model size, shall have the same white finish
3. Multi directional drain and refrigerant piping offering four (4) directions for refrigerant piping and two (2) directions for draining are required.
4. There shall be a separate back plate which secures the unit firmly to the wall.

C. Fan

1. The indoor fan shall be statically and dynamically balanced to run on a single motor with permanently lubricated bearings.

2. A manual adjustable guide vane shall be provided with the ability to change the airflow from side to side (left to right).

3. A motorized air sweep louver shall provide an automatic change in airflow by directing the air up and down to provide uniform air distribution.

D. Filter:

1. - Return air shall be filtered by means of an easily removable, washable filter.

E. Coil

1. The indoor coil shall be of nonferrous construction with smooth plate fins on copper tubing. The tubing shall have inner grooves for high efficiency heat exchange. All tube joints shall be brazed with phos-copper or silver alloy.

2. The coils shall be pressure tested at the factory.

F. Electrical

1. The electrical power of the unit shall be 208 volts or 230 volts, 1 phase, 60 hertz. The system shall be capable of satisfactory operation within voltage limits of 198 volts to 253 volts. The power to the indoor unit shall be supplied from the outdoor unit, using the Mitsubishi Electric A-Control system. For A-Control, a three (3) conductor AWG-14/16 wire with ground shall provide power feed and bi-directional control transmission between the outdoor and indoor units.

2.4. Y-SERIES CONTROLS

2.4.1 REMOTE CONTROLLERS

H. Provide remote controllers for all indoor AC heat pump units.

2.4.2 CENTRALIZED CONTROLLER (WEB-ENABLED)

A. AE-200 Centralized Controller:

1. The AE-200A Centralized Controller shall be capable of controlling a maximum of two hundred (200) indoor units across multiple CITY MULTI outdoor units with the use of three (3) AE-50A expansion controllers. The AE-200A Centralized Controller shall be approximately 11-5/32" x 7-55/64" x 2-17/32" in size and shall be powered with an integrated 100-240 VAC power supply. The AE-200A Centralized Controller shall support system configuration, daily/weekly scheduling, monitoring of operation status, night setback settings, free contact interlock configuration and malfunction monitoring. When being used alone without the expansion controllers, the AE-200A Centralized Controller shall have five basic operation controls which can be applied to an individual indoor unit, a collection of indoor units (up to 50 indoor units), or all indoor units (collective batch operation). This basic set of operation controls for the AE-200 Centralized Controller shall include on/off operation mode selection (cool, heat, auto (R2/WR2-Series only), dry, setback (R2/WR2-Series only) and fan), temperature setting, fan speed setting, and airflow direction setting. Since the AE-200A provides centralized control, it shall be able to enable or disable operation of local remote controllers. In terms of scheduling, the AE-200A Centralized Controller shall allow the user to define both daily and weekly schedules (up to 24 scheduled events per day) with operations consisting of ON/OFF, mode selection, temperature setting, air flow (vane) direction, fan speed, and permit/prohibit of remote controllers.

2. All AE-200A Centralized Controllers shall be equipped with two RJ-45 Ethernet ports to support interconnection with a network PC via a closed/direct Local Area Network (LAN) or to a network switch for IP communication to up to three AE-50A expansion controllers for display of up to two hundred (200) indoor units on the main AE-200A interface.

3. The AE-200A Centralized Controller shall be capable of performing initial settings via the high-resolution, backlit, color touch panel on the controller or via a PC browser using the initial settings.

B. AE-50A Expansion Controller:

1. The AE-50A Expansion Controller shall serve as a standalone centralized controller or as an expansion module to the AE-200A Centralized Controller for the purpose of adding up to 50 indoor units to either the main touch screen interface of the AE-200A. Up to three (3) AE-50A expansion controllers can be connected to the AE-200A via a local IP network (and their IP addresses assigned on the AE-200A) to the AE-200A to allow for up to two hundred (200) indoor units to be monitored and controlled from the AE-200A interface.

2. The AE-50A expansion controllers have all of the same capabilities to monitor and control their associated indoor units as the features specified above. Even when connected to the AE-200A and configured to display their units on the main controller, the individual indoor units connected to the AE-50A can still be monitored and controlled from the

interface of the AE-50. The last command entered will take precedence, whether at the wall controller, the AE-50A or the AE-200A Centralized Controller

2.4.3 CMCN REMOTE CONTROLLERS: SYSTEM INTEGRATION: The CMDN shall be capable of supporting integration with Building Management System (BMS):

A. BAC-HD150: BACnet® Interface:

1. The Mitsubishi Electric Cooling & Heating BACnet® interface, BAC-HD150, shall be compliant with BACnet® Protocol (ANSI/ASHRAE 135-2004) and be Certified by the (BTL) BACnet® Testing Laboratories. The BACnet® interface shall support BACnet Broadcast Management (BBMD). The BACnet® interface shall support a maximum of 50 indoor units. Operation and monitoring points include, but are not limited to, on/off, operation mode, fan speed, prohibit remote controller, filter sign reset, alarm state, error code, and error address.

2. Licenses:

- SW-BACnet Master: Master Controller license for AE-200A and EW-50A
- SW-BACnet Expansion: Expansion Controller license for AE-50A and EW-50A

3. SW-BACnet Specifications:

- Control up to 50 groups
- 1 to 16 indoor units can be collectively controlled in a group
- Supports dual set point functionality (connected model dependent)
- BTL Compliant
- BACnet communication specifications are based on ANSI/ASHRAE Standards 135-2010

4. PC Requirements:

- CPU: 1GHz or higher
- Memory: 1GB or more
- HDD Space: 100 MB or more
- Screen Resolution: 1024 x 768 or higher
- OS: Microsoft Windows 7 32-bit/64-bit, Microsoft 8.1 32-bit/64-bit. Not compatible with Windows Vista
- Execution Environment: Microsoft .NET Framework 4.5 or later
- Others: Pointing device such as a mouse, internet connection (required when installing a .NET Framework)

5. AE-200/AE-50/EW-50 BACnet Point List:

Object List
On Off Setup
On Off State, Number of ON/OFF, Cumulative operation time
Alarm Signal (4-digit error code)
Error Code
Operational Mode Setup
Operational Mode State
Fan Speed Setup
Fan Speed State
Room Temp [Water Temp]

Set Temp [Set Water Temp]
Set Temp Cool
Set Temp Heat
Set Temp Auto
Filter Sign [Circulating Water Exchange Sign]
Filter Sign Reset [Circulating Water Exchange Sign Reset]
Prohibition On Off
Prohibition Mode
Prohibition Filter Sign Reset [Prohibition Circulating Water Exchange Sign Reset]
Prohibition Set Temperature
M-NET Communication State
System Forced Off
Air Direction Setup
Air Direction State
Set High Limit Setback Temp
Set Low Limit Setback Temp
Ventilation Mode Setup
Ventilation Mode State
Air To Water Mode Setup
System Alarm Signal (4-digit error code)
PI Controller Alarm Signal (4-digit error code)
Group Apportioned Electric Energy
Interlocked Units Apportioned Electric Energy
PI controller Electric Energy 1–4
Pulse Input Electric Energy 1–4
Group Apportionment Parameter
Interlocked Units Apportionment Parameter
Night Purge State
Thermo On Off State
Trend Log Room Temp
Trend Log Group Apportioned Electric Energy
Trend Log Interlocked Units Apportioned Electric Energy
Trend Log PI controller Electric Energy 1–4
Trend Log Pulse Input Electric Energy 1–4
Trend Log Group Apportionment Parameter
Trend Log Interlocked Units Apportionment Parameter

B. BAC-HD150: BACnet® Interface:

1. The Mitsubishi Electric Cooling & Heating LonWorks® interface, LMAP04U, shall support up to fifty indoor units with a variety of network variables on a per indoor unit basis. Input variables include, but are not limited to, on/off, operation mode, fan speed, prohibit remote controller, and filter sign reset. Output variables include, but are not limited to, model size, alarm state, error code, and error address.

2.5 P-Series System Control

A. System Control:

1. The control system shall consist of a minimum of two (2) microprocessors, one on each indoor and outdoor unit, interconnected by a single non-polar two-wire cable. The microprocessor located in the indoor unit shall have the capability of monitoring return air temperature and indoor coil temperature, receiving and processing commands from a wireless or wired controller, providing emergency operation and controlling the outdoor unit. The control signal between the indoor and out

door unit shall be pulse signal 24 volts DC. Indoor units shall have the ability to control supplemental heat via connector CN24 and a 12 VDC output.

2. For A-Control, a three (3) conductor 14 gauge AWG wire with ground shall provide power feed and bi-directional control transmission between the outdoor and indoor units. . If code requires a disconnect mounted near the indoor unit, a TAZ-MS303 3-Pole Disconnect shall be used – all three conductors must be interrupted.
3. The system shall be capable of automatic restart when power is restored after power interruption. The system shall have self-diagnostics ability, including total hours of compressor run time. Diagnostics codes for indoor and outdoor units shall be displayed on the wired controller panel.
4. The indoor unit control board shall have auxiliary control contact connectors to provide:

Function / Model	PCA	PEA / PEAD	PKA	PLA
CN-2L – Lossnay Control	X	X	X	X
CN-24(152) Back-up Heat	X	X	X	X
CN-32 – Remote Switch	X	X	X	X
CN-51 – Central Control	X	X	X	X
CN-105 – IP Terminal	X	X	X	X

X = Included

B. Remote Controllers

1. All remote controllers need to be ordered separately from the unit.

C. Wireless, wall mounted remote controller kit (MHK1)

1. The Wireless, wall mounted remote controller kit (MHK1) shall consist of a wireless, wall mounted controller (MRCH1), a wireless receiver (MIFH1) and a cable (MRC1) to connect the receiver to the indoor unit. The controller shall be white in color with a light-green LCD display and a backlight feature. The MRCH1 shall consist of four Function buttons below the display, and Increase/Decrease Set Temperature buttons and a Hold button to the right of the display. The controller shall have a built-in temperature sensor and a battery holder, using two AA alkaline batteries. Temperature shall be displayed in either Fahrenheit (°F) or Celsius (°C), and temperature changes shall be by increments of 1°F (0.5°C).
2. The MHK1 uses Honeywell RedLINK™ technology, and the wireless receiver is specially designed for Mitsubishi units. Linking to the wireless network shall be done from the receiver and from the remote controller. There shall not be any interference with other wireless devices or neighboring RedLINK™ products. Communication shall be automatically restored after power resumes and after batteries are replaced.
3. The basic functions are:

Wireless, Wall Mounted Remote Controller Kit (MHK1)	
Item	**Description**
Number of Units Controllable	1 unit
ON/OFF	Run and stop operation
Operation Mode	Switches between Cool/Drying/Auto/Fan/Heat.

Wireless, Wall Mounted Remote Controller Kit (MHK1)	
Item	**Description**
Temperature Setting (Range and modes depend on connected unit model)	Controller general setpoint temperature range: Cool/Dry: 50°F-99°F Heat: 40°F-90°F Auto: 50°F-90°F Controller temperature range when connected to the PCA/PUZ system: Cool/Dry: 67°F-87°F Heat: 63°F-83°F Auto: 67°F-83°F
Fan Speed Setting (Range and modes depend on connected unit model)	Hi/Mid-2/Mid-1/Low/Auto
Air Flow Direction Setting (Air flow direction settings depend on the unit model)	Air flow direction angles 100%-80%-60%-40%, Swing.
Dual Setpoint Control	Separate heating and cooling setpoints. Adjustable deadband from 2ºF to 8ºF. Automatically adjusts setpoints to ensure deadband. System changeover with dual setpoints.
Scheduling	5-2 and 5-1-1 schedules Separate Heat/Cool schedules Allows operation in AUTO with Scheduling setbacks and dual setpoint Simple temperature setting can be done up to 4 times one day in the week. The time can be set by the 15-minute interval. Remote controller shall be programmable as either a residential controller, which will offer residential scheduling options only; or as a commercial controller, which will offer commercial scheduling options only.
Optimal Start	Set occupied time and desired set temperature Remote controller learns when to start warm up or cool down so that space is at set temperature at start of occupied time
Operating Conditions Display	Setpoint and room temperature. Default sensing is at the remote controller. Installer setting to select at return air sensor. Automatically switches to return air sensor if communication to remote controller is lost Outdoor temperature and humidity (Requires optional air sensor MOS1)
Additional Functions	Hold Function Temporary Schedule Override Reset to factory default
Error	When an error is currently occurring on an air conditioner unit, the afflicted unit and the error code are displayed

Wireless, Wall Mounted Remote Controller Kit (MHK1)	
Item	**Description**
Auto Lock Out Function	Setting/releasing of simplified locking for remote control settings can be performed. • Locking of all settings • Locking of ON/OFF setting • Locking of system setting (Heat, Cool, Off, Auto, etc.) • Locking of fan setting • Locking of temperature setting • Locking of Clock/Day/Schedule

4. Two optional devices can be used with the MHK1 controller kit. These are, an outdoor air sensor (MOS1), which allows the display of the outdoor temperature and humidity, and a portable central controller (MCCH1), which can control up to 16 zones with On/Off, set temperature, heat/cool mode selection and auto-off timer.
    a. **Wired MA Remote Controller (PAR-33MAA)**
5. The Backlit Wired MA Remote Controller shall be capable of controlling up to 16 indoor units (defined as 1 group).
6. The Backlit Wired MA Remote Controller shall only be used in same group with Wireless MA Remote Controllers (PAR-FL32MA-E / PAR-FA32MA-E) or with other Backlit Wired MA Remote Controllers (PAR-33MAA), with up to two remote controllers per group.

Wired MA Remote Controller			
Item	**Description**	**Operation**	**Display**
ON/OFF	Run and stop operation for a single group	Each Group	Each Group
Operation Mode	Switches between Cool/Drying/Auto/Fan/Heat. Operation modes vary depending on the air conditioner unit. Auto mode is available for the R2/WR2-Series only.	Each Group	Each Group
Temperature Setting	Sets the temperature from 67°F – 87°F depending on operation mode and indoor unit. Separate COOL and HEAT mode set points available depending on central controller and connected mechanical equipment.	Each Group	Each Group
Fan Speed Setting	Available fan speed settings depending on indoor unit.	Each Group	Each Group
Air Flow Direction Setting	Air flow direction settings vary depending on the indoor unit model.	Each Group	Each Group
Permit / Prohibit Local Operation	Individually prohibit operation of each local remote control function (Start/Stop, Change operation mode, Set temperature, Vane, Reset filter). *1: Centrally Controlled is displayed on the remote controller for prohibited functions.	N/A	Each Group *1
Display Indoor Unit Intake Temp	Measures and displays the intake temperature of the indoor unit when the indoor unit is operating.	N/A	Each Group
Display Backlight	Pressing a button lights up a backlight. The light automatically turns off after a certain period of time. (The brightness settings can be selected from Bright, Dark, and Light off.)	N/A	Each Unit
Error	When an error is currently occurring on an air conditioner unit, the afflicted unit and the error code are displayed	N/A	Each Unit
Test Run	Operates air conditioner units in test run mode. *2 The display for test run mode will be the same as for normal start/stop (does not display "test run").	Each Group	Each Group *2
Ventilation Equipment	Up to 16 indoor units can be connected to an interlocked system that has one LOSSNAY unit.	Each Group	N/A
Set Temperature Range Limit	Set temperature range limit for cooling, heating, or auto mode.	Each Group	Each Group
Schedule	Set up to 8 operations per day, 7 days per week. Operations include time on/off, mode and room temperature set point.	Each Group	Each Group

D. Wireless Remote Controller Kit (PAR-SL93B-E)

1. The Wireless Remote Controller Kit (PAR-SL93B-E) shall consist of a hand held wireless remote controller and a wireless receiver. The controller shall perform input functions necessary to operate the system.
2. The wireless receiver shall be plug and fit compatible with the indoor unit.
3. The controller shall have a Power On/Off switch, Mode Selector – Cool, Dry, Heat, Auto, and Powerful Modes - Temperature Setting, Timer Control, Fan Speed Select and Horizontal and Vertical Vane control selector.

4. The indoor unit shall perform Self-diagnostic Function and Check Mode switching. Temperature changes shall be in 1ºF (0.5ºC) increments with a setting range of 61 to 88ºF (16 to 31ºC).

E. Simple MA Remote Controller (PAC-YT53CRAU):

1. The Backlit Simple MA Remote Controller shall be capable of controlling up to 16 indoor units (defined as 1 group).
2. The Backlit Simple MA Remote Controller shall only be used in same group with Wireless MA Remote Controllers (PAR-FL32MA-E / PAR-FA32MA-E) or with other Backlit Simple MA Remote Controllers (PAC-YT53CRAU), with up to two remote controllers per group.

Simple MA Remote Controller			
Item	**Description**	**Operation**	**Display**
ON/OFF	Run and stop operation for a single group	Each Group	Each Group
Operation Mode	Switches between Cool/Drying/Auto/Fan/Heat/Setback. Operation modes vary depending on the air conditioner unit. Auto and Setback mode are available for the R2/WR2-Series only.	Each Group	Each Group
Temperature Setting	Sets the temperature from 40°F – 95°F depending on operation mode and indoor unit. Separate COOL and HEAT mode set points available depending on central controller and connected mechanical equipment.	Each Group	Each Group
Fan Speed Setting	Available fan speed settings depending on indoor unit.	Each Group	Each Group
Air Flow Direction Setting	Air flow direction settings vary depending on the indoor unit model.	Each Group	Each Group
Permit / Prohibit Local Operation	Individually prohibit operation of each local remote control function (Start/Stop, Change operation mode, Set temperature, Reset filter). *1: Centrally Controlled is displayed on the remote controller for prohibited functions.	N/A	Each Group *1
Display Indoor Unit Intake Temp	Measures and displays the intake temperature of the indoor unit when the indoor unit is operating.	N/A	Each Group
Display Backlight	Pressing the button lights up a backlight. The light automatically turns off after a certain period of time. (The brightness settings can be selected from Bright, Dark, and Light off.)	N/A	Each Unit
Error	When an error is currently occurring on an air conditioner unit, the afflicted unit and the error code are displayed	N/A	Each Unit
Test Run	Operates air conditioner units in test run mode. *2 The display for test run mode will be the same as for normal start/stop (does not display “test run”).	Each Group	Each Group *2
Ventilation Equipment	Up to 16 indoor units can be connected to an interlocked system that has one LOSSNAY unit.	Each Group	N/A
Set Temperature Range Limit	Set temperature range limit for cooling, heating, or auto mode.	Each Group	Each Group

F. Touch MA Remote Controller (PAR-CT01MAU-SB):

1. The Backlit Touch MA Remote Controller shall be capable of controlling up to 16 indoor units (defined as 1 group).
2. The Backlit Touch MA Remote Controller shall only be used in same group with Wireless MA Remote Controllers (PAR-FL32MA-E / PAR-FA32MA-E), with other Backlit Simple MA Remote Controllers (PAC-YT53CRAU), or with other Backlit Touch MA Controllers (PAR-CT01MAU-SB) with up to two remote controllers per group.

Touch MA Remote Controller			
Item	**Description**	**Operation**	**Display**
ON/OFF	Run and stop operation for a single group	Each Group	Each Group
Operation Mode	Switches between Cool/Drying/Auto/Fan/Heat/Setback. Operation modes vary depending on the air conditioner unit. Auto and Setback mode are available for the R2/WR2-Series only.	Each Group	Each Group
Temperature Setting	Sets the temperature from 32°F – 104°F depending on operation mode and indoor unit. Separate COOL and HEAT mode set points available depending on central controller and connected mechanical equipment.	Each Group	Each Group
Fan Speed Setting	Available fan speed settings depending on indoor unit.	Each Group	Each Group
Air Flow Direction Setting	Air flow direction settings vary depending on the indoor unit model.	Each Group	Each Group
Permit / Prohibit Local Operation	Individually prohibit operation of each local remote control function (Start/Stop, Change operation mode, Set temperature, Reset filter). *1: Centrally Controlled is displayed on the remote controller for prohibited functions.	N/A	Each Group *1
Display Indoor Unit Intake Temp	Measures and displays the intake temperature of the indoor unit when the indoor unit is operating.	N/A	Each Group
Display Backlight	Pressing the screen lights up a backlight. The light automatically turns off after a certain period of time. (The brightness settings can be selected from Bright, Dark, and Light off.)	N/A	Each Unit
Error	When an error is currently occurring on an air conditioner unit, the afflicted unit and the error code are displayed	N/A	Each Unit
Test Run	Operates air conditioner units in test run mode. *2 The display for test run mode will be the same as for normal start/stop (does not display “test run”).	Each Group	Each Group *2
Ventilation Equipment	Up to 16 indoor units can be connected to an interlocked system that has one LOSSNAY unit.	Each Group	N/A
Set Temperature Range Limit	Set temperature range limit for cooling, heating, or auto mode.	Each Group	Each Group
Display Color Change	Controller can allow for the user to change the color of the text and/or background.	Each Controller	N/A

G. IT Extender (PAC-WHS01IE-E):

1. The IT Extender is increases the distance of data traveling by the CN105 connection from 3 feet to 50 feet.

2. The IT Extender can only be used on one indoor unit.

IT Extender			
Item	**Description**	**Operation**	**Display**
Operation Mode	Transmits data from controller to indoor unit.	Each Group	Each Group

H. Wireless Temperature & Humidity Sensor for kumo Cloud (PAC-USWHS003-TH-1:

1. The Wireless Sensor transmits Temperature and Humidity information to the indoor unit.
2. Can be used in place of thermostat if requested.
3. Uses Bluetooth Low Energy with a range of 33ft (10m). Has a 1 year battery life with push notifications associated with any errors.

Wireless Temperature & Humidity Sensor for kumo Cloud			
Item	**Description**	**Operation**	**Display**
Operation Mode	Transmits data from controller to indoor unit.	Each Group	Each Group
Discover Mode	Allows the Wireless sensor to be connected to the kumo cloud app. A series of beeps indicates that the wireless sensor is in discover mode.	Each Group	Each Group
Push Notifications	Can send the user information through the kumo cloud app. Includes error messages, filter replacement information, and battery change notifications.	Each Group	Each Group

I. kumo Station (PAC-WHS01HC-E)

1. 4-Channel equipment controller with Outside Air Temperature monitoring
2. Manages and stages heat pump and supplemental heat.
3. Able to be integrated through kumo cloud.

kumo Station			
Item	**Description**	**Operation**	**Display**
Operation Mode	Transmits data from controller to indoor unit.	Each Group	Each Group
Discover Mode	Allows the Wireless sensor to be connected to the kumo cloud app. A series of beeps indicates that the wireless sensor is in discover mode.	Each Group	Each Group
Push Notifications	Can send the user information through the kumo cloud app. Includes error messages, filter replacement information, and battery change notifications.	Each Group	Each Group

J. Honeywell Outdoor Air Temperature Sensor (PN C7089U1006)

1. Sensor able to detect ambient temperature and humidity.
2. Integrates directly with kumo station to control system changeover.

Honeywell Outdoor Air Temperature Sensor (PN C7089U1006)			
Item	**Description**	**Operation**	**Display**
Operation Mode	Transmits data from sensor to kumo Station.	Each Group	Each Group

3. The microprocessor located in the indoor unit shall have the capability of sensing return air temperature and indoor coil temperature, receiving and processing commands from the wireless or a wired controller, providing emergency operation and controlling the outdoor unit.

4. Indoor units shall be equipped with an optional "i-see® Sensor" kit, providing i-See® Sensor technology providing uniform temperature detection and automatically response to adjust the set temperature to provide uniform comfort from floor to ceiling.

PART 3 - EXECUTION

3.1 INSTALLATION

A. Install units' level and plumb.

B. Install in-door units using manufacturer's standard mounting devices securely fastened to building structure.

C. Install roof-mounting outdoor units on equipment supports. Anchor units to supports with removable, cadmium-plated fasteners.

D. Install seismic restraints.

E. Install outdoor units on neoprene isolator pads.

F. Install and connect precharged refrigerant tubing to component's quick-connect fittings. Install tubing to allow access to unit.

3.2 CONNECTIONS

G. Piping installation requirements are specified in other Division 23 Sections. Drawings indicate general arrangement of piping, fittings, and specialties.

H. Install piping adjacent to unit to allow service and maintenance.

I. Ground equipment according to Division 26 Section "Grounding and Bonding for Electrical Systems."

J. Electrical Connections: Comply with requirements in Division 26 Sections for power wiring, switches, and motor controls.

3.3 FIELD QUALITY CONTROL

K. Manufacturer's Field Service: Engage a factory-authorized service representative to inspect, test, and adjust field-assembled components and equipment installation, including connections, and to assist in field testing. Report results in writing.

L. Perform the following field tests and inspections and prepare test reports:

1. Leak Test: After installation, charge system and test for leaks. Repair leaks and retest until no leaks exist.
2. Operational Test: After electrical circuitry has been energized, start units to confirm proper motor rotation and unit operation.

3. Test and adjust controls and safeties. Replace damaged and malfunctioning controls and equipment.

M. Remove and replace malfunctioning units and retest as specified above.

3.4 STARTUP SERVICE

N. Engage a factory-authorized service representative to perform startup service.

1. Complete installation and startup check according to manufacturer's written instructions.

3.5 DEMONSTRATION

A. Engage a factory-authorized service representative to train Owner's maintenance personnel to adjust, operate, and maintain units. Refer to Division 1 Section "Closeout Procedures / Demonstration and Training."

END OF SECTION 238126

SECTION 260010 - SUPPLEMENTAL REQUIREMENTS FOR ELECTRICAL

PART 1 - GENERAL

1.1 SUMMARY

A. This Section specifies supplemental requirements generally applicable to the Work specified in Division 26. This Section is also referenced by related Work specified in other Divisions.

1.2 REFERENCES

A. Abbreviations and Acronyms for Electrical Terms and Units of Measure:

1. 8P8C: An 8-position 8-contact modular jack.
2. A: Ampere, unit of electrical current.
3. AC or ac: Alternating current.
4. AFCI: Arc-fault circuit interrupter.
5. AIC: Ampere interrupting capacity.
6. AL, Al, or ALUM: Aluminum.
7. ASD: Adjustable-speed drive; also called variable-frequency drive (VFD).
8. ATS: Automatic transfer switch.
9. AWG: American wire gauge; see ASTM B258.
10. BAS: Building automation system.
11. BIL: Basic impulse insulation level.
12. BIM: Building information modeling.
13. CAD: Computer-aided design or drafting.
14. CATV: Community antenna television.
15. CB: Circuit breaker.
16. cd: Candela, the SI fundamental unit of luminous intensity.
17. CO/ALR: Copper-aluminum, revised.
18. COPS: Critical operations power system.
19. CU or Cu: Copper.
20. CU-AL or AL-CU: Copper-aluminum.
21. dB: Decibel, a unitless logarithmic ratio of two electrical, acoustical, or optical power values.
22. dB(A-weighted) or dB(A): Decibel acoustical sound pressure level with A-weighting applied in accordance with IEC 61672-1.
23. dB(adjusted) or dBa: Decibel weighted absolute noise power with respect to 3.16 pW (minus 85 dBm).
24. dBm: Decibel absolute power with respect to 1 mW.
25. DC or dc: Direct current.
26. DCOA: Designated critical operations area.
27. DDC: Direct digital control (HVAC).
28. EGC: Equipment grounding conductor.
29. ELV: Extra-low voltage.
30. EMF: Electromotive force.
31. EMI: Electromagnetic interference.
32. EPM: Electrical preventive maintenance.
33. EPS: Emergency power supply.
34. EPSS: Emergency power supply system.
35. ESS: Energy storage system.

36. EV: Electric vehicle.
37. EVPE: Electric vehicle power export equipment.
38. EVSE: Electric vehicle supply equipment.
39. fc: Footcandle, an internationally recognized unit of illuminance equal to one lumen per square foot or 10.76 lx. The simplified conversion 1 fc = 10 lx in the Specifications is common practice and considered adequate precision for building construction activities. When there are conflicts, lux is the primary unit; footcandle is specified for convenience.
40. FLC: Full-load current.
41. ft: Foot.
42. ft-cd: Foot-candle, the antiquated U.S. Standard unit of illuminance, equal to one international candle measured at a distance of one foot, that was superseded in 1948 by the unit "footcandle" after the SI unit candela (cd) replaced the international candle; see "fc,"
43. GEC: Grounding electrode conductor.
44. GFCI: Ground-fault circuit interrupter.
45. GFPE: Ground-fault protection of equipment.
46. GND: Ground.
47. HACR: Heating, air conditioning, and refrigeration.
48. HDPE: High-density polyethylene.
49. HID: High-intensity discharge.
50. HP or hp: Horsepower.
51. HVAC: Heating, ventilating, and air conditioning.
52. Hz: Hertz.
53. IBT: Intersystem bonding termination.
54. inch: Inch. To avoid confusion, the abbreviation "in." is not used.
55. IP: Ingress protection rating (enclosures); Internet protocol (communications).
56. IR: Infrared.
57. IS: Intrinsically safe.
58. IT&R: Inspecting, testing, and repair.
59. ITE: Information technology equipment.
60. kAIC: Kiloampere interrupting capacity.
61. kcmil or MCM: One thousand circular mils.
62. kV: Kilovolt.
63. kVA: Kilovolt-ampere.
64. kVAr or kVAR: Kilovolt-ampere reactive.
65. kW: Kilowatt.
66. kWh: Kilowatt-hour.
67. LAN: Local area network.
68. lb: Pound (weight).
69. lbf: Pound (force).
70. LCD: Liquid-crystal display.
71. LCDI: Leakage-current detector-interrupter.
72. LED: Light-emitting diode.
73. Li-ion: Lithium-ion.
74. lm: Lumen, the SI derived unit of luminous flux.
75. LNG: Liquefied natural gas.
76. LP-Gas: Liquefied petroleum gas.
77. LRC: Locked-rotor current.
78. LV: Low voltage.
79. lx: Lux, the SI derived unit of illuminance equal to one lumen per square meter.
80. m: Meter.
81. MCC: Motor-control center.
82. MDC: Modular data center.
83. MG set: Motor-generator set.

84. MIDI: Musical instrument digital interface.
85. MLO: Main lugs only.
86. MV: Medium voltage.
87. MVA: Megavolt-ampere.
88. mW: Milliwatt.
89. MW: Megawatt.
90. MWh: Megawatt-hour.
91. NC: Normally closed.
92. Ni-Cd: Nickel-cadmium.
93. Ni-MH: Nickel-metal hydride.
94. NIU: Network interface unit.
95. NO: Normally open.
96. NPT: National (American) standard pipe taper.
97. OCPD: Overcurrent protective device.
98. ONT: Optical network terminal.
99. PC: Personal computer.
100. PCS: Power conversion system.
101. PCU: Power-conditioning unit.
102. PF or pf: Power factor.
103. PHEV: Plug-in hybrid electric vehicle.
104. PLC: Programmable logic controller.
105. PLFA: Power-limited fire alarm.
106. PoE: Power over Ethernet.
107. PV: Photovoltaic.
108. PVC: Polyvinyl chloride.
109. pW: Picowatt.
110. RFI: (electrical) Radio-frequency interference; (contract) Request for interpretation.
111. RMS or rms: Root-mean-square.
112. RPM or rpm: Revolutions per minute.
113. SCADA: Supervisory control and data acquisition.
114. SCR: Silicon-controlled rectifier.
115. SPD: Surge protective device.
116. sq.: Square.
117. SWD: Switching duty.
118. TCP/IP: Transmission control protocol/Internet protocol.
119. TEFC: Totally enclosed fan-cooled.
120. TR: Tamper resistant.
121. TVSS: Transient voltage surge suppressor.
122. UL: (standards) Underwriters Laboratories, Inc.; (product categories) UL, LLC.
123. UL CCN: UL Category Control Number.
124. UPS: Uninterruptible power supply.
125. USB: Universal serial bus.
126. UV: Ultraviolet.
127. V: Volt, unit of electromotive force.
128. V(ac): Volt, alternating current.
129. V(dc): Volt, direct current.
130. VA: Volt-ampere, unit of complex electrical power.
131. VAR: Volt-ampere reactive, unit of reactive electrical power.
132. VFC: Variable-frequency controller.
133. VOM: Volt-ohm-multimeter.
134. VPN: Virtual private network.
135. VRLA: Valve regulated lead acid; also called "sealed lead acid (SLA)" or "valve regulated sealed lead acid."
136. W: Watt, unit of real electrical power.

137. Wh: Watt-hour, unit of electrical energy usage.
138. WPT: Wireless power transfer.
139. WPTE: Wireless power transfer equipment.
140. WR: Weather resistant.

B. Abbreviations and Acronyms for Electrical Raceway Types:

1. CR: Communications raceway.
2. CR-GP: General-purpose communications raceway.
3. CR-P: Plenum communications raceway.
4. CR-R: Riser communications raceway.
5. EMT: Electrical metallic tubing.
6. EMT-A: Aluminum electrical metallic tubing.
7. EMT-S: Steel electrical metallic tubing.
8. EMT-SS: Stainless steel electrical metallic tubing.
9. ENT: Electrical nonmetallic tubing.
10. EPEC: Electrical HDPE underground conduit (thin wall).
11. EPEC-A: Type A electrical HDPE underground conduit.
12. EPEC-B: Type B electrical HDPE underground conduit.
13. ERMC: Electrical rigid metal conduit.
14. ERMC-A: Aluminum electrical rigid metal conduit.
15. ERMC-S: Steel electrical rigid metal conduit.
16. ERMC-S-G: Galvanized-steel electrical rigid metal conduit.
17. ERMC-S-PVC: PVC-coated-steel electrical rigid metal conduit.
18. ERMC-SS: Stainless steel electrical rigid metal conduit.
19. FMC: Flexible metal conduit.
20. FMC-A: Aluminum flexible metal conduit.
21. FMC-S: Steel flexible metal conduit.
22. FMT: Steel flexible metallic tubing.
23. FNMC: Flexible nonmetallic conduit. See "LFNC."
24. HDPE: HDPE underground conduit (thick wall).
25. HDPE-40: Schedule 40 HDPE underground conduit.
26. HDPE-80: Schedule 80 HDPE underground conduit.
27. IMC: Steel electrical intermediate metal conduit.
28. LFMC: Liquidtight flexible metal conduit.
29. LFMC-A: Aluminum liquidtight flexible metal conduit.
30. LFMC-S: Steel liquidtight flexible metal conduit.
31. LFMC-SS: Stainless steel liquidtight flexible metal conduit.
32. LFNC: Liquidtight flexible nonmetallic conduit.
33. LFNC-A: Layered (Type A) liquidtight flexible nonmetallic conduit.
34. LFNC-B: Integral (Type B) liquidtight flexible nonmetallic conduit.
35. LFNC-C: Corrugated (Type C) liquidtight flexible nonmetallic conduit.
36. PVC: Rigid PVC conduit.
37. PVC-40: Schedule 40 rigid PVC conduit.
38. PVC-80: Schedule 80 rigid PVC Conduit.
39. PVC-A: Type A rigid PVC concrete-encased conduit.
40. PVC-EB: Type EB rigid PVC concrete-encased underground conduit.
41. RGS: See ERMC-S-G.
42. RMC: See ERMC.
43. RTRC: Reinforced thermosetting resin conduit.
44. RTRC-AG: Low-halogen, aboveground reinforced thermosetting resin conduit.
45. RTRC-AG-HW: Heavy wall, low-halogen, aboveground reinforced thermosetting resin conduit.

46. RTRC-AG-SW: Standard wall, low-halogen, aboveground reinforced thermosetting resin conduit.
47. RTRC-AG-XW: Extra heavy wall, low-halogen, aboveground reinforced thermosetting resin conduit.
48. RTRC-BG: Low-halogen, belowground reinforced thermosetting resin conduit.

C. Abbreviations and Acronyms for Electrical Single-Conductor and Multiple-Conductor Cable Types:

1. AC: Armored cable.
2. CATV: Coaxial general-purpose cable.
3. CATVP: Coaxial plenum cable.
4. CATVR: Coaxial riser cable.
5. CI: Circuit integrity cable.
6. CL2: Class 2 cable.
7. CL2P: Class 2 plenum cable.
8. CL2R: Class 2 riser cable.
9. CL2X: Class 2 cable, limited use.
10. CL3: Class 3 cable.
11. CL3P: Class 3 plenum cable.
12. CL3R: Class 3 riser cable.
13. CL3X: Class 3 cable, limited use.
14. CM: Communications general-purpose cable.
15. CMG: Communications general-purpose cable.
16. CMP: Communications plenum cable.
17. CMR: Communications riser cable.
18. CMUC: Under-carpet communications wire and cable.
19. CMX: Communications cable, limited use.
20. DG: Distributed generation cable.
21. FC: Flat cable.
22. FCC: Flat conductor cable.
23. FPL: Power-limited fire-alarm cable.
24. FPLP: Power-limited fire-alarm plenum cable.
25. FPLR: Power-limited fire-alarm riser cable.
26. IGS: Integrated gas spacer cable.
27. ITC: Instrumentation tray cable.
28. ITC-ER: Instrumentation tray cable, exposed run.
29. MC: Metal-clad cable.
30. MC-HL: Metal-clad cable, hazardous location.
31. MI: Mineral-insulated, metal-sheathed cable.
32. MTW: (machine tool wiring) Moisture-, heat-, and oil-resistant thermoplastic cable.
33. MV: Medium-voltage cable.
34. NM: Nonmetallic sheathed cable.
35. NMC: Nonmetallic sheathed cable with corrosion-resistant nonmetallic jacket.
36. NMS: Nonmetallic sheathed cable with signaling, data, and communications conductors, plus power or control conductors.
37. NPLF: Non-power-limited fire-alarm circuit cable.
38. NPLFP: Non-power-limited fire-alarm circuit cable for environmental air spaces.
39. NPLFR: Non-power-limited fire-alarm circuit riser cable.
40. NUCC: Nonmetallic underground conduit with conductors.
41. OFC: Conductive optical fiber general-purpose cable.
42. OFCG: Conductive optical fiber general-purpose cable.
43. OFCP: Conductive optical fiber plenum cable.
44. OFCR: Conductive optical fiber riser cable.

45. OFN: Nonconductive optical fiber general-purpose cable.
46. OFNG: Nonconductive optical fiber general-purpose cable.
47. OFNP: Nonconductive optical fiber plenum cable.
48. OFNR: Nonconductive optical fiber riser cable.
49. P: Marine shipboard cable.
50. PLTC: Power-limited tray cable.
51. PLTC-ER: Power-limited tray cable, exposed run.
52. PV: Photovoltaic cable.
53. RHH: (high heat) Thermoset rubber, heat-resistant cable.
54. RHW: Thermoset rubber, moisture-resistant cable.
55. SA: Silicone rubber cable.
56. SE: Service-entrance cable.
57. SER: Service-entrance cable, round.
58. SEU: Service-entrance cable, flat.
59. SIS: Thermoset cable for switchboard and switchgear wiring.
60. TBS: Thermoplastic cable with outer braid.
61. TC: Tray cable.
62. TC-ER: Tray cable, exposed run.
63. TC-ER-HL: Tray cable, exposed run, hazardous location.
64. THW: Thermoplastic, heat- and moisture-resistant cable.
65. THHN: Thermoplastic, heat-resistant cable with nylon jacket outer sheath.
66. THHW: Thermoplastic, heat- and moisture-resistant cable.
67. THWN: Thermoplastic, moisture- and heat-resistant cable with nylon jacket outer sheath.
68. TW: Thermoplastic, moisture-resistant cable.
69. UF: Underground feeder and branch-circuit cable.
70. USE: Underground service-entrance cable.
71. XHH: Cross-linked polyethylene, heat-resistant cable.
72. XHHW: Cross-linked polyethylene, heat- and moisture-resistant cable.

D. Definitions:

1. 8-Position 8-Contact (8P8C) Modular Jack: An unkeyed jack with up to eight contacts commonly used to terminate twisted-pair and multiconductor Ethernet cable. Also called a "TIA-1096 miniature 8-position series jack" (8PSJ), or an "IEC 8877 8-pole jack."
   a. Be careful when suppliers use "RJ45" generically. Obsolete RJ45 jacks used for analog telephone cables have rejection keys. 8P8C jacks used for digital telephone cables and Ethernet cables do not have rejection keys.
2. Basic Impulse Insulation Level (BIL): Reference insulation level expressed in impulse crest voltage with a standard wave not longer than 1.5 times 50 microseconds and 1.5 times 40 microseconds.
3. Cable: In accordance with NIST NBS Circular 37 and IEEE standards, in the United States for the purpose of interstate commerce, the definition of "cable" is (1) a conductor with insulation, or a stranded conductor with or without insulation (single-conductor cable); or (2) a combination of conductors insulated from one another (multiple-conductor cable).
4. Communications Jack: A fixed connecting device designed for insertion of a communications cable plug.
5. Communications Outlet: One or more communications jacks, or cables and plugs, mounted in a box or ring, with a suitable protective cover.
6. Conductor: In accordance with NIST NBS Circular 37 and IEEE standards, in the United States for the purpose of interstate commerce, the definition of "conductor" is (1) a wire or combination of wires not insulated from one another, suitable for carrying an electric current; (2) (National Electrical Safety Code) a material, usually in the form of wire, cable,

or bar, suitable for carrying an electric current; or (3) (general) a substance or body that allows a current of electricity to pass continuously along it.

7. Designated Seismic System: A system component that requires design in accordance with Ch. 13 of ASCE/SEI 7 and for which the Component Importance Factor is greater than 1.0.
8. Direct Buried: Installed underground without encasement in concrete or other protective material.
9. Enclosure: The case or housing of an apparatus, or the fence or wall(s) surrounding an installation, to prevent personnel from accidentally contacting energized parts or to protect the equipment from physical damage. Types of enclosures and enclosure covers include the following:
    a. Cabinet: An enclosure that is designed for either surface mounting or flush mounting and is provided with a frame, mat, or trim in which a swinging door or doors are or can be hung.
    b. Concrete Box: A box intended for use in poured concrete.
    c. Conduit Body: A means for providing access to the interior of a conduit or tubing system through one or more removable covers at a junction or terminal point. In the United States, conduit bodies are listed in accordance with outlet box requirements.
    d. Conduit Box: A box having threaded openings or knockouts for conduit, EMT, or fittings.
    e. Cutout Box: An enclosure designed for surface mounting that has swinging doors or covers secured directly to and telescoping with the walls of the enclosure.
    f. Device Box: A box with provisions for mounting a wiring device directly to the box.
    g. Extension Ring: A ring intended to extend the sides of an outlet box or device box to increase the box depth, volume, or both.
    h. Floor Box: A box mounted in the floor intended for use with a floor box cover and other components to complete the floor box enclosure.
    i. Floor-Mounted Enclosure: A floor box and floor box cover assembly with means to mount in the floor that is sealed against the entrance of scrub water at the floor level.
    j. Floor Nozzle: An enclosure used on a wiring system, intended primarily as a housing for a receptacle, provided with a means, such as a collar, for surface-mounting on a floor, which may or may not include a stem to support it above the floor level, and is sealed against the entrance of scrub water at the floor level.
    k. Junction Box: A box with a blank cover that joins different runs of raceway or cable and provides space for connection and branching of the enclosed conductors.
    l. Outlet Box: A box that provides access to a wiring system having pryout openings, knockouts, threaded entries, or hubs in either the sides or the back, or both, for the entrance of conduit, conduit or cable fittings, or cables, with provisions for mounting an outlet box cover, but without provisions for mounting a wiring device directly to the box.
    m. Pedestal Floor Box Cover: A floor box cover that, when installed as intended, provides a means for typically vertical or near-vertical mounting of receptacle outlets above the floor's finished surface.
    n. Pull Box: A box with a blank cover that joins different runs of raceway and provides access for pulling or replacing the enclosed cables or conductors.
    o. Raised-Floor Box: A floor box intended for use in raised floors.
    p. Recessed Access Floor Box: A floor box with provisions for mounting wiring devices below the floor surface.
    q. Recessed Access Floor Box Cover: A floor box cover with provisions for passage of cords to recessed wiring devices mounted within a recessed floor box.
    r. Ring: A sleeve, which is not necessarily round, used for positioning a recessed wiring device flush with the plaster, concrete, drywall, or other wall surface.

s. Ring Cover: A box cover, with raised center portion to accommodate a specific wall or ceiling thickness, for mounting wiring devices or luminaires flush with the surface.
t. Termination Box: An enclosure designed for installation of termination base assemblies consisting of bus bars, terminal strips, or terminal blocks with provision for wire connectors to accommodate incoming or outgoing conductors, or both.

10. Emergency Systems: Those systems legally required and classed as emergency by municipal, state, federal, or other codes, or by any governmental agency having jurisdiction that are designed to ensure continuity of lighting, electrical power, or both, to designated areas and equipment in the event of failure of the normal supply for safety to human life.
11. Essential Electrical Systems: (healthcare facilities) Those systems designed to ensure continuity of electrical power to designated areas and functions of a healthcare facility during disruption of normal power sources, and also to minimize disruption within the internal wiring system.
12. Fault Limited: Providing or being served by a source of electrical power that is limited to not more than 100 W when tested in accordance with UL 62368-1.
    a. The term "fault limited" is intended to encompass most Class 1, 2, and 3 power-limited sources complying with Article 725 of NFPA 70; Class ES1 and ES2 electrical energy sources that are Class PS1 electrical power sources (e.g., USB); and Class ES3 electrical energy sources that are Class PS1 and PS2 electrical power sources (e.g., PoE). See UL 62368-1 for discussion of classes of electrical energy sources and classes of electrical power sources.
13. High-Performance Building: A building that integrates and optimizes on a life-cycle basis all major high-performance attributes, including energy conservation, environment, safety, security, durability, accessibility, cost-benefit, productivity, sustainability, functionality, and operational considerations.
14. Jacket: A continuous nonmetallic outer covering for conductors or cables.
15. Luminaire: A complete lighting unit consisting of a light source such as a lamp, together with the parts designed to position the light source and connect it to the power supply. It may also include parts to protect the light source or the ballast or to distribute the light.
16. Mode: The terms "Active Mode," "Off Mode," and "Standby Mode" are used as defined in the Energy Independence and Security Act (EISA) of 2007.
17. Multi-Outlet Assembly: A type of surface, flush, or freestanding raceway designed to hold conductors, receptacles, and switches, assembled in the field or at the factory.
18. Plenum: A compartment or chamber to which one or more air ducts are connected and that forms part of the air distribution system.
19. Receptacle: A fixed connecting device arranged for insertion of a power cord plug. Also called a power jack.
20. Receptacle Outlet: One or more receptacles mounted in a box with a suitable protective cover.
21. Sheath: A continuous metallic covering for conductors or cables.
22. UL Category Control Number (CCN): An alphabetic or alphanumeric code used to identify product categories covered by UL's Listing, Classification, and Recognition Services.
23. Voltage Class: For specified circuits and equipment, voltage classes are defined as follows:
    a. Control Voltage: Having electromotive force between any two conductors, or between a single conductor and ground, that is supplied from a battery or other Class 2 or Class 3 power-limited source.
    b. Line Voltage: (1) (controls) Designed to operate using the supplied low-voltage power without transformation. (2) (transmission lines, transformers, SPDs) The line-to-line voltage of the supplying power system.

c. Extra-Low Voltage (ELV): Not having electromotive force between any two conductors, or between a single conductor and ground, exceeding 30 V(ac rms), 42 V(ac peak), or 60 V(dc).
d. Low Voltage (LV): Having electromotive force between any two conductors, or between a single conductor and ground, that is rated above 30 V but not exceeding 1000 V.
e. Medium Voltage (MV): Having electromotive force between any two conductors, or between a single conductor and ground, that is rated about 1 kV but not exceeding 69 kV.
f. High Voltage: (1) (circuits) Having electromotive force between any two conductors, or between a single conductor and ground, that is rated above 69 kV but not exceeding 230 kV. (2) (safety) Having sufficient electromotive force to inflict bodily harm or injury.

24. Wire: In accordance with NIST NBS Circular 37 and IEEE standards, in the United States for the purpose of interstate commerce, the definition of "wire" is a slender rod or filament of drawn metal. A group of small wires used as a single wire is properly called a "stranded wire." A wire or stranded wire covered with insulation is properly called an "insulated wire" or a "single-conductor cable." Nevertheless, when the context indicates that the wire is insulated, the term "wire" will be understood to include the insulation.

1.3 COORDINATION

A. Interruption of Existing Electrical Service: Do not interrupt electrical service to facilities occupied by Owner or others unless permitted under the following conditions:

1. Notify Owner no fewer than seven 7 days in advance of proposed interruption of electrical service.
2. Do not proceed with interruption of electrical service without Owner's written permission.
3. Coordinate interruption with systems impacted by outage including, but not limited to, the following:
   a. Exercising generators.
   b. Emergency lighting.
   c. Elevators.
   d. Fire alarm systems.

1.4 PREINSTALLATION MEETINGS

A. Electrical Preconstruction Conference: Schedule conference with Architect and Owner, not later than 10 days after notice to proceed. Agenda topics include, but are not limited to, the following:

1. Electrical installation schedule.
2. Status of power system studies.
3. Value analysis proposals and requests for substitution of electrical equipment.
4. Utility work coordination and class of service requests.
5. Commissioning activities.
6. Sustainability activities, including Measurement and Verification Plan.

1.5 SEQUENCING

A. Conduct and submit results of power system studies before submitting Product Data and Shop Drawings for electrical equipment.

1.6 ACTION SUBMITTALS

A. Coordination drawings.

1.7 INFORMATIONAL SUBMITTALS

A. Electrical installation schedule.

B. Welding certificates.

1.8 CLOSEOUT SUBMITTALS

A. Operation and maintenance data.

B. Software and firmware operational documentation.

1.9 QUALITY ASSURANCE

A. Qualifications: Prepare and submit qualification statements for the following entities performing Work on Project:

1. Low-Voltage Electrical Testing and Inspecting Agency: Entities possessing active credentials from a qualified electrical testing laboratory recognized by authorities having jurisdiction.
   a. On-site electrical testing supervisors must have documented certification and experience with testing electrical equipment in accordance with NETA testing standards.

PART 2 - PRODUCTS

2.1 SUBSTITUTION LIMITATIONS FOR ELECTRICAL EQUIPMENT

A. Substitution requests for electrical equipment will be entertained under the following conditions:

1. Notification of Contractor's intent to request substitutions for convenience must be declared during the Electrical Preconstruction Conference so potential risks to system performance and construction schedule may be identified for Contractor's response in submission of the substitution request. Submission of requests for substitutions for convenience must meet the conditions and deadline specified in Section 012500 "Substitution Procedures" to receive approval.
2. For electrical equipment and systems, substitutions for cause are considered major construction risks. If it is possible that Contractor may need to request substitutions for

cause because of equipment unavailability, or inability to meet construction schedule because of lead time, Contractor must declare the possibility during the Electrical Preconstruction Conference to permit establishing a mitigation plan for minimizing risks to system performance and construction schedule.

PART 3 - EXECUTION

3.1 PREPARATION

A. Electrical Installation Schedule: At preconstruction meeting, and periodically thereafter as dates change, provide schedule for electrical installation Work to Owner and Architect including, but not limited to, milestone dates for the following activities:

1. Submission of specified coordination drawings.
2. Submission of action submittals specified in Division 26.
3. Orders placed for major electrical equipment.
4. Arrival of major electrical equipment on-site.
5. Preinstallation meetings specified in Division 26.
6. Utility service outages.
7. Utility service inspection and activation.
8. Mockup reviews.
9. Closing of walls and ceilings containing electrical Work.
10. System startup, testing, and commissioning activities for major electrical equipment.
11. Pouring of concrete housekeeping pads for electrical equipment and testing of concrete samples.
12. Requests for special inspections.
13. Requests for inspections by authorities having jurisdiction.

B. Coordination Drawings for Structural Supports: Show coordination of structural supports for equipment and devices, including restraints and bracing for control of seismic and wind loads, with other systems, equipment, and structural supports in the vicinity.

C. Coordination Drawings for Conduit Routing: Conduit routing plans, drawn to scale, on which the following items are shown and coordinated with each other, using input from installers of items involved:

1. Structural members in paths of conduit groups with common supports.
2. HVAC and plumbing items and architectural features in paths of conduit groups with common supports.

D. Coordination Drawings for Large Equipment Indoor Installations:

1. Location plan, drawn to scale, showing heavy equipment or truck access paths to loading dock or other freight access into building. Indicate available width and height of doors or openings.
2. Floor plan for entry floor and floor where equipment is located, drawn to scale, showing heavy equipment access paths for maintenance and replacement, with the following items shown and coordinated with each other, based on input from installers of the items involved:
   a. Dimensioned concrete bases, outlines of equipment, conduit entries, and grounding equipment locations.

b. If freight elevator must be used, indicate width and height of door and depth of car. Indicate if large equipment must be tipped to use elevator.
c. Dimensioned working clearances and dedicated areas below and around electrical equipment where obstructions and tripping hazards are prohibited.

3. Reflected ceiling plans for entry floor and floor where equipment is located, drawn to scale, on which the following items shown and coordinated with each other, based on input from installers of the items involved:
   a. Support locations, type of support, and weight on each support. Locate structural supports for structure-supported raceways, busways, .
   b. Location of lighting fixtures, sprinkler piping and sprinklers, ducts and diffusers, and other obstructions, indicating available overhead clearance.
   c. Dimensioned working clearances and dedicated areas above and around electrical equipment where foreign systems and equipment are prohibited.

E. Coordination Drawings for Large Equipment Outdoor Installations:

1. Utilities site plan, drawn to scale, showing heavy equipment or truck access paths for maintenance and replacement, with the following items shown and coordinated with each other, based on input from installers of the items involved:
   a. Fences and walls, dimensioned concrete bases, outlines of equipment, conduit entries, and grounding and bonding locations.
   b. Indicate clear dimensions for fence gates and wall openings.
   c. Indicate depth and type of ground cover, and locations of trees, shrubbery, and other obstructions in access path.
   d. Indicate clear height below tree branches, overhead lines, bridges, and other overhead obstructions in access path, or where cranes and hoists will be needed to handle large electrical equipment.
   e. Support locations, type of support, and weight on each support. Locate structural supports for structure-supported raceways , busways, .
   f. Dimensioned working clearances and dedicated areas around electrical equipment.

F. Coordination Drawings for Duct Banks:

1. Show duct profiles and coordination with other utilities and underground structures.
2. Include plans and sections, drawn to scale, and show bends and locations of expansion fittings.

3.2 DELEGATED DESIGN OF STRUCTURAL PENETRATIONS

A. Engage qualified structural professional engineer to design penetrations of structural masonry walls.

B. Delegated Design Drawings for Structural Masonry Wall Penetrations: Where indicated on Drawings, provide reflected ceiling plan(s), supplemented by elevations, sections, and other details, drawn to scale, signed and sealed by a qualified structural professional engineer, on which the following items are shown and coordinated with each other, using input from installers of the items involved:

1. Location and dimensions of structural members supporting wall.
2. Location and dimensions of columns near penetrations.
3. Location and dimension of headers and lintels.
4. Doors and windows near penetrations.

5. Location and dimensions of penetrating cuts.
6. Sprinkler piping and sleeves.
7. Plumbing piping and sleeves.
8. Ductwork and sleeves.
9. Cable tray and sleeves.
10. Conduit and sleeves.
11. Firestopping assemblies for rated penetrations.
12. Structural supports for piping, ductwork, and conduit on both sides of wall.

3.3 INSTALLATION OF ELECTRICAL WORK

A. Unless more stringent requirements are specified in the Contract Documents or manufacturers' written instructions, comply with NFPA 70 and NECA NEIS 1 for installation of Work specified in Division 26. Consult Architect for resolution of conflicting requirements.

3.4 SYSTEM STARTUP

3.5 FIELD QUALITY CONTROL

A. Administrant for Low-Voltage Electrical Tests and Inspections:

1. will engage qualified low-voltage electrical testing and inspecting agency to administer and perform tests and inspections.
2. Engage qualified low-voltage electrical testing and inspecting agency to administer and perform tests and inspections.

B. Administrant for Structural Tests and Inspections:

1. will engage qualified structural testing and inspecting agency to administer and perform tests and inspections.
2. Engage qualified structural testing and inspecting agency to administer and perform tests and inspections.

3.6 CLOSEOUT ACTIVITIES

A. Operation and Maintenance Data: Prepare and submit the following:

1. Provide emergency operation, normal operation, and preventive maintenance manuals for each system, equipment, and device listed below:
   a. New Switchgear.
2. Include the following information:
   a. Manufacturer's operating specifications.
   b. User's guides for software and hardware.
   c. Schedule of maintenance material items recommended to be stored at Project site.
   d. Detailed instructions covering operation under both normal and abnormal conditions.
   e. Time-current curves for overcurrent protective devices and manufacturer's written instructions for testing and adjusting their settings.
   f. List of load-current and overload-relay heaters with related motor nameplate data.

g. List of lamp types and photoelectric relays used on Project, with ANSI and manufacturers' codes.
h. Manufacturer's instructions for setting field-adjustable components.
i. Manufacturer's instructions for testing, adjusting, and reprogramming microprocessor controls.
j. EPSS: Manufacturer's system checklists, maintenance schedule, and maintenance log sheets in accordance with NFPA 110.
k. Exterior pole inspection and repair procedures.
l. Include copies of demonstration and training videos.

B. Software and Firmware Operational Documentation: Provide software and firmware operational documentation in Facility EPM Program Binders, including the following:

1. Software operating and upgrade manuals.
2. Names, versions, and website addresses for locations of installed software.
3. Device address list.
4. Printout of software application and graphic screens.
5. Testing and adjusting of panic and emergency power features.
6. For lighting controls, include the following:
   a. Adjustments of scene preset controls, adjustable fade rates, and fade overrides.
   b. Operation of adjustable zone controls.

C. Software:

1. Program Software Backup: Provide username and password for approved online or cloud solution and USB media that is clearly and permanently labeled with attached placard on lanyard to prevent misplacement.
2. Provide to Owner upgrades and unrestricted licenses for installed and backup software, including operating systems and programming tools required for operation and maintenance.

END OF SECTION 260010

SECTION 260500 - COMMON WORK RESULTS FOR ELECTRICAL

PART 1 - GENERAL

1.1 RELATED DOCUMENTS

A. Drawings and general provisions of the Contract, including General and Supplementary Conditions and Division 01 Specification Sections, apply to this Section.

1.2 SUMMARY

A. Section Includes:

1. Electrical equipment coordination and installation.
2. Sleeves for raceways and cables.
3. Sleeve seals.
4. Grout.
5. Common electrical installation requirements.

1.3 DEFINITIONS

A. EPDM: Ethylene-propylene-diene terpolymer rubber.

1.4 SUBMITTALS

A. Product Data: For sleeve seals.

1.5 COORDINATION

A. Coordinate arrangement, mounting, and support of electrical equipment:

1. To allow maximum possible headroom unless specific mounting heights that reduce headroom are indicated.
2. To provide for ease of disconnecting the equipment with minimum interference to other installations.
3. To allow right of way for piping and conduit installed at required slope.
4. So connecting raceways, cables, wireways, cable trays, and busways will be clear of obstructions and of the working and access space of other equipment.

B. Coordinate installation of required supporting devices and set sleeves in cast-in-place concrete, masonry walls, and other structural components as they are constructed.

C. Coordinate location of access panels and doors for electrical items that are behind finished surfaces or otherwise concealed.

D. Coordinate sleeve selection and application with selection and application of firestopping specified in Division 07.

E. Coordinate with asbestos abatement plans and specifications and with abatement contractor for all work that potentially will disturb asbestos.

PART 2 - PRODUCTS

2.1 MANUFACTURERS

A. In other Part 2 articles where titles below introduce lists, the following requirements apply to product selection:

1. Available Manufacturers: Subject to compliance with requirements, manufacturers offering products that may be incorporated into the Work include but are not limited to, manufacturers specified.
2. Manufacturers: Subject to compliance with requirements, provide products by one of the manufacturers specified.

2.2 SLEEVES FOR RACEWAYS AND CABLES

A. Steel Pipe Sleeves: ASTM A 53/A 53M, Type E, Grade B, Schedule 40, galvanized steel, plain ends.

B. Cast-Iron Pipe Sleeves: Cast or fabricated "wall pipe," equivalent to ductile-iron pressure pipe, with plain ends and integral waterstop, unless otherwise indicated.

C. Sleeves for Rectangular Openings: Galvanized sheet steel.

1. Minimum Metal Thickness:

a. For sleeve cross-section rectangle perimeter less than 50 inches and no side more than 16 inches, thickness shall be 0.052 inch.
b. For sleeve cross-section rectangle perimeter equal to, or more than, 50 inches and 1 or more sides equal to, or more than, 16 inches, thickness shall be 0.138 inch.

2.3 SLEEVE SEALS

A. Description: Modular sealing device, designed for field assembly, to fill annular space between sleeve and raceway or cable.

1. Manufacturers: Subject to compliance with requirements.
2. Basis-of-Design Product: Subject to compliance with requirements, provide product indicated on Drawings or comparable product by one of the following:

a. Advance Products & Systems, Inc.
b. Calpico, Inc.
c. Metraflex Co.
d. Pipeline Seal and Insulator, Inc.
e. Or Approved Equal.

3. Sealing Elements: EPDM interlocking links shaped to fit surface of cable or conduit. Include type and number required for material and size of raceway or cable.
4. Pressure Plates: Plastic. Include two for each sealing element.
5. Connecting Bolts and Nuts: Stainless steel of length required to secure pressure plates to sealing elements. Include one for each sealing element.

2.4 GROUT

A. Nonmetallic, Shrinkage-Resistant Grout: ASTM C 1107, factory-packaged, nonmetallic aggregate grout, noncorrosive, nonstaining, mixed with water to consistency suitable for application and a 30-minute working time.

PART 3 - EXECUTION

3.1 COMMON REQUIREMENTS FOR ELECTRICAL INSTALLATION

A. Comply with NECA 1.

B. Measure indicated mounting heights to bottom of unit for suspended items and to center of unit for wall-mounting items.

C. Headroom Maintenance: If mounting heights or other location criteria are not indicated, arrange and install components and equipment to provide maximum possible headroom consistent with these requirements.

D. Equipment: Install to facilitate service, maintenance, and repair or replacement of components of both electrical equipment and other nearby installations. Connect in such a way as to facilitate future disconnecting with minimum interference with other items in the vicinity.

E. Right of Way: Give to piping systems installed at a required slope.

3.2 SLEEVE INSTALLATION FOR ELECTRICAL PENETRATIONS

A. Electrical penetrations occur when raceways, cables, wireways, cable trays, or busways penetrate concrete slabs, concrete or masonry walls, or fire-rated floor and wall assemblies.

B. Concrete Slabs and Walls: Install sleeves for penetrations unless core-drilled holes or formed openings are used. Install sleeves during erection of slabs and walls.

C. Use pipe sleeves unless penetration arrangement requires rectangular sleeved opening.

D. Fire-Rated Assemblies: Install sleeves for penetrations of fire-rated floor and wall assemblies unless openings compatible with firestop system used are fabricated during construction of floor or wall.

E. Cut sleeves to length for mounting flush with both surfaces of walls.

F. Extend sleeves installed in floors 2 inches above finished floor level.

G. Size pipe sleeves to provide 1/4-inch annular clear space between sleeve and raceway or cable, unless indicated otherwise.

H. Seal space outside of sleeves with grout for penetrations of concrete and masonry

1. Promptly pack grout solidly between sleeve and wall so no voids remain. Tool exposed surfaces smooth; protect grout while curing.

I. Interior Penetrations of Non-Fire-Rated Walls and Floors: Seal annular space between sleeve and raceway or cable, using joint sealant appropriate for size, depth, and location of joint.

J. Fire-Rated-Assembly Penetrations: Maintain indicated fire rating of walls, partitions, ceilings, and floors at raceway and cable penetrations. Install sleeves and seal raceway and cable penetration sleeves with firestop materials. Comply with requirements in Division 07.

K. Roof-Penetration Sleeves: Seal penetration of individual raceways and cables with flexible boot-type flashing units applied in coordination with roofing work.

L. Aboveground, Exterior-Wall Penetrations: Seal penetrations using steel pipe sleeves and mechanical sleeve seals. Select sleeve size to allow for 1-inch annular clear space between pipe and sleeve for installing mechanical sleeve seals.

M. Underground, Exterior-Wall Penetrations: Install cast-iron pipe sleeves. Size sleeves to allow for 1-inch annular clear space between raceway or cable and sleeve for installing mechanical sleeve seals.

3.3 SLEEVE-SEAL INSTALLATION

A. Install to seal exterior wall penetrations.

B. Use type and number of sealing elements recommended by manufacturer for raceway or cable material and size. Position raceway or cable in center of sleeve. Assemble mechanical sleeve seals and install in annular space between raceway or cable and sleeve. Tighten bolts against pressure plates that cause sealing elements to expand and make watertight seal.

3.4 FIRESTOPPING

A. Apply firestopping to penetrations of fire-rated floor and wall assemblies for electrical installations to restore original fire-resistance rating of assembly. Firestopping materials and installation requirements are specified in Division 07.

END OF SECTION 260500

SECTION 260519 - LOW-VOLTAGE ELECTRICAL POWER CONDUCTORS AND CABLES

PART 1 - GENERAL

1.1 SUMMARY

A. Section Includes:

1. Copper building wire.
2. Metal-clad cable, Type MC.
3. Fire-alarm wire and cable.
4. Connectors and splices.

1.2 ACTION SUBMITTALS

A. Product Data:

1. Copper building wire.
2. Metal-clad cable, Type MC.
3. Fire-alarm wire and cable.
4. Connectors and splices.

1.3 INFORMATIONAL SUBMITTALS

PART 2 - PRODUCTS

2.1 COPPER BUILDING WIRE

A. Manufacturers: Subject to compliance with requirements, provide products by one of the following:

1. Alpha Wire; brand of Belden, Inc.
2. Belden Inc.
3. Okonite Company (The).
4. Service Wire Co.
5. Southwire Company, LLC.
6. WESCO.

B. Description: Flexible, insulated and uninsulated, drawn copper current-carrying conductor with an overall insulation layer or jacket, or both, rated 600 V or less.

C. Standards:

1. Listed and labeled as defined in NFPA 70, by a qualified testing agency, and marked for intended location and use.
2. Conductor and Cable Marking: Comply with wire and cable marking according to UL's "Wire and Cable Marking and Application Guide."

D. Conductors: Copper, complying with ASTM B3 for bare annealed copper and with ASTM B8 for stranded conductors.

E. Conductor Insulation:

1. Type THHN and Type THWN-2. Comply with UL 83.
2. Type XHHW-2. Comply with UL 44.

2.2 METAL-CLAD CABLE, TYPE MC

A. Manufacturers: Subject to compliance with requirements, provide products by one of the following:

1. AFC Cable Systems; Atkore International.
2. Alpha Wire; brand of Belden, Inc.
3. Belden Inc.
4. General Cable; Prysmian Group North America.
5. Okonite Company (The).
6. Southwire Company, LLC.
7. WESCO.

B. Description: A factory assembly of one or more current-carrying insulated conductors in an overall metallic sheath.

C. Standards:

1. Listed and labeled as defined in NFPA 70, by a qualified testing agency, and marked for intended location and use.
2. Comply with UL 1569.
3. Conductor and Cable Marking: Comply with wire and cable marking according to UL's "Wire and Cable Marking and Application Guide."

D. Circuits:

1. Single circuit and multicircuit with color-coded conductors.
2. Power-Limited Fire-Alarm Circuits: Comply with UL 1424.

E. Conductors: Copper, complying with ASTM B3 for bare annealed copper and with ASTM B8 for stranded conductors .

F. Ground Conductor: Insulated .

G. Conductor Insulation:

1. Type TFN/THHN/THWN-2. Comply with UL 83.

H. Armor: Aluminum, interlocked.

I. Jacket: PVC applied over armor.

2.3 FIRE-ALARM WIRE AND CABLE

A. Manufacturers: Subject to compliance with requirements, provide products by one of the following:

1. Allied Wire & Cable Inc.
2. Cerro Wire LLC.
3. CommScope, Inc.
4. PYROTENAX; brand of nVent Electrical plc.
5. Rockbestos-Suprenant Cable Corp.
6. Superior Essex Inc.; subsidiary of LS Corp.
7. West Penn Wire; brand of Belden, Inc.

B. General Wire and Cable Requirements: NRTL listed and labeled as complying with NFPA 70, Article 760.

C. Signaling Line Circuits: Twisted, shielded pair, not less than No. 18 AWG .

1. Circuit Integrity Cable: Twisted shielded pair, NFPA 70, Article 760, Classification CI, for power-limited fire-alarm signal service Type FPL. NRTL listed and labeled as complying with UL 1424 and UL 2196 for a two-hour rating.

D. Non-Power-Limited Circuits: Solid-copper conductors with 600 V rated, 75 deg C, color-coded insulation, and complying with requirements in UL 2196 for a two-hour rating.

1. Low-Voltage Circuits: No. 16 AWG, minimum, in pathway.
2. Line-Voltage Circuits: No. 12 AWG, minimum, in pathway.
3. Multiconductor Armored Cable: NFPA 70, Type MC, copper conductors, Type TFN/THHN conductor insulation, copper drain wire, copper armor with outer jacket with red identifier stripe, NTRL listed for fire-alarm and cable tray installation, plenum rated.

2.4 CONNECTORS AND SPLICES

A. Manufacturers: Subject to compliance with requirements, provide products by one of the following:

1. 3M Electrical Products.
2. ABB, Electrification Business.
3. AFC Cable Systems; Atkore International.
4. Hubbell Utility Solutions; Hubbell Incorporated.
5. Ideal Industries, Inc.
6. ILSCO; brand of ECM Industries LLC; division of nVent Electric plc.
7. Service Wire Co.
8. TE Connectivity Ltd.

B. Description: Factory-fabricated connectors, splices, and lugs of size, ampacity rating, material, type, and class for application and service indicated; listed and labeled as defined in NFPA 70, by a qualified testing agency, and marked for intended location and use.

C. Jacketed Cable Connectors: For steel and aluminum jacketed cables, zinc die-cast with set screws, designed to connect conductors specified in this Section.

D. Lugs: One piece, seamless, designed to terminate conductors specified in this Section.

1. Material: Copper .
2. Type: Two hole with long barrels.
3. Termination: Compression .

PART 3 - EXECUTION

3.1 CONDUCTOR MATERIAL APPLICATIONS

A. Feeders:

1. Copper; solid for No. 10 AWG and smaller; stranded for No. 8 AWG and larger.

B. Branch Circuits:

1. Copper:
   a. Solid for No. 12 AWG and smaller; stranded for No. 10 AWG and larger.

C. Power-Limited Fire Alarm and Control: Solid for No. 12 AWG and smaller.

3.2 CONDUCTOR INSULATION AND MULTICONDUCTOR CABLE APPLICATIONS AND WIRING METHODS

A. Exposed Feeders: Type THHN/THWN-2, single conductors in raceway .

B. Feeders Concealed in Ceilings, Walls, Partitions, and Crawlspaces: Type THHN/THWN-2, single conductors in raceway .

C. Exposed Branch Circuits, Including in Crawlspaces: Type THHN/THWN-2, single conductors in raceway .

D. Branch Circuits Concealed in Ceilings, Walls, and Partitions: Type THHN/THWN-2, single conductors in raceway Metal-clad cable, Type MC .

1. MC cabe maybe used for concealed branch circuits rated not more than 30A in ampacity.

E. Branch Circuits Concealed in Concrete, below Slabs-on-Grade, and Underground: Type XHHW-2, single conductors in raceway .

3.3 INSTALLATION, GENERAL

A. Conceal cables in finished walls, ceilings, and floors unless otherwise indicated.

B. Complete raceway installation between conductor and cable termination points in accordance with Section 260533.13 "Conduits for Electrical Systems" prior to pulling conductors and cables.

C. Use manufacturer-approved pulling compound or lubricant where necessary; compound used must not deteriorate conductor or insulation. Do not exceed manufacturer's recommended maximum pulling tensions and sidewall pressure values.

D. Use pulling means, including fish tape, cable, rope, and basket-weave wire/cable grips, that will not damage cables or raceway.

E. Install exposed cables parallel and perpendicular to surfaces of exposed structural members, and follow surface contours where possible.

F. Support cables according to Section 260529 "Hangers and Supports for Electrical Systems."

3.4 INSTALLATION OF FIRE-ALARM WIRE AND CABLE

A. Comply with NFPA 72.

B. Wiring Method: Install wiring in metal pathway according to Section 270528.29 "Hangers and Supports for Communications Systems."

1. Install plenum cable in environmental airspaces, including plenum ceilings.
2. Fire-alarm circuits and equipment control wiring associated with fire-alarm system must be installed in a dedicated pathway system.
   a. Cables and pathways used for fire-alarm circuits, and equipment control wiring associated with fire-alarm system, may not contain any other wire or cable.

C. Wiring within Enclosures: Separate power-limited and non-power-limited conductors as recommended by manufacturer. Install conductors parallel with or at right angles to sides and back of the enclosure. Bundle, lace, and train conductors to terminal points with no excess. Connect conductors that are terminated, spliced, or interrupted in any enclosure associated with fire-alarm system to terminal blocks. Mark each terminal according to system's wiring diagrams. Make all connections with approved crimp-on terminal spade lugs, pressure-type terminal blocks, or plug connectors.

D. Cable Taps: Use numbered terminal strips in junction, pull, and outlet boxes; cabinets; or equipment enclosures where circuit connections are made.

E. Color-Coding: Color-code fire-alarm conductors differently from the normal building power wiring. Use one color-code for alarm circuit wiring and another for supervisory circuits. Color-code audible alarm-indicating circuits differently from alarm-initiating circuits. Use different colors for visible alarm-indicating devices. Paint fire-alarm system junction boxes and covers red.

F. Risers: Install at least two vertical cable risers to serve the fire-alarm system. Separate risers in close proximity to each other with a minimum one-hour-rated wall, so the loss of one riser does not prevent receipt or transmission of signals from other floors or zones.

G. Wiring to Remote Alarm Transmitting Device: 1 inch conduit between the fire-alarm control panel and the transmitter. Install number of conductors and electrical supervision for connecting wiring as needed to suit monitoring function.

3.5 CONNECTIONS

A. Tighten electrical connectors and terminals according to manufacturer's published torque-tightening values. If manufacturer's torque values are not indicated, use those specified in UL 486A-486B.

B. Make splices, terminations, and taps that are compatible with conductor material and that possess equivalent or better mechanical strength and insulation ratings than unspliced conductors.

C. Wiring at Outlets: Install conductor at each outlet, with at least 12 inch of slack.

D. Comply with requirements in Section 284621.11 "Addressable Fire-Alarm Systems" for connecting, terminating, and identifying wires and cables.

3.6 IDENTIFICATION

A. Identify and color-code conductors and cables according to Section 260553 "Identification for Electrical Systems."

B. Identify each spare conductor at each end with identity number and location of other end of conductor, and identify as spare conductor.

3.7 SLEEVE AND SLEEVE-SEAL INSTALLATION FOR ELECTRICAL PENETRATIONS

A. Install sleeves and sleeve seals at penetrations of exterior floor and wall assemblies. Comply with requirements in Section 260544 "Sleeves and Sleeve Seals for Electrical Raceways and Cabling."

3.8 FIRESTOPPING

A. Apply firestopping to electrical penetrations of fire-rated floor and wall assemblies to restore original fire-resistance rating of assembly according to Section 078413 "Penetration Firestopping."

END OF SECTION 260519

SECTION 260523 - CONTROL-VOLTAGE ELECTRICAL POWER CABLES

PART 1 - GENERAL

1.1 SUMMARY

A. Section Includes:

1. Category 5e balanced twisted pair cable.
2. Balanced twisted pair cable hardware.
3. Control cable.
4. Control-circuit conductors.
5. Fire-alarm wire and cable.

1.2 ACTION SUBMITTALS

A. Product Data: For each type of product.

1.3 INFORMATIONAL SUBMITTALS

PART 2 - PRODUCTS

2.1 PERFORMANCE REQUIREMENTS

A. Electrical Components, Devices, and Accessories: Listed and labeled as defined in NFPA 70, by a qualified testing agency, and marked for intended location and application.

2.2 CATEGORY 5e BALANCED TWISTED PAIR CABLE

A. Description: Four-pair, balanced-twisted pair cable, certified to meet transmission characteristics of Category 5e cable at frequencies up to 100 MHz.

B. Manufacturers: Subject to compliance with requirements, provide products by one of the following:

1. AMP NETCONNECT; a TE Connectivity Ltd. company.
2. Belden Inc.
3. CommScope, Inc.
4. Hitachi Cable America Inc.
5. Mohawk; a division of Belden Networking, Inc.
6. West Penn Wire; brand of Belden, Inc.

C. Standard: Comply with ICEA S-90-661, NEMA WC 63.1, and TIA-568-C.2 for Category 5e cables.

D. Conductors: 100 ohm, No. 24 AWG solid copper.

E. Shielding/Screening: Unshielded twisted pairs (UTP) .

F. Cable Rating: Plenum.

G. Jacket: White thermoplastic.

2.3 CONTROL CABLE

A. Plenum-Rated, Paired Cable: NFPA 70, Type CMP.

1. Multi-pair, twisted, No. 16 AWG, stranded (19x29) tinned-copper conductors.
2. PVC insulation.
3. Unshielded.
4. PVC jacket.
5. Flame Resistance: Comply with NFPA 262.

2.4 CONTROL-CIRCUIT CONDUCTORS

A. Manufacturers: Subject to compliance with requirements, provide products by one of the following:

1. Encore Wire Corporation.
2. General Cable; Prysmian Group North America.
3. Service Wire Co.
4. Southwire Company, LLC.

B. Class 1 Control Circuits: Stranded copper, Type THHN/THWN-2, complying with UL 83 in raceway.

2.5 FIRE-ALARM WIRE AND CABLE

A. Manufacturers: Subject to compliance with requirements, provide products by one of the following:

1. Allied Wire & Cable Inc.
2. CommScope, Inc.
3. Prysmian Cables and Systems; Prysmian Group North America.
4. Superior Essex Inc.; subsidiary of LS Corp.
5. West Penn Wire; brand of Belden, Inc.

B. General Wire and Cable Requirements: NRTL listed and labeled as complying with NFPA 70, Article 760.

C. Signaling Line Circuits: Twisted, shielded pair, not less than No. 18 AWG .

1. Circuit Integrity Cable: Twisted shielded pair, NFPA 70, Article 760, Classification CI, for power-limited fire-alarm signal service Type FPL. NRTL listed and labeled as complying with UL 1424 and UL 2196 for a two-hour rating.

D. Non-Power-Limited Circuits: Solid-copper conductors with 600 V rated, 75 deg C, color-coded insulation, and complying with requirements in UL 2196 for a two-hour rating.

1. Control-Voltage Circuits: No. 16 AWG, minimum, in pathway.
2. Low-Voltage Circuits: No. 12 AWG, minimum, in pathway.
3. Multiconductor Armored Cable: NFPA 70, Type MC, copper conductors, Type TFN/THHN conductor insulation, copper drain wire, copper armor with outer jacket with red identifier stripe, NTRL listed for fire-alarm and cable tray installation, plenum rated.

2.6 SOURCE QUALITY CONTROL

A. Factory test balanced twisted pair cables according to TIA-568-C.2.

B. Cable will be considered defective if it does not pass tests and inspections.

C. Prepare test and inspection reports.

PART 3 - EXECUTION

3.1 EXAMINATION

A. Test cables on receipt at Project site.

1. Test each pair of twisted pair cable for open and short circuits.

3.2 INSTALLATION OF RACEWAYS AND BOXES

A. Comply with requirements in Section 260533.13 "Conduits for Electrical Systems" for raceway selection and installation requirements for boxes, conduits, and wireways as supplemented or modified in this Section.

B. Comply with requirements in Section 260533.23 "Surface Raceways for Electrical Systems" for raceway selection and installation requirements for wireways as supplemented or modified in this Section.

C. Comply with requirements in Section 260533.16 "Boxes and Covers for Electrical Systems" for raceway selection and installation requirements for boxes as supplemented or modified in this Section.

1. Outlet boxes must be no smaller than 2 inch wide, 3 inch high, and 2-1/2 inch deep.
2. Flexible metal conduit must not be used.

D. Comply with TIA-569-D for pull-box sizing and length of conduit and number of bends between pull points.

E. Install manufactured conduit sweeps and long-radius elbows if possible.

3.3 INSTALLATION OF CONDUCTORS AND CABLES

A. Comply with NECA 1.

B. General Requirements for Cabling:

1. Comply with TIA-568-C Series of standards.
2. Comply with BICSI ITSIMM, Ch. 5, "Copper Structured Cabling Systems."
3. Terminate all conductors; cable must not contain unterminated elements. Make terminations only at indicated outlets, terminals, and cross-connect and patch panels.
4. Cables may not be spliced and must be continuous from terminal to terminal. Do not splice cable between termination, tap, or junction points.
5. Cables serving a common system may be grouped in a common raceway. Install network cabling and control wiring and cable in separate raceway from power wiring. Do not group conductors from different systems or different voltages.
6. Secure and support cables at intervals not exceeding 30 inch and not more than 6 inch from cabinets, boxes, fittings, outlets, racks, frames, and terminals.
7. Bundle, lace, and train conductors to terminal points without exceeding manufacturer's limitations on bending radii, but not less than radii specified in BICSI ITSIMM, Ch. 5, "Copper Structured Cabling Systems." Install lacing bars and distribution spools.
8. Do not install bruised, kinked, scored, deformed, or abraded cable. Remove and discard cable if damaged during installation and replace it with new cable.
9. Cold-Weather Installation: Bring cable to room temperature before dereeling. Do not use heat lamps for heating.
10. Pulling Cable: Comply with BICSI ITSIMM, Ch. 5, "Copper Structured Cabling Systems." Monitor cable pull tensions.
11. Support: Do not allow cables to lay on removable ceiling tiles.
12. Secure: Fasten securely in place with hardware specifically designed and installed so as to not damage cables.
13. Provide strain relief.
14. Keep runs short. Allow extra length for connecting to terminals. Do not bend cables in a radius less than 10 times the cable OD. Use sleeves or grommets to protect cables from vibration at points where they pass around sharp corners and through penetrations.
15. Ground wire must be copper, and grounding methods must comply with IEEE C2. Demonstrate ground resistance.

C. Balanced Twisted Pair Cable Installation:

1. Comply with TIA-568-C.2.
2. Install termination hardware as specified in Section 271513 "Communications Copper Horizontal Cabling" unless otherwise indicated.
3. Do not untwist UTP cables more than 1/2 inch at the point of termination to maintain cable geometry.

D. Installation of Control-Circuit Conductors:

1. Install wiring in raceways.

E. Open-Cable Installation:

1. Install cabling with horizontal and vertical cable guides in telecommunications spaces with terminating hardware and interconnection equipment.
2. Suspend copper cable not in a wireway or pathway a minimum of 8 inch above ceilings by cable supports not more than 30 inch apart.

3. Cable must not be run through or on structural members or in contact with pipes, ducts, or other potentially damaging items. Do not run cables between structural members and corrugated panels.

3.4 REMOVAL OF CONDUCTORS AND CABLES

A. Remove abandoned conductors and cables. Abandoned conductors and cables are those installed that are not terminated at equipment and are not identified with a tag for future use.

3.5 CONTROL-CIRCUIT CONDUCTORS

A. Minimum Conductor Sizes:

1. Class 1 remote-control and signal circuits; No 14 AWG .

3.6 FIRESTOPPING

A. Comply with requirements in Section 078413 "Penetration Firestopping."

B. Comply with TIA-569-D, Annex A, "Firestopping."

C. Comply with BICSI TDMM, "Firestopping" Chapter.

3.7 GROUNDING

A. For control-voltage wiring and cabling, comply with requirements in Section 260526 "Grounding and Bonding for Electrical Systems."

3.8 IDENTIFICATION

A. Comply with requirements for identification specified in Section 260553 "Identification for Electrical Systems."

B. Identify data and communications system components, wiring, and cabling according to TIA-606-B; label printers must use label stocks, laminating adhesives, and inks complying with UL 969.

C. Identify each wire on each end and at each terminal with a number-coded identification tag. Each wire must have a unique tag.

END OF SECTION 260523

SECTION 260526 - GROUNDING AND BONDING FOR ELECTRICAL SYSTEMS

PART 1 - GENERAL

1.1 SUMMARY

A. Section Includes:

1. Grounding and bonding conductors.
2. Grounding and bonding clamps.
3. Grounding and bonding hubs.
4. Grounding and bonding connectors.
5. Grounding and bonding busbars.
6. Grounding (earthing) electrodes.

1.2 DEFINITIONS

A. BBC: Backbone bonding conductor, for connecting multiple TBBs serving the same floor.

B. PBB: Primary bonding busbar, located in main distribution frame room, ideally near electrical service entrance.

C. RBB: Rack bonding busbar, located in equipment cabinets and racks.

D. SBB: Secondary bonding busbar, located in intermediate distribution frame rooms.

E. TBB: Telecommunications bonding backbone, for connecting SBBs to PBB.

F. TBC: Telecommunications bonding conductor, for connecting PBB to intersystem bonding termination device or busbar at electrical service entrance.

G. TEBC: Telecommunications equipment bonding conductor, for connecting RBBs to SBBs or PBB.

H. UBC: Unit bonding conductor, for connecting individual communications equipment to RBBs or SBBs.

1.3 ACTION SUBMITTALS

A. Product Data:

1. Grounding and bonding conductors.
2. Grounding and bonding clamps.
3. Grounding and bonding bushings.
4. Grounding and bonding hubs.
5. Grounding and bonding connectors.
6. Grounding and bonding busbars.
7. Grounding (earthing) electrodes.

1.4 CLOSEOUT SUBMITTALS

PART 2 - PRODUCTS

2.1 GROUNDING AND BONDING CONDUCTORS

A. Equipment Grounding Conductor:

1. General Characteristics: 600 V, THHN/THWN-2 or THWN-2 , copper wire or cable, green color, in accordance with Section 260519 "Low-Voltage Electrical Power Conductors and Cables."

B. ASTM - Bare Copper Grounding and Bonding Conductor:

1. Manufacturers: Subject to compliance with requirements, available manufacturers offering products that may be incorporated into the Work include, but are not limited to, the following:
   a. ERICO; brand of nVent Electrical plc.
   b. Harger Lightning & Grounding; business of Harger, Inc.
2. Referenced Standards: Complying with one or more of the following:
   a. Soft or Annealed Copper Wire: ASTM B3.
   b. Concentric-Lay Stranded Copper Conductor: ASTM B8.
   c. Tin-Coated Soft or Annealed Copper Wire: ASTM B33.
   d. 19-Wire Combination Unilay-Stranded Copper Conductor: ASTM B787/B787M.

2.2 GROUNDING AND BONDING CLAMPS

A. Description: Clamps suitable for attachment of grounding and bonding conductors to grounding electrodes, pipes, tubing, and rebar. Grounding and bonding clamps specified in this article are also suitable for use with communications applications.

B. Performance Criteria:

1. Regulatory Requirements:
   a. Listed and labeled in accordance with NFPA 70, by qualified electrical testing laboratory recognized by authorities having jurisdiction, and marked for intended location and application.
2. Listing Criteria:
   a. Grounding and Bonding Equipment: UL CCN KDER; including UL 467.
   b. Grounding and Bonding Equipment for Communications: UL CCN KDSH; including UL 467.

2.3 GROUNDING AND BONDING HUBS

A. Description: Hubs with certified grounding or bonding locknut.

B. Performance Criteria:

1. Regulatory Requirements:

a. Listed and labeled in accordance with NFPA 70, by qualified electrical testing laboratory recognized by authorities having jurisdiction, and marked for intended location and application.

2. Listing Criteria:

a. Grounding and Bonding Equipment: UL CCN KDER; including UL 467.

2.4 GROUNDING AND BONDING CONNECTORS

A. Performance Criteria:

1. Regulatory Requirements:

a. Listed and labeled in accordance with NFPA 70, by qualified electrical testing laboratory recognized by authorities having jurisdiction, and marked for intended location and application.

2. Listing Criteria:

a. Grounding and Bonding Equipment: UL CCN KDER; including UL 467.

b. Grounding and Bonding Equipment for Communications: UL CCN KDSH; including UL 467.

2.5 GROUNDING AND BONDING BUSBARS

A. Description: Miscellaneous grounding and bonding device that serves as common connection for multiple grounding and bonding conductors.

B. Performance Criteria:

1. Regulatory Requirements:

a. Listed and labeled in accordance with NFPA 70, by qualified electrical testing laboratory recognized by authorities having jurisdiction, and marked for intended location and application.

2. Listing Criteria:

a. Grounding and Bonding Equipment: UL CCN KDER; including UL 467.

2.6 GROUNDING (EARTHING) ELECTRODES

A. Description: Grounding electrodes include rod electrodes, ring electrodes, metal underground water pipes, metal building frames, concrete-encased electrodes, and pipe and plate electrodes.

B. Performance Criteria:

1. Regulatory Requirements:

a. Listed and labeled in accordance with NFPA 70, by qualified electrical testing laboratory recognized by authorities having jurisdiction, and marked for intended location and application.

2. Listing Criteria:

a. Grounding and Bonding Equipment: UL CCN KDER; including UL 467.

C. UL KDER - Rod Electrode :

1. Manufacturers: Subject to compliance with requirements, provide products by one of the following:
   a. ABB, Electrification Business.
   b. Continental Industries; brand of Hubbell Utility Solutions; Hubbell Incorporated.
   c. ERICO; brand of nVent Electrical plc.
   d. Galvan Industries, Inc.; Electrical Products Division, LLC.
   e. Harger Lightning & Grounding; business of Harger, Inc.
2. General Characteristics: Copper-clad steel ; 3/4 inch by 10 ft .

PART 3 - EXECUTION

3.1 SELECTION OF GROUNDING AND BONDING PRODUCTS FOR ELECTRICAL POWER

A. Grounding and Bonding Conductors:

1. Provide solid conductor for 8 AWG and smaller, and stranded conductors for 6 AWG and larger unless otherwise indicated.
2. Custom-Length Insulated Equipment Bonding Jumpers: 6 AWG, 19-strand, Type THHN.
3. Bonding Cable: 28 kcmil, 14 strands of 17 AWG conductor, 1/4 inch in diameter.
4. Bonding Conductor: 4 AWG or 6 AWG, stranded conductor.
5. Bonding Jumper: Copper tape, braided conductors terminated with copper ferrules; 1-5/8 inch wide and 1/16 inch thick.

B. Tinned Bonding Jumper: Tinned-copper tape, braided conductors terminated with copper ferrules; 1-5/8 inch wide and 1/16 inch thick.

1. Underground Grounding Conductors: Install bare tinned-copper conductor, 2/0 AWG minimum.

C. Grounding and Bonding Connectors:

1. Pipe and Equipment Grounding Conductor Terminations: Bolted connectors.
2. Underground Connections: Welded connectors except at test wells and as otherwise indicated.
3. Connections to Structural Steel: Welded connectors.

D. Grounding and Bonding Busbars: Provide in electrical equipment rooms, in rooms housing service equipment, and elsewhere as indicated.

3.2 INSTALLATION OF GROUNDING AND BONDING FOR ELECTRICAL POWER

A. Comply with manufacturer's published instructions.

B. Special Techniques:

1. Grounding and Bonding Conductors:
   a. Route along shortest and straightest paths possible unless otherwise indicated or required by Code. Avoid obstructing access or placing conductors where they may be subjected to strain, impact, or damage.
   b. Underground Grounding Conductors:

1) Bury at least 30 inch below grade.

2. Grounding and Bonding Connectors: Make connections so possibility of galvanic action or electrolysis is minimized. Select connectors, connection hardware, conductors, and connection methods so metals in direct contact are galvanically compatible.
   a. Use electroplated or hot-tin-coated materials to ensure high conductivity and to make contact points closer in order of galvanic series.
   b. Make connections with clean, bare metal at points of contact.
   c. Make aluminum-to-steel connections with stainless steel separators and mechanical clamps.
   d. Make aluminum-to-galvanized-steel connections with tin-plated copper jumpers and mechanical clamps.
   e. Coat and seal connections having dissimilar metals with inert material to prevent future penetration of moisture to contact surfaces.
   f. Bonding Straps and Jumpers: Install in locations accessible for inspection and maintenance except where routed through short lengths of conduit.
      1) Bonding to Structure: Bond straps directly to basic structure, taking care not to penetrate adjacent parts.
      2) Use exothermic-welded connectors for outdoor locations; if disconnect-type connection is required, use bolted clamp.
   g. Bonding Interior Metal Ducts: Bond metal air ducts to equipment grounding conductors of associated fans, blowers, electric heaters, and air cleaners. Install tinned bonding jumper to bond across flexible duct connections to achieve continuity.
   h. Grounding for Steel Building Structure: Install driven ground rod at base of each corner column and at intermediate exterior columns at distances not more than 60 ft apart.
3. Grounding and Bonding Busbars:
   a. Install busbar horizontally, on insulated spacers 2 inch minimum from wall, 6 inch above finished floor unless otherwise indicated.
   b. Where busbars are indicated on both sides of doorways, route bonding conductor up to top of door frame, across top of doorway, and down; connect to continuation of horizontal busbar.
4. Electrodes:
   a. Ground Rods: Drive rods until tops are 2 inch below finished floor or final grade unless otherwise indicated.
      1) Interconnect ground rods with grounding electrode conductor below grade and as otherwise indicated. Make connections without exposing steel or damaging coating if any.
      2) Use exothermic welds for below-grade connections.
   b. For grounding electrode system, install at least two rods spaced at least one-rod length from each other and located at least same distance from other grounding electrodes, and connect to service grounding electrode conductor.
5. Grounding Underground Distribution System Components:
   a. Duct-Bank Grounding Conductor: Bury 12 inch above duct bank when indicated as part of duct-bank installation.
   b. Comply with IEEE C2 grounding requirements.
6. Equipment Grounding:
   a. Install insulated equipment grounding conductors with feeders and branch circuits.
   b. Air-Duct Equipment Circuits: Install insulated equipment grounding conductor to duct-mounted electrical devices operating at 120 V and more, including air cleaners, heaters, dampers, humidifiers, and other duct electrical equipment. Bond conductor to each unit and to air duct and connected metallic piping.

3.3 PROTECTION

A. After installation, protect grounding and bonding cables and equipment from construction activities. Remove and replace items that are contaminated, defaced, damaged, or otherwise caused to be unfit for use prior to acceptance by Owner.

END OF SECTION 260526

SECTION 260529 - HANGERS AND SUPPORTS FOR ELECTRICAL SYSTEMS

PART 1 - GENERAL

1.1 SUMMARY

A. Section Includes:

1. Support, anchorage, and attachment components.
2. Fabricated metal equipment support assemblies.

1.2 ACTION SUBMITTALS

A. Product Data:

1. Include construction details, material descriptions, dimensions of individual components and profiles, and finishes for the following:
   a. Slotted support systems, hardware, and accessories.
   b. Clamps.
   c. Hangers.
   d. Sockets.
   e. Eye nuts.
   f. Fasteners.
   g. Anchors.
   h. Saddles.
   i. Brackets.
2. Include rated capacities and furnished specialties and accessories.

PART 2 - PRODUCTS

2.1 SUPPORT, ANCHORAGE, AND ATTACHMENT COMPONENTS

A. Steel Slotted Support Systems: Preformed steel channels and angles with minimum 13/32 inch diameter holes at a maximum of 8 inch on center in at least one surface.

1. Manufacturers: Subject to compliance with requirements, provide products by one of the following:
   a. ABB, Electrification Business.
   b. Allied Tube & Conduit; Atkore International.
   c. Cooper B-line; brand of Eaton, Electrical Sector.
   d. G-Strut.
   e. Gripple Inc.
2. Standard: Comply with MFMA-4 factory-fabricated components for field assembly.
3. Material for Channel, Fittings, and Accessories: Galvanized steel .
4. Channel Width: Selected for applicable load criteria .
5. Metallic Coatings: Hot-dip galvanized after fabrication and applied according to MFMA-4.

B. Conduit and Cable Support Devices: Steel hangers, clamps, and associated fittings, designed for types and sizes of raceway or cable to be supported.

2.2 FABRICATED METAL EQUIPMENT SUPPORT ASSEMBLIES

A. Description: Welded or bolted structural-steel shapes, shop or field fabricated to fit dimensions of supported equipment.

B. Materials: Comply with requirements in Section 055000 "Metal Fabrications" for steel shapes and plates.

PART 3 - EXECUTION

3.1 SELECTION

A. Comply with the following standards for selection and installation of hangers and supports, except where requirements on Drawings or in this Section are stricter:

1. NECA NEIS 1 & 101

B. Comply with requirements in Section 078413 "Penetration Firestopping" for firestopping materials and installation for penetrations through fire-rated walls, ceilings, and assemblies.

C. Comply with requirements for raceways specified in Section 260533.13 "Conduits for Electrical Systems."

D. Comply with requirements for boxes specified in Section 260533.16 "Boxes and Covers for Electrical Systems."

E. Maximum Support Spacing and Minimum Hanger Rod Size for Raceways: Space supports for EMT, IMC, and ERMC as required by NFPA 70. Minimum rod size must be 1/4 inch in diameter.

F. Multiple Raceways or Cables: Install trapeze-type supports fabricated with steel slotted or other support system, sized so capacity can be increased by at least 25 percent in future without exceeding specified design load limits.

1. Secure raceways and cables to these supports with two-bolt conduit clamps .

3.2 INSTALLATION OF SUPPORTS

A. Comply with NECA NEIS 1 & 101 for installation requirements except as specified in this article.

B. Raceway Support Methods: In addition to methods described in NECA NEIS 1, EMT IMC and ERMC may be supported by openings through structure members, in accordance with NFPA 70.

C. Strength of Support Assemblies: Where not indicated, select sizes of components so strength will be adequate to carry present and future static loads within specified loading limits. Minimum

static design load used for strength determination must be weight of supported components plus 200 lb.

D. Drill holes for expansion anchors in concrete at locations and to depths that avoid the need for reinforcing bars.

3.3 INSTALLATION OF FABRICATED METAL SUPPORTS

A. Comply with installation requirements in Section 055000 "Metal Fabrications" for site-fabricated metal supports.

B. Cut, fit, and place miscellaneous metal supports accurately in location, alignment, and elevation to support and anchor electrical materials and equipment.

C. Field Welding: Comply with AWS D1.1/D1.1M. Submit welding certificates.

END OF SECTION 260529

SECTION 260533.13 - CONDUITS FOR ELECTRICAL SYSTEMS

PART 1 - GENERAL

1.1 SUMMARY

A. Section Includes:

1. Type EMT-S duct raceways and elbows.
2. Type ERMC-S duct raceways, elbows, couplings, and nipples.
3. Type FMC-S and Type FMC-A duct raceways.
4. Type IMC duct raceways.
5. Type LFMC duct raceways.
6. Type LFNC duct raceways.
7. Type PVC duct raceways and fittings.
8. Fittings for conduit, tubing, and cable.
9. Electrically conductive corrosion-resistant compounds for threaded conduit.
10. Solvent cements.

B. Products Installed, but Not Furnished, under This Section:

1. See Section 260553 "Identification for Electrical Systems" for electrical equipment labels.

C. Related Requirements:

1. Section 260519 "Low-Voltage for Electrical Power Conductors and Cables" for nonmetallic underground conduit with conductors (Type NUCC).
2. Section 260543 "Underground Ducts and Raceways for Electrical Systems" for exterior duct banks, manholes, and underground utility construction.

1.2 DEFINITIONS

A. Conduit: A structure containing one or more duct raceways.

B. Duct Raceway: A single enclosed raceway for conductors or cable.

1.3 ACTION SUBMITTALS

A. Product Data:

1. Type EMT-S duct raceways and elbows.
2. Type ERMC-S duct raceways, elbows, couplings, and nipples.
3. Type FMC-S and Type FMC-A duct raceways.
4. Type IMC duct raceways.
5. Type LFMC duct raceways.
6. Type LFNC duct raceways.
7. Type PVC duct raceways and fittings.
8. Fittings for conduit, tubing, and cable.
9. Electrically conductive corrosion-resistant compounds for threaded conduit.

10. Solvent cements.

1.4 INFORMATIONAL SUBMITTALS

PART 2 - PRODUCTS

2.1 TYPE EMT-S DUCT RACEWAYS AND ELBOWS

A. Performance Criteria:

1. Regulatory Requirements: Listed and labeled in accordance with NFPA 70, by qualified electrical testing laboratory recognized by authorities having jurisdiction, and marked for intended location and application.
2. Listing Criteria: UL CCN FJMX; including UL 797.

B. Source Quality Control:

1. Product Data: Prepare and submit catalog cuts, brochures, and performance data illustrating size, physical appearance, and other characteristics of product.
2. Manufacturer's Published Instructions: Prepare and submit installation, testing, and operating instructions for product.

C. UL FJMX - Steel Electrical Metal Tubing (EMT-S) and Elbows:

1. Manufacturers: Subject to compliance with requirements, provide products by the following:
   a. Calconduit; Atkore International.
   b. Emerson Electric Co., Automation Solutions.
   c. Topaz Lighting & Electric.
   d. Wheatland Tube; Zekelman Industries.
2. Material: Steel.
3. Options:
   a. Exterior Coating: Zinc .
   b. Interior Coating: Zinc with organic top coating .
   c. Minimum Trade Size: Metric designator 21 (trade size 3/4).

2.2 TYPE ERMC-S DUCT RACEWAYS, ELBOWS, COUPLINGS, AND NIPPLES

A. Performance Criteria:

1. Regulatory Requirements: Listed and labeled in accordance with NFPA 70, by qualified electrical testing laboratory recognized by authorities having jurisdiction, and marked for intended location and application.
2. Listing Criteria: UL CCN DYIX; including UL 6.

B. Source Quality Control:

1. Product Data: Prepare and submit catalog cuts, brochures, and performance data illustrating size, physical appearance, and other characteristics of product.

2. Manufacturer's Published Instructions: Prepare and submit installation, testing, and operating instructions for product.

C. UL DYIX - Galvanized-Steel Electrical Rigid Metal Conduit (ERMC-S-G), Elbows, Couplings, and Nipples:

1. Manufacturers: Subject to compliance with requirements, provide products by one of the following:
   a. Allied Tube & Conduit; Atkore International.
   b. Calconduit; Atkore International.
   c. Crouse-Hinds; brand of Eaton, Electrical Sector.
   d. Killark; brand of Hubbell Electrical Solutions; Hubbell Incorporated.
   e. Topaz Lighting & Electric.
   f. Wheatland Tube; Zekelman Industries.
2. Exterior Coating: Zinc.
3. Options:
   a. Interior Coating: Zinc with organic top coating .
   b. Minimum Trade Size: Metric designator 21 (trade size 3/4).

2.3 TYPE FMC-A DUCT RACEWAYS

A. Performance Criteria:

1. Regulatory Requirements: Listed and labeled in accordance with NFPA 70, by qualified electrical testing laboratory recognized by authorities having jurisdiction, and marked for intended location and application.
2. Listing Criteria: UL CCN DXUZ; including UL 1.

B. Source Quality Control:

1. Product Data: Prepare and submit catalog cuts, brochures, and performance data illustrating size, physical appearance, and other characteristics of product.
2. Manufacturer's Published Instructions: Prepare and submit installation, testing, and operating instructions for product.

C. UL DXUZ - Aluminum Flexible Metal Conduit (FMC-A):

1. Manufacturers: Subject to compliance with requirements, provide products by one of the following:
   a. ABB, Electrification Business.
   b. Electri-Flex Company.
   c. Topaz Lighting & Electric.
2. Options:
   a. Minimum Trade Size: Metric designator 21 (trade size 3/4).

2.4 TYPE IMC DUCT RACEWAYS

A. Performance Criteria:

1. Regulatory Requirements: Listed and labeled in accordance with NFPA 70, by qualified electrical testing laboratory recognized by authorities having jurisdiction, and marked for intended location and application.
2. Listing Criteria: UL CCN DYBY; including UL 1242.

B. Source Quality Control:

1. Product Data: Prepare and submit catalog cuts, brochures, and performance data illustrating size, physical appearance, and other characteristics of product.
2. Manufacturer's Published Instructions: Prepare and submit installation, testing, and operating instructions for product.

C. UL DYBY - Steel Intermediate Metal Conduit (IMC):

1. Manufacturers: Subject to compliance with requirements, provide products by one of the following:
   a. ABB, Electrification Business.
   b. Allied Tube & Conduit; Atkore International.
   c. Calconduit; Atkore International.
   d. Topaz Lighting & Electric.
   e. Wheatland Tube; Zekelman Industries.
2. Options:
   a. Exterior Coating: Zinc .
   b. Interior Coating: Zinc with organic top coating .
   c. Minimum Trade Size: Metric designator 21 (trade size 3/4).

2.5 TYPE LFMC DUCT RACEWAYS

A. Performance Criteria:

1. Regulatory Requirements: Listed and labeled in accordance with NFPA 70, by qualified electrical testing laboratory recognized by authorities having jurisdiction, and marked for intended location and application.
2. Listing Criteria: UL CCN DXHR; including UL 360.

B. Source Quality Control:

1. Product Data: Prepare and submit catalog cuts, brochures, and performance data illustrating size, physical appearance, and other characteristics of product.
2. Manufacturer's Published Instructions: Prepare and submit installation, testing, and operating instructions for product.

C. UL DXHR - Steel Liquidtight Flexible Metal Conduit (LFMC-S):

1. Manufacturers: Subject to compliance with requirements, provide products by one of the following:
   a. ABB, Electrification Business.
   b. Anaconda Sealtite; Anamet Electrical, Inc.
   c. Electri-Flex Company.
   d. International Metal Hose Co.
2. Material: Steel.
3. Options:

a. Minimum Trade Size: Metric designator 21 (trade size 3/4).

2.6 TYPE LFNC DUCT RACEWAYS

A. Performance Criteria:

1. Regulatory Requirements: Listed and labeled in accordance with NFPA 70, by qualified electrical testing laboratory recognized by authorities having jurisdiction, and marked for intended location and application.
2. Listing Criteria: UL CCN DXOQ; including UL 1660.

B. Source Quality Control:

1. Product Data: Prepare and submit catalog cuts, brochures, and performance data illustrating size, physical appearance, and other characteristics of product.
2. Manufacturer's Published Instructions: Prepare and submit installation, testing, and operating instructions for product.

C. UL DXOQ - Layered (Type A) Liquidtight Flexible Nonmetallic Conduit (LFNC-A):

1. Manufacturers: Subject to compliance with requirements, provide products by one of the following:
   a. AFC Cable Systems; Atkore International.
   b. Electri-Flex Company.
   c. Topaz Lighting & Electric.
2. Additional Criteria: Type A conduit with smooth seamless inner core and cover bonded together with one or more reinforcement layers between core and cover.
3. Options:
   a. Minimum Trade Size: Metric designator 21 (trade size 3/4).

2.7 TYPE PVC DUCT RACEWAYS AND FITTINGS

A. Performance Criteria:

1. Regulatory Requirements: Listed and labeled in accordance with NFPA 70, by qualified electrical testing laboratory recognized by authorities having jurisdiction, and marked for intended location and application.
2. Listing Criteria: UL CCN DZYR; including UL 651.

B. Source Quality Control:

1. Product Data: Prepare and submit catalog cuts, brochures, and performance data illustrating size, physical appearance, and other characteristics of product.
2. Manufacturer's Published Instructions: Prepare and submit installation, testing, and operating instructions for product.

C. UL DZYR - Schedule 40 Rigid PVC Conduit (PVC-40) and Fittings:

1. Manufacturers: Subject to compliance with requirements, provide products by the following:
   a. ABB, Electrification Business.

b. Calconduit; Atkore International.
c. NAPCO; Westlake Chemical Corp.
d. Topaz Lighting & Electric.

2. Dimensional Specifications: Schedule 40.
3. Options:
   a. Minimum Trade Size: Metric designator 21 (trade size 3/4).
   b. Markings: For use with maximum 90 deg C wire .

2.8 FITTINGS FOR CONDUIT, TUBING, AND CABLE

A. Performance Criteria:

1. Regulatory Requirements: Listed and labeled in accordance with NFPA 70, by qualified electrical testing laboratory recognized by authorities having jurisdiction, and marked for intended location and application.

B. Source Quality Control:

1. Product Data: Prepare and submit catalog cuts, brochures, and performance data illustrating size, physical appearance, and other characteristics of product.
2. Manufacturer's Published Instructions: Prepare and submit installation, testing, and operating instructions for product.

C. UL DWTT - Fittings for Type ERMC, Type IMC, and Type PVC Duct Raceways:

1. Manufacturers: Subject to compliance with requirements, provide products by one of the following:
   a. ABB, Electrification Business.
   b. Appleton; Emerson Electric Co., Automation Solutions.
   c. Crouse-Hinds; brand of Eaton, Electrical Sector.
   d. Konkore Fittings; Atkore International.
   e. O-Z/Gedney; brand of Emerson Electric Co., Automation Solutions, Appleton Group.
   f. Southwire Company, LLC.
   g. Topaz Lighting & Electric.
2. Listing Criteria: UL CCN DWTT; including UL 514B.
3. Options:
   a. Material: Steel .
   b. Coupling Method: Compression coupling .
   c. Expansion and Deflection Fittings: UL 651 with flexible bonding jumper.

D. UL FKAV - Fittings for Type EMT Duct Raceways:

1. Manufacturers: Subject to compliance with requirements, provide products by one of the following:
   a. ABB, Electrification Business.
   b. Calconduit; Atkore International.
   c. O-Z/Gedney; brand of Emerson Electric Co., Automation Solutions, Appleton Group.
   d. Southwire Company, LLC.
   e. Topaz Lighting & Electric.
2. Listing Criteria: UL CCN FKAV; including UL 514B.

3. Options:
   a. Material: Steel .
   b. Coupling Method: Compression coupling .
   c. Expansion and Deflection Fittings: UL 651 with flexible bonding jumper.

E. UL ILNR - Fittings for Type FMC Duct Raceways:

1. Manufacturers: Subject to compliance with requirements, provide products by one of the following:
   a. American Fittings Corp. (AMFICO).
   b. Liquid Tight Connector Co.
   c. Southwire Company, LLC.
2. Listing Criteria: UL CCN ILNR; including UL 514B.

F. UL DXAS - Fittings for Type LFMC and Type LFNC Duct Raceways:

1. Manufacturers: Subject to compliance with requirements, provide products by one of the following:
   a. Arlington Industries, Inc.
   b. Liquid Tight Connector Co.
2. Listing Criteria: UL CCN DXAS; including UL 514B.

2.9 ELECTRICALLY CONDUCTIVE CORROSION-RESISTANT COMPOUNDS FOR THREADED CONDUIT

A. Performance Criteria:

1. Regulatory Requirements: Listed and labeled in accordance with NFPA 70, by qualified electrical testing laboratory recognized by authorities having jurisdiction, and marked for intended location and application.
2. Listing Criteria: UL CCN FOIZ; including UL Subject 2419.

B. Source Quality Control:

1. Product Data: Prepare and submit catalog cuts, brochures, and performance data illustrating size, physical appearance, and other characteristics of product.
2. Manufacturer's Published Instructions: Prepare and submit installation, testing, and operating instructions for product.

C. UL FOIZ - Electrically Conductive Corrosion-Resistant Compound for Threaded Conduit:

1. Manufacturers: Subject to compliance with requirements, available manufacturers offering products that may be incorporated into the Work include, but are not limited to, the following:
   a. ABB, Electrification Business.

2.10 SOLVENT CEMENTS

A. Performance Criteria:

1. Regulatory Requirements: Listed and labeled in accordance with NFPA 70, by qualified electrical testing laboratory recognized by authorities having jurisdiction, and marked for intended location and application.
2. Listing Criteria: UL CCN DWTT; including UL 514B.

B. Source Quality Control:

1. Product Data: Prepare and submit catalog cuts, brochures, and performance data illustrating size, physical appearance, and other characteristics of product.
2. Manufacturer's Published Instructions: Prepare and submit installation, testing, and operating instructions for product.

PART 3 - EXECUTION

3.1 SELECTION OF CONDUITS FOR ELECTRICAL SYSTEMS

A. Unless more stringent requirements are specified in Contract Documents or manufacturers' published instructions, comply with NFPA 70 for selection of duct raceways. Consult Architect for resolution of conflicting requirements.

B. Outdoors:

1. Exposed and Subject to Physical Damage: ERMC IMC .
   a. Locations less than 2.5 m (8 ft) above finished floor.
2. Exposed and Not Subject to Physical Damage: ERMC IMC .
3. Concealed Aboveground: ERMC IMC .
4. Direct Buried: PVC-40 .

C. Indoors:

1. Exposed and Subject to Severe Physical Damage: ERMC IMC. Locations include the following:
   a. Loading docks.
   b. Corridors used for traffic of mechanized carts, forklifts, and pallet-handling units.
   c. Mechanical rooms.
   d. Gymnasiums.
2. Exposed and Subject to Physical Damage: ERMC IMC . Locations include the following:
   a. Locations less than 2.5 m (8 ft) above finished floor.
   b. Stub-ups to above suspended ceilings.
3. Exposed and Not Subject to Physical Damage: EMT .
4. Concealed in Ceilings and Interior Walls and Partitions: EMT .
5. Damp or Wet Locations: ERMC IMC .
6. Connection to Vibrating Equipment (Including Transformers and Hydraulic, Pneumatic, Electric Solenoid, or Motor-Driven Equipment): LFMC FMC LFNC-A .

D. Duct Fittings: Select fittings in accordance with NEMA FB 2.10 guidelines.

1. ERMC and IMC: Provide threaded-type fittings unless otherwise indicated.

3.2 INSTALLATION OF CONDUITS FOR ELECTRICAL SYSTEMS

A. Comply with manufacturer's published instructions.

B. Reference Standards for Installation: Unless more stringent installation requirements are specified in Contract Documents or manufacturers' published instructions, comply with the following:

1. Type EMT-S: Article 358 of NFPA 70 and NECA NEIS 101.
2. Type ERMC-S: Article 344 of NFPA 70 and NECA NEIS 101.
3. Type FMC-A: Article 348 of NFPA 70 and NECA NEIS 102.
4. Type IMC: Article 342 of NFPA 70 and NECA NEIS 101.
5. Type LFMC: Article 350 of NFPA 70 and NECA NEIS 101.
6. Type LFNC: Article 342 of NFPA 70 and NECA NEIS 111.
7. Type PVC: Article 356 of NFPA 70 and NECA NEIS 111.
8. Expansion Fittings: NEMA FB 2.40.
9. Consult Architect for resolution of conflicting requirements.

C. Special Installation Techniques:

1. General Requirements for Installation of Duct Raceways:
   a. Complete duct raceway installation before starting conductor installation.
   b. Provide stub-ups through floors with coupling threaded inside for plugs, set flush with finished floor. Plug coupling until conduit is extended above floor to final destination or a minimum of 2 ft above finished floor.
   c. Install no more than equivalent of three 90-degree bends in conduit run. Support within 12 inch of changes in direction.
   d. Make bends in duct raceway using large-radius preformed ells except for parallel bends. Field bending must be in accordance with NFPA 70 minimum radii requirements. Provide only equipment specifically designed for material and size involved.
   e. Conceal conduit within finished walls, ceilings, and floors unless otherwise indicated. Install conduits parallel or perpendicular to building lines.
   f. Support conduit within 12 inch of enclosures to which attached.
   g. Install duct sealing fittings at accessible locations in accordance with NFPA 70 and fill them with listed sealing compound. For concealed duct raceways, install fitting in flush steel box with blank cover plate having finish similar to that of adjacent plates or surfaces. Install duct sealing fittings in accordance with NFPA 70.
   h. Install devices to seal duct raceway interiors at accessible locations. Locate seals so no fittings or boxes are between the seal and the following changes of environments. Seal interior of duct raceways at the following points:
      1) Where conduits pass from warm to cold locations, such as boundaries of refrigerated spaces.
      2) Where an underground service duct raceway enters a building or structure.
      3) Conduit extending from interior to exterior of building.
      4) Conduit extending into pressurized duct raceway and equipment.
      5) Conduit extending into pressurized zones that are automatically controlled to maintain different pressure set points.
      6) Where otherwise required by NFPA 70.
   i. Do not install conduits within 2 inch of the bottom side of a metal deck roof.
   j. Keep duct raceways at least 6 inch away from parallel runs of flues and steam or hot-water pipes. Install horizontal duct raceway runs above water and steam piping.

k. Cut conduit perpendicular to the length. For conduits metric designator 53 (trade size 2) and larger, use roll cutter or a guide to make cut straight and perpendicular to the length. Ream inside of conduit to remove burrs.

l. Install pull wires in empty duct raceways. Provide polypropylene or monofilament plastic line with not less than 200 lb tensile strength. Leave at least 12 inch of slack at both ends of pull wire. Cap underground duct raceways designated as spare above grade alongside duct raceways in use.

m. Install duct raceways square to the enclosure and terminate at enclosures without hubs with locknuts on both sides of enclosure wall. Install locknuts hand tight, plus one-quarter turn more.

1) Termination fittings with shoulders do not require two locknuts.

n. Terminate threaded conduits into threaded hubs or with locknuts on inside and outside of boxes or cabinets. Install bushings on conduits up to metric designator 35 (trade size 1-1/4) and insulated throat metal bushings on metric designator 41 (trade size 1-1/2) and larger conduits terminated with locknuts..

2. FMC-A: Do not install aluminum duct raceways or fittings in contact with concrete or earth.

3. Types ERMC and IMC:

a. Threaded Conduit Joints, Exposed to Wet, Damp, Corrosive, or Outdoor Conditions: Apply listed compound that maintains electrical conductivity to threads of duct raceway and fittings before making up joints. Follow compound manufacturer's published instructions.

4. Type ERMC-S-PVC:

a. Follow manufacturer's installation instructions for clamping, cutting, threading, bending, and assembly.

b. Provide PVC-coated sealing locknut for exposed male threads transitioning into female NPT threads that do not have sealing sleeves, including transitions from PVC couplings/female adapters to Type ERMC-S-PVC elbows in direct-burial applications. PVC-coated sealing locknuts must not be used in place of conduit hub. PVC-coated sealing locknut must cover exposed threads on Type ERMC-S-PVC duct raceway.

c. Coat field-cut threads on PVC-coated duct raceway with manufacturer-approved corrosion-preventing conductive compound prior to assembly.

5. Types FMC, LFMC, and LFNC:

a. Provide a maximum of 72 inch of flexible conduit for recessed and semirecessed luminaires, equipment subject to vibration, noise transmission, or movement; and for transformers and motors.

6. Types PVC:

a. Do not install Type PVC, Type HDPE, or Type EPEC conduit where ambient temperature exceeds 122 deg F . Conductor ratings must be limited to 75 deg C except where installed in a trench outside buildings with concrete encasement, where 90 deg C conductors are permitted.

b. Comply with manufacturer's published instructions for solvent welding and fittings.

7. Duct Raceways Embedded in Slabs:

a. Run duct raceways larger than metric designator 27 (trade size 1) below concrete slab .

b. Arrange duct raceways to cross building expansion joints with expansion fittings at right angles to the joint.

c. Arrange duct raceways to ensure that each is surrounded by minimum of 1 inch of concrete without voids.

d. Do not embed threadless fittings in concrete unless locations have been specifically approved by Architect.

8. Stub-ups to Above Recessed Ceilings:

a. Provide EMT, IMC, or ERMC for duct raceways.

b. Provide a conduit bushing or insulated fitting to terminate stub-ups not terminated in hubs or in an enclosure.

9. Duct Raceway Terminations at Locations Subject to Moisture or Vibration:
   a. Provide insulating bushings to protect conductors, including conductors smaller than 4 AWG.
10. Duct Fittings: Install fittings in accordance with NEMA FB 2.10 guidelines.
   a. ERMC-S-PVC: Provide only fittings listed for use with this type of conduit. Patch and seal joints, nicks, and scrapes in PVC coating after installing conduits and fittings. Provide sealant recommended by fitting manufacturer and apply in thickness and number of coats recommended by manufacturer.
   b. EMT: Provide compression , steel fittings. Comply with NEMA FB 2.10.
   c. Flexible Conduit: Provide only fittings listed for use with flexible conduit type. Comply with NEMA FB 2.20.
11. Expansion-Joint Fittings:
   a. Install in runs of aboveground PVC that are located where environmental temperature change may exceed 30 deg F and that have straight-run length that exceeds 25 ft. Install in runs of aboveground ERMC and EMT conduit that are located where environmental temperature change may exceed 100 deg F and that have straight-run length that exceeds 100 ft.
   b. Install type and quantity of fittings that accommodate temperature change listed for the following locations:
      1) Outdoor Locations Not Exposed to Direct Sunlight: 125 deg F temperature change.
      2) Outdoor Locations Exposed to Direct Sunlight: 155 deg F temperature change.
      3) Indoor Spaces Connected with Outdoors without Physical Separation: 125 deg F temperature change.
      4) Attics: 135 deg F temperature change.
   c. Install fitting(s) that provide expansion and contraction for at least 0.00041 inch per foot of length of straight run per deg F of temperature change for PVC conduits. Install fitting(s) that provide expansion and contraction for at least 0.000078 inch per foot of length of straight run per deg F of temperature change for metal conduits.
   d. Install expansion fittings at locations where conduits cross building or structure expansion joints.
   e. Install expansion-joint fitting with position, mounting, and piston setting selected in accordance with manufacturer's published instructions for conditions at specific location at time of installation. Install conduit supports to allow for expansion movement.
12. Duct Raceways Penetrating Rooms or Walls with Acoustical Requirements: Seal duct raceway openings on both sides of rooms or walls with acoustically rated putty or firestopping.
13. Identification: Provide labels for conduit assemblies, duct raceways, and associated electrical equipment.
   a. Provide warning signs.

D. Interfaces with Other Work:

1. Coordinate with Section 078413 "Penetration Firestopping" for installation of firestopping at penetrations of fire-rated floor and wall assemblies.
2. Coordinate with Section 260529 "Hangers and Supports for Electrical Systems" for installation of conduit hangers and supports.

3.3 PROTECTION

A. Protect coatings, finishes, and cabinets from damage and deterioration.

1. Repair damage to galvanized finishes with zinc-rich paint recommended by manufacturer.
2. Repair damage to PVC coatings or paint finishes with matching touchup coating recommended by manufacturer.

END OF SECTION 260533.13

SECTION 260533.16 - BOXES AND COVERS FOR ELECTRICAL SYSTEMS

PART 1 - GENERAL

1.1 SUMMARY

A. Section Includes:

1. Metallic outlet boxes, device boxes, rings, and covers.
2. Junction boxes and pull boxes.
3. Cover plates for device boxes.
4. Hoods for outlet boxes.

B. Products Installed, but Not Furnished, under This Section:

1. See Section 260553 "Identification for Electrical Systems" for electrical equipment labels.

1.2 ACTION SUBMITTALS

A. Product Data:

1. Metallic outlet boxes, device boxes, rings, and covers.
2. Junction boxes and pull boxes.
3. Cover plates for device boxes.
4. Hoods for outlet boxes.

1.3 INFORMATIONAL SUBMITTALS

PART 2 - PRODUCTS

2.1 METALLIC OUTLET BOXES, DEVICE BOXES, RINGS, AND COVERS

A. Performance Criteria:

1. Regulatory Requirements: Listed and labeled in accordance with NFPA 70, by qualified electrical testing laboratory recognized by authorities having jurisdiction, and marked for intended location and application.
2. Listing Criteria: UL CCN QCIT; including UL 514A.

B. UL QCIT - Metallic Outlet Boxes and Covers:

1. Description: Box having pryout openings, knockouts, threaded entries, or hubs in either the sides of the back, or both, for entrance of conduit, conduit or cable fittings, or cables, with provisions for mounting outlet box cover, but without provisions for mounting wiring device directly to box.
2. Manufacturers: Subject to compliance with requirements, provide products by one of the following:

a. ABB, Electrification Business.
b. Arlington Industries, Inc.
c. Hubbell Premise Wiring; brand of Hubbell Electrical Solutions; Hubbell Incorporated.
d. Hubbell Wiring Device-Kellems; brand of Hubbell Electrical Solutions; Hubbell Incorporated.
e. MonoSystems, Inc.

3. Options:
   a. Material: Sheet steel Sheet aluminum Cast metal.
   b. Sheet Metal Depth: Minimum 2 inch .
   c. Cast-Metal Depth: Minimum 2.4 inch.
   d. Luminaire Outlet Boxes and Covers: Nonadjustable, listed and labeled for attachment of luminaire weighing up to 50 lb .

C. UL QCIT - Metallic Conduit Bodies:

1. Description: Means for providing access to interior of conduit or tubing system through one or more removable covers at junction or terminal point. In the United States, conduit bodies are listed in accordance with outlet box requirements.
2. Manufacturers: Subject to compliance with requirements, provide products by one of the following:
   a. ABB, Electrification Business.
   b. Appleton; Emerson Electric Co., Automation Solutions.
   c. O-Z/Gedney; brand of Emerson Electric Co., Automation Solutions, Appleton Group.
   d. Pass & Seymour; Legrand North America, LLC.
   e. Patriot Aluminum Products, LLC.
   f. Plasti-Bond; Robroy Industries.

D. UL QCIT - Metallic Device Boxes:

1. Description: Box with provisions for mounting wiring device directly to box.
2. Manufacturers: Subject to compliance with requirements, provide products by one of the following:
   a. ABB, Electrification Business.
   b. Arlington Industries, Inc.
   c. Hubbell Premise Wiring; brand of Hubbell Electrical Solutions; Hubbell Incorporated.
   d. Hubbell Wiring Device-Kellems; brand of Hubbell Electrical Solutions; Hubbell Incorporated.
   e. Killark; brand of Hubbell Electrical Solutions; Hubbell Incorporated.
   f. O-Z/Gedney; brand of Emerson Electric Co., Automation Solutions, Appleton Group.
3. Options:
   a. Material: Sheet steel Sheet aluminum Cast metal.
   b. Sheet Metal Depth: minimum 2.5 inch .
   c. Cast-Metal Depth: minimum 2.4 inch.

E. UL QCIT - Metallic Extension Rings:

1. Description: Ring intended to extend sides of outlet box or device box to increase box depth, volume, or both.
2. Manufacturers: Subject to compliance with requirements, provide products by one of the following:
   a. ABB, Electrification Business.
   b. Appleton; Emerson Electric Co., Automation Solutions.
   c. Cooper B-line; brand of Eaton, Electrical Sector.

d. Hubbell Wiring Device-Kellems; brand of Hubbell Electrical Solutions; Hubbell Incorporated.
e. O-Z/Gedney; brand of Emerson Electric Co., Automation Solutions, Appleton Group.
f. Pass & Seymour; Legrand North America, LLC.
g. Raco Taymac Bell; brand of Hubbell Electrical Solutions; Hubbell Incorporated.
h. Topaz Lighting & Electric.

2.2 JUNCTION BOXES AND PULL BOXES

A. Performance Criteria:

1. Regulatory Requirements: Listed and labeled in accordance with NFPA 70 and marked for intended location and use.

B. Manufacturers: Subject to compliance with requirements, provide products by one of the following:
1. Adalet; division of Scott Fetzer Co.
2. Appleton; Emerson Electric Co., Automation Solutions.
3. Cooper B-line; brand of Eaton, Electrical Sector.
4. Hubbell Industrial Controls; brand of Hubbell Electrical Solutions; Hubbell Incorporated.
5. O-Z/Gedney; brand of Emerson Electric Co., Automation Solutions, Appleton Group.
6. Raco Taymac Bell; brand of Hubbell Electrical Solutions; Hubbell Incorporated.
7. Square D; Schneider Electric USA.

C. Listing Criteria: Investigated, labeled, and marked by qualified electrical testing laboratory in accordance with guide information and standards specified for the following UL product categories:

1. UL CCN BGUZ; including UL 50 and UL 50E.

D. UL BGUZ – Indoor Sheet Metal Junction and Pull Boxes:

1. Description: Box with a blank cover that serves the purpose of joining different runs of raceway or cable.
2. Options:
a. Degree of Protection: Type 1.

E. UL BGUZ - Outdoor Sheet Metal Junction and Pull Boxes:
1. Description: Box with a blank cover that serves the purpose of joining different runs of raceway or cable.
2. Options:
a. Degree of Protection: Type 3R.

2.3 COVER PLATES FOR DEVICES BOXES

A. Performance Criteria:

1. Regulatory Requirements: Listed and labeled in accordance with NFPA 70 and marked for intended location and use.
2. Wallplate-Securing Screws: Metal with head color to match wallplate finish.

B. UL QCIT or QCMZ - Nonmetallic Cover Plates for Device Boxes:

1. Manufacturers: Subject to compliance with requirements, provide products by one of the following:
   a. ABB, Electrification Business.
   b. Appleton; Emerson Electric Co., Automation Solutions.
   c. Arlington Industries, Inc.
   d. Arrow Hart, Wiring Devices; Eaton, Electrical Sector.
   e. Hubbell Premise Wiring; brand of Hubbell Electrical Solutions; Hubbell Incorporated.
   f. Hubbell Wiring Device-Kellems; brand of Hubbell Electrical Solutions; Hubbell Incorporated.
   g. Leviton Manufacturing Co., Inc.
   h. O-Z/Gedney; brand of Emerson Electric Co., Automation Solutions, Appleton Group.
   i. Panduit Corp.
   j. Pass & Seymour; Legrand North America, LLC.
   k. Topaz Lighting & Electric.
   l. Wiremold; Legrand North America, LLC.
2. Options:
   a. Damp and Wet Locations: Listed, labeled, and marked for location and use. Provide gaskets and accessories necessary for compliance with listing.
   b. Wallplate Material: 0.060 inch thick, high-impact thermoplastic (nylon) with smooth finish and color matching wiring device .
   c. Color: White.

2.4 HOODS FOR OUTLET BOXES

A. Performance Criteria:

1. Regulatory Requirements: Listed and labeled in accordance with NFPA 70 and marked for intended location and use.
2. Listing Criteria:
   a. Receptacle, Hood, Cover Plate, Gaskets, and Seals: UL 498 Supplement SA when mated with box or enclosure complying with UL 514A, UL 514C, or UL 50E.
3. Mounts to box using fasteners different from wiring device.

B. UL QCIT or QCMZ - Retractable or Reattachable Hoods for Outlet Boxes:

1. Manufacturers: Subject to compliance with requirements, available manufacturers offering products that may be incorporated into the Work include, but are not limited to, the following:
   a. ABB, Electrification Business.
   b. Raco Taymac Bell; brand of Hubbell Electrical Solutions; Hubbell Incorporated.

2. Options:
   a. Provides gray, weatherproof, "while-in-use" cover.

PART 3 - EXECUTION

3.1 SELECTION OF BOXES AND COVERS FOR ELECTRICAL SYSTEMS

A. Unless more stringent requirements are specified in Contract Documents or manufacturers' published instructions, comply with NFPA 70 for selection of boxes and enclosures. Consult Architect for resolution of conflicting requirements.

B. Degree of Protection:

1. Outdoors:
   a. Type 3R unless otherwise indicated.
2. Indoors:
   a. Type 1 unless otherwise indicated.
   b. Damp or Dusty Locations: Type 2.

3.2 INSTALLATION OF BOXES AND COVERS FOR ELECTRICAL SYSTEMS

A. Comply with manufacturer's published instructions.

B. Reference Standards for Installation: Unless more stringent installation requirements are specified in Contract Documents or manufacturers' published instructions, comply with the following:

1. Outlet, Device, Pull, and Junction Boxes: Article 314 of NFPA 70.
2. Consult Architect for resolution of conflicting requirements.

C. Special Installation Techniques:

1. Provide boxes in wiring and raceway systems wherever required for pulling of wires, making connections, and mounting of devices or fixtures.
2. Mount boxes at heights indicated on Drawings. If mounting heights of boxes are not individually indicated, give priority to ADA requirements. Install boxes with height measured to center of box unless otherwise indicated.
3. Recessed Boxes in Masonry Walls: Saw-cut opening for box in center of cell of masonry block, and install box flush with surface of wall. Prepare block surfaces to provide a flat surface for a raintight connection between box and cover plate or supported equipment and box, whether installed indoors or outdoors.
4. Horizontally separate boxes mounted on opposite sides of walls so they are not in the same vertical channel.
5. Locate boxes so that cover or plate will not span different building finishes.
6. Support boxes in recessed ceilings independent of ceiling tiles and ceiling grid.
7. Support boxes of three gangs or more from more than one side by spanning two framing members or mounting on brackets specifically designed for purpose.
8. Fasten junction and pull boxes to, or support from, building structure. Do not support boxes by conduits.
9. Set metal floor boxes level and flush with finished floor surface.

10. Set nonmetallic floor boxes level. Trim after installation to fit flush with finished floor surface.
11. Do not install aluminum boxes, enclosures, or fittings in contact with concrete or earth.
12. Do not rely on locknuts to penetrate nonconductive coatings on enclosures. Remove coatings in the locknut area prior to assembling conduit to enclosure to ensure a continuous ground path.
13. Boxes and Enclosures in Areas or Walls with Acoustical Requirements:
    a. Seal openings and knockouts in back and sides of boxes and enclosures with acoustically rated putty.
    b. Provide gaskets for wallplates and covers.
14. Identification: Provide labels for boxes and associated electrical equipment.
    a. Identify field-installed conductors, interconnecting wiring, and components.
    b. Provide warning signs.
    c. Label each box with engraved metal or laminated-plastic nameplate.

3.3 PROTECTION

A. After installation, protect boxes from construction activities. Remove and replace items that are contaminated, defaced, damaged, or otherwise caused to be unfit for use prior to acceptance by Owner.

END OF SECTION 260533.16

SECTION 260533.23 - SURFACE RACEWAYS FOR ELECTRICAL SYSTEMS

PART 1 - GENERAL

1.1 SUMMARY

A. Section Includes:

1. Surface metal raceways and fittings.
2. Wireways and auxiliary gutters.

B. Products Installed, but Not Furnished, under This Section:

1. See Section 260553 "Identification for Electrical Systems" for electrical equipment labels.

1.2 ACTION SUBMITTALS

A. Product Data:

1. Surface metal raceways and fittings.
2. Wireways and auxiliary gutters.

1.3 INFORMATIONAL SUBMITTALS

PART 2 - PRODUCTS

2.1 SURFACE METAL RACEWAYS AND FITTINGS

A. Performance Criteria:

1. Regulatory Requirements: Listed and labeled in accordance with NFPA 70, by qualified electrical testing laboratory recognized by authorities having jurisdiction, and marked for intended location and application.
2. Listing Criteria: UL CCN RJBT; including UL 5.

B. Source Quality Control:

1. Product Data: Prepare and submit catalog cuts, brochures, and performance data illustrating size, physical appearance, and other characteristics of product.
2. Manufacturer's Published Instructions: Prepare and submit installation, testing, and operating instructions for product.
3. Samples:
   a. Surface Metallic Raceway Nonmetallic Cover Samples for Initial Selection: Manufacturer's standard color sheets, showing full range of available colors for each type, 12 inch long.

C. UL RJBT - Surface Metal Raceways and Fittings with Metal Covers:

1. Manufacturers: Subject to compliance with requirements, provide products by one of the following:
   a. Hubbell Wiring Device-Kellems; brand of Hubbell Electrical Solutions; Hubbell Incorporated.
   b. MonoSystems, Inc.
   c. Wiremold; Legrand North America, LLC.
2. Options:
   a. Aluminum base with snap-on covers.
   b. Manufacturer's standard enamel finish in color selected by Architect .
   c. Wiring Channels: Dual . Multiple channels must be capable of housing a standard 20 to 30 A device flush within the raceway.

2.2 WIREWAYS AND AUXILIARY GUTTERS

A. Performance Criteria:

1. Regulatory Requirements: Listed and labeled in accordance with NFPA 70, by qualified electrical testing laboratory recognized by authorities having jurisdiction, and marked for intended location and application.
2. Listing Criteria:
   a. UL CCN ZOYX; including UL 870.
   b. UL 94, V-0 requirements for self-extinguishing characteristics.

B. Source Quality Control:

1. Product Data: Prepare and submit catalog cuts, brochures, and performance data illustrating size, physical appearance, and other characteristics of product.
2. Manufacturer's Published Instructions: Prepare and submit installation, testing, and operating instructions for product.

C. UL ZOYX - Metal Wireways and Auxiliary Gutters:

1. Manufacturers: Subject to compliance with requirements, provide products by one of the following:
   a. ABB, Electrification Business.
   b. Cooper B-line; brand of Eaton, Electrical Sector.
   c. MonoSystems, Inc.
   d. Square D; Schneider Electric USA.
   e. Wiegmann; brand of Hubbell Electrical Solutions; Hubbell Incorporated.
2. Additional Characteristics:
   a. Fittings and Accessories: Include covers, couplings, offsets, elbows, expansion joints, adapters, hold-down straps, end caps, and other fittings to match and mate with wireways as required for complete system.
   b. Finish: Manufacturer's standard enamel finish.
3. Options:
   a. Degree of Protection: Type 1 unless otherwise indicated.
   b. Wireway Covers: Screw-cover type unless otherwise indicated.

PART 3 - EXECUTION

3.1 INSTALLATION OF SURFACE RACEWAYS FOR ELECTRICAL SYSTEMS

A. Comply with manufacturer's published instructions.

B. Reference Standards for Installation: Unless more stringent installation requirements are specified in Contract Documents or manufacturers' published instructions, comply with the following:

1. Auxiliary Gutters: Article 366 of NFPA 70.
2. Surface Metal Raceway: Article 386 of NFPA 70.
3. Consult Architect for resolution of conflicting requirements.

C. Special Installation Techniques:

1. Install surface raceways only where indicated on Drawings.
2. Install surface raceway with a minimum 2 inch radius control at bend points.
3. Secure surface raceway with screws or other anchor-type devices at intervals not exceeding 48 inch and with no less than two supports per straight raceway section. Support surface raceway in accordance with manufacturer's published instructions. Tape and glue are unacceptable support methods.
4. Identification: Provide labels for surface raceways and associated electrical equipment.
   a. Identify field-installed conductors, interconnecting wiring, and components.
   b. Provide warning signs.

3.2 PROTECTION

A. After installation, protect surface raceways from construction activities. Remove and replace items that are contaminated, defaced, damaged, or otherwise caused to be unfit for use prior to acceptance by Owner.

END OF SECTION 260533.23

SECTION 260543 - UNDERGROUND DUCTS AND RACEWAYS FOR ELECTRICAL SYSTEMS

PART 1 - GENERAL

1.1 SUMMARY

A. Section Includes:

1. Handholes and boxes for exterior underground wiring.
2. Duct sealing.

B. Related Requirements:

1. Section 260519 "Low-Voltage for Electrical Power Conductors and Cables" specifies nonmetallic underground conduit with conductors (Type NUCC).
2. Section 260553 "Identification for Electrical Systems" specifies underground-line warning tape and concrete cable routing markers (warning planks).
3. Ducts in this sections shall be schedule 40 PVC. See requirements for schedule 40 PVC in 260533.13 "Conduits For Electrical Systems".

1.2 ACTION SUBMITTALS

A. Product Data: For each type of product.

1. For concrete and steel used in precast concrete handholes, also include product certificates as required by ASTM C858.

1.3 INFORMATIONAL SUBMITTALS

1.4 REGULATORY AGENCY APPROVALS

PART 2 - PRODUCTS

2.1 HANDHOLES AND BOXES FOR EXTERIOR UNDERGROUND WIRING

A. Performance Criteria:

1. Regulatory Requirements: Listed and labeled in accordance with NFPA 70 and marked for intended location and use.
2. General Characteristics:
   a. ASTM C858 for design and manufacturing processes.
   b. SCTE 77.

B. Source Quality Control:

1. Precast Concrete Utility Structures: Test and inspect in accordance with ASTM C1037.

2. Polymer Concrete and Nonconcrete Handhole and Pull-Box Prototypes: Test prototypes of handholes and boxes for compliance with SCTE 77. Strength tests must be for specified tier ratings of products supplied. Testing machine pressure gages must have current calibration certification, complying with ISO 9000 and ISO 10012, and traceable to NIST standards.
   a. Tests of materials must be performed by independent testing agency.
   b. Strength tests of complete boxes and covers must be by independent testing agency or manufacturer. Qualified registered professional engineer must certify tests by manufacturer.

C. Precast Concrete Handholes and Boxes :

1. Description: Factory-fabricated, reinforced-concrete, monolithically poured walls and bottom unless open-bottom enclosures are indicated. Frame and cover must form top of enclosure and must have load rating consistent with that of handhole or box.
2. Manufacturers: Subject to compliance with requirements, provide products by one of the following:
   a. Elmhurst-Chicago Stone Co.
   b. Oldcastle Infrastructure Inc.; CRH Americas.
   c. Riverton Concrete Products.
   d. Smith-Midland Corporation.
   e. Wausau Tile, Inc.
3. Configuration: Units must be designed for flush burial and have open bottom unless otherwise indicated.
4. Frame and Cover:
   a. Weatherproof steel frame, with steel cover with recessed cover hook eyes and tamper-resistant, captive, cover-securing bolts.
   b. Cover Finish: Nonskid finish must have minimum coefficient of friction of 0.50.
   c. Cover Legend: Molded lettering, "ELECTRIC" .
5. Extensions and Slabs: Designed to mate with bottom of enclosure. Same material as enclosure.
   a. Extension must provide increased depth of 12 inch .
   b. Slab: Same dimensions as bottom of enclosure, and arranged to provide closure.
6. Joint Sealant: Asphaltic-butyl material with adhesion, cohesion, flexibility, and durability properties necessary to withstand maximum hydrostatic pressures at installation location with ground-water level at grade.
7. Knockout Panels: Precast openings in walls, arranged to match dimensions and elevations of approaching duct, plus additional 12 inch vertically and horizontally to accommodate alignment variations.
8. Duct Entrances in Handhole Walls: Cast end-bell or duct-terminating fitting in wall for each entering duct.
9. Handholes 12 inch wide by 24 inch long and larger must have inserts for cable racks and pulling-in irons installed before concrete is poured.

2.2 DUCT SEALING

A. Manufacturers: Subject to compliance with requirements, provide products by one of the following:

1. ABB, Electrification Business.
2. American Polywater Corporation.
3. CommScope, Inc.
4. Ideal Industries, Inc.

5. NSi Industries LLC.
6. TE Connectivity Ltd.

B. Duct-Sealing Compound: Nonhardening, safe for contact with human skin, not deleterious to cable insulation, and workable at temperatures as low as 35 deg F. Compound must be capable of withstanding temperature of 300 deg F without slump and adhering to clean surfaces of plastic ducts, metallic conduit, conduit and duct coatings, concrete, masonry, lead, cable sheaths, cable jackets, insulation materials, and common metals. Duct sealing compound must be removable without damaging ducts or cables.

PART 3 - EXECUTION

3.1 PREPARATION

A. Coordinate layout and installation of duct, duct bank, manholes, handholes, and boxes with final arrangement of other utilities, site grading, and surface features as determined in field. Notify Architect if there is conflict between areas of excavation and existing structures or archaeological sites to remain.

B. Coordinate elevations of duct and duct-bank entrances into manholes, handholes, and boxes with final locations and profiles of duct and duct banks, as determined by coordination with other utilities, underground obstructions, and surface features. Revise locations and elevations as required to suit field conditions and to ensure that duct and duct bank will drain to manholes and handholes, and as approved by Architect.

3.2 SELECTION OF UNDERGROUND DUCTS

A. Duct for Electrical Branch Circuits: , direct buried unless otherwise indicated.

3.3 SELECTION OF UNDERGROUND ENCLOSURES

A. Handholes and Boxes:

1. Units in Sidewalk and Similar Applications with Safety Factor for Nondeliberate Loading by Vehicles: Precast concrete, AASHTO HB 17, H-10 structural load rating.
2. Cover design load must not exceed load rating of handhole or box.

3.4 EARTHWORK

A. Excavation and Backfill: Comply with Section 312000 "Earth Moving," but do not use heavy-duty, hydraulic-operated, compaction equipment.

B. Restoration: Restore area after construction vehicle traffic in immediate area is complete.

C. Restore surface features at areas disturbed by excavation, and re-establish original grades unless otherwise indicated. Replace removed sod immediately after backfilling is completed.

D. Restore areas disturbed by trenching, storing of dirt, cable laying, and other work. Restore vegetation and include necessary topsoiling, fertilizing, liming, seeding, sodding, sprigging, and mulching. Comply with Section 329200 "Turf and Grasses" and Section 329300 "Plants."

E. Cut and patch existing pavement in path of underground duct, duct bank, and underground structures in accordance with "Cutting and Patching" Article in Section 017300 "Execution."

3.5 INSTALLATION OF DUCTS AND DUCT BANKS

A. Reference Standards:

1. Unless more stringent requirements are specified in Contract Documents or manufacturers' published instructions, comply with NEMA TCB 2 for installation of underground ducts and duct banks.
2. Consult Architect for resolution of conflicting requirements.

B. Special Techniques:

1. Where indicated on Drawings, install duct, spacers, and accessories into duct-bank configuration shown. Duct installation requirements in this Section also apply to duct bank.
2. Steel raceway, bends, and fittings in single duct run or duct bank must be of same type.
3. Slope: Pitch duct minimum slope of 1:300 down toward manholes and handholes and away from buildings and equipment. Slope duct from high point between two manholes to drain in both directions.
4. Expansion and Deflection Fittings: Install expansion and deflection fitting in each duct in area of disturbed earth adjacent to manhole or handhole.
5. Install expansion fitting near center of straight line duct with calculated expansion of more than 3/4 inch.
6. Curves and Bends:
   a. Use 5-degree angle couplings for small changes in direction. Use manufactured long sweep bends with minimum radius of 48 inch , both horizontally and vertically, at other locations unless otherwise indicated.
   b. Field bending must be in accordance with NFPA 70 minimum radii requirements, except bends over 45 degrees must be made with minimum radius of 48 inch . Use only equipment specifically designed for material and size involved. Use PVC heating bender for bending PVC conduit.
   c. Duct must have maximum of 180 degrees of bends between pull points.
7. Joints: Use solvent-cemented joints in nonmetallic duct and fittings and make watertight in accordance with manufacturer's published instructions. Stagger couplings so those of adjacent duct do not lie in same plane. Couple steel conduits to ducts with adapters designed for this purpose, and encase coupling with minimum 3 inch of concrete for minimum of 12 inch on each side of coupling.
   a. Install insulated grounding bushings on steel raceway terminations that are less than 12 inch below grade or floor level and do not terminate in hubs.
8. End Bell Entrances to Manholes and Concrete and Polymer Concrete Handholes: Use end bells, spaced approximately 10 inch o.c. for 5 inch duct, and vary proportionately for other duct sizes.
   a. Begin change from regular spacing to end-bell spacing 10 ft from end bell, without reducing duct slope and without forming trap in line.
   b. Grout end bells into structure walls from both sides to provide watertight entrances.

9. Duct Terminators for Entrances to Cast-in-Place Manholes and Concrete Handholes: Use manufactured, cast-in-place duct terminators, with entrances into structure spaced approximately 6 inch o.c. for 4 inch duct, and vary proportionately for other duct sizes.
    a. Begin change from regular spacing to terminator spacing 10 ft from terminator, without reducing duct line slope and without forming trap in line.
10. Building Wall Penetrations: Make transition from underground duct to steel raceway at least 10 ft outside building wall, without reducing duct line slope away from building and without forming trap in line. Use fittings manufactured for transition to steel raceway type installed. Install steel raceway penetrations of building walls as specified in Section 260544 "Sleeves and Sleeve Seals for Electrical Raceways and Cabling."
11. Sealing: Provide temporary closure at terminations of duct with pulled cables. Seal spare duct at terminations. Use sealing compound and plugs to withstand at least 15 psig hydrostatic pressure.
12. Pulling Cord: Install 200 lbf test nylon cord in empty ducts.
13. Concrete-Encased Ducts and Duct Bank:
    a. Excavate trench bottom to provide firm and uniform support for duct. Prepare trench bottoms as specified in Section 312000 "Earth Moving" for pipes 6 inch or less in nominal diameter.
    b. Width: Excavate trench 3 inch wider than duct on each side.
    c. Depth: Install so top of duct envelope is at least 24 inch below finished grade in areas not subject to deliberate traffic, and at least 30 inch below finished grade in deliberate traffic paths for vehicles unless otherwise indicated. Install so top of duct envelope is below local frost line.
    d. Support duct on duct spacers coordinated with duct size, duct spacing, and outdoor temperature.
    e. Spacer Installation: Place spacers close enough to prevent sagging and deforming of duct, with not less than four spacers per 20 ft of duct. Place spacers within 24 inch of duct ends. Stagger spacers approximately 6 inch between tiers. Secure spacers to earth and to duct to prevent floating during concreting. Tie entire assembly together using fabric straps; do not use tie wires or reinforcing steel that may form conductive or magnetic loops around ducts or duct groups.
    f. Minimum Space between Ducts: 3 inch between edge of duct and exterior envelope wall, 2 inch between ducts for like services, and 4 inch between power and communications ducts.
    g. Reinforcement: Reinforce concrete-encased duct where crossing disturbed earth and where indicated. Arrange reinforcing rods and ties without forming conductive or magnetic loops around ducts or duct groups.
    h. Forms: Use walls of trench to form side walls of duct bank where soil is self-supporting and concrete envelope can be poured without soil inclusions; otherwise, use forms.
    i. Concrete Cover: Install minimum of 3 inch of concrete cover between edge of duct to exterior envelope wall, 2 inch between duct of like services, and 4 inch between power and communications ducts.
    j. Place minimum 6 inch of engineered fill above concrete encasement of duct.
    k. Pouring Concrete: Comply with requirements in "Concrete Placement" Article in Section 033000 "Cast-in-Place Concrete." Place concrete carefully during pours to prevent voids under and between duct and at exterior surface of envelope. Do not allow heavy mass of concrete to fall directly onto ducts. Allow concrete to flow around duct and rise up in middle, uniformly filling open spaces. Do not use power-driven agitating equipment unless specifically designed for duct-installation application.
14. Direct-Buried Duct and Duct Bank:

a. Excavate trench bottom to provide firm and uniform support for duct. Comply with requirements in Section 312000 "Earth Moving" for preparation of trench bottoms for pipes less than 6 inch in nominal diameter.
b. Width: Excavate trench 12 inch wider than duct on each side.
c. Depth: Install top of duct at least 36 inch below finished grade unless otherwise indicated.
d. Set elevation of top of duct bank below frost line.
e. Place minimum 3 inch of sand as bed for duct. Place sand to minimum of 6 inch above top level of duct.
f. Support ducts on duct spacers coordinated with duct size, duct spacing, and outdoor temperature.
g. Spacer Installation: Place spacers close enough to prevent sagging and deforming of duct, with not less than four spacers per 20 ft of duct. Place spacers within 24 inch of duct ends. Stagger spacers approximately 6 inch between tiers. Secure spacers to earth and to ducts to prevent floating during concreting. Tie entire assembly together using fabric straps; do not use tie wires or reinforcing steel that may form conductive or magnetic loops around ducts or duct groups.
h. Install duct with minimum of 3 inch between ducts for like services and 6 inch between power and communications duct.
i. After installing first tier of duct, backfill and compact. Start at tie-in point and work toward end of duct run, leaving ducts at end of run free to move with expansion and contraction as temperature changes during this process. Repeat procedure after placing each tier. After placing last tier, hand place backfill to 4 inch over duct and hand tamp. Firmly tamp backfill around ducts to provide maximum supporting strength. Use hand tamper only. After placing controlled backfill over final tier, make final duct connections at end of run and complete backfilling with normal compaction. Comply with requirements in Section 312000 "Earth Moving" for installation of backfill materials.

15. Ground ducts and duct banks in accordance with Section 260526 "Grounding and Bonding for Electrical Systems."

3.6 INSTALLATION OF CONCRETE MANHOLES, HANDHOLES, AND BOXES

A. Reference Standards:

1. Precast Concrete Handholes: Comply with ASTM C891 unless otherwise indicated.
2. Consult Architect for resolution of conflicting requirements.

B. Special Techniques:

1. Elevations:
   a. Manhole Roof: Install with rooftop at least 15 inch below finished grade.
   b. Manhole Frame: In paved areas and trafficways, set frames flush with finished grade. Set other manhole frames 1 inch above finished grade.
   c. Handhole Covers: In paved areas and trafficways, set surface flush with finished grade. Set covers of other handholes 1 inch above finished grade.
   d. Where indicated, cast handhole cover frame integrally with handhole structure.
2. Drainage: Install drains in bottom of manholes where indicated. Coordinate with drainage provisions indicated.
3. Hardware: Install removable hardware, including pulling eyes, cable stanchions, and cable arms, and insulators, as required for installation and support of cables and conductors and as indicated.

4. Field-Installed Bolting Anchors in Manholes and Concrete Handholes: Do not drill deeper than 3-7/8 inch for manholes and 2 inch for handholes, for anchor bolts installed in field. Use minimum of two anchors for each cable stanchion.
5. Ground manholes, handholes, and boxes in accordance with Section 260526 "Grounding and Bonding for Electrical Systems."

3.7 INSTALLATION OF HANDHOLES AND BOXES OTHER THAN PRECAST CONCRETE

A. Special Techniques:

1. Install handholes and boxes level and plumb and with orientation and depth coordinated with connecting duct, to minimize bends and deflections required for proper entrances. Use box extension if required to match depths of duct, and seal joint between box and extension as recommended by manufacturer.
2. Unless otherwise indicated, support units on level bed of crushed stone or gravel, graded from 1/2 inch sieve to No. 4 sieve and compacted to same density as adjacent undisturbed earth.
3. Elevation: In paved areas and trafficways, set cover flush with finished grade. Set covers of other handholes 1 inch above finished grade.
4. Install removable hardware, including pulling eyes, cable stanchions, cable arms, and insulators, as required for installation and support of cables and conductors and as indicated. Select arm lengths to be long enough to provide spare space for future cables, but short enough to preserve adequate working clearances in enclosure.
5. Field cut openings for duct in accordance with enclosure manufacturer's published instructions. Cut wall of enclosure with tool designed for material to be cut. Size holes for terminating fittings to be used, and seal around penetrations after fittings are installed.
6. Ground handholes and boxes in accordance with Section 260526 "Grounding and Bonding for Electrical Systems."

END OF SECTION 260543

SECTION 260544 - SLEEVES AND SLEEVE SEALS FOR ELECTRICAL RACEWAYS AND CABLING

PART 1 - GENERAL

1.1 SUMMARY

A. Section Includes:

1. Round sleeves.
2. Rectangular sleeves.
3. Sleeve-seal systems.
4. Sleeve-seal fittings.
5. Grout.
6. Pourable sealants.
7. Foam sealants.

B. Related Requirements:

1. Section 078413 "Penetration Firestopping" for penetration firestopping installed in fire-resistance-rated walls, horizontal assemblies, and smoke barriers, with and without penetrating items.

1.2 ACTION SUBMITTALS

A. Product Data: For each type of product.

PART 2 - PRODUCTS

2.1 ROUND SLEEVES

A. Steel Wall Sleeves:

1. General Characteristics: ASTM A53/A53M, Type E, Grade B, Schedule 40, zinc coated, plain ends and integral waterstop.

B. Round, Galvanized-Steel, Sheet Metal Sleeves:

1. General Characteristics: Galvanized-steel sheet; thickness not less than 0.0239 inch; round tube closed with welded longitudinal joint, with tabs for screw-fastening the sleeve to the board.

2.2 RECTANGULAR SLEEVES

A. Rectangular, Galvanized-Steel, Sheet Metal Sleeves:

1. General Characteristics:
   a. Material: Galvanized sheet steel.

b. Minimum Metal Thickness:
   1) For sleeve cross-section rectangle perimeter less than 50 inch and with no side larger than 16 inch, thickness must be 0.052 inch.
   2) For sleeve cross-section rectangle perimeter not less than 50 inch or with one or more sides larger than 16 inch, thickness must be 0.138 inch.

2.3 SLEEVE-SEAL SYSTEMS

A. General Characteristics: Modular sealing device, designed for field assembly, to fill annular space between sleeve and raceway or cable or between raceway and cable.

B. Options:

1. Sealing Elements: EPDM rubber interlocking links shaped to fit surface of pipe. Include type and number required for pipe material and size of pipe.
2. Pressure Plates: Carbon steel .
3. Connecting Bolts and Nuts: Stainless steel of length required to secure pressure plates to sealing elements.

2.4 SLEEVE-SEAL FITTINGS

A. General Characteristics: Manufactured plastic, sleeve-type, waterstop assembly made for embedding in concrete slab or wall. Unit must have plastic or rubber waterstop collar with center opening to match piping OD.

2.5 GROUT

A. General Characteristics: Nonshrink; recommended for interior and exterior sealing openings in non-fire-rated walls or floors.

1. Standard: ASTM C1107/C1107M, Grade B, post-hardening and volume-adjusting, dry, hydraulic-cement grout.
2. Design Mix: 5000 psi, 28-day compressive strength.
3. Packaging: Premixed and factory packaged.

2.6 POURABLE SEALANTS

A. Performance Criteria:

1. General Characteristics: Single-component, neutral-curing elastomeric sealants of grade indicated below.
   a. Grade: Pourable (self-leveling) formulation for openings in floors and other horizontal surfaces that are not fire rated.

2.7 FOAM SEALANTS

A. Performance Criteria:

1. General Characteristics: Multicomponent, liquid elastomers that, when mixed, expand and cure in place to produce a flexible, nonshrinking foam. Foam expansion must not damage cables or crack penetrated structure.

PART 3 - EXECUTION

3.1 INSTALLATION OF SLEEVES FOR NON-FIRE-RATED ELECTRICAL PENETRATIONS

A. Sleeves for Conduits Penetrating Above-Grade, Non-Fire-Rated, Concrete and Masonry-Unit Floors and Walls:

1. Interior Penetrations of Non-Fire-Rated Walls and Floors:
   a. Seal space outside of sleeves with mortar or grout. Pack sealing material solidly between sleeve and wall or floor so no voids remain. Tool exposed surfaces smooth; protect material while curing.
   b. Seal annular space between sleeve and raceway or cable, using joint sealant appropriate for size, depth, and location of joint. Comply with requirements in Section 079200 "Joint Sealants."
2. Use pipe sleeves unless penetration arrangement requires rectangular sleeved opening.
3. Size pipe sleeves to provide 1/4 inch annular clear space between sleeve and raceway or cable, unless sleeve-seal system is to be installed.
4. Install sleeves for wall penetrations unless core-drilled holes or formed openings are used. Install sleeves during erection of walls. Cut sleeves to length for mounting flush with both surfaces of walls. Deburr after cutting.
5. Install sleeves for floor penetrations. Extend sleeves installed in floors 2 inch above finished floor level. Install sleeves during erection of floors.

B. Sleeves for Conduits Penetrating Non-Fire-Rated Wall Assemblies:

1. Use circular metal sleeves unless penetration arrangement requires rectangular sleeved opening.
2. Seal space outside of sleeves with approved joint compound for wall assemblies.

C. Roof-Penetration Sleeves: Seal penetration of individual raceways and cables with flexible boot-type flashing units applied in coordination with roofing work.

D. Aboveground, Exterior-Wall Penetrations: Seal penetrations using steel pipe sleeves and mechanical sleeve-seal systems. Size sleeves to allow for 1 inch annular clear space between pipe and sleeve for installing mechanical sleeve seals.

E. Underground, Exterior-Wall and Floor Penetrations:

1. Install steel pipe sleeves with integral waterstops. Size sleeves to allow for 1 inch annular clear space between raceway or cable and sleeve for installing sleeve-seal system. Install sleeve during construction of floor or wall.
2. Install steel pipe sleeves. Size sleeves to allow for 1 inch annular clear space between raceway or cable and sleeve for installing sleeve-seal system. Grout sleeve into wall or floor opening.

3.2 INSTALLATION OF RECTANGULAR SLEEVES AND SLEEVE SEALS

A. Install sleeves in existing walls without compromising structural integrity of walls. Do not cut structural elements without reinforcing the wall to maintain the designed weight bearing and wall stiffness.

B. Install conduits and cable with no crossings within the sleeve.

C. Fill opening around conduits and cables with expanding foam without leaving voids.

D. Provide metal sheet covering at both wall surfaces and finish to match surrounding surfaces. Metal sheet must be same material as sleeve.

3.3 INSTALLATION OF SLEEVE-SEAL SYSTEMS

A. Install sleeve-seal systems in sleeves in exterior concrete walls and slabs-on-grade at raceway entries into building.

B. Install type and number of sealing elements recommended by manufacturer for raceway or cable material and size. Position raceway or cable in center of sleeve. Assemble mechanical sleeve seals and install in annular space between raceway or cable and sleeve. Tighten bolts against pressure plates that cause sealing elements to expand and make watertight seal.

END OF SECTION 260544

SECTION 260553 - IDENTIFICATION FOR ELECTRICAL SYSTEMS

PART 1 - GENERAL

1.1 SUMMARY

A. Section Includes:

1. Labels.
2. Tapes and stencils.
3. Tags.
4. Signs.

1.2 ACTION SUBMITTALS

A. Product Data: For each type of product.

PART 2 - PRODUCTS

2.1 LABELS

A. Performance Criteria:

1. Regulatory Requirements: Listed and labeled in accordance with NFPA 70, by qualified electrical testing laboratory recognized by authorities having jurisdiction, and marked for intended location and application.
2. Listing Criteria: UL CCN PGDQ2 for components; including UL 969.

B. UL PGDQ2 - Self-Adhesive Wraparound Labels: Preprinted , 3 mil thick, polyester vinyl flexible label with acrylic pressure-sensitive adhesive.

1. Manufacturers: Subject to compliance with requirements, provide products by one of the following:
   a. A'n D Cable Products.
   b. Brady Corporation.
   c. Brother International Corporation.
   d. Ideal Industries, Inc.
   e. Panduit Corp.
2. Self-Lamination: Clear; UV-, weather-, and chemical-resistant; self-laminating, with protective shield over legend. Size labels such that clear shield overlaps entire printed legend.
3. Marker for Labels:
   a. Permanent, waterproof, black ink marker recommended by tag manufacturer.
   b. Machine-printed, permanent, waterproof, black ink recommended by printer manufacturer.

2.2 TAPES AND STENCILS

A. Floor Marking Tape: 2 inch wide, 5 mil pressure-sensitive vinyl tape, with yellow and black stripes and clear vinyl overlay.

1. Manufacturers: Subject to compliance with requirements, available manufacturers offering products that may be incorporated into the Work include, but are not limited to, the following:

a. Brady Corporation
b. Carlton Industries, LP
c. Seton Identification Products; a Brady Corporation company

B. Underground-Line Warning Tape:

1) Manufacturers: Subject to compliance with requirements, available manufacturers offering products that may be incorporated into the Work include, but are not limited to, the following:

a) Brady Corporation
b) Ideal Industries, Inc.
c) LEM Products Inc.
d) Marking Services Inc.
e) Pipemarker.com; Brimar Industries, Inc.
f) Reef Industries, Inc.
g) Seton Identification Products; a Brady Corporation company

2) Tape:

a) Recommended by manufacturer for method of installation and suitable to identify and locate underground electrical [**and communications**] utility lines.
b) Printing on tape must be permanent and may not be damaged by burial operations.
c) Tape material and ink must be chemically inert and not be subject to degradation when exposed to acids, alkalis, and other destructive substances commonly found in soils.

3) Color and Printing:

a) Comply with APWA Uniform Color Code using NEMA Z535.1 safety colors.
b) Inscriptions for Red Tapes: "CAUTION BURIED ELECTRIC LINE BELOW".
c) Inscriptions for Orange Tapes: "CAUTION BURIED FIBER OPTIC LINE BELOW" or "CAUTION BURIED COMMUNICATION LINE BELOW", as applicable.

4) Nonconducting Line-Warning Tape :

a) Pigmented polyolefin, bright colored, continuous-printed on one side with inscription of utility, compounded for direct-burial service.
b) Width: 3 inch.
c) Thickness: 4 mil.
d) Weight: 18.5 lb/1000 sq. ft.
e) Tensile in accordance with ASTM D882: 30 lbf and 2500 psi.

5) Reinforced Nonconducting Line-Warning Tape :

a) Multilayer laminate, consisting of high-density polyethylene scrim coated with pigmented polyolefin; bright colored, continuous-printed on one side with inscription of utility, compounded for direct-burial service.
b) Width: 3 inch.
c) Thickness: 12 mil.
d) Weight: 36.1 lb/1000 sq. ft.
e) Tensile in accordance with ASTM D882: 400 lbf and 11,500 psi.

6) Detectable Line-Warning Tape :

a) Detectable three-layer laminate, consisting of printed pigmented polyolefin film, solid aluminum-foil core, and clear protective film that allows inspection of continuity of conductive core; bright colored, continuous-printed on one side with inscription of utility, compounded for direct-burial service.
b) Width: 3 inch.
c) Overall Thickness: 5 mil.
d) Foil Core Thickness: 0.35 mil.
e) Weight: 28 lb/1000 sq. ft.
f) Tensile in accordance with ASTM D882: 70 lbf and 4600 psi.

7) Reinforced Detectable Line-Warning Tape :

a) Reinforced, detectable three-layer laminate, consisting of printed pigmented woven scrim, solid aluminum-foil core, and clear protective film that allows inspection of continuity of conductive core; bright-colored, continuous-printed on one side with inscription of utility, compounded for direct-burial service.
b) Width: 3 inch.
c) Overall Thickness: 8 mil.
d) Foil Core Thickness: 0.35 mil.
e) Weight: 34 lb/1000 sq. ft.
f) Tensile in accordance with ASTM D882: 300 lbf and 12,500 psi.

2.3 TAGS

A. Metal Tags: Brass or aluminum, 2 by 2 by 0.05 inch, with stamped legend, punched for use with self-locking cable tie fastener.

1. Manufacturers: Subject to compliance with requirements, provide products by one of the following:
   a. Brady Corporation.
   b. Carlton Industries, LP.
   c. emedco.
   d. Marking Services Inc.

B. Nonmetallic Preprinted Tags: Polyethylene tags, 0.015 inch thick, color-coded for phase and voltage level, with factory printed permanent designations; punched for use with self-locking cable tie fastener.

1. Manufacturers: Subject to compliance with requirements, provide products by one of the following:

a. Brady Corporation.
b. Carlton Industries, LP.
c. emedco.
d. Grafoplast Wire Markers.
e. LEM Products Inc.
f. Panduit Corp.
g. Seton Identification Products; a Brady Corporation company.

2.4 SIGNS

A. Baked-Enamel Signs:

1. Manufacturers: Subject to compliance with requirements, provide products by one of the following:
   a. Brady Corporation.
   b. Carlton Industries, LP.
   c. Champion America.
   d. emedco.
   e. Marking Services Inc.
2. Preprinted aluminum signs, punched or drilled for fasteners, with colors, legend, and size required for application.
3. 1/4 inch grommets in corners for mounting.
4. Nominal Size: 7 by 10 inch.

B. Laminated Acrylic or Melamine Plastic Signs:

1. Manufacturers: Subject to compliance with requirements, provide products by one of the following:
   a. Brady Corporation.
   b. Carlton Industries, LP.
   c. emedco.
   d. Marking Services Inc.
   e. Seton Identification Products; a Brady Corporation company.
2. Engraved legend.
3. Thickness:
   a. For signs up to 20 sq. inch, minimum 1/16 inch thick.
   b. For signs larger than 20 sq. inch, 1/8 inch thick.
   c. Engraved legend with black letters on white face .
   d. Punched or drilled for mechanical fasteners with 1/4 inch grommets in corners for mounting .
   e. Framed with mitered acrylic molding and arranged for attachment at applicable equipment.

PART 3 - EXECUTION

3.1 PREPARATION

A. Self-Adhesive Identification Products: Before applying electrical identification products, clean substrates of substances that could impair bond, using materials and methods recommended by manufacturer of identification product.

3.2 SELECTION OF COLORS AND IDENTIFICATION MARKINGS

A. Comply with 29 CFR 1910.144 for color identification of hazards, and the following:

1. Fire-protection and fire-alarm equipment , including raceways, must be finished, painted, or suitably marked safety red.
2. Ceiling-mounted hangers, supports, cable trays, and raceways must be finished, painted, or suitably marked safety yellow where less than 7.7 ft above finished floor.

B. Pipe and Conduit Labeling: Comply with ASME A13.1.

C. Color-Coding for Phase- and Voltage-Level Identification, 1000 V or Less: Use colors listed below for ungrounded feeder and branch-circuit conductors.

1. Color must be factory applied or field applied for sizes larger than 6 AWG when permitted by authorities having jurisdiction.
2. Colors for 208Y/120 V Circuits:
   a. Phase A: Black.
   b. Phase B: Red.
   c. Phase C: Blue.
3. Colors for 480Y/277 V Circuits:
   a. Phase A: Brown.
   b. Phase B: Orange.
   c. Phase C: Yellow.
4. Color for Neutral (Grounded Conductor): White .
5. Color for Equipment Ground: Green .

D. Color-Coding Instructional Signs: Self-adhesive labels, including color code for grounded and ungrounded conductors.

E. Accessible Fittings for Raceways: Identify cover of junction and pull box of the following systems with wiring system legend and system voltage. System legends must be as follows:

1. "POWER."

F. Identify conductors, cables, and terminals in enclosures and at junctions, terminals, pull points, and locations of high visibility. Identify by system and circuit designation.

G. Locations of Underground Lines: Underground-line warning tape for power and lighting.

H. Vaults, Manholes, Handholes, and Pull and Junction Boxes, 1000 V or Less: For conductors in vaults, pull and junction boxes, manholes, and handholes, use self-adhesive wraparound labels self-adhesive vinyl tape to identify phase.

1. Locate identification at changes in direction, at penetrations of walls and floors, at 50 ft maximum intervals in straight runs, and at 25 ft maximum intervals in congested areas.
2. Identify system voltage and system or service type with black letters on orange field.

I. Accessible Raceways and Metal-Clad Cables, 1000 V or Less, for Service, Feeder, and Branch Circuits, More Than 30 A and 120 V to Ground: Identify with self-adhesive raceway labels.

1. Locate identification at changes in direction, at penetrations of walls and floors, at 50 ft maximum intervals in straight runs, and at 25 ft maximum intervals in congested areas.

2. Identify system voltage and system or service type with black letters on orange field .

J. Conductors to Be Extended in Future: Attach marker tape to conductors and list source.

K. Cover Plates: Label individual cover plates with self-adhesive labels. Place label at top of cover plate. Label cover plate with the following information, in the order listed:

1. Panelboard designation.
2. Colon or dash.
3. Branch circuit number.

L. Workspace Indication: Apply floor marking tape to finished surfaces. Show working clearances in direction of access to live parts. Workspace must comply with NFPA 70 and 29 CFR 1926.403 unless otherwise indicated. Do not install at flush-mounted panelboards and similar equipment in finished spaces.

M. Equipment Identification Labels:

1. Black letters on white field.
2. Indoor Equipment: Baked-enamel signs Laminated acrylic or melamine plastic sign.
3. Equipment to Be Labeled:
   a. Racks, Frames, and Enclosures: Identify front and rear of each with self-adhesive labels containing equipment designation.
   b. Panelboards: Typewritten directory of circuits in location provided by panelboard manufacturer. Panelboard identification must be in form of self-adhesive, engraved, laminated acrylic or melamine label.
   c. Enclosures and electrical cabinets.
   d. Access doors and panels for concealed electrical items.
   e. Transformers: Label that includes tag designation indicated on Drawings for transformer, feeder, and panelboards or equipment supplied by secondary.
   f. Enclosed switches.

3.3 SELECTION OF SIGNS AND HAZARD MARKINGS

A. Signs, labels, and tags required for personnel safety must comply with the following standards:

1. Safety Colors: NEMA Z535.1.
2. Facility Safety Signs: NEMA Z535.2.
3. Safety Symbols: NEMA Z535.3.
4. Product Safety Signs and Labels: NEMA Z535.4.
5. Safety Tags and Barricade Tapes for Temporary Hazards: NEMA Z535.5.

B. Electrical Hazard Warnings:

1. Arc-Flash Hazard Warning: Self-adhesive labels. Comply with NFPA 70E and requirements for arc-flash hazard warning labels.
2. Multiple Power Sources Warning Legend: "DANGER - ELECTRICAL SHOCK HAZARD - EQUIPMENT HAS MULTIPLE POWER SOURCES."
3. OSHA Workspace Clearance Warning Legend: "WARNING - OSHA REGULATION - AREA IN FRONT OF ELECTRICAL EQUIPMENT MUST BE KEPT CLEAR FOR 3 FEET MINIMUM."

C. Warning Labels for Indoor Cabinets, Boxes, and Enclosures for Power and Lighting: Baked-enamel warning signs .

1. Apply to exterior of door, cover, or other access.
2. For equipment with multiple power or control sources, apply to door or cover of equipment, including, but not limited to, the following:
   a. Power-transfer switches.
   b. Controls with external control power connections.

D. Operating Instruction Signs: Baked-enamel warning signs Laminated acrylic or melamine plastic signs.

3.4 INSTALLATION

A. Install identification materials and devices at locations for most convenient viewing without interference with operation and maintenance of equipment. Install access doors or panels to provide view of identifying devices.

B. Fasteners for Labels and Signs: Self-tapping, stainless steel screws or stainless steel machine screws with nuts and flat and lock washers.

C. Verify and coordinate identification names, abbreviations, colors, and other features with requirements in other Sections requiring identification applications, Drawings, Shop Drawings, manufacturer's wiring diagrams, and operation and maintenance manual. Use consistent designations throughout Project.

D. Install identifying devices before installing acoustical ceilings and similar concealment.

E. Verify identity of item before installing identification products.

F. Coordinate identification with Project Drawings, manufacturer's wiring diagrams, and operation and maintenance manual.

G. Apply identification devices to surfaces that require finish after completing finish work.

H. Install signs with approved legend to facilitate proper identification, operation, and maintenance of electrical systems and connected items.

I. Elevated Components: Increase sizes of labels, signs, and letters to those appropriate for viewing from floor.

J. Snap-Around Labels: Secure tight to surface at location with high visibility and accessibility.

K. Self-Adhesive Wraparound Labels: Secure tight to surface at location with high visibility and accessibility.

L. Metal Tags:

1. Place in location with high visibility and accessibility.

M. Nonmetallic Preprinted Tags:

1. Place in location with high visibility and accessibility.

N. Baked-Enamel Signs: Attach signs that are not self-adhesive type with mechanical fasteners appropriate to location and substrate.

O. Laminated Acrylic or Melamine Plastic Signs: Attach signs that are not self-adhesive type with mechanical fasteners appropriate to location and substrate.

END OF SECTION 260553

SECTION 260923 - LIGHTING CONTROL DEVICES

1.1 PRODUCTS

A. Lighting Control Devices: Basis of design lighting control devices shall be provided in accordance with "Lighting Control Schedule" on contract drawings.

B. Shop Drawings:

1. Provide product data submittals on all items shown in "Lighting Control Schedule". Products included in submittal shall show the following devices as needed:
   a. Line Voltage (120V /277V) Wall Switch with Integral Occupancy/Vacancy Sensor.
   b. Line Voltage (120V /277V) Wall Switch with Integral Occupancy/Vacancy Sensor with 0-10V Dimming.
   c. Low Voltage Switches as shown in "Lighting Control Schedule". This include momentary contact switches, dimming switches, keyed switches, and scene control switches.
   d. Ceiling/Wall Mounted Occupancy/Vacancy Sensors
   e. Power Packs/Relay Packs/Room Controllers
   f. Outdoor Photocells
   g. Daylight Harvesting Sensors
   h. Any additional appurtenances required to provide a complete system.

C. Indoor Occupancy/Vacancy Sensors: All occupancy sensors provided as part of this project's scope shall comply with the following:

1. Sensors must be Dual Technology (Ultrasonic and Passive Infrared) unless otherwise necessary.
2. Power Pack, where required, must be provided as a separate assembly.

D. Commissioning: Contractor is responsible for providing commissioning services from the lighting control manufacturer. Lighting control shall be commissioned to meet all of the requirements of the New Jersey revisions of ASHREA 90.1. Commissioning shall be provided at not cost to the client.

END OF SECTION 260923

SECTION 262213 - LOW-VOLTAGE DISTRIBUTION TRANSFORMERS

PART 1 - GENERAL

1.1 SUMMARY

A. Section Includes:

1. Distribution, dry-type transformers with nominal primary and secondary rating of 600 V and less, with capacities up to 1500 kVA.

1.2 ACTION SUBMITTALS

A. Product Data:

1. For each type of product.
   a. Include construction details, material descriptions, dimensions of individual components and profiles, and finishes for each type and size of transformer.
   b. Include rated nameplate data, capacities, weights, dimensions, minimum clearances, installed devices and features, and performance for each type and size of transformer.

1.3 DELIVERY, STORAGE, AND HANDLING

A. Inspection: On receipt, inspect for and note shipping damage to packaging and transformer.

1. If manufacturer packaging is removed for inspection, and transformer will be stored after inspection, re-package transformer using original or new packaging materials that provide protection equivalent to manufacturer's packaging.

B. Storage: Store in warm, dry, and temperature-stable location in original shipping packaging.

C. Temporary Heating: Apply temporary heat in accordance with manufacturer's published instructions within enclosure of ventilated-type units, throughout periods during which equipment is not energized and when transformer is not in space that is continuously under normal control of temperature and humidity.

D. Handling: Follow manufacturer's instructions for lifting and transporting transformers.

PART 2 - PRODUCTS

2.1 MANUFACTURERS

A. <u>Manufacturers:</u> Subject to compliance with requirements, provide products by one of the following:

1. ABB, Electrification Business.

2. Acme Electric; brand of Hubbell Electrical Solutions; Hubbell Incorporated.
3. Eaton.
4. Hammond Power Solutions Inc.
5. Powersmiths International Corp.; Socomec Group.
6. Siemens Industry, Inc., Energy Management Division.
7. Square D; Schneider Electric USA.

2.2 GENERAL TRANSFORMER REQUIREMENTS

A. Description: Factory-assembled and -tested, air-cooled units for 60 Hz service.

B. Electrical Components, Devices, and Accessories: Listed and labeled in accordance with NFPA 70, by qualified electrical testing laboratory recognized by authorities having jurisdiction, and marked for intended location and application.

C. Transformers Rated 15 kVA and Larger:

1. Comply with 10 CFR 431 (DOE 2016) efficiency levels.
2. Marked as compliant with DOE 2016 efficiency levels by qualified electrical testing laboratory recognized by authorities having jurisdiction.

D. Shipping Restraints: Paint or otherwise color-code bolts, wedges, blocks, and other restraints that are to be removed after installation and before energizing. Use fluorescent colors that are easily identifiable inside transformer enclosure.

2.3 DISTRIBUTION TRANSFORMERS

A. Comply with NFPA 70, and list and label as complying with UL 1561.

B. Cores: Electrical grade, non-aging silicon steel with high permeability and low hysteresis losses.

1. One leg per phase.
2. Grounded to enclosure.

C. Coils: Continuous windings without splices except for taps.

1. Coil Material: Copper or Aluminum.
2. Internal Coil Connections: Brazed or pressure type.
3. Terminal Connections: Welded or Bolted.

D. Encapsulation: Transformers smaller than 30 kVA must have core and coils completely resin encapsulated.

E. Enclosure: Ventilated.

1. Core and coil must be encapsulated within resin compound using vacuum-pressure impregnation process to seal out moisture and air.
2. KVA Ratings: Based on convection cooling only and not relying on auxiliary fans.
3. Wiring Compartment: Sized for conduit entry and wiring installation.
4. Environmental Protection:
   a. Indoor: UL 50E, Type 2.

b. Outdoor: UL 50E, Type 3R.

5. Finish Color: Gray weather-resistant enamel.

F. Taps for Transformers 25 kVA and Larger: Two 2.5 percent taps above and two 2.5 percent taps below normal full capacity.

G. Insulation Class, 30 kVA and Larger: 220 deg C, UL-component-recognized insulation system with maximum of 150 deg C rise above 40 deg C ambient temperature.

H. Grounding: Provide ground-bar kit or ground bar installed on inside of transformer enclosure.

I. Wall Brackets: Manufacturer's standard brackets.

J. Low-Sound-Level Requirements: Maximum sound levels when factory tested in accordance with IEEE C57.12.91, as follows:

1. 30.01 to 50.00 kVA: 45 dB(A-weighted) for K-factors of 1, 4, and 9.
2. 50.01 to 150.00 kVA: 50 dB(A-weighted) for K-factors of 1, 4, and 9.

2.4 IDENTIFICATION

A. Nameplates:

1. Engraved, laminated-acrylic or melamine plastic signs for distribution transformers, mounted with corrosion-resistant screws. Nameplates and label products are specified in Section 260553 "Identification for Electrical Systems."

PART 3 - EXECUTION

3.1 EXAMINATION

A. Examine conditions for compliance with enclosure- and ambient-temperature requirements for transformers.

B. Verify that field measurements are as needed to maintain working clearances required by NFPA 70 and manufacturer's published instructions.

C. Examine walls, floors, roofs, and concrete bases for suitable mounting conditions where transformers will be installed.

D. Verify that ground connections are in place and requirements in Section 260526 "Grounding and Bonding for Electrical Systems" have been met.

E. Environment: Enclosures must be rated for environment in which they are located.

F. Proceed with installation only after unsatisfactory conditions have been corrected.

3.2 INSTALLATION

A. Install wall-mounted transformers level and plumb with wall brackets fabricated by transformer manufacturer.

1. Coordinate installation of wall-mounted and structure-hanging supports with actual transformer provided.

B. Secure transformer to associated base in accordance with manufacturer's published instructions.

C. Secure covers to enclosure and tighten bolts to manufacturer-recommended torques to reduce noise generation.

D. Remove shipping bolts, blocking, and wedges.

3.3 CONNECTIONS

A. Ground equipment in accordance with Section 260526 "Grounding and Bonding for Electrical Systems."

B. Connect wiring in accordance with Section 260519 "Low-Voltage Electrical Power Conductors and Cables."

C. Tighten electrical connectors and terminals in accordance with manufacturer's published torque-tightening values. If manufacturer's torque values are not indicated, use those specified in UL 486A-486B.

D. Provide flexible connections at conduit and conductor terminations and supports to eliminate sound and vibration transmission to building structure.

3.4 ADJUSTING

A. Record transformer secondary voltage at unit for at least 48 hours of typical occupancy period. Adjust transformer taps to provide optimum voltage conditions at secondary terminals. Optimum is defined as not exceeding nameplate voltage plus 5 percent and not being lower than nameplate voltage minus 3 percent at maximum load conditions. Submit recording and tap settings as test results.

B. Output Settings Report: Prepare written report recording output voltages and tap settings.

3.5 CLEANING

A. Vacuum dirt and debris; do not use compressed air to assist in cleaning.

3.6 MAINTENANCE

A. Infrared Scanning: Two months after Substantial Completion, perform infrared scan of transformer connections.

1. Use infrared-scanning device designed to measure temperature or detect significant deviations from normal values. Provide documentation of device calibration.
2. Perform two follow-up infrared scans of transformers, one at four months and another at 11 months after Substantial Completion.
3. Prepare certified report identifying transformer checked and describing results of scanning. Include notation of deficiencies detected, remedial actions taken, and scanning observations after remedial action.

END OF SECTION 262213

SECTION 262416 - PANELBOARDS

PART 1 - GENERAL

1.1 SUMMARY

A. Section Includes:

1. Panelboards.
2. Disconnecting and overcurrent protective devices.

B. Related Requirements:

1. Section 260010 "Supplemental Requirements for Electrical" specifies additional abbreviations, definitions, submittals, qualifications, testing agencies, and other requirements applicable to the Work for electrical, communications, and electronic safety and security systems on Project, including wiring methods.
2. Section 260529 "Hangers and Supports for Electrical Systems" specifies concrete bases and supports for panelboards installed by this Section.
3. Section 260553 "Identification for Electrical Systems" specifies electrical equipment labels and warning signs installed by this Section.
4. Section 262813 "Fuses" specifies fuses and spare-fuse cabinets installed by this Section.
5. Section 264313 "Surge Protective Devices for Low-Voltage Electrical Power Circuits" specifies Type 1 and Type 2 surge protective devices installed by this Section.

1.2 DEFINITIONS

A. GFEP: Ground-fault equipment protection.

B. MCCB: Molded-case circuit breaker.

C. VPR: Voltage protection rating.

1.3 ACTION SUBMITTALS

A. Product Data: For each type of product. In addition to information identified in Section 013300 "Submittal Procedures," submit the following:

1. Product Listing: Include copy of unexpired approval letter, on letterhead of qualified electrical testing agency, certifying product's compliance with specified listing criteria.
2. Include manufacturer's sample extended warranty language.

B. Shop Drawings: For each panelboard and related equipment:

1. Include dimensioned plans, elevations, sections, and details.
2. Show tabulations of installed devices with nameplates, conductor termination sizes, equipment features, and ratings.
3. Detail enclosure types including mounting and anchorage, environmental protection, knockouts, corner treatments, covers and doors, gaskets, hinges, and locks.

4. Detail bus configuration, current, and voltage ratings.
5. Short-circuit current rating of panelboards and overcurrent protective devices.
6. Include evidence of listing, by qualified electrical testing laboratory recognized by authorities having jurisdiction, for series rating of installed devices.
7. Include evidence of listing, by qualified electrical testing laboratory recognized by authorities having jurisdiction, for SPD as installed in panelboard.
8. Detail features, characteristics, ratings, and factory settings of individual overcurrent protective devices and auxiliary components.
9. Include wiring diagrams for power, signal, and control wiring.
10. Include time-current coordination curves for each type and rating of overcurrent protective device included in panelboards. Submit on translucent log-log graft paper; include selectable ranges for each type of overcurrent protective device. Include Internet link for electronic access to downloadable PDF of coordination curves.

C. Field quality-control reports.

1. Test procedures used.
2. Test results that comply with requirements.
3. Results of failed tests and corrective action taken to achieve test results that comply with requirements.

1.4 INFORMATIONAL SUBMITTALS

A. Panelboard Schedules: For installation in panelboards. Submit final versions after load balancing.

B. Operation and Maintenance Data: For panelboards and components to include in emergency, operation, and maintenance manuals. In addition to items specified in Division 01 Section "Operation and Maintenance Data," include the following:

1. Manufacturer's written instructions for testing and adjusting overcurrent protective devices.

1.5 QUALITY ASSURANCE

A. Source Limitations: Obtain panelboards, overcurrent protective devices, components, and accessories from single source from single manufacturer.

B. Product Selection for Restricted Space: Drawings indicate maximum dimensions for panelboards including clearances between panelboards and adjacent surfaces and other items. Comply with indicated maximum dimensions.

C. Electrical Components, Devices, and Accessories: Listed and labeled as defined in NFPA 70, by a qualified testing agency, and marked for intended location and application.

D. Comply with NEMA PB 1.

E. Comply with NFPA 70.

1.6 CLOSEOUT SUBMITTALS

A. Warranty documentation.

1.7 DELIVERY, STORAGE, AND HANDLING

A. Remove loose packing and flammable materials from inside panelboards; install temporary electric heating (250 W per panelboard) to prevent condensation.

B. Handle and prepare panelboards for installation in accordance with NEMA PB 1.

1.8 WARRANTY

A. Special Installer Extended Warranty: Installer warrants that fabricated and installed panelboards perform in accordance with specified requirements and agrees to repair or replace components or products that fail to perform as specified within extended-warranty period.

1. Extended-Warranty Period: Two years from date of Substantial Completion; full coverage for labor, materials, and equipment.

PART 2 - PRODUCTS

2.1 PERFORMANCE REQUIREMENTS

A. Product Selection for Restricted Space: Drawings indicate maximum dimensions for panelboards including clearances between panelboards and adjacent surfaces and other items. Comply with indicated maximum dimensions.

B. Electrical Components, Devices, and Accessories: Listed and labeled in accordance with NFPA 70, by qualified electrical testing agency recognized by authorities having jurisdiction, and marked for intended location and application.

C. Comply with NEMA PB 1 & with NFPA 70.

D. Enclosures: Flush and Surface-mounted, dead-front cabinets.

1. Rated for environmental conditions at installed location.

a. Indoor Dry and Clean Locations: UL 50E, Type 1.
b. Outdoor Locations: UL 50E, Type 3R.
c. Indoor Locations Subject to Dust, Falling Dirt, and Dripping Noncorrosive Liquids: UL 50E.

2. Height: 7 ft maximum.
3. Front: Secured to box with concealed trim clamps. For surface-mounted fronts, match box dimensions; for flush-mounted fronts, overlap box. Trims must cover live parts and may have no exposed hardware.
4. Hinged Front Cover: Entire front trim hinged to box and with standard door within hinged trim cover. Trims must cover live parts and may have no exposed hardware.
5. Finishes:

a. Panels and Trim: Steel factory finished immediately after cleaning and pretreating with manufacturer's standard two-coat, baked-on finish consisting of prime coat and thermosetting topcoat.
b. Back Boxes: Same finish as panels and trim.

E. Incoming Mains:

1. Location: Top or Bottom .
2. Main Breaker: Main lug interiors up to 400 A must be field convertible to main breaker.

F. Phase, Neutral, and Ground Buses:

1. Material: Tin-plated aluminum or Hard-drawn copper, 98 percent conductivity.
   a. Plating must run entire length of bus.
   b. Bus must be fully rated for entire length.
2. Interiors must be factory assembled into unit. Replacing switching and protective devices may not disturb adjacent units or require removing main bus connectors.
3. Equipment Ground Bus: Adequate for feeder and branch-circuit equipment grounding conductors; bonded to box.
4. Full-Sized Neutral: Equipped with full-capacity bonding strap for service entrance applications. Mount electrically isolated from enclosure.
5. Do not mount neutral bus in gutter.

G. Conductor Connectors: Suitable for use with conductor material and sizes.

1. Material: Tin-plated aluminum or Hard-drawn copper, 98 percent conductivity.
2. Terminations must allow use of 75 deg C rated conductors without derating.
3. Size: Lugs suitable for indicated conductor sizes, with additional gutter space, if required, for larger conductors.
4. Main and Neutral Lugs: Mechanical type, with lug on neutral bar for each pole in panelboard.
5. Ground Lugs and Bus-Configured Terminators: Mechanical type, with lug on bar for each pole in panelboard.

H. Quality-Control Label: Panelboards or load centers must be labeled, by qualified electrical testing laboratory recognized by authorities having jurisdiction, for use as service equipment with one or more main service disconnecting and overcurrent protective devices. Panelboards or load centers must have meter enclosures, wiring, connections, and other provisions for utility metering. Coordinate with utility company for exact requirements.

I. Future Devices: Panelboards or load centers must have mounting brackets, bus connections, filler plates, and necessary appurtenances required for future installation of devices.

1. Percentage of Future Space Capacity: 20 percent or as per the Panel Schedules shown on the electrical drawings.

J. Panelboard Short-Circuit Current Rating:

1. Fully rated to interrupt symmetrical short-circuit current available at terminals. Assembly listed, by qualified electrical testing laboratory recognized by authorities having jurisdiction, for 100 percent interrupting capacity.

a. Panelboards and overcurrent protective devices rated 240 V or less must have short-circuit ratings as shown on Drawings, but not less than 10 000 A(rms) symmetrical.
b. Panelboards and overcurrent protective devices rated above 240 V and less than 600 V must have short-circuit ratings as shown on Drawings, but not less than 14 000 A(rms) symmetrical.

K. Surge Suppression (where indicated on the electrical drawings): Factory installed as integral part of indicated panelboards, complying with UL 1449 SPD Type 2 and Section 264313 "Surge Protective Devices for Low-Voltage Electrical Power Circuits".

2.2 PANELBOARDS

A. Manufacturers: Subject to compliance with requirements, provide products by one of the following:

1. ABB, Electrification Business.
2. Eaton.
3. Siemens Industry, Inc., Energy Management Division.
4. Square D; Schneider Electric USA.

B. Listing Criteria: Investigated, labeled, and marked by qualified electrical testing laboratory in accordance with guide information and standards specified for the following UL product categories as applicable:

1. Lighting and Appliance Branch-Circuit Type Panelboards: UL CCN QEUY; including UL 67 and NEMA PB 1.
2. Distribution Type Panelboards: UL CCN QEUY; including UL 67 and NEMA PB 1.

C. Mains: Circuit breaker or lugs only; refer to electrical drawings.

D. Branch Overcurrent Protective Devices: Plug-in Bolt-on circuit breakers, replaceable without disturbing adjacent units.

E. Surge Suppression: Factory installed as integral part of indicated panelboards, complying with UL 1449 SPD Type 2.

2.3 DISCONNECTING AND OVERCURRENT PROTECTIVE DEVICES

A. Manufacturers: Subject to compliance with requirements, provide products by one of the following:

1. ABB, Electrification Business.
2. Eaton.
3. Siemens Industry, Inc., Energy Management Division.
4. Square D; Schneider Electric USA.

B. MCCB: Comply with UL 489, with interrupting capacity to meet available fault currents.

1. Thermal-Magnetic Circuit Breakers:

a. Inverse time-current element for low-level overloads.

b. Instantaneous magnetic trip element for short circuits.
c. Adjustable magnetic trip setting for circuit-breaker frame sizes 250 A and larger.

2. Adjustable Instantaneous-Trip Circuit Breakers: Magnetic trip element with front-mounted, field-adjustable trip setting.
3. GFCI Circuit Breakers: Single- and double-pole configurations with Class A ground-fault protection (6 mA trip).
4. GFPE Circuit Breakers: Class B ground-fault protection (30 mA trip).
5. Subfeed Circuit Breakers: Vertically mounted.
6. MCCB Features and Accessories:
   a. Standard frame sizes, trip ratings, and number of poles.
   b. Breaker handle indicates tripped status.
   c. UL listed for reverse connection without restrictive line or load ratings.
   d. Lugs: Mechanical style, suitable for number, size, trip ratings, and conductor materials.
   e. Handle Padlocking Device: Fixed attachment, for locking circuit-breaker handle in on or off position.
   f. Handle Clamp: Loose attachment, for holding circuit-breaker handle in on position.

C. Fused Switch: NEMA KS 1, Type HD; clips to accommodate specified fuses; lockable handle.

1. Provide fuses and spare fuse cabinet.
2. Fused Switch Features and Accessories:

   a. Standard ampere ratings and number of poles.
   b. Mechanical cover interlock with manual interlock override, to prevent opening of cover when switch is in on position. Interlock must prevent switch from being turned on with cover open. Operating handle must have lock-off means with provisions for three padlocks.

PART 3 - EXECUTION

3.1 EXAMINATION

A. Verify actual conditions with field measurements prior to ordering panelboards to verify that equipment fits in allocated space in, and comply with, minimum required clearances specified in NFPA 70.

B. Receive, inspect, handle, and store panelboards in accordance with NEMA PB 1.1.

C. Examine panelboards before installation. Reject panelboards that are damaged, rusted, or have been subjected to water saturation.

D. Examine elements and surfaces to receive panelboards for compliance with installation tolerances and other conditions affecting performance of the Work.

E. Proceed with installation only after unsatisfactory conditions have been corrected.

3.2 INSTALLATION

A. Comply with manufacturer's published instructions.

B. Reference Standards:

1. Panelboards: Unless more stringent requirements are specified in Contract Documents or manufacturers' published instructions, comply with NEMA PB 1.1.
2. Consult Architect for resolution of conflicting requirements.

C. Special Techniques:

1. Equipment Mounting:
   a. Attach panelboard to vertical finished or structural surface behind panelboard.
   b. Mount surface-mounted panelboards to steel slotted supports 5/8 inch in depth. Orient steel slotted supports vertically.
2. Mount panelboard cabinet plumb and rigid without distortion of box.
3. Mount recessed panelboards with fronts uniformly flush with wall finish and mating with back box.
4. Install overcurrent protective devices and controllers not already factory installed.
   a. Tighten bolted connections and circuit breaker connections using calibrated torque wrench or torque screwdriver in accordance with manufacturer's published instructions.
5. Make grounding connections and bond neutral for services and separately derived systems to ground. Make connections to grounding electrodes, separate grounds for isolated ground bars, and connections to separate ground bars.
6. Install filler plates in unused spaces.
7. Arrange conductors in gutters into groups and bundle and wrap with wire ties after completing load balancing.
8. Mount spare fuse cabinet in accessible location.

D. Interfaces with Other Work:

1. Coordinate layout and installation of panelboards and components with other construction that penetrates walls or is supported by them, including electrical and other types of equipment, raceways, piping, encumbrances to workspace clearance requirements, and adjacent surfaces. Maintain required workspace clearances and required clearances for equipment access doors and panels.

3.3 IDENTIFICATION

A. Identify field-installed conductors, interconnecting wiring, and components; install warning signs complying with requirements in Section 260553 "Identification for Electrical Systems."

B. Panelboard Nameplates: Label each panelboard with nameplate complying with requirements for identification specified in Section 260553 "Identification for Electrical Systems."

C. Device Nameplates: Label each branch circuit device in power panelboards with nameplate complying with requirements for identification specified in Section 260553 "Identification for Electrical Systems."

D. Install warning signs complying with requirements in Section 260553 "Identification for Electrical Systems" identifying source of remote circuit.

E. Panelboard Label: Manufacturer's name and trademark, voltage, amperage, number of phases, and number of poles must be located on interior of panelboard door.

F. Breaker Labels: Faceplate must list current rating, UL and IEC certification standards, and AIC rating.

G. Circuit Directory:

1. Provide directory card inside panelboard door, mounted in transparent card holder.
   a. Circuit directory must identify specific purpose with detail sufficient to distinguish it from other circuits.
2. Provide computer-generated circuit directory mounted inside panelboard door with transparent plastic protective cover.
   a. Circuit directory must identify specific purpose with detail sufficient to distinguish it from other circuits.
3. Create directory to indicate installed circuit loads after balancing panelboard loads; incorporate Owner's final room designations. Obtain approval before installing. Handwritten directories are not acceptable. Install directory inside panelboard door.

3.4 FIELD QUALITY CONTROL

A. Perform tests and inspections.

1. Manufacturer's Field Service: Engage a factory-authorized service representative to inspect components, assemblies, and equipment installations, including connections, and to assist in testing of surge suppressors and other electronic devices with adjustment capabilities.

B. Acceptance Testing Preparation:

1. Test insulation resistance for each panelboard bus, component, connecting supply, feeder, and control circuit.

2. Perform each visual and mechanical inspection and electrical test stated in NETA Acceptance Testing Specification. Certify compliance with test parameters.
3. Correct malfunctioning units on-site, where possible, and retest to demonstrate compliance; otherwise, replace with new units and retest.

C. Panelboards will be considered defective if they do not pass tests and inspections.

D. Prepare test and inspection reports, including a certified report that identifies panelboards included and that describes scanning results. Include notation of deficiencies detected, remedial action taken, and observations after remedial action.

3.5 ADJUSTING

A. Adjust moving parts and operable components to function smoothly, and lubricate as recommended by manufacturer.

B. Load Balancing: After Substantial Completion, but not more than 60 days after Final Acceptance, measure load balancing and make circuit changes. Prior to making circuit changes to achieve load balancing, inform Architect of effect on phase color coding.

1. Measure loads during period of normal facility operations.
2. Perform circuit changes to achieve load balancing outside normal facility operation schedule or at times directed by Architect. Avoid disrupting services such as fax machines and on-line data processing, computing, transmitting, and receiving equipment.
3. After changing circuits to achieve load balancing, recheck loads during normal facility operations. Record load readings before and after changing circuits to achieve load balancing.
4. Tolerance: Maximum difference between phase loads, within panelboard, may not exceed 20 percent.

3.6 PROTECTION

A. Temporary Heating: Prior to energizing panelboards, apply temporary heat to maintain temperature in accordance with manufacturer's published instructions.

END OF SECTION 262416

SECTION 262726 - WIRING DEVICES

PART 1 - GENERAL

1.1 SUMMARY

A. Section Includes:

1. General-use switches
2. General-grade duplex straight-blade receptacles.
3. Receptacles with ground-fault protective devices.

1.2 ACTION SUBMITTALS

A. Product Data:

1. General-use switches, dimmer switches, and fan-speed controller switches.
2. General-grade duplex straight-blade receptacles.
3. Receptacles with ground-fault protective devices.

PART 2 - PRODUCTS

2.1 GENERAL-USE SWITCHES

A. Toggle Switch:

1. Manufacturers: Subject to compliance with requirements, provide products by one of the following:
   a. Arrow Hart, Wiring Devices; Eaton, Electrical Sector.
   b. Hubbell Wiring Device-Kellems; brand of Hubbell Electrical Solutions; Hubbell Incorporated.
   c. Leviton Manufacturing Co., Inc.
   d. Pass & Seymour; Legrand North America, LLC.
2. Regulatory Requirements:
   a. Listed and labeled in accordance with NFPA 70, by qualified electrical testing laboratory recognized by authorities having jurisdiction, and marked for intended location and application.
3. General Characteristics:
   a. Reference Standards: UL CCN WMUZ and UL 20.
4. Options:
   a. Device Color: White.
   b. Configuration:
      1) General-duty, 120-277 V, 20 A, single pole or double pole.
5. Accessories:
   a. Cover Plate: 0.060 inch thick, high-impact thermoplastic (nylon) with smooth finish and color matching wiring device; from same manufacturer as wiring device.
   b. Securing Screws for Cover Plate: Metal with head color matching wallplate finish.

2.2 GENERAL-GRADE DUPLEX STRAIGHT-BLADE RECEPTACLES

A. Tamper-Resistant Duplex Straight-Blade Receptacle:

1. Manufacturers: Subject to compliance with requirements, provide products by one of the following:
   a. Arrow Hart, Wiring Devices; Eaton, Electrical Sector.
   b. Hubbell Wiring Device-Kellems; brand of Hubbell Electrical Solutions; Hubbell Incorporated.
   c. Leviton Manufacturing Co., Inc.
   d. Pass & Seymour; Legrand North America, LLC.
2. Regulatory Requirements:
   a. Listed and labeled in accordance with NFPA 70, by qualified electrical testing laboratory recognized by authorities having jurisdiction, and marked for intended location and application.
3. General Characteristics:
   a. Reference Standards: UL CCN RTRT and UL 498.
4. Options:
   a. Device Color: White.
   b. Configuration:
      1) General-duty, NEMA 5-20R.
5. Accessories:
   a. Cover Plate: 0.060 inch thick, high-impact thermoplastic (nylon) with smooth finish and color matching wiring device; from same manufacturer as wiring device.
   b. Securing Screws for Cover Plate: Metal with head color matching wallplate finish.

2.3 RECEPTACLES WITH GROUND-FAULT PROTECTIVE DEVICES

A. General-Grade, Weather-Resistant, Tamper-Resistant Duplex Straight-Blade Receptacle with GFCI Device:

1. Manufacturers: Subject to compliance with requirements, provide products by one of the following:
   a. Arrow Hart, Wiring Devices; Eaton, Electrical Sector.
   b. Hubbell Wiring Device-Kellems; brand of Hubbell Electrical Solutions; Hubbell Incorporated.
   c. Leviton Manufacturing Co., Inc.
   d. Pass & Seymour; Legrand North America, LLC.
2. Regulatory Requirements:
   a. Listed and labeled in accordance with NFPA 70, by qualified electrical testing laboratory recognized by authorities having jurisdiction, and marked for intended location and application.
3. General Characteristics:
   a. Reference Standards: UL CCN KCXS, UL 498, and UL 943.
4. Options:
   a. Device Color: White.
   b. Configuration: Heavy-duty, NEMA 5-20R.
5. Accessories:
   a. Cover Plate: 0.060 inch thick, high-impact thermoplastic (nylon) with smooth finish and color matching wiring device; from same manufacturer as wiring device.
   b. Securing Screws for Cover Plate: Metal with head color matching wallplate finish.

PART 3 - EXECUTION

3.1 EXAMINATION

A. Receptacles:

1. Verify that receptacles to be procured and installed for Owner-furnished equipment are compatible with mating attachment plugs on equipment.

3.2 INSTALLATION OF SWITCHES

A. Comply with manufacturer's instructions.

B. Reference Standards:

1. Unless more stringent requirements are specified in Contract Documents or manufacturers' instructions, comply with installation instructions in NECA NEIS 130.
2. Mounting Heights: Unless otherwise indicated in Contract Documents, comply with mounting heights recommended in NECA NEIS 1.
3. Consult Architect for resolution of conflicting requirements.

C. Identification:

1. Identify cover or cover plate for device with panelboard identification and circuit number in accordance with Section 260553 "Identification for Electrical Systems."
   a. Mark cover or cover plate using hot, stamped, or engraved machine printing with black - filled lettering, and provide durable wire markers or tags inside device box or outlet box.

3.3 PROTECTION

A. Devices:

1. Schedule and sequence installation to minimize risk of contamination of wires and cables, devices, device boxes, outlet boxes, covers, and cover plates by plaster, drywall joint compound, mortar, cement, concrete, dust, paint, and other materials.
2. After installation, protect wires and cables, devices, device boxes, outlet boxes, covers, and cover plates from construction activities. Remove and replace items that are contaminated, defaced, damaged, or otherwise caused to be unfit for use prior to acceptance by Owner.

END OF SECTION 262726

SECTION 262813 - FUSES

PART 1 - GENERAL

1.1 SUMMARY

A. Section Includes:

1. Nonrenewable cartridge fuses.
2. Spare-fuse cabinets.

B. Related Requirements:

1. Section 260010 "Supplemental Requirements for Electrical" specifies additional requirements applicable to coordinating, scheduling, and sequencing of the Work specified in this Section.
2. Section 260553 "Identification for Electrical Systems" specifies electrical equipment labels and warning signs referenced by this Section.

1.2 ACTION SUBMITTALS

A. Product Data: For each type of product. Include the following for each fuse type indicated:

1. Dimensions and manufacturer's technical data on features, performance, electrical characteristics, and ratings.

1.3 MAINTENANCE MATERIAL SUBMITTALS

A. Extra stock material.

1.4 FIELD CONDITIONS

A. Where ambient temperature to which fuses are directly exposed is less than 40 deg F or more than 100 deg F, apply manufacturer's ambient temperature adjustment factors to fuse ratings.

PART 2 - PRODUCTS

2.1 PERFORMANCE REQUIREMENTS

A. Regulatory Requirements: Products or components listed and labeled in accordance with NFPA 70, by a qualified electrical testing laboratory recognized by authorities having jurisdiction and marked for intended location and application.

2.2 NONRENEWABLE CARTRIDGE FUSES

A. Class RK1 Nonrenewable Cartridge Fuse:

1. Manufacturers: Subject to compliance with requirements, provide products by one of the following:

   a. Bussmann, an Eaton business
   b. Edison; a brand of Bussmann by Eaton
   c. Littelfuse, Inc.
   d. Mersen USA

2. Source Limitations: Obtain products from single manufacturer.
3. Listing Criteria: Investigated, labeled, and marked by a qualified electrical testing laboratory in accordance with guide information and standards specified for the following UL product categories:

   a. Cartridge Fuses, Nonrenewable: UL CCN JDDZ, including UL 248-1 and UL 248-12 (Class R).

4. Standard Features:

   a. NEMA FU 1, Class RK1, 200 kA(sym) interrupt rating, current limiting, sizes up to 600 A, 250 V(ac), 8 to 10 s minimum time-delay at 500 percent, with rejection feature.

      1) Select ferrule terminals or knife blade terminals to match equipment where fuse is installed.

2.3 SPARE-FUSE CABINET

A. Characteristics: Wall-mounted steel unit with full-length, recessed piano-hinged door and key-coded cam lock and pull.

1. Size: Adequate for storage of spare fuses specified with 100 percent spare capacity minimum.
2. Finish: Gray, baked enamel.
3. Fuse Pullers: For each size of fuse, where applicable and available, from fuse manufacturer.

2.4 MAINTENANCE MATERIAL ITEMS

A. Extra Stock Material: Furnish to Owner extra materials, from same production run, that match products installed and that are packaged with protective covering for storage and identified with labels describing contents. Include the following:

1. Fuses: Equal to 100 percent of quantity installed for each size and type, but no fewer than three of each size and type, per fusible disconnect switch.

PART 3 - EXECUTION

3.1 EXAMINATION

A. Examine fuses before installation. Reject fuses that are moisture damaged or physically damaged.

B. Examine holders to receive fuses for compliance with installation tolerances and other conditions affecting performance, such as rejection features.

C. Examine utilization equipment nameplates and installation instructions. Install fuses of sizes and with characteristics appropriate for each piece of equipment.

D. Evaluate ambient temperatures to determine if fuse rating adjustment factors must be applied to fuse ratings.

E. Proceed with installation only after unsatisfactory conditions have been corrected.

3.2 INSTALLATION OF FUSES

A. Comply with manufacturer's published instructions.

B. Reference Standards for Installation: Unless more stringent installation requirements are specified in the Contract Documents or manufacturer's published instructions, comply with the following:

1. Electrical Construction: ICC IBC, ICC IFC, NFPA 1, NFPA 70, and NECA NEIS 1.
2. Electrical Maintenance: NFPA 70B.
3. Electrical Safety: NFPA 70E.
4. Work in Confined Spaces: NFPA 350.
5. Work in Basements and Other Developed Subterranean Spaces: NFPA 520.
6. Fuse Applications: NECA NEIS 420.

C. Install fuses in fusible devices. Arrange fuses so rating information is readable without removing fuse.

D. Install spare-fuse cabinet(s) in location indicated on the Drawings or as indicated in the field by Owner.

E. Interfaces with Other Work:

1. Identification: Provide labels for spare fuse cabinet.

   a. Legend: "SPARE FUSES" in 1-1/2 inch high letters on exterior of door.

2. Coordinate fuse ratings with utilization equipment nameplate limitations of maximum fuse size and with results of coordination study and arc-flash hazard analysis.

END OF SECTION 262813

SECTION 262816 - ENCLOSED SWITCHES AND CIRCUIT BREAKERS

PART 1 - GENERAL

1.1 RELATED DOCUMENTS

A. Drawings and general provisions of the Contract, including General and Supplementary Conditions and other Division 01 Specification Sections, apply to this Section.

1.2 SUMMARY

A. Section Includes:

1. Fusible switches
2. Nonfusible switches
3. Shunt Trip Switches
4. Molded-case circuit breakers
5. Enclosures

1.3 SUBMITTALS

A. Product Data: For each type of enclosed switch, circuit breaker, accessory, and component indicated. Include dimensioned elevations, sections, weights, and manufacturers' technical data on features, performance, electrical characteristics, ratings, accessories, and finishes.

1. Enclosure types and details for types other than NEMA 250, Type 1.
2. Current and voltage ratings.
3. Short-circuit current ratings (interrupting and withstand, as appropriate).
4. Include evidence of NRTL listing for series rating of installed devices.
5. Detail features, characteristics, ratings, and factory settings of individual overcurrent protective devices, accessories, and auxiliary components.
6. Include time-current coordination curves (average melt) for each type and rating of overcurrent protective device; include selectable ranges for each type of overcurrent protective device. Submit on translucent log-log graph paper.

B. Shop Drawings: For enclosed switches and circuit breakers. Include plans, elevations, sections, details, and attachments to other work.

1. Wiring Diagrams: For power, signal, and control wiring.

C. Qualification Data: For qualified testing agency.

D. Field quality-control reports.

1. Test procedures used.
2. Test results that comply with requirements.
3. Results of failed tests and corrective action taken to achieve test results that comply with requirements.

E. Manufacturer's field service report.

F. Operation and Maintenance Data: For enclosed switches and circuit breakers to include in emergency, operation, and maintenance manuals. In addition to items specified in Division 01 Section "Operation and Maintenance Data," include the following:

1. Manufacturer's written instructions for testing and adjusting enclosed switches and circuit breakers.
2. Time-current coordination curves (average melt) for each type and rating of overcurrent protective device; include selectable ranges for each type of overcurrent protective device. Submit on translucent log-log graph paper.

1.4 QUALITY ASSURANCE

A. Source Limitations: Obtain enclosed switches and circuit breakers, overcurrent protective devices, components, and accessories, within same product category, from single source from single manufacturer.

B. Product Selection for Restricted Space: Drawings indicate maximum dimensions for enclosed switches and circuit breakers, including clearances between enclosures, and adjacent surfaces and other items. Comply with indicated maximum dimensions.

C. Electrical Components, Devices, and Accessories: Listed and labeled as defined in NFPA 70, by a qualified testing agency, and marked for intended location and application.

D. Comply with NFPA 70.

1.5 PROJECT CONDITIONS

A. Environmental Limitations: Rate equipment for continuous operation under the following conditions unless otherwise indicated:

1. Ambient Temperature: Not less than minus 22 deg F and not exceeding 104 deg F.
2. Altitude: Not exceeding 6600 feet.

B. Interruption of Existing Electric Service: Do not interrupt electric service to facilities occupied by Owner or others unless permitted under the following conditions and then only after arranging to provide temporary electric service according to requirements indicated:

1. Notify Architect, Construction Manager and Owner no fewer than seven days in advance of proposed interruption of electric service.
2. Indicate method of providing temporary electric service.
3. Do not proceed with interruption of electric service without Project Manager's written permission.
4. Comply with NFPA 70E.

1.6 COORDINATION

A. Coordinate layout and installation of switches, circuit breakers, and components with equipment served and adjacent surfaces. Maintain required workspace clearances and required clearances for equipment access doors and panels.

B. Submit drawings showing the location of electrical equipment supplied as part of this specification section that requires work space clearance in accordance with NFPA 70 Article 110 Part II. Work space clearance, including height, shall be indicated on the drawing, indicating where other trades are restricted from locating equipment, ductwork or piping. These drawings shall be coordinated with the other trades through the General Contractor. Any changes to these drawings during the course of the construction shall be coordinated with all trades through the General Contractor prior to installing the equipment. Changes required by other trades as a result of lack of coordination through the General Contractor shall be borne by the Electrical Contractor.

1.7 EXTRA MATERIALS

A. Furnish extra materials that match products installed and that are packaged with protective covering for storage and identified with labels describing contents.

1. Fuses: Equal to 10 percent of quantity installed for each size and type, but no fewer than three of each size and type.
2. Fuse Pullers: Two for each size and type.

PART 2 - PRODUCTS

2.1 FUSIBLE SWITCHES

A. Manufacturers: Subject to compliance with requirements, provide products by one of the following: Specific fuse types noted on the drawings shall override general requirements of Division 26 section “FUSES.”

1. Eaton Electrical Inc.; Cutler-Hammer Business Unit.
2. General Electric Company; GE Consumer & Industrial - Electrical Distribution.
3. Siemens Energy & Automation, Inc.
4. Square D; a brand of Schneider Electric.
5. Or Approved Equal.

B. Type HD, Heavy Duty, Single Throw, 240 and 600-V ac, 1200 A and Smaller: UL 98 and NEMA KS 1, horsepower rated, with clips or bolt pads to accommodate specified fuses, lockable handle with capability to accept three padlocks, and interlocked with cover in closed position.

C. Accessories:

1. Equipment Ground Kit: Internally mounted and labeled for copper and aluminum ground conductors.
2. Class R Fuse Kit: Provides rejection of other fuse types when Class R fuses are specified.

3. Lugs: Mechanical type, suitable for number, size, and conductor material.
4. Service-Rated Switches: Labeled for use as service equipment.

2.2 NONFUSIBLE SWITCHES

A. Manufacturers: Subject to compliance with requirements, provide products by one of the following:

1. Eaton Electrical Inc.; Cutler-Hammer Business Unit.
2. General Electric Company; GE Consumer & Industrial - Electrical Distribution.
3. Siemens Energy & Automation, Inc.
4. Square D; a brand of Schneider Electric.
5. Or Approved Equal.

B. Type HD, Heavy Duty, Single Throw, 600-V ac, 1200 A and Smaller: UL 98 and NEMA KS 1, horsepower rated, lockable handle with capability to accept three padlocks, and interlocked with cover in closed position.

C. Accessories:

1. Equipment Ground Kit: Internally mounted and labeled for copper and aluminum ground conductors.
2. Lugs: Mechanical type, suitable for number, size, and conductor material.

2.3 SHUNT TRIP SWITCHES

A. Manufacturers: Subject to compliance with requirements, provide products by one of the following:

1. Cooper Bussmann, Inc.
2. Ferraz Shawmut, Inc.
3. Littelfuse, Inc.
4. Or Approved Equal.

B. General Requirements: Comply with ASME A17.1, UL 50, and UL 98, with 200-kA interrupting and short-circuit current rating when fitted with Class J fuses.

C. Switches: Three-pole, horsepower rated, with integral shunt trip mechanism and Class J fuse block; lockable handle with capability to accept three padlocks; interlocked with cover in closed position.

D. Control Circuit: 120-V ac; obtained from integral control power transformer, with primary and secondary fuses, with a control power transformer of enough capacity to operate shunt trip, connected pilot, and indicating and control devices.

E. Accessories:

1. Oiltight key switch for key-to-test function.
2. Oiltight green ON pilot light.
3. Mechanically interlocked auxiliary contacts that change state when switch is opened and closed.

4. Form C alarm contacts that change state when switch is tripped.
5. Three-pole, double-throw, fire-safety and alarm relay; 24-V dc coil voltage.
6. Three-pole, double-throw, fire-alarm voltage monitoring relay complying with NFPA 72.

2.4 MOLDED-CASE CIRCUIT BREAKERS

A. Manufacturers: Subject to compliance with requirements, provide products by one of the following:

1. Eaton Electrical Inc.; Cutler-Hammer Business Unit.
2. General Electric Company; GE Consumer & Industrial - Electrical Distribution.
3. Siemens Energy & Automation, Inc.
4. Square D; a brand of Schneider Electric.
5. Or Approved Equal.

B. General Requirements: Comply with UL 489, NEMA AB 1, and NEMA AB 3, with interrupting capacity to comply with available fault currents.

C. Thermal-Magnetic Circuit Breakers: Inverse time-current element for low-level overloads and instantaneous magnetic trip element for short circuits. Adjustable magnetic trip setting for circuit-breaker frame sizes 250 A and larger.

D. Adjustable, Instantaneous-Trip Circuit Breakers: Magnetic trip element with front-mounted, field-adjustable trip setting.

E. Electronic Trip Circuit Breakers: Field-replaceable rating plug, rms sensing, with the following field-adjustable settings:

1. Instantaneous trip.
2. Long- and short-time pickup levels.
3. Long- and short-time time adjustments.
4. Ground-fault pickup level, time delay, and I^2t response.

F. Current-Limiting Circuit Breakers: Frame sizes 400 A and smaller, and let-through ratings less than NEMA FU 1, RK-5.

G. Ground-Fault, Circuit-Interrupter (GFCI) Circuit Breakers: Single- and two-pole configurations with Class A ground-fault protection (6-mA trip).

H. Ground-Fault, Equipment-Protection (GFEP) Circuit Breakers: With Class B ground-fault protection (30-mA trip).

I. Features and Accessories:

1. Standard frame sizes, trip ratings, and number of poles.
2. Lugs: Mechanical type, suitable for number, size, trip ratings, and conductor material.
3. Application Listing: Appropriate for application; Type SWD for switching fluorescent lighting loads; Type HID for feeding fluorescent and high-intensity discharge lighting circuits.
4. Ground-Fault Protection: Comply with UL 1053; integrally mounted, self-powered or remote-mounted and powered type with mechanical ground-fault indicator; relay with adjustable pickup and time-delay settings, push-to-test feature, internal memory, and shunt trip unit; and three-phase, zero-sequence current transformer/sensor.
5. Shunt Trip: Trip coil energized from separate circuit, with coil-clearing contact.

6. Undervoltage Trip: Set to operate at 35 to 75 percent of rated voltage without intentional time delay.
7. Auxiliary Contacts: One SPDT switch with "a" and "b" contacts; "a" contacts mimic circuit-breaker contacts, "b" contacts operate in reverse of circuit-breaker contacts.

2.5 MOLDED-CASE SWITCHES

A. Manufacturers: Subject to compliance with requirements, provide products by one of the following:

1. Eaton Electrical Inc.; Cutler-Hammer Business Unit.
2. General Electric Company; GE Consumer & Industrial - Electrical Distribution.
3. Siemens Energy & Automation, Inc.
4. Square D; a brand of Schneider Electric.
5. Or Approved Equal.

B. General Requirements: MCCB with fixed, high-set instantaneous trip only, and short-circuit withstand rating equal to equivalent breaker frame size interrupting rating.

C. Features and Accessories:

1. Standard frame sizes and number of poles.
2. Lugs: Mechanical type, suitable for number, size, trip ratings, and conductor material.
3. Ground-Fault Protection: Comply with UL 1053; remote-mounted and powered type with mechanical ground-fault indicator; relay with adjustable pickup and time-delay settings, push-to-test feature, internal memory, and shunt trip unit; and three-phase, zero-sequence current transformer/sensor.
4. Shunt Trip: Trip coil energized from separate circuit, with coil-clearing contact.
5. Undervoltage Trip: Set to operate at 35 to 75 percent of rated voltage without intentional time delay.
6. Auxiliary Contacts: One SPDT switch with "a" and "b" contacts; "a" contacts mimic switch contacts, "b" contacts operate in reverse of switch contacts.

2.6 ENCLOSURES

A. Enclosed Switches and Circuit Breakers: NEMA AB 1, NEMA KS 1, NEMA 250, and UL 50, to comply with environmental conditions at installed location.

1. Indoor, Dry and Clean Locations: NEMA 250, Type 1.
2. Outdoor Locations: NEMA 250, Type 3R.
3. Kitchen and Wash-Down Areas: NEMA 250, Type 4X, stainless steel.
4. Other Wet or Damp, Indoor Locations: NEMA 250, Type 4.
5. Indoor Locations Subject to Dust, Falling Dirt, and Dripping Noncorrosive Liquids: NEMA 250, Type 12.

PART 3 - EXECUTION

3.1 EXAMINATION

A. Examine elements and surfaces to receive enclosed switches and circuit breakers for compliance with installation tolerances and other conditions affecting performance of the Work.

B. Proceed with installation only after unsatisfactory conditions have been corrected.

3.2 INSTALLATION

A. Install individual wall-mounted switches and circuit breakers with tops at uniform height unless otherwise indicated.

B. Temporary Lifting Provisions: Remove temporary lifting eyes, channels, and brackets and temporary blocking of moving parts from enclosures and components.

C. Install fuses in fusible devices.

D. Comply with NECA 1.

3.3 IDENTIFICATION

A. Comply with requirements in Division 26 Section "Identification for Electrical Systems."

1. Identify field-installed conductors, interconnecting wiring, and components; provide warning signs.
2. Label each enclosure with engraved metal or laminated-plastic nameplate.

3.4 FIELD QUALITY CONTROL

A. Perform tests and inspections.

1. Manufacturer's Field Service: Engage a factory-authorized service representative to inspect components, assemblies, and equipment installations, including connections, and to assist in testing.

B. Acceptance Testing Preparation:

1. Test insulation resistance for each enclosed switch and circuit breaker, component, connecting supply, feeder, and control circuit.
2. Test continuity of each circuit.

C. Tests and Inspections:

1. Perform each visual and mechanical inspection and electrical test stated in NETA Acceptance Testing Specification. Certify compliance with test parameters.
2. Correct malfunctioning units on-site, where possible, and retest to demonstrate compliance; otherwise, replace with new units and retest.

3. Perform the following infrared scan tests and inspections and prepare reports:

   a. Initial Infrared Scanning: After Substantial Completion, but not more than 60 days after Final Acceptance, perform an infrared scan of each enclosed switch and circuit breaker. Remove front panels so joints and connections are accessible to portable scanner.

4. Test and adjust controls, remote monitoring, and safeties. Replace damaged and malfunctioning controls and equipment.

D. Enclosed switches and circuit breakers will be considered defective if they do not pass tests and inspections.

E. Prepare test and inspection reports, including a certified report that identifies enclosed switches and circuit breakers and that describes scanning results. Include notation of deficiencies detected, remedial action taken, and observations after remedial action.

3.5 ADJUSTING

A. Adjust moving parts and operable components to function smoothly and lubricate as recommended by manufacturer.

END OF SECTION 262816

SECTION 264313 - SURGE PROTECTIVE DEVICES FOR LOW-VOLTAGE ELECTRICAL POWER CIRCUITS

PART 1 - GENERAL

1.1 SUMMARY

A. Section Includes:

1. Type 2 surge protective devices (SPDs).
2. Conductors and cables.

B. Related Requirements:

1. Section 260010 "Supplemental Requirements for Electrical" for additional abbreviations, definitions, submittals, qualifications, testing agencies, and other Project requirements applicable to Work specified in this Section.
2. Section 262416 "Panelboards" for integral SPDs installed by panelboard manufacturer.
3. Section 262726 "Wiring Devices" for integral SPDs installed by receptacle manufacturer.

1.2 DEFINITIONS

A. In: Nominal discharge current.

B. Maximum Continuous Operating Voltage (MCOV): The maximum designated RMS value of the power frequency voltage that may be continuously applied to the mode of protection of an SPD.

C. Metal-Oxide Varistor (MOV): An electronic component with a significant bidirectional, nonlinear current-voltage characteristic.

D. Mode(s), Modes of Protection, or Protection Modes: Electrical paths where the SPD offers defense against transient overvoltages. Examples include: line to neutral (L-N), line to ground (L-G), line to line (L-L), and neutral to ground (N-G).

E. SCCR: Short-circuit current rating.

F. Type 1 SPDs: Permanently connected SPDs intended for installation between the secondary of the service transformer and the line side of the service disconnect overcurrent device.

G. Type 2 SPDs: Permanently connected SPDs intended for installation on the load side of the service disconnect overcurrent device, including SPDs located at the branch panel.

H. Type 3 SPDs: Point of utilization SPDs.

I. Type 4 SPDs: Component SPDs, including discrete components, as well as assemblies.

J. Type 5 SPDs: Discrete component surge suppressors, such as MOVs that may be mounted on a printed wiring board, connected by its leads or provided within an enclosure with mounting means and wiring terminations.

K. Voltage Protection Rating (VPR): A rating selected from UL 1449 list of preferred values

assigned to each mode of protection.

1.3 ACTION SUBMITTALS

A. Product Data:

1. For each type of product.

a. Include electrical characteristics, specialties, and accessories for SPDs.
b. Certification of compliance with UL 1449 by qualified electrical testing laboratory recognized by authorities having jurisdiction including the following information:

1) Tested values for VPRs.
2) In ratings.
3) MCOV, type designations.
4) OCPD requirements.
5) Manufacturer's model number.
6) System voltage.
7) Modes of protection.

B. Field quality-control reports.

1.4 INFORMATIONAL SUBMITTALS

A. Sample Warranty: For manufacturer's special warranty.

1.5 WARRANTY

A. Special Manufacturer Extended Warranty: Manufacturer warrants that SPDs perform in accordance with specified requirements and agrees to provide repair or replacement of SPDs that fail to perform as specified within extended warranty period.

1. Initial Extended Warranty Period: Five year(s) from date of Substantial Completion, for labor, materials, and equipment.

PART 2 - PRODUCTS

2.1 TYPE 2 SURGE PROTECTIVE DEVICES (SPDs)

A. Manufacturers: Subject to compliance with requirements, provide products by the following][provide products by one of the following:

1. ABB Electrification Installations Products
2. Advanced Protection Technologies Inc. (APT)
3. ALLTEC LLC
4. Citel, Inc.
5. Eaton
6. Intermatic, Inc
7. Leviton Manufacturing Co., Inc.
8. Liebert; Vertiv Holdings Co.

9. Mersen USA
10. Schneider Electric USA, Inc.
11. Siemens Industry, Inc., Energy Management Division
12. SSI, an ILSCO Company

B. Source Limitations: Obtain devices from single source from single manufacturer.

C. General Characteristics:

1. Reference Standards: UL 1449, Type 2.
2. MCOV: Not less than 125 percent of nominal system voltage for 208Y/120 V and 120/240 V power systems, and not less than 115 percent of nominal system voltage for 480Y/277 V power systems.
3. Peak Surge Current Rating: Minimum single-pulse surge current withstand rating per phase must not be less than 100 kA. Peak surge current rating must be arithmetic sum of the ratings of individual MOVs in a given mode.
4. Protection modes and UL 1449 VPR for grounded wye circuits with 480Y/277 V and 208Y/120 V, three-phase, four-wire circuits must not exceed the following:

   a. Line to Neutral: [1200 V for 480Y/277 V and 700 V for 208Y/120 V.
   b. Line to Ground: [1200 V for 480Y/277 V and 700 V for 208Y/120 V.
   c. Neutral to Ground: [1200 V for 480Y/277 V and700 V for 208Y/120 V.
   d. Line to Line: [2000 V for 480Y/277 V and 1200 V for 208Y/120 V.

5. SCCR: Equal or exceed 100 kA.
6. In Rating: 20 kA.

D. Options:

1. Include LED indicator lights for power and protection status.
2. Include internal thermal protection that disconnects the SPD before damaging internal suppressor components.
3. Include surge counter.

2.2 ENCLOSURES

A. Indoor Enclosures: Type 1.

2.3 CONDUCTORS AND CABLES

A. Power Wiring: Same size as SPD leads, complying with Section 260519 "Low-Voltage Electrical Power Conductors and Cables."

PART 3 - EXECUTION

3.1 INSTALLATION

A. Provide OCPD and disconnect for installation of SPD in accordance with UL 1449 and manufacturer's instructions.

B. Install leads between disconnects and SPDs short, straight, twisted, and in accordance with

manufacturer's instructions. Comply with wiring methods in Section 260519 "Low-Voltage Electrical Power Conductors and Cables."

1. Do not splice and extend SPD leads unless specifically permitted by manufacturer.
2. Do not exceed manufacturer's recommended lead length.
3. Do not bond neutral and ground.

C. Use crimped connectors and splices only. Wire nuts are unacceptable.

3.2 STARTUP SERVICE

A. Complete startup checks in accordance with manufacturer's instructions.

B. Do not perform insulation-resistance tests of the distribution wiring equipment with SPDs installed. Disconnect SPDs before conducting insulation-resistance tests; reconnect them immediately after the testing is over.

C. Energize SPDs after power system has been energized, stabilized, and tested.

END OF SECTION 264313

SECTION 265000 - LIGHTING

1.1 SUMMARY

A. Related Requirements:

1. Section 260519 "Low-Voltage Electrical Power Conductors and Cables" specifies wiring connections installed by this Section.
2. Section 260529 "Hangers and Supports for Electrical Systems" specifies channel and angle supports installed by this Section.
3. Section 260553 "Identification for Electrical Systems" specifies electrical equipment labels and warning signs installed by this Section.
4. Section 260923 "Lighting Control Devices" specifies automatic control of lighting, including time switches, photoelectric relays, occupancy sensors, and multipole lighting relays and contactors installed by this Section.

1.2 ACTION SUBMITTALS

A. Provide product data and shop drawings for all lighting fixtures shown on plan.

1. Design drawing show the intended basis of design fixtures.
2. If a substitution to the lighting fixture is made, it is the contractor's responsibility to ensure that the lumen output, lighting distribution, and input power of the lighting fixture are within 5% of the original design specifications.

1.3 CLOSEOUT SUBMITTALS

A. Warranty documentation.

1.4 MAINTENANCE MATERIAL SUBMITTALS

A. Spare parts.

B. Extra stock material.

1.5 WARRANTY FOR LUMINAIRES

A. Special Installer Extended Warranty: Installer warrants that fabricated and installed luminaires perform in accordance with specified requirements and agrees to repair or replace products that fail to perform as specified within extended-warranty period. Warranty must convey to Owner upon acceptance of the Work.

1. Extended-Warranty Period: Two years from date of Substantial Completion; full coverage for labor, materials, and equipment.

1.6 LUMINAIRES

A. Manufacturer: Basis of design lighting fixture selections are shown on contract drawings. Contractor shall provide indicated lighting fixtures or submit lighting package to Architects for approval.

1. It is the contractor's responsibility to ensure that the lumen output, lighting distribution, and input power of the lighting fixture are within 10% of the original design specifications.
2. Mounting hardware for any lighting fixture submittal for approval as an equal must be compatible with mounting configuration specified on plan. Any mounting hardware required to mount lighting fixture as specified on plan shall be provided at no additional cost.

B. Emergency Egress Lighting: As part of this design, lighting fixture indicated as emergency egress lighting fixtures shall be provided with an integral battery system that will provide 90 minutes of uninterrupted power upon loss of power. An un-switched circuit shall be provided to the lighting fixture as required.

1. Where a lighting fixture cannot be provided with an integral battery back-up system, a remote inverter shall be provided to provide power to the lighting fixture. The remote inverter, any additional wiring, conduit, or controls shall be provided at no cost to the client.

1.7 LUMINAIRE FITTINGS

A. Luminaire Support Accessories:

1. Product Characteristics:
   a. Sized and rated for luminaire weight.
   b. Capable of maintaining luminaire position after cleaning and relamping.
   c. Capable of supporting luminaire without causing deflection of ceiling or wall.
   d. Capable of supporting horizontal force equal to 100 percent of luminaire weight and vertical force equal to 400 percent of luminaire weight.
2. Required Product Options:
   a. Hook Hangers: Integrated assembly matched to luminaire, supply voltage, and equipment with threaded attachment, cord, and locking-type plug.
   b. Wires: ASTM A641/A641M, Class 3, soft temper, zinc-coated steel, 12 gage wire supports adjustable to 10 ft in length.
   c. Aircraft Cables: 5/32 inch diameter aircraft cable supports adjustable to 10 ft in length.
   d. Single-Stem Hangers: 1/2 inch nominal diameter steel tubing with swivel ball fittings and ceiling canopy. Finish same as luminaire.
   e. Rod Hangers: 3/16 inch nominal diameter, cadmium-plated, threaded steel rod.

1.8 PREPARATION

A. Shop Drawings: Prepare and submit the following:

1. Drawings, Diagrams, and Supporting Documents for Custom Luminaires:
   a. Include plans, elevations, sections, and mounting and attachment details.

b. Include details of luminaire assemblies. Indicate dimensions, weights, loads, required clearances, method of field assembly, components, and location and size of each field connection.
c. Include diagrams for power, signal, and control wiring.

B. Temporary Lighting: If approved by Architect, specified luminaires for Project may be installed for temporary lighting. Install and energize minimum quantity of luminaires necessary to meet needs of construction activities. When construction is sufficiently complete, remove, disassemble, clean, and relamp luminaires used for temporary lighting before reinstalling for Project delivery.

1.9 SYSTEM STARTUP

A. Perform startup service.

1.10 ADJUSTING

A. Luminaire Aiming Adjustments: When requested within 12 months of date of Substantial Completion, provide on-site assistance in adjusting aiming direction of luminaires to suit occupied conditions. Make up to two visits to Project during other-than-normal hours for this purpose. Some of this work may be required during hours of darkness.

END OF SECTION 265000

SECTION 265213 - EMERGENCY AND EXIT LIGHTING

PART 1 - GENERAL

1.1 SUMMARY

A. Section Includes:

1. Emergency lighting.
2. Exit signs.
3. Luminaire support components.

1.2 ACTION SUBMITTALS

A. Product Data:

1. For each type of exit sign and emergency lighting support.
   a. Include data on features, accessories, and finishes.
   b. Include physical description of unit and dimensions.
   c. Battery and charger for light units.
   d. Include life, output of luminaire (lumens, CCT, and CRI), and energy-efficiency data.
   e. Include photometric data and adjustment factors based on laboratory tests by, or under supervision of, qualified luminaire photometric testing laboratory, for each luminaire type.

B. Product Schedule:

1. For exit signs.

1.3 INFORMATIONAL SUBMITTALS

1.4 WARRANTY

A. Special Installer Extended Warranty for Emergency and Exit Lighting: Installer warrants that fabricated and installed emergency luminaires and exit signs, including batteries, perform in accordance with specified requirements and agrees to repair or replace components and assemblies that fail to perform as specified within extended warranty period.

1. Extended Warranty Period: Two year(s) from date of Substantial Completion; full coverage for labor, materials, and equipment.

PART 2 - PRODUCTS

2.1 GENERAL REQUIREMENTS FOR EMERGENCY LIGHTING

A. Electrical Components, Devices, and Accessories: Listed and labeled in accordance with NFPA 70 and UL 924, by qualified electrical testing laboratory recognized by authorities having jurisdiction, and marked for intended location and application.

B. Comply with NFPA 101.

C. Comply with NEMA LE 4 for recessed luminaires.

D. Internal Type Emergency Power Unit: Self-contained, modular, battery-inverter unit, factory mounted within luminaire body.

1. Emergency Connection: Operate one lamp(s) continuously at an output of 1100 lumens each upon loss of normal power. Connect unswitched circuit to battery-inverter unit and switched circuit to luminaire ballast.
2. Operation: Relay automatically turns lamp on when power-supply circuit voltage drops to 80 percent of nominal voltage or below. Lamp automatically disconnects from battery when voltage approaches deep-discharge level. When normal voltage is restored, relay disconnects lamps from battery, and battery is automatically recharged and floated on charger.
3. Test Push-Button and Indicator Light: Visible and accessible without opening luminaire or entering ceiling space.
   a. Push Button: Push-to-test type, in unit housing, simulates loss of normal power and demonstrates unit operability.
   b. Indicator Light: LED indicates normal power on. Normal glow indicates trickle charge; bright glow indicates charging at end of discharge cycle.
4. Battery: Sealed, maintenance-free, type.
5. Charger: Fully automatic, solid-state, constant-current type with sealed power transfer relay.
6. Integral Self-Test: Factory-installed electronic device automatically initiates code-required test of unit emergency operation at required intervals. Test failure is annunciated by an integral audible alarm and a flashing red LED.

2.2 EXIT SIGNS

A. General Characteristics: Comply with UL 924; for sign colors, visibility, luminance, and lettering size, comply with authorities having jurisdiction.

B. Internally Lighted Sign :

1. Manufacturers: Refer to "Lighting Fixture Schedule" for basis of design product. Subject to compliance with requirements, available manufacturers offering products that may be incorporated into the Work include, but are not limited to, the following:
   a. Amerlux.
   b. Cooper Lighting Solutions; Signify North America Corp.
   c. Evenlite, Inc.
   d. Hubbell Lighting; brand of Hubbell Electrical Solutions; Hubbell Incorporated.
   e. Lithonia Lighting; Acuity Brands Lighting, Inc.
   f. Philips; Signify North America; Signify Holding.

g. Ruud Lighting; brand of Cree Lighting; subsidiary of Ideal Industries, Inc.

2. Options:
   a. Operating at nominal voltage of 277 V(ac) .
   b. Lamps for AC Operation:
      1) LEDs; 50,000 hours minimum rated lamp life.
   c. Self-Powered Exit Signs (Battery Type): Internal emergency power unit.

2.3 METAL FINISHES

A. Appearance of Finished Work: Noticeable variations in same piece are not acceptable. Variations in appearance of adjoining components are acceptable if they are within range of approved Samples and are assembled or installed to minimize contrast.

2.4 LUMINAIRE SUPPORT COMPONENTS

A. Comply with requirements in Section 260529 "Hangers and Supports for Electrical Systems" for channel and angle iron supports and nonmetallic channel and angle supports.

PART 3 - EXECUTION

3.1 INSTALLATION

A. Install luminaires level, plumb, and square with ceilings and walls unless otherwise indicated.

3.2 IDENTIFICATION

A. Identify system components, wiring, cabling, and terminals. Comply with requirements for identification specified in Section 260553 "Identification for Electrical Systems."

3.3 ADJUSTING

A. Adjustments: Within 12 months of date of Substantial Completion, provide on-site visit to do the following:

1. Inspect luminaires. Replace lamps, , batteries, exit signs, and luminaires that are defective.
   a. Parts and supplies must be manufacturer's authorized replacement parts and supplies.
2. Conduct short-duration tests on all emergency lighting.

3.4 PROTECTION

A. Remove and replace luminaires and exit signs that are damaged or caused to be unfit for use by construction activities.

END OF SECTION 265213

SECTION 284600 - FIRE DETECTION AND ALARM

PART 1 - GENERAL

1.1 SUMMARY

A. Section Includes:

1. Fire-alarm system control units.
2. Dedicated function control units.
3. Fire-alarm remote annunciators.
4. Fire-alarm auxiliary power supplies.
5. Fire-alarm audio amplifiers.
6. Fire-alarm terminal cabinets.
7. Manual fire-alarm boxes.
8. Heat-sensing fire detectors.
9. Smoke-sensing fire detectors.
10. Radiant energy-sensing fire detectors.
11. Combination, multi-criteria, and multi-sensor detectors.
12. Carbon monoxide detectors.
13. Sprinkler waterflow alarm-initiating devices.
14. Audible notification appliances.
15. Visual notification appliances.
16. Combination audible/visual notification appliances.
17. Firefighters' two-way, in-building wired telephone communications system.
18. Fire-alarm supervised control module interfaces for fire safety functions.
19. Fire-alarm supervisory signal-initiating devices.
20. Fire-alarm digital alarm communicator transmitters.
21. Fire-alarm radio alarm transmitters.
22. Fire-alarm record documentation cabinets.
23. Passive graphic maps.
24. Fire-alarm cables.

B. Related Requirements:

1. Section 260010 "Supplemental Requirements for Electrical" specifies additional requirements applicable to coordinating, scheduling, and sequencing of the Work specified in this Section.
2. Section 078413 "Penetration Firestopping" specifies materials and methods for sealing penetrations of rated walls and partitions referenced by this Section.
3. Section 230923 "Direct Digital Control (DDC) System for HVAC" specifies HVAC control interfaces referenced by this Section.
4. Section 260529 "Hangers and Supports for Electrical Systems" specifies hangers, supports, and concrete bases referenced by this Section.
5. Section 260533.13 "Conduits for Electrical Systems" specifies raceway types installed by this Section.
6. Section 260553 "Identification for Electrical Systems" specifies electrical equipment labels and warning signs installed by this Section.
7. Section 260923 "Lighting Control Devices" specifies emergency lighting control interfaces referenced by this Section.
8. Section 262816 "Enclosed Switches and Circuit Breakers" specifies shunt-trip control interfaces referenced by this Section.

1.2 REFERENCES

A. Abbreviations and Acronyms for Electrical Terms and Units of Measure:

1. AWG: American wire gauge; see ASTM B258.
2. BAS: Building automation system.
3. BMS: Building management system.
4. cd: Candela, the SI fundamental unit of luminous intensity.
5. DACR: Digital alarm communicator receiver.
6. DACT: Digital alarm communicator transmitter.
7. dB(A-weighted) or dB(A): Decibel acoustical sound pressure level with A-weighting applied in accordance with IEC 61672-1.
8. EMP: Electrical maintenance program (operation and maintenance); electromagnetic pulse (transient analysis).
9. EPS: Emergency power supply.
10. EPSS: Emergency power supply system.
11. ERCES: Emergency responder communications enhancement system.
12. ESS: Energy storage system.
13. FACU: Fire-alarm control unit.
14. FAS: Fire-alarm system.
15. IDC: Initiating device circuit.
16. IP: Internet Protocol.
17. IR: Infrared.
18. LAN: Local area network.
19. LCD: Liquid-crystal display.
20. LED: Light-emitting diode.
21. Li-ion: Lithium-ion.
22. NAC: Notification appliance circuit.
23. N.C.: Normally closed.
24. Ni-Cd: Nickel-cadmium.
25. Ni-MH: Nickel-metal hydride.
26. N.O.: Normally open.
27. PC: Personal computer.
28. PLFA: Power-limited fire alarm.
29. PoE: Power over Ethernet.
30. POTS: Plain old telephone service. See "public switched telephone network" definition.
31. PSTN: Public switched telephone network.
32. RAT: Radio alarm transmitter.
33. SLC: Signaling-line circuit.
34. TR: Tamper resistant.
35. UL: (standards) UL Standards & Engagement Inc.; (product categories) UL Solutions, Inc.
36. UL CCN: UL Category Control Number.
37. UPS: Uninterruptible power supply.
38. VoIP: Voice over Internet Protocol.
39. VPN: Virtual private network.
40. VRLA: Valve regulated lead acid; also called "sealed lead acid (SLA)" or "valve regulated sealed lead acid."
41. WAN: Wide area network.
42. WR: Weather resistant.

B. Abbreviations and Acronyms for Electrical Raceway Types:

1. EMT: Electrical metallic tubing.
2. EMT-S: Steel electrical metallic tubing.
3. ERMC-S: Steel electrical rigid metal conduit.

4. ERMC-S-G: Galvanized-steel electrical rigid metal conduit.
5. FMC: Flexible metal conduit.
6. FMC-S: Steel flexible metal conduit.
7. IMC: Steel electrical intermediate metal conduit.
8. LFMC: Liquidtight flexible metal conduit.
9. LFMC-A: Aluminum liquidtight flexible metal conduit.
10. LFMC-S: Steel liquidtight flexible metal conduit.
11. PVC: Rigid PVC conduit.
12. PVC-40: Schedule 40 rigid PVC conduit.
13. PVC-80: Schedule 80 rigid PVC conduit.
14. RGS: See ERMC-S-G.
15. RMC: See ERMC raceway types above.

C. Abbreviations and Acronyms for Electrical Single-Conductor and Multiple-Conductor Cable Types:

1. CI: Circuit integrity cable.
2. FPL: Power-limited fire-alarm cable.
3. FPLP: Power-limited fire-alarm plenum cable.
4. FPLR: Power-limited fire-alarm riser cable.
5. MC-FPL/FPLR/FPLP: Metal-clad cable containing FPL, FPLR, or FPLP.
6. OFC: Conductive optical fiber general-purpose cable.
7. OFCG: Conductive optical fiber general-purpose cable.
8. OFCP: Conductive optical fiber plenum cable.
9. OFCR: Conductive optical fiber riser cable.
10. OFN: Nonconductive optical fiber general-purpose cable.
11. OFNG: Nonconductive optical fiber general-purpose cable.
12. OFNP: Nonconductive optical fiber plenum cable.
13. OFNR: Nonconductive optical fiber riser cable.

D. Definitions:

1. Cable: In accordance with NIST NBS Circular 37 and IEEE standards, in the United States for the purpose of interstate commerce, the definition of "cable" is (1) a conductor with insulation, or a stranded conductor with or without insulation (single-conductor cable); or (2) a combination of conductors insulated from one another (multiple-conductor cable).
2. Conductor: In accordance with NIST NBS Circular 37 and IEEE standards, in the United States for the purpose of interstate commerce, the definition of "conductor" is (1) a wire or combination of wires not insulated from one another, suitable for carrying an electric current; (2) (National Electrical Safety Code) a material, usually in the form of wire, cable, or bar, suitable for carrying an electric current; or (3) (general) a substance or body that allows a current of electricity to pass continuously along it.
3. Conduit: A structure containing one or more duct raceways.
4. Designated Seismic System: An architectural, electrical, or mechanical system and its components for which the component importance factor is greater than 1.0 when determined in accordance with Section 018123 "Facility Seismic and Wind Criteria."
5. Direct Buried: Installed underground without encasement in concrete or other protective material.
6. Duct Bank: An arrangement of conduit providing one or more continuous duct raceways between two points.
7. Duct Raceway: A single enclosed raceway for conductors or cable.
8. Emergency Systems: Those systems legally required and classed as emergency by municipal, state, federal, or other codes, or by any governmental agency having jurisdiction that are designed to ensure continuity of lighting, electrical power, or both, to designated areas and equipment in the event of failure of the normal supply for safety to

human life.

9. Public Switched Telephone Network (PSTN): Analog telephone technology that uses twisted pair cables from a telephone-provider central office for the transmission medium. "PSTN" refers to the telephone network; "POTS" refers to the individual subscriber line.
10. Voice over Internet Protocol (VoIP): Digital telephone packet technology that uses the internet for its transmission medium.
11. Wire: In accordance with NIST NBS Circular 37 and IEEE standards, in the United States for the purpose of interstate commerce, the definition of "wire" is a slender rod or filament of drawn metal. A group of small wires used as a single wire is properly called a "stranded wire." A wire or stranded wire covered with insulation is properly called an "insulated wire" or a "single-conductor cable." Nevertheless, when the context indicates that the wire is insulated, the term "wire" will be understood to include the insulation.

1.3 ACTION SUBMITTALS

A. Product Data: For each type of product. In addition to information identified in Section 013300 "Submittal Procedures," submit the following:

1. Product Listing: Include copy of unexpired approval letter, on letterhead of qualified electrical testing agency, certifying product's compliance with specified listing criteria.

    a. If listed manufacturer differs from selling manufacturer, indicate relationship between entities on submittal. Clearly indicate which entity warrants product performance and fitness for purpose.
    b. Listing criteria identified in approval letter must match specified listing criteria. UL label indicating approval of equipment's enclosure is not considered approval of equipment for intended application.
    c. Product identification in approval letter must match product branding and model numbers in submittal. Approval letters for discontinued or superseded products are not acceptable for submitted product.

B. Shop Drawings shall be prepared by persons with the following qualifications:

1. Trained and certified by manufacturer in fire-alarm system design.

    a. NICET-certified, fire-alarm technician; Level IV minimum.
    b. Licensed or certified by authorities having jurisdiction.

C. Shop Drawings: Prepare and submit the following:

1. Cover sheet indicating protected premises name and location and Owner information, name of installer, device legend and symbols acceptable to the authorities having jurisdiction, and date of issue and any revision dates.
2. Floor Plans:

    a. Floor or level identification.
    b. Point of compass (indication of north).
    c. Graphic scale.
    d. All walls and doors.
    e. All partitions extending to within 15 percent of the ceiling height.
    f. Room and area descriptions.
    g. Acoustically distinguishable spaces.
    h. Minimum required illumination levels.
    i. System devices/component locations.

j. Locations of the system's primary power disconnecting means.
k. Locations of monitor/control interfaces to other systems.
l. System riser locations.
m. Type and number of system components/devices on each circuit, on each floor or level.
n. Type and quantity of conductors for each circuit.
o. Identification of any ceiling over 10 ft in height where automatic fire detection is being proposed.
p. Details of ceiling geometries, including beams and solid joists, where automatic fire detection is being proposed.
q. Acoustic properties of spaces, where known.
r. Pathway class designations, including the location of any end-of-line supervisory or power devices that are required by the pathway class.
s. Pathway survivability level designations.

3. Wiring Diagrams:

a. System riser diagrams coordinated with the floor plans and indicating the following information:

1) General arrangement of the system in building cross-section.
2) Number of risers.
3) Type and number of circuits in each riser.
4) Type and number of system components/devices on each circuit, on each floor or level.
5) Number of conductors for each circuit.
6) Pathway class designation, including the location of any end-of-line supervisory or power devices that are required by the pathway class.
7) Pathway survivability level designations.

b. Control unit diagrams for all control equipment, power supplies, battery chargers, and annunciators indicating the following information:

1) Identification of control equipment depicted.
2) Location(s) of control equipment.
3) All field wiring terminals and terminal identifications.
4) All circuits connected to field wiring terminals and circuit identifications.
5) All indicators and manual controls.
6) Field connections to supervising station signaling equipment, releasing equipment, and emergency safety control interfaces.

c. Typical fire-alarm component schematic wiring diagrams for all initiating devices, notification appliances, remote indicators, remote test stations, end-of-line and power supervisory devices, and annunciators.

4. Fire-Alarm Input/Output Sequence: Include a narrative description or input/output matrix of operation to describe the fire-alarm system sequence of operation.
5. Details:

a. Component installation details.
b. Custom graphic annunciator layout.

6. Calculations:

a. Battery calculations.

b. Voltage-drop calculations.
c. Speaker circuit calculations.
d. Spare capacity circuit calculations.

D. Field quality-control reports.

1.4 INFORMATIONAL SUBMITTALS

A. Field Reports:

1. Manufacturer's field reports for field quality-control support.
2. Manufacturer's field reports for system startup support.

B. Qualification Statements: For Installer.

1. Provide copies of NICET Level II Fire Alarm certifications for a minimum of two (2) technicians assigned to this project.

C. Sample Warranty: Submittal must include line-item pricing for replacement parts and labor.

1.5 CLOSEOUT SUBMITTALS

A. Warranty documentation.

B. Maintenance service agreement.

C. Software and firmware service agreement.

1.6 MAINTENANCE MATERIAL SUBMITTALS

A. Spare parts.

B. Special tools.

1.7 REGULATORY AGENCY APPROVALS

A. Contractor shall submit Fire Alarm shop drawings for review to local authority having jurisdiction Fire Department for approval. Contractor shall submit a copy of approved Fire Alarm shop drawings to Architect for record.

1.8 QUALIFICATIONS

A. Fire-Alarm Systems (FAS) Technician Trainee: Having at least six months of experience and possessing active NICET FAS Level I certification. Able to perform limited tasks under direct supervision.

B. Fire-Alarm Systems (FAS) Associate Engineering Technician: Having at least two years of experience and possessing active NICET FAS Level II certification. Able to review drawings, specifications, codes, and standards; to conduct basic installation activities; and to perform basic troubleshooting.

C. Fire-Alarm Systems (FAS) Engineering Technician: Having at least five years of experience and possessing active NICET FAS Level III certification. Able to perform system layout activities, supervise Level I and Level II technicians, provide submittal packages, and interact with authorities having jurisdiction.

D. Fire-Alarm Systems (FAS) Senior Engineering Technician: Having at least 10 years of experience and possessing active NICET FAS Level IV certification. Able to manage multiple projects at once, interpret codes and standards, conduct training, and serve as liaison between authorities having jurisdiction, owners, engineers, and contractors.

E. Inspection and Testing of Fire-Alarm Systems (I&TFAS) Technician I: Possessing active NICET I&TFAS Level I certification. Able to perform periodic inspections and tests of basic fire-alarm systems and prepare related records and reports.

F. Inspection and Testing of Fire-Alarm Systems (I&TFAS) Technician II: Possessing active NICET I&TFAS Level II certification. Able to plan, perform, and coordinate periodic inspections and tests of complex fire-alarm systems (including one or more of suppression interfaces, networked control units, smoke control interfaces, air sampling systems, multi-zone voice evacuation systems, or high-rise applications) and prepare related records and reports.

G. Fire-Alarm Testing Agency: Entity possessing active credentials from qualified electrical testing laboratory recognized by authorities having jurisdiction.

1. On-site fire-alarm testing supervisor must possess active NICET I&TFAS Technician II certification.

1.9 WARRANTY FOR FIRE DETECTION AND ALARM SYSTEMS

A. Special Installer Extended Warranty: Installer warrants that installed fire detection and alarm system performs in accordance with specified requirements and agrees to repair or replace system components or products that fail to perform as specified within extended-warranty period. Warranty must convey to Owner upon acceptance of the Work.

1. Extended-Warranty Period: Two years from date of Substantial Completion; full coverage for labor, materials, and equipment.

B. Special Manufacturer Extended Warranty: Manufacturer warrants that fire detection and alarm system components perform in accordance with specified requirements and agrees to repair or replace system components or products that fail to perform as specified within extended-warranty period. Warranty must convey to Owner upon acceptance of the Work.

1. Initial Extended-Warranty Period: Five years from date of Substantial Completion; full coverage for labor, materials, and equipment.

PART 2 - PRODUCTS

2.1 PERFORMANCE REQUIREMENTS

A. Regulatory Requirements: Products or components listed and labeled in accordance with NFPA 70 or NFPA 72, by qualified electrical testing laboratory recognized by authorities having jurisdiction, and marked for intended location and application.

B. System Description: Noncoded, UL-certified, addressable, system with multiplexed signal transmission and voice-or-horn -and-strobe notification for evacuation.

C. Basis of Design Product: Subject to compliance with requirements, provide product indicated on drawings as manufactured by POTTER ELECTRIC.

D. Acceptable alternate manufacturers to the Basis of Design Product are as follows:

1. NOTIFIER.
2. EDWARDS.
3. SIEMENS.

E. Manufacturers: Subject to compliance with requirements, provide products by the following or equivalent:

1. Potter Electric

F. Source Limitations:

1. Contractor shall provide devices / equipment, wire, & cable that are UL Listed in accordance with the basis of design and specifications.
2. Obtain products from single manufacturer.

G. System Inputs:

1. Existing Fire Alarm System Inputs shall be maintained, unless otherwise noted.
2. Fire-alarm signal initiation must be by one or more of the following devices and systems:

a. Manual fire-alarm boxes.
b. Heat detectors.
c. Smoke detectors.
d. Flame detectors.
e. Duct smoke detectors.
f. Air-sampling smoke-detection system.
g. Carbon monoxide detectors.
h. Combustible gas detectors.
i. Automatic sprinkler system water flow.
j. Preaction system alarm.
k. Fire-extinguishing system operation.
l. Fire standpipe system.
m. Dry-pipe sprinkler system pressure flow switch.
n. Fire pump is running.

3. Supervisory signal initiation must be by one or more of the following devices and actions:

a. Valve supervisory switch.
b. High- or low-air pressure switch of dry-pipe or preaction sprinkler system.
c. Alert and Action signals of air-sampling smoke-detection systems.
d. Duct smoke detectors.
e. Elevator shunt-trip control circuit supervision.
f. Independent fire-detection and fire-suppression systems.
g. Fire pump is running.
h. Fire pump has lost power.
i. Power to the fire pump has phase reversal.
j. Zones or individual devices have been disabled.

k. FACU has lost communication with network.
l. Hose cabinet door is open.
m. Knox box cabinet door is open.

4. System trouble signal initiation must be by one or more of the following devices and actions:

a. Open circuits, shorts, and grounds in designated circuits.
b. Opening, tampering with, or removing alarm-initiating and supervisory signal-initiating devices.
c. Loss of communication with addressable sensor, input module, relay, control module, remote annunciator, or ethernet module.
d. Loss of primary power at FACU.
e. Ground or single break in internal circuits of FACU.
f. Abnormal AC voltage at FACU.
g. Break in standby battery circuitry.
h. Failure of battery charging.
i. Abnormal position of switch at FACU or remote annunciator.
j. Voice signal amplifier failure.

5. Carbon monoxide alarm signal initiation must be by the following devices and systems:

a. Carbon monoxide detectors.

H. System Outputs:

1. Existing Fire Alarm System Outputs shall be maintained, unless otherwise noted.
2. Fire-alarm signal must initiate the following actions:

a. Continuously operate alarm notification appliances, including voice evacuation notices.
b. Identify alarm and specific initiating device at FACU, connected network control panels, off-premises network control panels, and remote annunciators, including devices made connected by networking of separate fire alarm systems.
c. Transmit alarm signal to remote alarm receiving station.
d. Unlock electric door locks in designated egress paths.
e. Release fire and smoke doors held open by magnetic door holders.
f. Activate voice/alarm communication system.
g. Switch HVAC equipment controls to fire-alarm mode.
h. Activate smoke-control system (smoke management) at firefighters' smoke-control system panel.
i. Activate stairwell and elevator-shaft pressurization systems.
j. Close smoke dampers in air ducts of designated air-conditioning duct systems.
k. Activate preaction system.
l. Recall elevators to designated or alternate recall levels only upon activation of smoke detectors in respective elevator lobbies, machine rooms, or hoistways.
m. Activate elevator power shunt trip only upon activation of associated heat detector.
n. Activate emergency lighting control.
o. Activate emergency shutoffs for gas and fuel supplies, except for shutoffs serving legally required life-safety systems such as emergency generators and fire pumps.
p. Record events in system memory.
q. Indicate device in alarm on graphic annunciator.

3. System supervisory signal must initiate the following actions:

a. Initiate supervisory notification appliances.
b. Identify specific operating device event at FACU, connected network control panels, off-premises network control panels, and remote annunciators, including devices made connected by networking of separate fire alarm systems.
c. After time delay of 200 seconds, transmit trouble or supervisory signal to remote alarm receiving station.
d. Transmit system status to building management system.
e. Display system status on graphic annunciator.

4. Carbon monoxide alarm signal must initiate the following actions:

a. Initiate carbon monoxide notification appliances and sound temporal-4 signal.
b. Identify specific device initiating event at FACU, connected network control panels, off-premises network control panels, and remote annunciators, including devices made connected by networking of separate fire alarm systems.
c. Transmit carbon monoxide alarm signal to remote alarm receiving station.

2.2 FIRE-ALARM SYSTEM CONTROL UNITS

A. Description: A component of the fire-alarm system, provided with primary and secondary power sources, which receives signals from initiating devices or other fire-alarm control units, and processes these signals to determine part or all of the required fire-alarm system output functions.

B. UL UOJZ - Addressable Fire-Alarm System Control Units:

1. Listing Criteria: Investigated, labeled, and marked by qualified electrical testing laboratory in accordance with guide information and standards specified for the following UL product categories:

a. Electrical Control Units for Fire-Protective Signaling Systems: UL CCN UOJZ, including UL 864 and NFPA 72.

2. Standard Features:

a. Product Reference Standards: Ch. 23 of NFPA 72.
b. **Voice** /alarm communications.
c. Indication of which communication zones have been silenced.
d. Provide selective silencing of alarm notification appliances by building communication zone.
e. Real-time clock for time annotation of events on the event recorder.
f. Communication between the FACU and remote circuit interface panels, annunciators, and displays.
g. The FACU must be listed for connection to a central station signaling system service.
h. Provide non-volatile memory for system database, logic, operating system, and event history.
i. The system must not require manual input to initialize in the event of a complete power-down condition.
j. Alphanumeric display and system controls.
k. Minimum of two Class A or four Class B signaling-line circuits with expansion capability to add circuits.
l. Minimum of two Class A or four Class B notification appliance circuits with expansion capability to add circuits.

m. Synchronization of notification appliance circuits.

2.3 DEDICATED FUNCTION CONTROL UNITS

A. Description: A protected premises fire-alarm control unit specifically listed for supervising a single function, such as releasing service that is part of a fire-suppression system and which provides control outputs to release a fire-suppression agent based on either automatic or manual input.

B. UL SYZV - Conventional Non-Extinguishing and Non-Water-Based Releasing Device Control Unit :

1. Listing Criteria: Investigated, labeled, and marked by qualified electrical testing laboratory in accordance with guide information and standards specified for the following UL product categories:

   a. Releasing Device Control Units for Fire-Protective Signaling Systems: UL CCN SYZV, including UL 864 and NFPA 72.

2. Standard Features:

   a. Product Reference Standards: Ch. 23 of NFPA 72.
   b. Built-in alarm and trouble relays.
   c. Minimum of two Class A or four Class B initiating device circuits.
   d. Maintenance alerts.
   e. Battery charger supports.

3. Other Available Features Required by Project:

   a. Synchronization of notification appliance circuits.

2.4 FIRE-ALARM REMOTE ANNUNCIATORS

A. Description: A unit containing one or more indicator lamps, alphanumeric displays, or other equivalent means in which each indication provides status information about a fire-alarm system device, circuit, condition, or location.

2.5 FIRE-ALARM AUXILIARY POWER SUPPLIES

A. Description: An auxiliary source of low-voltage electrical operating power for fire-alarm system equipment, including the circuits and terminations connecting it to the equipment being powered. Auxiliary power supplies are often referred to as remote power supplies, booster power supplies, or notification appliance power supplies.

B. UL UOXX - Fire-Alarm Auxiliary Power Supplies :

1. Listing Criteria: Investigated, labeled, and marked by qualified electrical testing laboratory in accordance with guide information and standards specified for the following UL product categories:

   a. Control Unit Accessories for Fire-Protective Signaling Systems: UL CCN UOXX, including UL 864 and NFPA 72.

2. Standard Features:

a. Product Reference Standards: Chs. 10 and 23 of NFPA 72.
b. Minimum of four 24 V(dc) auxiliary power circuits.

3. Other Available Features Required by Project:

a. Synchronization of notification appliance circuits.
b. Addressable-type notification appliance power supply, which connects directly to a signaling-line circuit.

2.6 FIRE-ALARM AUDIO AMPLIFIERS

A. Description: A component of in-building fire emergency voice/alarm communications systems that takes a low-level audio input and amplifies the power output to distribute to fire-alarm loudspeakers. Amplifiers can be an integral component of the fire-alarm control unit or can be remotely located in a separate cabinet within the building.

2.7 FIRE-ALARM TERMINAL CABINETS

A. Description: A cabinet with hinged, lockable cover clearly labeled and intended for termination of fire-alarm conductors at junction points. Screw-type terminal blocks are provided within the terminal cabinet for conductor splices.

2.8 MANUAL FIRE-ALARM BOXES

A. Description: A manually operated device used to initiate a fire-alarm signal. Manual fire-alarm boxes come in both conventional or addressable models and may require a single-action (pull down) or double-action (push in and pull down) to initiate a fire-alarm signal. These initiating devices are sometimes referred to as manual fire-alarm stations, pull stations, or call points.

B. Accessories:

1. Factory-fabricated clear plastic enclosure with battery-operated sounder.
2. Weatherproof protective shield for conventional manual fire-alarm boxes located outdoors.

2.9 HEAT-SENSING FIRE DETECTORS

A. Description: A fire detector that detects either abnormally high temperatures or rate-of-temperature rise, or both.

B. Accessories:

1. Heat detector protective guard, where indicated on the drawings.

2.10 SMOKE-SENSING FIRE DETECTORS

A. Description: A device that detects visible or invisible particles of combustion and initiates an action. Types of smoke-sensing fire detectors include spot-type detectors, air-sampling

detectors, projected beam-type detectors, duct detectors, multi-criteria detectors, and video image smoke detectors.

B. Accessories:

1. Smoke detector protective guard, where indicated on the drawings.

C. UL UROX - Duct Smoke Detectors:

1. Listing Criteria: Investigated, labeled, and marked by qualified electrical testing laboratory in accordance with guide information and standards specified for the following UL product categories:

a. Detectors Designed for Smoke Particles: UL CCN UROX, including UL 268 and NFPA 72.

2. Standard Features:

a. Product Reference Standards: Ch. 17 of NFPA 72.
b. Integral Addressable Module: Arranged to communicate detector status (normal, alarm, or trouble) to FACU.
c. Self-Restoring: Detectors do not require resetting or readjustment after actuation to restore them to normal operation.
d. Integral Visual-Indicating Light: LED type, indicating detector has operated.
e. Detectors must be four- or two-wire type.
f. Detector address must be accessible from fire-alarm control unit and must be able to identify the detector's location within the system and its sensitivity setting.
g. Operator at FACU, having designated access level, must be able to manually access the following for each detector: primary status, device type, present average value, present sensitivity selected, and sensor range.

2.11 RADIANT ENERGY-SENSING FIRE DETECTORS

A. Description: A device that detects radiant energy, such as ultraviolet, visible, or infrared, that is emitted as a product of combustion reaction and obeys the laws of optics. Common types of radiant energy-sensing fire detectors include video image flame detectors.

2.12 COMBINATION, MULTI-CRITERIA, AND MULTI-SENSOR DETECTORS

A. Description: A device that contains multiple sensors that separately respond to physical stimulus such as heat, smoke, or fire gases, or employs more than one sensor to sense the same stimulus. This sensor is capable of generating only one alarm signal from the sensor employed in the design either independently or in combination. The sensor output signal is mathematically evaluated to determine when an alarm signal is warranted. The evaluation can be performed either at the detector or at the control unit. This detector can have a single listing that establishes the primary function of the detector, or can have listings for each sensing method employed.

B. UL UROX - Multi-Criteria Detector:

1. Listing Criteria: Investigated, labeled, and marked by qualified electrical testing laboratory in accordance with guide information and standards specified for the following UL product categories:

a. Detectors Designed for Smoke Particles: UL CCN UROX, including UL 268 and NFPA 72.

2. Standard Features:

a. Product Reference Standards: Ch. 17 of NFPA 72.
b. Field programmable.
c. Resettable from the control unit.
d. Removable from the base assembly without the use of tools and without disturbing the wiring connections.
e. Smoke Sensing Type: Photoelectric.
f. Heat Sensing Type: Fixed temperature and combination rate-of-rise.

2.13 CARBON MONOXIDE DETECTORS

A. Description: A device that detects the presence of a specific carbon monoxide concentration.

B. UL FTAM - Carbon Monoxide Detectors:

1. Listing Criteria: Investigated, labeled, and marked by qualified electrical testing laboratory in accordance with guide information and standards specified for the following UL product categories:

a. Detectors and Sensors Designed to Detect Gases and Vapors: UL CCN FTAM, including UL 2075 and NFPA 72.

2. Standard Features:

a. Product Reference Standards: Ch. 17 of NFPA 72.
b. Detector sends trouble alarm when nearing end of life or experiencing power supply problems or internal faults.
c. Detector sounder base emits Temporal-4 signal.
d. Testable by introducing test carbon monoxide into sensing cell.

2.14 SPRINKLER WATERFLOW ALARM-INITIATING DEVICES

A. Description: An initiating device used to monitor the flow of water in a wet-pipe or dry-pipe sprinkler system for the purpose of initiating an alarm signal. These devices employ operating mechanisms that include paddle operation, pressure operation, or mechanical operation.

B. UL USQT - Sprinkler Waterflow Alarm-Initiating Device :

1. Listing Criteria: Investigated, labeled, and marked by qualified electrical testing laboratory in accordance with guide information and standards specified for the following UL product categories:

a. Extinguishing System Attachments: UL CCN USQT, including UL 346 and NFPA 72.

2. Standard Features:

a. Product Reference Standards: Ch. 17 of NFPA 72.
b. Activation of the initiating device occurs within 90 seconds of waterflow at the

alarm-initiating device when flow occurs that is equal to or greater than that from a single sprinkler of the smallest orifice size installed in the system.

c. Movement of water due to waste, surges, or variable pressure must not initiate an alarm signal.
d. Adjustable time delay.
e. Pressure Range: 20 to 175 psig.
f. Operating Type: Paddle, Pressure, or Mechanically operated, as required.
g. Coded or Non-coded signaling contacts, as required.

2.15 AUDIBLE NOTIFICATION APPLIANCES

A. Description: A fire-alarm system component such as a horn or loudspeaker that provides audible output to alert occupants by the sense of hearing.

B. Accessories:

1. Audible appliance protective guard, where indicated on the drawings.

2.16 VISUAL NOTIFICATION APPLIANCES

A. Description: A fire-alarm system component that provides a visible output to alert occupants by the sense of sight, including visual strobes.

B. Accessories:

1. Visual appliance protective guard, where indicated on the drawings.

2.17 COMBINATION AUDIBLE/VISUAL NOTIFICATION APPLIANCES

A. Description: A fire-alarm system component such as a horn/strobe or loudspeaker/strobe that provides both an audible and a visible output to alert occupants by the sense of hearing and sight.

B. Accessories:

1. Combination audible/visual appliance protective guard, where indicated on the drawings.

2.18 FIREFIGHTERS' TWO-WAY, IN-BUILDING WIRED TELEPHONE COMMUNICATIONS SYSTEM

A. Description: A two-way in-building telephone communications system used by firefighters and emergency response personnel when responding to, investigating, and conducting rescue activities in a fire incident.

2.19 FIRE-ALARM SUPERVISED CONTROL MODULE INTERFACES FOR FIRE SAFETY FUNCTIONS

A. Description: An addressable fire-alarm control module that interfaces to another building system for the purpose of initiating an action for that system based upon activation of a supervisory or alarm condition on the fire-alarm system. The interface between the control module and the

other building system or equipment is supervised.

B. UL UOXX - Fire-Alarm Supervised Control Module:

1. Listing Criteria: Investigated, labeled, and marked by qualified electrical testing laboratory in accordance with guide information and standards specified for the following UL product categories:

a. Control Unit Accessories - Addressable Control Modules: UL CCN UOXX, including UL 864 and NFPA 72.

2. Standard Features:

a. Product Reference Standards: Ch. 17 of NFPA 72.
b. Field programmable.
c. Resettable from the control unit.
d. Supervises Class A initiating device circuits.
e. Capable of interfacing with the following systems:

1) Elevator controller.
2) Elevator power shunt-trip.
3) Elevator shunt-trip power monitoring.
4) HVAC line voltage.
5) Building management system.
6) Magnetic door hold-open circuits.
7) High-volume low-speed fans.
8) Door or Shutter release.
9) Electrically locked doors.

2.20 FIRE-ALARM SUPERVISORY SIGNAL-INITIATING DEVICES

A. Description: An initiating device such as a valve supervisory switch, water-level indicator, low-air-pressure switch, or low-temperature switch in which the change of state signals to the fire-alarm / releasing device control unit an off-normal condition and its restoration to normal of a fire-protection or life-safety system; or a need for action in connection with guard tours, fire-suppression systems or equipment, or maintenance features of related systems.

B. UL USQT - Water Temperature Supervisory Signal-Initiating Devices :

1. Listing Criteria: Investigated, labeled, and marked by qualified electrical testing laboratory in accordance with guide information and standards specified for the following UL product categories:

a. Extinguishing System Attachments: UL CCN USQT, including UL 346 and NFPA 72.

2. Standard Features:

a. Product Reference Standards: Ch. 17 of NFPA 72.
b. Initiates two separate and distinct signals; one indicating a decrease in water temperature to 40 deg F, and the other indicating its restoration to above 40 deg F.

C. UL USQT - Room Temperature Supervisory Signal-Initiating Devices :

1. Listing Criteria: Investigated, labeled, and marked by qualified electrical testing laboratory in accordance with guide information and standards specified for the following UL product categories:

    a. Extinguishing System Attachments: UL CCN USQT, including UL 346 and NFPA 72.

2. Standard Features:

    a. Product Reference Standards: Ch. 17 of NFPA 72.
    b. Initiates two separate and distinct signals; one indicating a decrease in room temperature to 40 deg F, and the other indicating its restoration to above 40 deg F.

D. UL USQT - Fire Extinguisher Supervisory Signal-Initiating Devices :

1. Listing Criteria: Investigated, labeled, and marked by qualified electrical testing laboratory in accordance with guide information and standards specified for the following UL product categories:

    a. Extinguishing System Attachments: UL CCN USQT, including UL 346 and NFPA 72.

2. Standard Features:

    a. Product Reference Standards: Ch. 17 of NFPA 72.
    b. Indicates conditions for a specific fire extinguisher to a fire-alarm control unit.

E. UL USQT - Fire Pump Supervisory Signal-Initiating Devices :

1. Listing Criteria: Investigated, labeled, and marked by qualified electrical testing laboratory in accordance with guide information and standards specified for the following UL product categories:

    a. Extinguishing System Attachments: UL CCN USQT, including UL 346 and NFPA 72.

2. Standard Features:

    a. Product Reference Standards: Ch. 17 of NFPA 72.
    b. Initiates a supervisory signal for any off-normal conditions of a fire pump, including the following:

        1) Fire pump running.
        2) Fire pump loss of power.
        3) Fire pump phase reversal.
        4) Fire pump transfer to secondary power.

F. UL UOXX - Generator Supervisory Signal-Initiating Devices :

1. Listing Criteria: Investigated, labeled, and marked by qualified electrical testing laboratory in accordance with guide information and standards specified for the following UL product categories:

    a. System Control Unit Accessories: UL CCN UOXX, including UL 864 and NFPA 72.

2. Standard Features:

a. Product Reference Standards: Ch. 17 of NFPA 72.
b. Initiates a supervisory signal upon indication of generator running condition.

2.21 FIRE-ALARM DIGITAL ALARM COMMUNICATOR TRANSMITTERS

A. Description: A fire-alarm system component at the protected premises to which the fire-alarm control unit connects and transmit signals indicating a status change of initiating devices or groups of devices. The DACT seizes the connected cellular signal and ethernet network, dials a preselected number to connect to a DACR, and transmits signals indicating a status change of the initiating devices.

2.22 FIRE-ALARM RADIO ALARM TRANSMITTERS

A. Description: A fire-alarm system component at the protected premises to which the fire-alarm control unit connects and transmit signals indicating a status change of initiating devices or groups of devices. The RAT transmits signals through a dedicated, licensed radio channel to the radio alarm receiver.

2.23 FIRE-ALARM RECORD DOCUMENTATION CABINETS

A. Description: A cabinet clearly labeled and intended for the storage of fire-alarm record documents, including as-built drawings; programming documentation; and inspection, testing, and maintenance documentation.

2.24 PASSIVE GRAPHIC MAPS

A. Description: A printed graphic map showing building floor plans indicating initiating device locations and control equipment locations for use by emergency responders and maintenance personnel.

B. Fire-Alarm Passive Graphic Map:

1. Standard Features:

a. Product Reference Standards: Ch. 7 of NFPA 72.
b. Indicates initiating device type, locations, and corresponding addresses.
c. Indicates control equipment locations.
d. Mounted in a plexiglass frame adjacent to the FACU.
e. Legible and sized accordingly.

2.25 FIRE-ALARM CABLES

A. UL HNIR - Power-Limited Fire-Alarm Cable (FPL):

1. Listing Criteria:

a. Power-Limited Fire-Alarm Cable: UL CCN HNIR; including UL 1424 and Article 760 of NFPA 70.

b. Vertical-Tray Flame Test: UL 1685.
c. Limited Smoke "ST1" Marking: UL 1685 or UL 2556.

2. Standard Features:

a. Solid copper conductors with 300 V rated, 75 deg C, color-coded insulation.
b. Minimum Conductor Size: 14 AWG or in accordance with manufacturer's installation instructions & guidelines.

B. UL HNIR - Power-Limited Fire-Alarm Plenum Cable (FPLP):

1. Listing Criteria:

a. Power-Limited Fire-Alarm Cable: UL CCN HNIR; including UL 1424 and Article 760 of NFPA 70.
b. Vertical-Tray Flame Test: UL 1685.
c. Limited Smoke "ST1" Marking: UL 1685 or UL 2556.
d. Plenum Rating: NFPA 262.

2. Standard Features:

a. Solid copper conductors with 300 V rated, 75 deg C, color-coded insulation.
b. Minimum Conductor Size: 14 AWG or in accordance with manufacturer's installation instructions & guidelines.

C. UL HNIR - Power-Limited Fire-Alarm Riser Cable (FPLR):

1. Listing Criteria:

a. Power-Limited Fire-Alarm Cable: UL CCN HNIR; including UL 1424 and Article 760 of NFPA 70.
b. Vertical-Tray Flame Test: UL 1685.
c. Limited Smoke "ST1" Marking: UL 1685 or UL 2556.
d. Riser Rating: UL 1666.

2. Standard Features:

a. Solid copper conductors with 300 V rated, 75 deg C, color-coded insulation.
b. Minimum Conductor Size: 14 AWG or in accordance with manufacturer's installation instructions & guidelines.

2.26 MAINTENANCE MATERIAL ITEMS

A. Spare Parts: Furnish to Owner spare parts, for repairing fire detection and alarm system components, that are packaged with protective covering for storage on-site and identified with labels describing contents. Include the following:

1. Detectors: 5% (minimum of 1) of quantity indicated on the electrical fire alarm plans.
2. Manual Fire-Alarm Boxes: 5% (minimum of 1) of quantity indicated on the electrical fire alarm plans.
3. Addressable Input & Output Modules: 5% (minimum of 1) of quantity indicated on the electrical fire alarm plans.
4. Audible Notification Appliances: 5% (minimum of 1) of quantity indicated on the electrical fire alarm plans.

5. Visual Notification Appliances: 5% (minimum of 1) of quantity indicated on the electrical fire alarm plans.
6. Combination Audible/Visual Notification Appliances: 5% (minimum of 1) of quantity indicated on the electrical fire alarm plans.

B. Special Tools: Furnish to Owner proprietary equipment, keys, and software required to operate, maintain, repair, adjust, or implement future changes to fire detection and alarm system, that are packaged with protective covering for storage on-site and identified with labels describing contents. Include the following:

1. Keys for control equipment cabinets.
2. Keys for remote test switches.
3. Wrench for manual fire-alarm boxes.

PART 3 - EXECUTION

3.1 EXAMINATION

A. Examine field conditions with Installer present for compliance with requirements for fire detection and alarm systems and other conditions affecting performance of the Work.

B. Examine all materials, products, and equipment received for defects or damage.

C. Reject all materials, products, and equipment that show signs of defects or damage.

D. Examine roughing-in for fire detection and alarm system piping to verify actual locations of piping connections before equipment installation.

E. Examine walls, floors, ceilings, and roofs for suitable conditions where fire detection and alarm system components will be installed.

F. Proceed with installation only after unsatisfactory conditions have been corrected.

3.2 SELECTION OF CABLING FOR FIRE ALARM

A. Field Circuits:

1. Comply with fire alarm system manufacturer’s installation instructions & guidelines.

3.3 SELECTION OF RACEWAYS FOR FIRE ALARM

A. Identification: At a minimum, all junction box covers for fire-alarm raceways must be identified using the color red.

B. Pathways:

1. Refer to Raceway Application Table (electrical drawing sheet E0.01) for selection of raceways.

3.4 INSTALLATION OF FIRE DETECTION AND ALARM SYSTEMS

A. Comply with manufacturer's published instructions.

B. Reference Standards for Installation: Unless more stringent installation requirements are specified in the Contract Documents or manufacturer's published instructions, comply with the following:

1. Electrical Construction: ICC IBC, ICC IFC, NFPA 1, NFPA 70, and NECA NEIS 1.
2. Commissioning of Electrical Systems: NECA NEIS 90.
3. Commissioning of Active and Passive Fire Protection Features: NFPA 3 and NFPA 4.
4. Fire-Alarm and Premises Security Work: NFPA 72, NFPA 731, NFPA 1225, and NECA NEIS 305.
5. Work in ITE Rooms: NFPA 75.
6. Work in Health Care Facilities: NFPA 99 and Article 517 of NFPA 70.
7. Life-Safety and Means-of-Egress Work: NFPA 101.
8. Emergency and Standby Power Work: NFPA 110, NFPA 111, and NECA NEIS 416.
9. Work in Confined Spaces: NFPA 350.
10. Work in Basements and Other Developed Subterranean Spaces: NFPA 520.
11. Work in Museums, Libraries, Places of Worship, and Historic Structures: NFPA 909 and NFPA 914.
12. Fire-Alarm Circuits and Pathways: Ch. 12 of NFPA 72 and Article 760 of NFPA 70.
13. Fire-Alarm Initiating Devices: Ch. 17 of NFPA 72.
14. Fire-Alarm Notification Appliances: Ch. 18 of NFPA 72.
15. Fire-Alarm Control Equipment: Ch. 23 of NFPA 72.
16. Fire-Alarm Transmitting Equipment: Ch. 23 and Ch. 26 of NFPA 72.
17. Consult Architect for resolution of conflicting requirements.

C. Interfaces with Other Work:

1. Identification: Provide labels for all initiating devices, control equipment cabinets, and associated electrical equipment.

a. Identify field-installed conductors, interconnecting wiring, and components.
b. Label initiating devices with unique identification.
c. Identify source of AC power inside each control equipment cabinet.
d. Identify circuit disconnecting means at AC power source with red engraved label. Provide approved locking device for circuit disconnecting means.
e. Label enclosures with engraved metal or laminated-plastic nameplate.
f. Identify junction box covers using the color red.
g. Identify raceway using labeling.

3.5 FIELD QUALITY CONTROL OF FIRE DETECTION AND ALARM SYSTEMS

A. Administrant for Fire-Alarm Tests and Inspections:

1. Administer and perform tests and inspections.

B. Tests and Inspections:

1. Perform manufacturer's recommended tests and inspections.
2. Perform system acceptance testing in accordance with Ch. 14 of NFPA 72.
3. Contractor is responsible for completing pre-acceptance testing to verify proper operation of the fire detection and alarm systems. Correct system deficiencies prior to scheduling a

final acceptance test.

C. Nonconforming Work:

1. Initiating devices, notification appliances, control equipment, and system accessories will be considered defective if they do not pass tests and inspections.
2. Remove and replace defective units and retest.

D. Field Quality-Control Reports: Collect, assemble, and submit test and inspection reports.

E. Manufacturer Services: Engage factory-authorized service representative to supervise field tests and inspections.

1. Manufacturer's Field Reports for Field Quality-Control Support: Prepare and submit report after each visit by factory-authorized service representative, documenting activities performed at Project site.

3.6 SYSTEM STARTUP

A. Perform startup service.

1. Complete installation and startup checks in accordance with manufacturer's published instructions.
2. Provide power to the FACU and configure internal settings.
3. Test all field wiring prior to connecting field devices and prior to connecting to the FACU. Ensure field wiring is free from ground faults and short circuits.
4. Connect field devices to field wiring.
5. Connect field wiring inside FACU cabinet.
6. Ensure system is normal and free from ground faults, open circuits, or short circuits.
7. Allow system burn-in for 30 days.
8. Correct any issues that occur during the system burn-in period.

B. Manufacturer Services: Engage factory-authorized service representative to supervise system startup.

1. Manufacturer's Field Reports for System Startup Support: Prepare and submit report after each visit by factory-authorized service representative, documenting activities performed at Project site.

3.7 PROTECTION

A. After installation, protect fire detection and alarm system equipment from construction activities. Remove and replace items that are contaminated, defaced, damaged, or otherwise caused to be unfit for use prior to acceptance by Owner.

3.8 MAINTENANCE

A. Maintenance Service Agreement: Beginning at Substantial Completion, verify that maintenance service agreement includes one-year period for full maintenance by skilled employees of manufacturer’s designated service organization. Include preventive maintenance, repair, or replacement of worn or defective components; cleaning; and adjusting as required for proper fire detection and alarm system operation. Verify that parts and supplies are manufacturer's

authorized replacement parts and supplies.

END OF SECTION 284600

SECTION 311000 – SITE CLEARING

1.0 SCOPE OF WORK

1.1 Under this section of the Specifications, the Contractor shall provide all labor, tools, materials, and equipment required to perform all site clearing work including, but not limited to: topsoil stripping, structure, fencing, wall, fixture, appliance and equipment removals, asphalt removal, concrete removal, curbing removal, utility disconnections and removal, roadway and street removal, decorations removals, stone removal, masonry removals, timber and lumber removals, clearing, grubbing, tree stump and root removals, any and all man-made improvement removals, and in accordance with the Drawings and Specifications.

2.0 GENERAL REQUIREMENTS

2.1 The Contractor shall visit the site, prior to submitting his bid, inform himself of the conditions, and make his own estimates of the facilities and difficulties attending the execution of the work.

2.2 The Contractor shall be responsible for avoidance and cleanup of street spillage and tracking to the satisfaction of the local and state authorities, and the Owner.

2.3 The Contractor shall be responsible for dust control on and near the site and at all off-site waste areas if such dust is caused by the Contractor's operations or if resulting from the condition in which the Contractor leaves the site.

2.4 The Contractor shall be responsible for any and all dewatering as may be required to satisfactorily perform all work detailed on the drawings or specified herein.

2.5 The right to make any inspections deemed necessary at the source of supply, and during preparation of any material used in this work, is reserved by the Owner.

3.0 RELATED WORK SPECIFIED ELSEWHERE

3.1 Earthwork – See Section 312001.

3.2 Soil Erosion & Sediment Control – See Section 312500.

4.0 REGULATORY REQUIREMENTS

4.1 All clearing, grubbing, and stripping shall comply with all local, state, and federal regulations regarding erosion and sedimentation control.

4.2 Coordinate clearing work with utility companies.

5.0 MATERIALS

Not Applicable

6.0 EXECUTION

6.1 Clearing Site

A. Before demolition or soil remediation construction is begun in any area, the site of the Project shall be cleared within the limits of construction. The ground surface shall be cleared of all trees, brush, weeds, roots, matted leaves, small structures, debris, and other objectionable material, vegetation, and growth. Soil erosion and sediment control shall be in accordance with Spec 31 25 00.

B. All tree stumps shall be grubbed out within the limits of the project.

C. Trees, shrubs, and other landscape features within the limits of construction which do not interfere with the Project and are designated for preservation shall not be removed but shall be protected during the progress of the work.

D. Every necessary precaution shall be taken to prevent damage or injury to existing trees, plants, and other vegetation that are to remain within or adjacent to the Project.

E. At locations adjacent to operations performed by motorized equipment, a 4 foot high snow fence shall be erected and maintained around all trees, shrubs, and areas containing vegetation which are to be preserved.

6.2 Stripping of Topsoil

A. Excavate topsoil and organic surficial soils to a depth not to exceed 6 inches within the limits of work without mixing with foreign materials. If suitable, existing topsoil can be used for final grading.

B. Topsoil required in the final work shall be stockpiled on the site as directed by the Owner.

C. Stockpiles shall be constructed in such a manner that they will be well drained and will not impound water or impede the natural drainage.

D. All other topsoil and organic surficial soils shall be removed from the site.

6.3 Removal of Pipe, Inlets, and Manholes

A. Excavation for the removal of existing pipe, inlets, and manholes shall be in accordance with the following:

a) Before excavating, existing subsurface structures shall be located which may be affected by or interfere with the proposed construction. If directed, test pits shall be excavated to obtain the required information. Test pits or portions of a test pit shall be dug by hand when in close proximity to utilities or when directed. Test pits shall be backfilled in accordance with Subsection D-3.068.

b) The excavation shall be made in open cut and shall be of sufficient size to permit removal of the subsurface structure.

c) Excavations shall be shored, braced, and sheathed as conditions warrant. If close to existing pavement, sidewalks, curbs, pipes, railroads, or structures of any kind, the excavation shall be secured by sheet piling or other methods so that such facilities and structures are protected.

d) Boulders, logs, and any other debris encountered in the excavation shall be removed. When the material at the bottom of the excavation is unstable, it shall be removed and the space backfilled with granular material.

e) Bedding material shall not be placed until the depth of excavation and the material at the bottom of the excavation has been approved.

B. Excavation for subsurface structures shall conform to the following:

a) Pipes and Culverts. The width of trench shall be at least 18 inches greater than the outside diameter of the pipe or culvert.

b) Excavation for trenches in embankments shall not proceed until the embankment has been constructed to an elevation of at least 3 feet above the proposed top of the pipe or culvert.

c) Trench crossings shall be provided and maintained where necessary.

d) Structures Other Than Pipes and Culverts. When the material at the bottom of the excavation is rock or other hard material, it shall be cleaned of all loose material and cut to a level surface.

e) Backfill shall be made with excavated material in accordance with Spec 31 20 01.

f) Pipe and debris from removal of drainage structures, inlet and manhole castings shall be disposed of unless they are to be used on the Projects.

6.4 Removal of Sidewalks, Driveways, Curbs, and Gutters

A. Concrete sidewalks, driveways, macadam basecoat and surface coat covering contaminated soil, vertical curbs, sloping curbs, barrier curbs, and gutters, designated for removal, shall be disposed of. Damage to adjacent pavement layers caused by removal operations shall be repaired without additional compensation.

6.5 Removal of Underground Storage Tanks

A. Locations and types of underground storage tanks to be removed will be as shown on the plans.

B. All work performed to remove and dispose of underground petroleum product storage tanks and piping systems, to sample and analyze soils and water, to dispose of or recycle contaminated soils ,and to install and seal monitoring wells shall be in accordance with all appropriate municipal, State, and Federal regulations, and the following:

a) Permits and Approvals: The Contractor shall prepare and submit all documents to obtain all local permits and approvals necessary for this work. Tanks which are unregistered shall be registered by the Engineer. The charges to prepare the documents and the fees required for all permits, approvals, and registrations shall be paid by the Contractor.

b) An underground storage tank closure plan application and standard reporting form shall be prepared and submitted to the Project Manager for review prior to submit to the state. State approval must be received prior to commencing removal operations.

c) Contractor shall notify the Project Manager six weeks prior to the removal of underground tanks to allow for the Project Manager to obtain the EPA hazardous waste generator ID number for the tank contents.

d) The Contractor shall notify the appropriate county health official in writing, with a copy to the Project Manager no less than one week in advance of the underground storage tank removal.

e) The Contractor shall ensure that the waste disposal or recycling facility planned for receipt of the material is properly permitted to accept the material. A copy of the permit shall be submitted to the Project Manager one week prior to disposal or recycling.

f) Removal Operations: The Contractor shall monitor the site with an explosimeter to indicate the presence and concentration of flammable vapors and gas. Should it be determined through this test that unsafe working conditions exist, the Project Manager shall be notified and removal operations shall be immediately suspended until it is determined that conditions are acceptable for resuming work.

g) All liquids and sludge contained in the underground storage tanks and piping shall be removed prior to removing the tanks and associated piping systems from the ground and disposed of in accordance with the applicable hazardous waste regulations. Leakage from the tanks onto the surrounding soil shall be avoided by properly pumping the contents of the tanks into permitted transport vehicles. Should leakage or spillage occur, notification shall immediately be given to the Project Manager. The Contractor shall also notify the state and the county health department within 15 minutes. The Contractor shall be responsible for remediation of such leakage or spillage to the state's satisfaction in accordance with their investigation and corrective action requirements.

h) Tank removal operations shall result in the least disturbance to the soil surrounding the tanks. Excavations shall be fenced with approved snow fencing. All tanks shall be free of vapors prior to transportation off-site. Excavated tanks and piping systems shall be removed from the site and disposed of properly.

i) Should any evidence of discharge be apparent in the excavated hole, the Contractor shall notify the Project Manager and contact the state. The Contractor shall remove all free product contaminated soil from the excavation. Field tests to determine the extent of contaminated soils shall conform to the state requirements and shall be used to determine if

additional soils must be excavated. Post excavation soil sampling and analysis shall then be conducted at the limits of the excavation.

j) Prior to backfilling, any contaminated water not associated with ground water shall be removed and disposed of. When directed, the excavated hole shall be immediately backfilled.

k) Manifesting and Transporting: The Contractor shall determine the appropriate EPA or state hazardous waste code and shall be responsible for all labeling and placarding.

l) A uniform hazardous waste manifest (EPA FORM 8700-22) shall be completed by the waste hauler, as required by State Federal regulations. The Project Manager will sign this manifest as the generator. The appropriate number of generator copies of each manifest shall be given to the Project Manager before the shipment leaves the site.

m) Transportation of the contents of the tanks shall be performed by a transporter who has a valid hazardous waste transporter's permit. Vehicles hauling the contents of the tanks shall be check prior to leaving the site. No vehicle that is leaking shall be allowed to leave the site.

n) One copy of each uniform hazardous waste manifest shall be returned to the Project Manager within two business days after notification of receipt at the disposal facility. If notification of receipt of any waste shipment is not received by the Contractor within two weeks of departure from the site, the Contractor shall immediately notify the Project Manager and contract the disposal facility to determine the status of the shipment and resolve the discrepancy. Any manifest discrepancies shall be reported to the Project Manager and be resolved by the Contractor.

o) Storing Excavated Soil: Excavated soil shall be stockpiled on plastic sheeting having a minimum thickness of 6 mils. The stockpiled soil shall be covered with similar plastic sheeting which shall be held securely in place. The plastic sheeting shall be maintained or replaced as needed for as long as the material remains stockpiled. Stockpiles shall be located where excavation equipment can place the material directly from the excavation onto a stockpile. Where stockpiling of soil is not possible at the site, soil from the excavation shall be stockpiled at a site provided by the Contractor and approved by the Project Manager.

p) Excavated soil shall be stored in such a manner that the soil is completely isolated form the environment and any hazardous materials in the soil are prevented from contract with or being released into the environment. Periodic inspections shall be made by the Contractor to ensure that the stockpiled soils are not released to the surrounding environment by erosion. Stockpiled soil shall not be stockpiled for more than 90 days.

q) Composite soil sampling and analysis shall be conducted for the stockpiled soil. Stockpiled soil shall be analyzed by a state certified laboratory. Analyses shall also fulfill the requirements of the disposal facility.

r) Recycling and Disposal of Contaminated Soil: The recycling or disposal of contaminated soil shall be in accordance with State and Local regulations and the waste management plan of the district of origin.

s) The Contractor shall transport the contaminated soil to the recycling or disposal facility and shall obtain appropriate documentation which shall be provided to the Project Manager, the NDJEP, and the county of origin.

t) Monitoring Wells: Installation, sampling, and analyses shall comply with all applicable standards.

u) Upon receipt of approval from the Project Manager, the monitoring wells shall be sealed in accordance with all applicable standards.

6.6 Sealing of Abandoned Wells

A. Abandoned wells within the limits of clearing site shall be filled and sealed as follows:

a) Dug wells shall be filled in accordance with public health requirements.

b) Drilled wells shall be sealed in accordance with all applicable rules and regulations.

c) If an alternate method is proposed to seal the abandoned wells, written approval shall be secured from the agency with jurisdiction over said well and from the Project Manager.

6.7 Clean-Up

A. All paved areas being used by construction equipment and hauling operations shall be kept clean, free from mud and debris.

B. Upon completion of the work, all surplus materials, debris, tools, and equipment shall be removed from the site.

END OF SECTION 311000

SECTION 312001 – EARTHWORK

PART 1 - GENERAL

1.01 SUMMARY

A. Section Includes:
   1. Earth moving and excavation.
   2. Rock removal.
   3. Grading.
   4. Backfilling.
   5. Filling.
   6. Compacting.

B. Related Documents:
   1. None.

C. Related Sections:
   1. Section 321614 - Concrete Site Work

1.02 UNIT PRICES

A. Earth Excavation: Removal, reuse, and disposal of earth and other naturally occurring or man-made materials encountered other than materials classified as rock or unnecessary excavation.
   1. Payment: No separate payment will be made for earth excavation. The cost of earth excavation shall be included in the cost of general construction.

B. Rock Excavation: Excavation and disposal of rock material occurring as boulders or in beds, ledges, un-stratified masses, and conglomerate deposits and which cannot be removed by the excavating equipment referenced below without the aid of systematic drilling and blasting. Drilling or blasting in order to increase productivity will not be cause for classification of materials as rock excavation.
   1. Excavating equipment for trenches and pits: Late-model track-type excavator with a short stick, a rock bucket, and an operating weight of at least 40,000 pounds.
      a. Open excavation includes trenches over 10 feet wide and pits greater than 30 feet in length or width.
   2. Excavating equipment for open excavations: Late-model track-type loader with an operating weight of at least 50,000 pounds and a rock bucket having at least 41,000 pounds break-out force.
   3. Measurement: Perform rock excavation only after material has been cross-sectioned and classified, and after approval has been obtained.
   4. Measurement of rock excavation shall be the volume actually removed but shall in no case exceed the following:
      a. Two feet outside of concrete forms other than at footings.
      b. One foot outside of concrete forms for footings.
      c. Six inches outside of required minimum dimensions of concrete cast against grade.
      d. Required subgrade elevation beneath concrete slabs on grade, and allowing for capillary water barrier, where required.
      e. Trench depth, 6 inches beneath pipe inverts; trench width, the greater of pipe diameter plus two feet, or 42 inches.

5. Payment: Rock excavation will be paid on the basis of unit prices included in the contract documents. The unit price paid for rock excavation includes its replacement with approved materials.

1.03 REFERENCES

A. ASTM D 698-12 – Standard Test Method for Laboratory Compaction Characteristics of Soil Using Standard Effort (12,400 ft-lbf/ft3 (600 kN-m/m3)); 2021.

B. ASTM D 1556/D 155M-5E1 -- Standard Test Method for Density and Unit Weight of Soil in Place by the Sand-Cone Method; 2016.

C. ASTM D 2167-15 -- Standard Test Method for Density and Unit Weight of Soil In-Place by the Rubber Balloon Method; 2016.

D. ASTM D 2487-17E1 -- Standard Classification of Soils for Engineering Purposes (Unified Soil Classification System); 2020.

E. ASTM D 2922-91 -- Standard Test Methods for Density of Soil and Soil-Aggregate in Place by Nuclear Methods (Shallow Depth); 2017.

F. ASTM D 3017-05 -- Standard Test Method for Water Content of Soil and Rock in Place by Nuclear Methods (Shallow Depth); 1988 (Reapproved); 1993; 2017

1.04 SUBMITTALS

A. Product Data: Plastic marking tape.

B. Test Reports: Testing laboratory shall submit the following reports directly to the architect and shall copy the contractor:
1. Analysis of soil materials, whether procured on or off site, and including fill, backfill, and borrow materials.
2. In-place density test reports.
3. Moisture-density relationship test reports.
4. Compressive strength or bearing test reports.

C. Imported Fill Submittals:
1. Source location.
2. Soil classification.
3. Laboratory test results and gradation.
4. Required certifications demonstrating compliance with applicable regulations.
5. Additional documentation required by the Contact Documents or Authority Having Jurisdiction.

1.05 QUALITY ASSURANCE

A. Testing Laboratory Services:
1. Secure and pay for the services of a qualified, independent geotechnical engineer to classify existing soil materials, to recommend and to classify proposed borrow materials when necessary, to verify compliance of materials with specified requirements, and to perform required field and laboratory testing. Geotechnical engineer shall be acceptable to the architect and the owner and shall be licensed to practice in the state in which the project is located.

1.06 SITE CONDITIONS

A. Traffic: Do not interfere with or close public ways without permission of governing authorities. Do not interfere with adjacent private facilities.

B. Site Utilities:
   1. Advise utility companies of excavation activities before starting excavations. Locate and identify underground utilities passing through work area before starting work.
   2. If underground utilities are encountered in locations other than indicated, immediately advise utility owners before proceeding. Amend project record documents to show actual locations.
   3. Protect existing utilities indicated to remain.
   4. Do not interrupt existing utilities without advance notice to and written approval from the owner.

PART 2 - PRODUCTS

2.01 MATERIALS

A. Where sufficient approved materials are not available from required excavations on site, obtain and pay for materials from approved sources off site without charge to the owner.

B. For each soil material proposed for use as fill or backfill, whether obtained on or off site, testing laboratory shall classify soil material, develop Proctor curve, and perform any other tests required.

C. Obtain approval of the architect for each soil material.

D. Imported Fill:

   1. Imported fill shall consist of clean, uncontaminated material suitable for its intended use and free from organic matter, frozen material, trash, debris, demolition waste, deleterious substances, and other objectionable materials.
   2. Imported fill shall comply with all applicable Federal, State, and local regulations. For projects located within the State of New Jersey, imported fill shall comply with the applicable requirements of NJDEP, including N.J.A.C. 7:26E, or the latest adopted regulations governing clean fill.
   3. The Contractor shall submit the proposed source of imported fill, laboratory test results, gradation, soil classification, and any required certifications for review prior to delivery to the project site.
   4. No imported fill shall be delivered to the project until written approval has been received from the Architect/Engineer or Geotechnical Engineer, where applicable.
   5. Upon request, provide documentation identifying the source location of imported fill, including bills of lading, delivery tickets, certifications, or other documentation necessary to verify compliance with applicable regulations.

E. Backfill and Fill Materials: Materials classified as satisfactory.

F. Satisfactory Soil Material (ASTM D 2487): Free of stones larger than 2 inches in any dimension, trash, debris, organic material, other objectionable material and classified as follows:
   1. GW (well-graded gravel).
   2. GP (poorly graded gravel).

3. GM (silty gravel).
4. SW (well-graded sand).
5. SM (silty sand).

G. Unsatisfactory Soil Material (ASTM D 2487):
1. GC (clayey gravel).
2. SP (poorly graded sand).
3. SC (clayey sand).
4. CL (lean clay).
5. ML (silt).
6. OL (organic clay).
7. OL (organic silt).
8. CH (fat clay).
9. MH (elastic silt).
10. OH (organic clay).
11. OH (organic silt).
12. PT (peat).

H. Capillary Water Barrier: Clean, crushed rock or gravel or uncrushed gravel; 100 percent passing a 1-1/2-inch sieve; not more than 2 percent passing a No. 4 sieve.

I. Subbase Material: Well-graded, clean, sound, durable particles of crushed stone, crushed blast furnace slag, or crushed gravel, and screenings. Obtain the architect's approval of source, quality, and gradation.

J. Recycled Concrete Aggregate/Recycled Asphalt Pavement: The use of recycled concrete aggregate or recycled asphalt pavement, or any blend of these materials, with or without soil or quarry process stone shall not be permitted.

2.02 PLASTIC WARNING TAPE

A. Acid- and alkali-resistant polyethylene film specifically manufactured for marking and identifying underground utilities.
1. Minimum width, 6 inches; minimum thickness, 4 mils.
2. Metallic core encased in protective jacket against corrosion and detectable by metal detector when tape is buried 3 feet deep.
3. Continuous printed inscription shall describe utility.
Tape color:
a. Electric: Red.
b. Pipeline: Yellow.
c. Water system: Blue.
d. Sewer: Green.

PART 3 - EXECUTION

3.01 PREPARATION

A. Protection: Provide markers indicating limits of work and clear identification of items and areas requiring protection.

B. Protect existing structures, utilities, sidewalks, pavements, curbs, landscaping, and other improvements from damage caused by settlement, lateral movement, undermining, washout, vibration, or other hazards resulting from earthwork operations. Repair damage caused by earthwork operations at no additional cost to the Owner.

C. Provide barricades, warning signs, and warning lights around open excavations as necessary to prevent injury to persons.

D. The contractor is solely responsible for determining the potential for injury to persons and damage to property.
   1. Where such potential is present, take appropriate protective measures.
   2. Protect persons from injury and protect existing and new improvements from damage caused directly or indirectly by construction operations.

E. Do not allow excavation subgrades and soil at foundations to be subjected to freezing temperatures or frost. Provide protective insulating materials as necessary. Should prepared, compacted subgrades be damaged by freezing, remove soil materials to the depth required by the architect and replace and recompact in conformance with specified requirements.

3.02 EROSION CONTROL

A. To the maximum extent practicable, prevent erosion or displacement of soils and discharge of soil-bearing water runoff to adjacent properties and waterways.

B. Provide erosion control during the entire project in accordance with applicable regulations.

3.03 PROTECTION OF TREES

A. Provide temporary guards to protect trees and vegetation to remain. Place guards so as to prevent all forms of vehicular traffic or parking within drip lines.
   1. Do not allow excess foot traffic within drip lines.
   2. Do not stockpile construction materials, soil, or aggregates within drip lines.
   3. Water trees and other vegetation to remain within limits of the area of construction activities as required to maintain their health during course of construction operations.

B. Engage a qualified arborist to remove branches or roots to the extent required by this specification or shown on the drawings.

C. Excavate within drip line of trees only where indicated.

D. Where underground utilities must pass within drip line, hand-dig tunnels to avoid cutting main lateral roots and taproots. Minor roots may be cut only when necessary.
   1. Where root system is damaged or cut back, prune branches to maintain root/branch balance.

E. Immediately protect exposed roots until reestablishment in backfill. Cover with approved mulching material and keep continuously moist.

F. Raising Grades:
   1. Minor fills less than 6 inches: Place specified topsoil without compacting, and finish grade by hand.

G. Where cutting is required, cut branches and roots using properly sharpened tools and without breaking members.

H. Promptly repair any damaged trees to prevent death or loss of vigor.
   1. Where the contractor's operations result in dead or severely damaged trees, remove trees and provide new trees of similar size, except provide 6-inch-caliper trees to replace existing trees over 6 inches caliper.
      a. Species as selected by the architect.
   2. Do not add more than 2" of additional fill above the root system of existing trees. Any additional fill can result in the death of the tree.

3.04 DEWATERING

A. Do not allow surface or ground water to flow into or accumulate in excavations.

B. Do not allow water to flow in an uncontrolled fashion across the project site or to erode slopes or to undermine foundations. Do not allow water to be diverted onto adjacent properties. Arrange excavation operations so as to provide continual and effective drainage of excavations.

C. Provide and maintain temporary diversion ditches, dikes, and grading as necessary; do not use trench excavations for this purpose. When required by surface or subsurface water conditions, provide sumps, wellpoints, French drains, pumps, and other control measures necessary keep excavations free of water. When existence of ground water near or above final excavation level is indicated or suspected, provide control measures prior to excavating to water level and maintain water level continuously below working level.

3.05 EXCAVATION

A. Explosives: Do not use explosives.

B. General: Excavation includes the removal of any materials necessary to achieve the required subgrade elevations and includes reuse or disposal of such materials.

C. Unnecessary Excavation: The expense of excavation of materials outside of limits indicated or ordered in writing by the architect and the correction thereof to the satisfaction of the architect shall be borne by the contractor. Either place compacted fill or otherwise correct conditions, as required by the architect/engineer.

D. Approval of Subgrade: Notify the architect when required elevations have been reached.
   1. When required by the architect due to the unforeseen presence of unsatisfactory materials or other factors, perform additional excavation and replace with approved compacted fill material in accordance with the architect's instructions.
   2. Payment for unforeseen additional work will be made in accordance with established unit prices or, if none, in accordance with provisions for changes in the work. No payment will be made for correction of subgrades improperly protected against damage from freeze-thaw or accumulation of water, or for correction of otherwise defective subgrades.
   3. If unsuitable, unstable, pumping, soft, frozen, or otherwise unacceptable subgrade materials are encountered, notify the Architect/Engineer immediately. Do not place fill or construct improvements over unsuitable subgrade until corrective measures have been reviewed and approved by the Architect/Engineer. Corrective measures may include undercutting and replacement with approved structural fill, stabilization, geosynthetics, or other methods as directed by the Architect/Engineer.

E. Excavation Stabilization: Wherever it is possible to slope faces of excavations to achieve stabilization, do so in compliance with requirements of governing authorities. Otherwise, provide shoring and bracing.
   1. Design, provide, maintain, and remove shoring and bracing in compliance with requirements of governing authorities. Remove temporary shoring and bracing when stabilization is no longer required.

F. Excavation for Pavements: Excavate, shape, and compact to the lines, subgrade elevations, and cross sections indicated.

3.06 STORAGE

A. Stockpile materials to be used for filling and backfilling, including excavated materials classified as satisfactory soil materials, at locations indicated or as directed. Stockpile in a manner to freely drain surface water; cover if necessary to prevent wind-blown dust.
   1. Store soil materials without intermixing. Protect from contamination with other soils or debris.
   2. Do not stockpile materials inside of drip line of trees to remain.

3.07 PLASTIC WARNING TAPE

A. Install tape directly above utilities, 18 inches below finished grade

3.08 BACKFILLING

A. Preparation: Backfill excavations as soon as practicable. Complete the following operations before backfilling:
   1. Inspection and acceptance of below-grade construction.
   2. Inspection, testing, and approval of underground utilities.
   3. Surveying of underground utilities for record documents.
   4. Concrete formwork removal.
   5. Removal of loose material, muck, debris, and trash from excavation.
   6. Installation of temporary or permanent horizontal bracing for structures to receive backfill.

B. Remove temporary shoring and bracing as the work progresses and when its use is no longer necessary.

C. Installation: Place approved soil materials in layers to required elevations.
   1. Do not place material on muddy or frozen surfaces or on surfaces containing frost.

D. Installation: Place satisfactory soil materials in layers to required subgrade elevations.

E. Recycled Concrete Aggregate/Recycled Asphalt Pavement: The use of recycled concrete aggregate or recycled asphalt pavement, or any blend of these materials, with or without soil or quarry process stone shall not be permitted.

3.09 FILL

A. General: All areas to receive fill shall be leveled. The surface shall be free from ruts, hummocks, or other uneven features which would tend to prevent uniform compaction by the equipment utilized. If placed, the stone drainage blanket shall consist of 3/4" size crushed stone and be uniformly spread over the bottom of the excavation. The average thickness of the drainage blanket shall be 15”. Sump pits shall be set as required to control

the water level in the blanket. Pumps shall be used to maintain the water level a minimum of 12” below the surface of the fill. Material for controlled fill in building areas and extending five feet beyond the building limits shall preferably consist of clean sand and/or gravel, free of vegetable matter or other deleterious substances. The sand and/or gravel shall be well graded and shall contain no more than 70% by weight of material finer than the No. 30 sieve and no more than 15% by weight or material finer than the No. 200 sieve. Boulders and cobbles having a maximum diameter exceeding six inches shall be excluded from the fill material. Place acceptable soil material in layers to required subgrade elevations, for each area classification listed below.

In excavations, use satisfactory excavated or borrow material.

Under grassed areas, use satisfactory excavated or borrow material.

Under building slabs, use drainage fill material.

Under piping and conduit, use subbase material where subbase is indicated under piping or conduit; shape to fit bottom 90 degrees of cylinder.

Underground electrical conduit, encase -the conduit in 1' of white sand.

Backfill excavations as promptly as work permits, but not until completion of the following:

Acceptance of construction below finish grade including, where applicable, damp-proofing, waterproofing and perimeter insulation.

Inspection, testing, approval, and recording locations of underground utilities.

Removal of concrete formwork.

Removal of trash and debris.

B. Ground Surface Preparation: Remove vegetation, debris, unsatisfactory soil materials, obstructions, and deleterious materials from ground surface prior to placement of fills.

Prior to placing fill on existing slopes steeper than one vertical to four horizontal (1V:4H), plow, strip, scarify, bench, or otherwise prepare the existing slope as necessary to ensure adequate bond between the existing ground and proposed fill.

When existing ground surface has a density less than that specified under "Compaction" for particular area classification, break up ground surface, pulverize, moisture-condition to optimum moisture content, and compact to required depth and percentage of maximum density.

C. Placement and Compaction: Place backfill and fill materials in layers not more than 8” in loose depth for material compacted by heavy compaction equipment, and not more than 4” in loose depth for material compacted by hand-operated tampers.

Before compaction, moisten or aerate each layer as necessary to provide optimum moisture content. Compact each layer to required percentage of maximum dry density or relative dry density floor each area classification. Do not place backfill or fill material on surfaces that are muddy, frozen, or contain frost or ice.

The surface of the fill shall be kept at a slight slope to facilitate drainage of any ground or surface water which enters the excavation. Sump pits and pumps shall be used, if required, to maintain the fill in a reasonably dry condition.

After each layer has been placed and spread evenly, it shall be thoroughly compacted to an average value of 95% of the maximum Modified Proctor density of the soil being utilized within the building areas and extending five feet beyond the building limits in all directions. No individual test values shall be acceptable if they are below 90%. If required, the maximum density of the material shall be determined by a Soils Engineer in accordance with the American Society for Testing and Materials (ASTM) D 1557, latest edition. Cost for testing will be borne by the contractor at no additional cost to the owner.

A smooth-wheeled vibratory compactor should provide the most suitable means of compaction of essentially non-cohesive granular soils. Small, portable rammer or vibratory plate compactors should be utilized within five feet of existing walls.

Sufficient passes of approved compactor shall be made in order to obtain the specified densities. A minimum of three passes of the compactor shall be required over all portions of each lift. A "pass" shall be defined as one passage of the contact portion of the compactor over the entire surface of the layer.

Place backfill and fill materials evenly adjacent to structures, piping or conduit to required elevations. Take care to prevent wedging action of backfill against structures or displacement of piping or conduit by carrying material uniformly around structure, piping or conduit to approximately same elevation in each lift.

3.10 PAVEMENT SUBBASE COURSE PLACEMENT

A. Place lifts such that compaction true to grade and level is accomplished with a minimum of surface disturbance and segregation or degradation of materials. Maintain grade control and cross section by means of line and grade stakes. Maintain moisture content within prescribed limits during placing and compacting.

B. When the total thickness of subbase is less than the maximum lift thickness permitted, place material in a single lift. When the total thickness of subbase is greater than the maximum lift thickness permitted, place materials in two or more lifts of uniform thickness with no lift less than 3 inches in thickness.

C. Place material along the edges of the subbase course so as to maintain compaction of the subbase course. Construct at least a 1-foot width of shoulder simultaneously with each lift of the subbase course.

D. Cut any overbuild to grade. Should top elevation be lower than allowable tolerances, scarify to a depth of 3 inches, add new material, and recompact to bring to grade within required tolerances.

3.11 COMPACTION

A. Place materials used in backfilling and filling in layers not exceeding loose depths as follows:
   1. Heavy equipment compaction: 8 inches.
   2. Hand-operated tampers: 4 inches.

B. Place material simultaneously on opposite sides of walls, small structures, utility lines, etc. to avoid displacement or overstressing.

C. In-Place Density Requirements: Compact soil to not less than the values given below, expressed as a percentage of maximum density at optimum moisture content.
   1. Unpaved areas: Top 6 inches of subgrade and subsequent lifts:
      a. 90 percent.
   2. Paved areas: Top 12 inches of subgrade and subsequent lifts:
      a. 95 percent.
   3. Exterior steps and ramps: Top 8 inches of subgrade and subsequent lifts:
      a. 95 percent.

D. Moisture Control: During compaction, control moisture subgrades and subsequent lifts to within tolerances from optimum moisture content as recommended by testing laboratory. Wet surface with water when additional moisture is required. Aerate soil to aid in drying or replace soil when excessive moisture is present.

3.12 GRADING

A. General: Smooth grade to a uniform surface that complies with compaction requirements and required lines, grades, and cross sections and is free from irregular surface changes.

B. Provide smooth transition between existing adjacent grades and changed grades. Cut out soft spots, fill low spots, and cut down high spots to conform to required surfaces tolerances.

C. Slope grades to direct water away from structures and to prevent ponding. Finish subgrade to required elevations within the following tolerance:
   1. Unpaved areas: Plus or minus 0.10 foot.
   2. Paved areas: Plus or minus 0.05 foot.
   3. Exterior steps and ramps: Plus or minus 0.05 foot.
   4. Inside building lines: 1/2 inch as measured with a 10-foot straightedge.

3.13 PROOF ROLLING

A. After completion of required compaction and immediately prior to proceeding with subsequent construction, proof roll in the presence of testing laboratory representative.

B. Proof roll using a heavy pneumatic-tired vehicle having four tires abreast, each tire loaded to 30,000 pounds and tire inflated to 150 psi. Provide 30 coverages of the area to be proof rolled, one coverage being defined as the application of one tire print over the entire area. Maintain optimum moisture content during proof rolling. In areas which show pumping or which are otherwise unsatisfactory, undercut fill material and replace with compacted fill, or stabilize in place, as required by the architect.

C. Proof roll Areas to Receive:
   1. Pavement.

3.14 EXCAVATION FOR TRENCHES

A. Dig trenches to the uniform width required for particular item to be installed, sufficiently wide to provide ample working room. Provide 6” to 9” clearance on both sides of pipe or conduit.

B. Excavate trenches to depth indicated or required. Carry depth of trenches for piping to establish indicated flow lines and invert elevations. Beyond building perimeter, keep bottoms of trenches sufficiently below finish grade to avoid freeze-ups.

C. Where rock is encountered, carry excavation 6” below required elevation and backfill with a 6” layer of crushed stone or gravel prior to installation of pipe.

D. For pipes or conduit 5” or less in nominal size and for flat-bottomed multiple-duct conduit units, do not excavate beyond indicated depths. Hand excavate bottom cut to accurate elevations and support pipe or conduit on undisturbed soil.

E. For pipes or conduit 6” or larger in nominal size, and electrical work indicted to receive subbase, excavate to subbase depth indicated, or, if not otherwise indicated, to 6” below bottom of work to be supported.

F. Except as otherwise indicated, excavate for exterior water-bearing piping (water drainage) so top of piping is not less than 3’ below finished grade.

G. Grade bottoms of trenches as indicated, notching under pipe bells to provide solid bearing for entire body of pipe.

H. Do not backfill trenches until tests and inspections have been made and backfilling authorized by Engineer. Use care in backfilling to avoid damage or displacement of pipe systems.

3.15 FIELD QUALITY CONTROL

A. Testing Laboratory Services: Provide timely notice to testing laboratory. Do not proceed with construction until testing of each subgrade and lift of fill or backfill has been performed and required inspections and approvals have been obtained.

B. Maximum Density at Optimum Moisture Content: Determine in accordance with ASTM D 698.
   1. For each subgrade, fill, and backfill material, perform one moisture-density relationship test for each 1500 cubic yards, or fraction thereof, of material used.

C. In-Place Density Tests: ASTM D 1556 (sand cone method), ASTM D 2167 (rubber balloon method), or ASTM D 2922 (nuclear method), as applicable.
   1. When ASTM D 2922 is used, check and adjust calibration curves using ASTM D 1556 only. ASTM D 3017 shall be performed to measure water content of soil at the time in-place density tests are conducted. Calibrate density and moisture gages at the start of testing on each type of material encountered and at intervals as directed.

D. Areas under Slabs and Pavements: Conduct not less than one in-place density test of subgrade and one in-place density test of each compacted fill or backfill layer for every 2000 square feet of overlying paved area, but in no case less than 3 tests per lift.

E. If testing service reports indicate that subgrade or fills are below specified density, scarify or remove and replace to the required depth, recompact, and retest at no cost to the owner.

F. Lab and field testing costs to be paid for by the Contractor.

3.16 MAINTENANCE

A. Completed Areas: Protect from damage by pedestrian or vehicular traffic, freezing, erosion, and contamination with foreign materials.
   1. Repair and re-establish grades to specified tolerances in settled, eroded, or rutted areas.

B. Damaged Areas: Where completed or partially completed surfaces become eroded, rutted, settled, or lose compaction and whether due to subsequent construction operations or weather conditions, restore materials to required conditions: Scarify or remove and replace to the required depth, return to optimum moisture content, and compact materials to the required density before continuing construction.

C. Correction: Should settling occur within the project correction period, remove finished surfacing, add additional approved material, compact material, and reconstruct surfacing. Construct surfacing to match and blend in with adjacent surfacing as nearly as practicable.

3.17 DISPOSAL OF EXCESS AND WASTE MATERIALS

A. Remove any material not required for use on the project (including unsatisfactory soil, excess satisfactory soil, milled or removed pavement, removed concrete, trash, and debris) and legally dispose of it off the owner's property.

3.18 QUALITY ASSURANCE

A. Safety Codes and Standards: Perform earthwork and site grading work in compliance with the applicable requirements of governing authorities having jurisdiction.

B. Provide and maintain barricades, signs, lights, etc., required for the protection of personnel, tenants, the public, materials, etc. Barricades where applicable shall conform to all the local codes and regulations and shall be removed upon completion of the contract.

C. The Contractor shall be solely responsible for stability of excavation and shall provide all sheathing, lagging, bracing, etc., required to retain the excavations and to prevent slides sloughs..

END OF SECTION 312001

SECTION 312318 - SITE TRENCHING

PART 1 - GENERAL

1.01 SECTION INCLUDES

A. Trench excavation, backfill and compaction of underground piping and underdrainage.

1.02 RELATED SECTIONS

A. Section 334600 – Storm Utility Drainage

B. Section 334200 – Subdrainage

C. Section 312001 – Earthwork

1.03 SUBMITTALS

A. Comply with the requirements of Division 01 – Submittal Procedures and as modified below.

B. Backfill Product Data: Submit test reports for each type of gravel and/or stone specified for backfill naming the source of each material. Submit evidence that each backfill material complies with Department of Transportation standard specifications for the materials specified.

C. Quality Control Submittals

1. Experience Listing: Submit a list of completed projects similar to this project, including owner's contact information and telephone number for each project.

D. Closeout Procedures: Comply with the requirements of Division 01.

1.04 QUALITY ASSURANCE

A. Regulatory Requirements: Obtain written permission from applicable agencies prior to the start of construction. Submit one copy of the permit as specified in "Submittals-Quality Control Submittals" above.

1.05 PROJECT CONDITIONS

A. Field Measurements: Establish and maintain required lines and elevations for grade control.

1.06 SEQUENCING AND SCHEDULING

A. Proceed with and complete trenching operations as rapidly as portions of the site become available, working within seasonal limitations for the work required.

PART 2 - PRODUCTS

2.01 MATERIALS

A. Excavated Material: Utilize on-site excavated materials consisting of loam, clay, sand, gravel or other material suitable for backfilling as approved by the Project Designer when the type of backfill material is not indicated on the Contract Documents.

B. Sand: Natural bank sand complying with the following gradation requirements:

1. 100% passing the ¾" sieve
2. Less than 5% passing the Number 200 sieve.

C. Select Type 1 Granular Material: Where indicated supply stockpiled, sound, durable, sand, gravel, stone, or blends of these materials, free from organic and other deleterious materials. Comply with New Jersey State Department of Transportation gradation and material requirements specified below:

Sieve		Percent Passing
Sieve Size	Size opening (mm)	
3 inch	76.2	100
2 inch	50.8	90-100
1/4 inch	6.35	30-65
No. 40	0.425	5-40
No. 200	0.075	0-10

D. Bedding Material: Mixture of 50% No. 1 and 50% No. 2 stone complying with the following New Jersey State Department of Transportation Standard Specifications:

No. 1 Stone Gradation Requirements

Sieve		Percent Passing
Sieve Size	Size opening (mm)	
1 inch	25.4	100
1/2 inch	12.70	90-100
1/4 inch	6.35	0-15
No. 200	0.075	0-1

No. 2 Stone Gradation Requirements

Sieve		Percent Passing
Sieve Size	Size opening (mm)	
1 ½ inch	38.1	100
1 inch	25.4	90-100
1/2 inch	12.7	30-65
No. 200	0.075	0-10

PART 3 - EXECUTION

3.01 EXAMINATION

A. Installer Verification of Conditions: Examine conditions under which trenching operations are to occur with the materials and components specified in this section. Affected Prime Contractors, the Owner's Representative and the Project Designer shall be notified in writing of any conditions detrimental to the proper and timely installation of the work.

1. When the installer confirms conditions as being acceptable to ensure proper and timely installation of the work and to ensure requirements of applicable warranties or guarantees

can be satisfied, submit written confirmation to the Project Designer. Failure to submit written confirmation and subsequent installation will be assumed to indicate conditions are acceptable to the installer.

3.02 EXCAVATION

A. Excavate trenches to line and depth as indicated on the Contract Documents. Provide consistent, uniform support for the bottom quadrant of each section of piping, fittings and associated materials.

1. Excavate no more than length of trench that can receive infrastructure installation and backfill.
2. Brace and drain trenches as required. Accumulations of groundwater or storm runoff shall be immediately discharged by dewatering pumps to siltation basins or protected channels, drains or storms sewers.
3. Provide adequate trench width to permit successful laying and joining of pipe, proper placement of backfill and clearance of at least 8” on either side of the pipe barrel.
4. Prepare the finish grade of the trench bottom with hand tools. Where elevations are not shown on the Contract Documents, excavate the trench to place a minimum of 18” of fill above the top of the pipe. Provide “bell holes” at each pipe joint for proper joining to eliminate point bearing. Stones of 2” or greater in any dimension or as recommended by the pipe manufacturer, whichever is smaller, shall be removed to avoid point bearing.
5. Where trench excavation is carried below the specified elevation as a result of Contractor error or negligence, backfill the trench with Select Type 1 Granular Material and compact to required densities at no cost to the Owner.
6. When trenching is required within the dripline of trees, tunnel under or around roots by hand digging. Do not cut tap roots or main lateral roots.

B. Rock Excavation: Comply with the requirements outlined in Specification 31 20 01 - Earthwork.

C. Excavated Materials

1. Materials satisfactory for backfilling shall be stockpiled in an orderly manner at a distance from the banks of the trench sufficient to avoid overloading and to prevent slides and cave-ins.
2. Adequate drainage shall be provided for the stockpiles and surrounding areas by means of ditches, dikes and other approved methods.
3. Stockpiles shall be protected from contamination with unsatisfactory excavated material or other material that destroy the quality and fitness of the stockpiled material. If the Contractor fails to protect the stockpiles and any material becomes unsatisfactory as a result, such material shall be removed and replaced with satisfactory on site or imported materials from approved sources at no additional cost to the Owner.
4. Excavated material not required or not satisfactory for backfill shall be removed from the site.

3.03 BACKFILLING

A. Trench Backfill: Trenches shall be backfilled to grade upon completion of required testing work.

B. Bedding and Initial Backfill: Bedding shall be of the type and thickness as indicated on the Contract Documents or as recommended by the pipe manufacturer.

1. Initial backfill material shall be placed in layers of a maximum of 8” loose thickness and compacted with approved tampers to the density of the adjacent in-situ soil, and to a height

of at least one foot above the utility pipe, conduit or other infrastructure item. The backfill shall be brought up evenly on both sides of the pipe for the full length of the pipe.

2. Care shall be taken to ensure thorough compaction of the fill under the haunches of the pipe.

C. Final Backfill: The remainder of the trench shall be backfilled with satisfactory material removed from the trench. Backfill material shall be deposited and compacted as follows:

1. Under building slabs, roads, walks, parking lots and other structural areas, backfill shall be deposited in maximum 8” loose thickness layers and compacted to 95% maximum dry density at +/-2% of optimum moisture content.
2. Under tracks, tennis courts and other structural athletic areas, backfill shall be deposited in maximum 8” loose thickness layers and compacted to 95% maximum dry density at +/-2% of optimum moisture content.
3. Under synthetic turf playfield areas, backfill shall be deposited in maximum 8” loose thickness layers and compacted to 95% maximum dry density at +/-2% of optimum moisture content.
4. Under general landscape and natural turf playfield areas, backfill shall be deposited in maximum 12” loose thickness layers and compacted to 95% maximum dry density at +/-2% of optimum moisture content.

3.04 FIELD QUALITY CONTROL

A. Testing

1. The Owner may provide soil testing and inspection services during the backfill of trenches as outlined in Project Manual Section 01 40 00 – Quality Requirements.
2. Prime Contractors shall employ the services of an independent testing agent to observe and test backfill operations performed by other Prime Contractors that may affect their work. An independent testing laboratory shall certify that the backfill is suitable for finish construction to be installed over trenches.
3. Prime Contractors shall submit copies of testing laboratory reports to the Owner’s Representative and the Project Designer for information only.
4. The General Work and Site Work Prime Contractors shall accept in writing any trench backfill and compaction by other prime contractors before installing the remaining finish construction over trench work.

END OF SECTION 312318

SECTION 312319 – DEWATERING

PART 1 - GENERAL

1.1 GENERAL

A. Prevent surface water and subsurface or ground water from flowing into excavations and from flooding project site and surrounding area. Dewatering shall be included in the project bid price. Separate payment will not be made for dewatering.

B. The contractor shall furnish sufficient pumping or other dewatering equipment and shall provide, at his own expense, satisfactory drainage whenever needed to the trench and other excavation during the progress of the work and at its completion for final inspection. No structures or pipe sewers shall be laid in water, and water shall not be allowed to flow over or raise upon any concrete, masonry, or pipe sewers until the work has been inspected and the mortar or concrete has properly set.

C. Do not allow water to accumulate in excavations. Remove water to prevent softening of foundation bottoms, undercutting footings, and soil changes detrimental to stability of subgrades and foundations. Provide and maintain pumps, well points, sumps, suction and discharge lines, and other dewatering system components necessary to convey water away from excavations.

D. Establish and maintain temporary drainage ditches and other diversions outside excavation limits to convey rain water and water removed from excavations to collecting or run-off areas. Do not use trench excavations as temporary drainage ditches.

E. Where a continuous flow of water into the trenches causes a soft condition and where pumping cannot dry and prevent the flow of water in the trench, the contractor shall furnish, install, and maintain an efficient well point system.

F. Materials and workmanship used for the wellpoint system shall be in keeping with approved standard practice. The wellpoint system shall function so as to enable pipe, concrete foundations, and appurtenances to be installed without interference from running or standing water at the bottom of the excavation. The engineer shall make the final decision as to the acceptability of the wellpoint system or any part thereof.

G. Where necessary, pea gravel or graded sand shall be used in conjunction with the wellpoints as they are installed to insure continuous pumping in dewatering fine material.

H. The wellpoint system shall be operated after the structures have been installed, as long as necessary, in order to construct manholes, install pipe and/or properly install the footings and foundations.

1.2 DISPOSAL OF WATER

A. All water pumped or bailed from the trench or other excavation shall be conveyed in a proper manner to a suitable point of discharge by the contractor at his own expense.

END OF SECTION 312319

SECTION 312500 - SOIL EROSION AND SEDIMENT CONTROL

PART 1 - GENERAL

1.1 DESCRIPTION OF WORK

A. The contractor shall comply with all soil erosion and sediment control practices in accordance with the “New Jersey State Standards for Soil Erosion and Sediment Control” (latest edition), and as directed by the local Soil Conservation District representative and the engineer.

END OF SECTION 312500

SECTION 315000 - EXCAVATION SUPPORT AND PROTECTION

PART 1 - GENERAL

1.1 RELATED DOCUMENTS

A. Drawings and general provisions of the Contract, including General and Supplementary Conditions, apply to this Section.

1.2 SUMMARY

A. Section includes temporary excavation support and protection systems.

1.3 INFORMATIONAL SUBMITTALS

A. Record Drawings: Identify locations and depths of capped utilities, abandoned-in-place support and protection systems, and other subsurface structural, electrical, or mechanical conditions.

1.4 FIELD CONDITIONS

A. Interruption of Existing Utilities: Do not interrupt any utility serving facilities occupied by Owner or others unless permitted under the following conditions and then only after arranging to provide temporary utility according to requirements indicated:

1. Notify Owner no fewer than two days in advance of proposed interruption of utility.
2. Do not proceed with interruption of utility without Owner's written permission.

B. Survey Work: Engage a qualified land surveyor or professional engineer to survey adjacent existing buildings, structures, and site improvements; establish exact elevations at fixed points to act as benchmarks. Clearly identify benchmarks and record existing elevations.

PART 2 - PRODUCTS

2.1 PERFORMANCE REQUIREMENTS

A. Provide, design, monitor, and maintain excavation support and protection system capable of supporting excavation sidewalls and of resisting earth and hydrostatic pressures and superimposed and construction loads.

1. Contractor Design: Design excavation support and protection system, including comprehensive engineering analysis by a qualified professional engineer.
2. Prevent surface water from entering excavations by grading, dikes, or other means.
3. Install excavation support and protection systems without damaging existing buildings, structures, and site improvements adjacent to excavation.
4. Continuously monitor vibrations, settlements, and movements to ensure stability of excavations and constructed slopes and to ensure that damage to permanent structures is prevented.

PART 3 - EXECUTION

3.1 PREPARATION

A. Protect structures, utilities, sidewalks, pavements, and other facilities from damage caused by settlement, lateral movement, undermining, washout, and other hazards that could develop during excavation support and protection system operations.

1. Shore, support, and protect utilities encountered.

B. Install excavation support and protection systems to ensure minimum interference with roads, streets, walks, and other adjacent occupied and used facilities.

1. Do not close or obstruct streets, walks, or other adjacent occupied or used facilities without permission from Owner and authorities having jurisdiction. Provide alternate routes around closed or obstructed traffic ways if required by authorities having jurisdiction.

C. Locate excavation support and protection systems clear of permanent construction so that construction and finishing of other work is not impeded.

3.2 SOLDIER PILES AND LAGGING

A. Install wood lagging within flanges of soldier piles as excavation proceeds. Trim excavation as required to install lagging. Fill voids behind lagging with soil, and compact.

B. Install wales horizontally at locations indicated on Drawings and secure to soldier piles.

3.3 FIELD QUALITY CONTROL

A. Promptly correct detected bulges, breakage, or other evidence of movement to ensure that excavation support and protection system remains stable.

B. Promptly repair damages to adjacent facilities caused by installation or faulty performance of excavation support and protection systems.

3.4 REMOVAL AND REPAIRS

A. Remove excavation support and protection systems when construction has progressed sufficiently to support excavation and earth and hydrostatic pressures. Remove in stages to avoid disturbing underlying soils and rock or damaging structures, pavements, facilities, and utilities.

1. Repair or replace, as approved by Architect, adjacent work damaged or displaced by removing excavation support and protection systems.

END OF SECTION 315000

SECTION 321216 – BITUMINOUS ASPHALT PAVING

PART 1 - GENERAL

1.1 RELATED DOCUMENTS

A. Drawings and general provisions of the Contract, including General and Supplementary Conditions and Division 01 Specification Sections, apply to this Section.

1.2 SUMMARY

A. Section Includes:

1. Hot-mix asphalt paving.

B. Related Requirements:

1. Division 31 related sections for subgrade preparation, fill material, unbound-aggregate subbase and base courses, and aggregate pavement shoulders.

1.3 ACTION SUBMITTALS

A. Product Data: For each type of product.

1. Include technical data and tested physical and performance properties.

2. Job-Mix Designs: Certification, by authorities having jurisdiction, of approval of each job mix proposed for the Work.

1.4 INFORMATIONAL SUBMITTALS

A. Field quality-control reports.

1.5 QUALITY ASSURANCE

A. Manufacturer Qualifications: A paving-mix manufacturer registered with and approved by authorities having jurisdiction or the DOT of state in which Project is located.

B. Testing Agency Qualifications: Qualified according to ASTM D 3666 for testing indicated.

C. Regulatory Requirements: Comply with materials, workmanship, and other applicable requirements of Standard Specification of New Jersey Department of Transportation for asphalt paving work.

1. Measurement and payment provisions and safety program submittals included in standard specifications do not apply to this Section.

1.6 FIELD CONDITIONS

A. Environmental Limitations: Do not apply asphalt materials if subgrade is wet or excessively damp, if rain is imminent or expected before time required for adequate cure, or if the following conditions are not met:

1. Prime Coat: Minimum surface temperature of 60 deg F

2. Tack Coat: Minimum surface temperature of 60 deg F.

3. Slurry Coat: Comply with weather limitations in ASTM D 3910.

4. Asphalt Base Course: Minimum surface temperature of 40 deg F and rising at time of placement.

5. Asphalt Surface Course: Minimum surface temperature of 60 deg F at time of placement.

PART 2 - PRODUCTS

2.1 AGGREGATES

A. General: Use materials and gradations that have performed satisfactorily in previous installations.

B. Coarse Aggregate: ASTM D 692/D 692M, sound; angular crushed stone, crushed gravel, or cured, crushed blast-furnace slag.

C. Fine Aggregate: AASHTO M 29, sharp-edged natural sand or sand prepared from stone, gravel, cured blast-furnace slag, or combinations thereof.

1. For hot-mix asphalt, limit natural sand to a maximum of 20 percent by weight of the total aggregate mass.

D. Mineral Filler: AASHTO M 17, rock or slag dust, hydraulic cement, or other inert material.

E. Recycled Concrete Aggregate: The use of recycled concrete aggregate or recycled asphalt pavement, or any blend of these materials, with or without soil or quarry process stone shall not be permitted.

2.2 ASPHALT MATERIALS

A. Asphalt Cement: ASTM D 3381/D 3381M for viscosity-graded material.

B. Water: Potable.

C. Recycled Asphalt Pavement: The use of recycled concrete aggregate or recycled asphalt pavement, or any blend of these materials, with or without soil or quarry process stone shall not be permitted.

2.3 AUXILIARY MATERIALS

A. Sand: AASHTO M 29, Grade No. 2 or No. 3.

2.4 MIXES

A. Hot-Mix Asphalt: Dense-graded, hot-laid, hot-mix asphalt plant mixes approved by authorities having jurisdiction and complying with the following requirements:

1. Provide mixes with a history of satisfactory performance in geographical area where Project is located.

2. Base Course: Superpave Mix 19M64 or Marshall Mix I-2.

3. Surface Course: Superpave Mix 9.5M64 or Marshall Mix I-5.

PART 3 - EXECUTION

3.1 EXAMINATION

A. Verify that subgrade is dry and in suitable condition to begin paving.

B. Proof-roll subgrade below pavements with heavy pneumatic-tired equipment to identify soft pockets and areas of excess yielding. Do not proof-roll wet or saturated subgrades.

1. Completely proof-roll subgrade in one direction, repeating proof-rolling in direction perpendicular to first direction. Limit vehicle speed to 3 mph.

2. Proof roll with a loaded 10-wheel, tandem-axle dump truck weighing not less than 15 tons.

3. Excavate soft spots, unsatisfactory soils, and areas of excessive pumping or rutting, as determined by Architect, and replace with compacted backfill or fill as directed.

C. Proceed with paving only after unsatisfactory conditions have been corrected.

3.2 SURFACE PREPARATION

A. General: Immediately before placing asphalt materials, remove loose and deleterious material from substrate surfaces. Ensure that prepared subgrade is ready to receive paving.

B. Emulsified Asphalt Prime Coat: Apply uniformly over surface of compacted unbound-aggregate base course at a rate of 0.10 to 0.30 gal./sq. yd. per inch depth. Apply enough material to penetrate and seal, but not flood, surface. Allow prime coat to cure.

1. If prime coat is not entirely absorbed within 24 hours after application, spread sand over surface to blot excess asphalt. Use enough sand to prevent pickup under

traffic. Remove loose sand by sweeping before pavement is placed and after volatiles have evaporated.

2. Protect primed substrate from damage until ready to receive paving.

3.3 PLACING HOT-MIX ASPHALT

A. Machine place hot-mix asphalt on prepared surface, spread uniformly, and strike off. Place asphalt mix by hand in areas inaccessible to equipment in a manner that prevents segregation of mix. Place each course to required grade, cross section, and thickness when compacted.

1. Place hot-mix asphalt base course in number of lifts and thicknesses indicated.

2. Place hot-mix asphalt surface course in single lift.

3. Spread mix at a minimum temperature of 250 deg F.

4. Begin applying mix along centerline of crown for crowned sections and on high side of one-way slopes unless otherwise indicated.

5. Regulate paver machine speed to obtain smooth, continuous surface free of pulls and tears in asphalt-paving mat.

B. Place paving in consecutive strips not less than 10 feet wide unless infill edge strips of a lesser width are required.

1. After first strip has been placed and rolled, place succeeding strips and extend rolling to overlap previous strips. Overlap mix placement about 1 to 1-1/2 inches from strip to strip to ensure proper compaction of mix along longitudinal joints.

2. Complete a section of asphalt base course before placing asphalt surface course.

C. Promptly correct surface irregularities in paving course behind paver. Use suitable hand tools to remove excess material forming high spots. Fill depressions with hot-mix asphalt to prevent segregation of mix; use suitable hand tools to smooth surface.

3.4 JOINTS

A. Construct joints to ensure a continuous bond between adjoining paving sections. Construct joints free of depressions, with same texture and smoothness as other sections of hot-mix asphalt course.

1. Clean contact surfaces and apply tack coat to joints.

2. Offset longitudinal joints, in successive courses, a minimum of 6 inches.

3. Offset transverse joints, in successive courses, a minimum of 24 inches.

4. Construct transverse joints at each point where paver ends a day's work and resumes work at a subsequent time. Construct these joints using either "bulkhead" or "papered" method according to AI MS-22, for both "Ending a Lane" and "Resumption of Paving Operations."

5. Compact joints as soon as hot-mix asphalt will bear roller weight without excessive displacement.

6. Compact asphalt at joints to a density within 2 percent of specified course density.

3.5 COMPACTION

A. General: Begin compaction as soon as placed hot-mix paving will bear roller weight without excessive displacement. Compact hot-mix paving with hot, hand tampers or with vibratory-plate compactors in areas inaccessible to rollers.

1. Complete compaction before mix temperature cools to 185 deg F

B. Breakdown Rolling: Complete breakdown or initial rolling immediately after rolling joints and outside edge. Examine surface immediately after breakdown rolling for indicated crown, grade, and smoothness. Correct laydown and rolling operations to comply with requirements.

C. Intermediate Rolling: Begin intermediate rolling immediately after breakdown rolling while hot-mix asphalt is still hot enough to achieve specified density. Continue rolling until hot-mix asphalt course has been uniformly compacted to the following density:

1. Average Density: 96 percent of reference laboratory density according to AASHTO T 245, but not less than 94 percent or greater than 100 percent.

2. Average Density: 92 percent of reference maximum theoretical density according to ASTM D 2041, but not less than 90 percent or greater than 96 percent.

D. Finish Rolling: Finish roll paved surfaces to remove roller marks while hot-mix asphalt is still warm.

E. Edge Shaping: While surface is being compacted and finished, trim edges of pavement to proper alignment. Bevel edges while asphalt is still hot; compact thoroughly.

F. Repairs: Remove paved areas that are defective or contaminated with foreign materials and replace with fresh, hot-mix asphalt. Compact by rolling to specified density and surface smoothness.

G. Protection: After final rolling, do not permit vehicular traffic on pavement until it has cooled and hardened.

H. Erect barricades to protect paving from traffic until mixture has cooled enough not to become marked.

3.6 INSTALLATION TOLERANCES

A. Pavement Thickness: Compact each course to produce the thickness indicated within the following tolerances:

1. Base Course: Plus or minus 1/2 inch.

2. Surface Course: Plus 1/4 inch, no minus.

B. Pavement Surface Smoothness: Compact each course to produce a surface smoothness within the following tolerances as determined by using a 10-foot straightedge applied transversely or longitudinally to paved areas:

1. Base Course: 1/4 inch

2. Surface Course: 1/8 inch

3. Crowned Surfaces: Test with crowned template centered and at right angle to crown. Maximum allowable variance from template is 1/4 inch.

3.7 FIELD QUALITY CONTROL

A. Testing Agency: The Contractor will engage a qualified testing agency to perform tests and inspections. The Engineer shall verify the qualifications of the selected testing agency prior to proceeding with any field quality control testing.

B. Thickness: In-place compacted thickness of hot-mix asphalt courses will be determined according to ASTM D 3549.

C. Surface Smoothness: Finished surface of each hot-mix asphalt course will be tested for compliance with smoothness tolerances.

D. In-Place Density: Testing agency will take samples of uncompacted paving mixtures and compacted pavement according to AASHTO T 168.

1. Reference maximum theoretical density will be determined by averaging results from four samples of hot-mix asphalt-paving mixture delivered daily to site, prepared according to ASTM D 2041, and compacted according to job-mix specifications.

2. In-place density of compacted pavement will be determined by testing core samples according to ASTM D 1188 or ASTM D 2726.

a. One core sample will be taken for every 1000 sq. yd. or less of installed pavement, with no fewer than three cores taken.

b. Field density of in-place compacted pavement may also be determined by nuclear method according to ASTM D 2950 and correlated with ASTM D 1188 or ASTM D 2726.

E. Replace and compact hot-mix asphalt where core tests were taken.

F. Remove and replace or install additional hot-mix asphalt where test results or measurements indicate that it does not comply with specified requirements. Asphalt-paving waste shall be disposed of in accordance with all applicable rules & regulations.

3.8 WASTE HANDLING

A. General: Asphalt-paving waste shall be disposed of in accordance with all applicable rules & regulations.

END OF SECTION 321216

SECTION 321316 - DECORATIVE CEMENT CONCRETE PAVEMENT

PART 1 - GENERAL

1.1 SUMMARY

A. This Section includes the following:

1. Decorative cement concrete pavement.

1.2 DEFINITIONS

A. Cementitious Materials: Portland cement alone or in combination with one or more of blended hydraulic cement, fly ash and other pozzolans, and ground granulated blast-furnace slag.

1.3 SUBMITTALS

A. Product Data: For each type of product indicated.

B. Design Mixtures: For each decorative cement concrete pavement mixture. Include alternate mixture designs when characteristics of materials, Project conditions, weather, test results, or other circumstances warrant adjustments.

1. Qualification Data: For Installer & ready-mix concrete producer.

C. Material Test Reports: From a qualified testing agency indicating and interpreting test results for compliance of the following with requirements indicated, based on comprehensive testing of current materials:

1. Aggregates. Include service record data indicating absence of deleterious expansion of concrete due to alkali aggregate reactivity.

D. Material Certificates: For the following materials, signed by manufacturers:

1. Cementitious materials.
2. Steel reinforcement and reinforcement accessories.
3. Fiber reinforcement.
4. Admixtures.
5. Curing compounds.
6. Applied finish materials.
7. Bonding agent or epoxy adhesive.
8. Joint fillers.

E. Field quality-control test reports.

F. Minutes of pre-installation conference.

1.4 QUALITY ASSURANCE

A. Installer Qualifications: An employer of workers trained and approved by manufacturer of decorative cement concrete pavement systems.

B. Ready-Mix-Concrete Producer Qualifications: A firm experienced in manufacturing ready-mixed concrete products and that complies with ASTM C 94/C 94M requirements for production facilities and equipment.

1. Producer certified according to NRMCA's "Certification of Ready Mixed Concrete Production Facilities."

C. Testing Agency Qualifications: An independent agency qualified according to ASTM C 1077 and ASTM E 329 for testing indicated, as documented according to ASTM E 548.

1. Personnel conducting field tests shall be qualified as ACI Concrete Field Testing Technician, Grade 1, according to ACI CP-01 or an equivalent certification program.

D. Source Limitations: Obtain decorative cement concrete pavement products and each type or class of cementitious material of the same brand from the same manufacturer's plant and each aggregate through one source.

E. ACI Publications: Comply with ACI 301, "Specification for Structural Concrete," unless modified by requirements in the Contract Documents.

F. Concrete Testing Service: Engage a qualified independent testing agency to perform material evaluation tests and to design concrete mixtures.

G. Mockups: Cast mockups of sections approximately 36 by 72 inches of decorative cement concrete pavement to demonstrate typical pattern, texture, surface finish, color, joints, and standard of workmanship.

1. Build mockups in the location and of the size indicated or, if not indicated, as directed by Design Consultant.
2. In presence of Design Consultant, damage part of the exposed surface of decorative cement concrete pavement for each finish, color, and texture required, and demonstrate materials and techniques proposed for repair to match adjacent undamaged surfaces.
3. Approved mockups may become part of the completed Work if undisturbed at time of Substantial Completion.

H. Pre-installation Conference: Conduct conference at Project site to comply with requirements in Division 1.

1. Before submitting design mixtures, review decorative cement concrete pavement mixture design and examine procedures for ensuring quality of concrete materials and decorative cement concrete pavement construction practices. Require representatives of each entity directly concerned with decorative cement concrete pavement to attend, including the following:
   a. Contractor's superintendent.
   b. Independent testing agency responsible for concrete design mixes.
   c. Ready-mix concrete producer.
   d. Decorative cement concrete pavement Installer.
   e. Manufacturer's representative of decorative cement concrete pavement system.

1.5 PROJECT CONDITIONS

A. Traffic Control: Maintain access for vehicular and pedestrian traffic as required for other construction activities.

PART 2 - PRODUCTS

2.1 FORMS

A. Form Materials: Plywood, metal, metal-framed plywood, or other approved panel-type materials to provide full-depth, continuous, straight, and smooth exposed surfaces.

1. Use flexible or curved forms for curves of a radius 100 feet or less.

B. Forms for Textured Finish Concrete: Units of face design, size, arrangement, and configuration indicated. Provide solid backing and form supports to ensure stability of textured form liners.

C. Form-Release Agent: Commercially formulated form-release agent that will not bond with, stain, or adversely affect concrete surfaces and will not impair subsequent treatments of concrete surfaces.

2.2 STEEL REINFORCEMENT

A. Plain-Steel Welded Wire Reinforcement: ASTM A 185, fabricated from as-drawn steel wire into flat sheets.

B. Reinforcing Bars: ASTM A 615/A 615M, Grade 60; deformed.

C. Steel Bar Mats: ASTM A 184/A 184M; with ASTM A 615/A 615M, Grade 60, deformed bars; assembled with clips.

D. Plain Steel Wire: ASTM A 82, as drawn.

E. Joint Dowel Bars: Plain steel bars, ASTM A 615/A 615M, Grade 60 Cut bars true to length with ends square and free of burrs.

F. Bar Supports: Bolsters, chairs, spacers, and other devices for spacing, supporting, and fastening reinforcing bars, welded wire reinforcement, and dowels in place. Manufacture bar supports according to CRSI's "Manual of Standard Practice" from steel wire, plastic, or precast concrete or fiber-reinforced concrete of greater compressive strength than concrete, and as follows:

1. Equip wire bar supports with sand plates or horizontal runners where base material will not support chair legs.

2.3 CONCRETE MATERIALS

A. Refer to specifications for concrete materials.

2.4 IMPRINTING TOOLS

A. Stamp Mats: Semi-rigid polyurethane mats with projecting textured and ridged underside capable of imprinting texture and joint patterns on plastic concrete.

B. Stamp Tools: Open-grid, aluminum or rigid plastic stamp tool capable of imprinting joint patterns on plastic concrete.

C. Rollers: Manually controlled, water-filled aluminum rollers with projecting ridges on drum capable of imprinting texture and joint patterns on plastic concrete.

D. Texture Rollers: Manually controlled, abrasion-resistant polyurethane rollers capable of imprinting texture on plastic concrete.

2.5 CURING AND SEALING MATERIALS

A. Curing Paper: Non-staining, waterproof paper, consisting of two layers of kraft paper cemented together and reinforced with fiber, complying with ASTM C 171.

B. Evaporation Retarder: Waterborne, monomolecular film forming, manufactured for application to fresh concrete.

C. Waterborne, Membrane-Forming Curing Compound: ASTM C 309, Type 1, Class B, specifically manufactured for colored concrete.

1. For integrally colored concrete, curing compound shall be pigmented type approved by coloring admixture manufacturer.
2. For concrete indicated to be sealed, curing compound shall be compatible with sealer.

D. Clear, Solvent-Borne, Membrane-Forming Curing and Sealing Compound: ASTM C 1315, Type 1, Class A.

E. Clear, Waterborne, Membrane-Forming Curing and Sealing Compound: ASTM C 1315, Type 1, Class A, specifically manufactured for use with colored concrete.

F. Clear Acrylic Sealer: Manufacturer's standard waterborne, membrane-forming, medium-gloss, acrylic copolymer emulsion solution, specifically manufactured for colored concrete, containing not less than 15 percent solids by volume, non-yellowing, and UV resistant.

G. Slip-Resistant Additive: Manufacturer's standard finely graded aggregate or polymer additive, designed to be added to clear acrylic sealer, to result in a slip-resistant surface.

2.6 RELATED MATERIALS

A. Expansion- and Isolation-Joint-Filler Strips: ASTM D 1751, asphalt-saturated cellulosic fiber

B. Bonding Agent: ASTM C 1059, Type II, non-redispersible, acrylic emulsion or styrene butadiene.

C. Epoxy Bonding Adhesive: ASTM C 881, two-component epoxy resin, capable of humid curing and bonding to damp surfaces, of class suitable for application temperature and of grade to requirements, and as follows:

1. Types IV and V, load bearing, for bonding hardened or freshly mixed concrete to hardened concrete.

D. Polyethylene Film: ASTM D 4397, 1 mil thick, clear.

2.7 CONCRETE MIXTURES

A. See Division 32 for concrete mixtures specifications.

B. Color Pigment: Add color pigment or colored water-reducing admixture to concrete mixture according to manufacturer's written instructions and to result in hardened concrete color consistent with approved mockup.

2.8 CONCRETE MIXING

A. See Division 32 for concrete mixing specifications.

PART 3 - EXECUTION

3.1 See Division 32 for general execution specifications.

3.2 STAMPING

A. Mat Stamping: While initially finished concrete is plastic, accurately align and place stamp mats in sequence. Uniformly load mats and press into concrete to produce required imprint pattern and depth of imprint on concrete surface. Remove stamp mats immediately. Hand stamp edges and surfaces unable to be imprinted by stamp mats.

1. Remove unembedded release agent no fewer than three days after stamping concrete. High pressure wash surface and joint patterns, taking care not to damage stamped concrete. Control, collect, and legally dispose of runoff.

B. Tool Stamping: While initially finished concrete is plastic, cover surface with polyethylene film, stretch taut to remove wrinkles, lap sides and ends 3 inches, and secure to edge forms. Lightly broom surface to remove air bubbles. Accurately align and place stamp tools in sequence and tamp into concrete to produce required imprint pattern and depth of imprint on concrete surface. Remove stamp tools immediately. Hand stamp edges and surfaces unable to be imprinted by stamp tools. Unroll and remove polyethylene film immediately after tool stamping.

1. Antiquing Agent: Apply over liquid release agent according to manufacturer's written instructions.

C. Roller Stamping: While initially finished concrete is plastic, cover surface with polyethylene film, stretch taut to remove wrinkles, lap sides and ends 3 inches, and secure to edge forms. Lightly

broom surface to remove air bubbles. Accurately align roller and repeat rolling operation to produce required imprint pattern and depth of imprint on concrete surface. Hand stamp surfaces inaccessible to roller. Unroll and remove polyethylene film immediately after roller stamping.

1. Antiquing Agent: Apply over liquid release agent according to manufacturer's written instructions.

3.3 CONCRETE PROTECTION AND CURING

A. General: Protect freshly placed concrete from premature drying and excessive cold or hot temperatures.

B. Comply with ACI 306.1 for cold-weather protection.

C. Evaporation Retarder: Apply evaporation retarder to concrete surfaces if hot, dry, or windy conditions cause moisture loss approaching 0.2 lb/sq. ft. x h before and during finishing operations. Apply according to manufacturer's written instructions after placing, screeding, and bull floating or darbying concrete but before float finishing.

D. Begin curing after finishing concrete but not before free water has disappeared from concrete surface.

E. Curing Compound: Apply curing compound immediately after final finishing. Apply uniformly in continuous operation by power spray or roller according to manufacturer's written instructions. Recoat areas that have been subjected to heavy rainfall within three hours after application. Maintain continuity of coating and repair damage during curing period.

1. Cure integrally colored concrete with a pigmented curing compound, as directed by manufacturer.
2. Cure concrete finished with pigmented mineral dry-shake hardener with a pigmented curing compound, as directed by manufacturer.

F. Curing and Sealing Compound: Apply uniformly in continuous operation by power spray or roller according to manufacturer's written instructions. Recoat areas subjected to heavy rainfall within three hours after initial application. Repeat process 24 hours later and apply a second coat. Maintain continuity of coating and repair damage during curing period.

G. Curing Paper: Cure with unwrinkled curing paper in pieces large enough to cover the entire width and edges of slab. Do not lap sheets. Fold curing paper down over pavement edges and secure with continuous banks of earth to prevent displacement or billowing due to wind. Immediately repair holes or tears in paper.

3.4 SEALER

A. Clear Acrylic Sealer: Apply uniformly in two coats in continuous operations according to manufacturer's written instructions. Allow first coat to dry before applying second coat, at 90-degrees to the direction of the first coat using same application methods and rates.

1. Begin sealing dry surface no sooner than 14 days after concrete placement.
2. Allow stained concrete surfaces to dry before applying sealer.

3. Mix slip-resistant additive thoroughly in sealer before application according to manufacturer's written instructions. Stir sealer occasionally during application to maintain even distribution of additive.

3.5 PAVEMENT TOLERANCES

A. Comply with tolerances of ACI 117 and as noted in specification.

3.6 FIELD QUALITY CONTROL

A. See Division 32 for field quality control specifications.

3.7 REPAIRS AND PROTECTION

A. See Division 32 for repairs and protection specifications.

3.8 DECORATIVE CEMENT CONCRETE PAVEMENT SCHEDULE

A. Refer to Drawings for pattern and color of decorative cement concrete pavement.

END OF SECTION 321316

SECTION 321613 - CONCRETE CURBING

PART 1 - GENERAL

1.01 SECTION INCLUDES

A. Curb installation

1.02 RELATED SECTIONS

A. Section 312001 – Earthwork

B. Section 321216 – Asphalt Paving

C. Section 321614 – Concrete Site Work

1.03 REFERENCES

A. Comply with ACI 301-89 for all work specified as part of this section unless specifically indicated otherwise within the Contract Documents.

1.04 SUBMITTALS

A. Comply with the requirements of the appropriate specification section for submittal procedures.

B. Product Data: Submit manufacturer's name, specifications and installation instructions for each item specified.

C. Quality Control Submittals

1. Qualifications Certification: Submit written certification or similar documentation signed by the applicable subcontractor, prime contractor and/or manufacturer (where applicable) indicating compliance with the "Qualifications" requirements specified below in the "Quality Assurance" section of this specification.
2. Experience Listing: Submit a list of completed projects using the products proposed for this project, including owner's contact information and telephone number for each project, demonstrating compliance with applicable "Qualifications" requirements specified in the "Quality Assurance" section of this specification.

D. Closeout Procedures: Comply with the requirements of appropriate specification section for closeout procedures.

1.05 QUALITY ASSURANCE

A. Regulatory Requirements

1. Obtain written permission from applicable agencies prior to the start of construction. Submit one copy of the permit as specified in "Submittals-Quality Control Submittals" above.

1.06 PROJECT CONDITIONS

A. Field Measurements: Establish and maintain required lines and elevations for grade control.

B. Existing Conditions: Maintain access for vehicular and pedestrian traffic as required for other construction activity. Provide barricades, warning signals, warning lights and similar items as required.

1.07 SEQUENCING AND SCHEDULING

A. Proceed with and complete concrete curb construction as rapidly as portions of the site become available, working within seasonal limitations for the work required.

PART 2 - PRODUCTS

2.01 MATERIALS

A. Concrete: Normal weight, air entrained concrete with a minimum compressive strength of 4,500 psi at the end of 28 days. Design air content shall be 6% by volume, with an allowable tolerance of plus or minus 1.5%. Concrete shall contain a minimum of 6.5 bags of cement per cubic yard. Slump shall between 2 and 4 inches.

B. Joint Fillers: Closed Cell Polyurethane Joint Filler: Resilient, compressible, semi-rigid, closed cell isometric polymer foam material, minimum ½" thick similar to Ceramar Joint Filler as manufactured by W.R. Meadows, Inc., Elgin IL.

1. Fiber board or cork joint filler material is NOT acceptable for use in concrete expansion joint work.

C. Joint Sealants: Two-part non-sag polyurethane sealant. For convenience, details and specifications have been based on the following manufacturers and their products:

1. Sikasil 728 SL by Sika Corporation, Lyndhurst, NJ.
2. Pecora 300 SL by Pecora Corp, Harleysville, PA.
3. Spectrem 900SL by Tremco Construction Products Group, Beachwood, OH.
4. Sikaflex 2c NS EZ Mix by Sika Corporation, Lyndhurst, NJ.
5. Pourthane SL by W.R. Meadows Inc., Hampshire, IL.

D. Reinforcing Bars and Dowels: Deformed steel bars, ASTM A 615, Grade 60.

2.02 EQUIPMENT

A. Forms: Steel of size and strength to resist movement during concrete placement and to retain horizontal and vertical alignment until removal. Use straight forms, free of distortion and defects. Bent, twisted, split or defective form materials are not acceptable. Use flexible spring steel forms to form radius bends. Coat forms with non-staining, clear, paraffin base form oil that will not discolor or otherwise deface the surface of concrete.

PART 3 - EXECUTION

3.01 EXAMINATION

A. Installer Verification of Conditions: Examine conditions under which concrete curbs are to be constructed with the materials and components specified in this section. Affected Prime Contractors, the Owner's Representative and the Project Designer shall be notified in writing of any conditions detrimental to the proper and timely installation of the work.

1. When the installer confirms conditions as being acceptable to ensure proper and timely installation of the work and to ensure requirements of applicable warranties or guarantees can be satisfied, submit written confirmation to the Project Designer. Failure to submit written confirmation and subsequent installation will be assumed to indicate conditions are acceptable to the installer.

3.02 PREPARATION

A. Surface Preparation: Remove all loose material from the compacted sub-base surface immediately before placing concrete. Establish and maintain required lines and grades.

3.03 INSTALLATION

A. Form Construction

1. Set approved forms true to line and grade, rigidly braced and secured. Cast curb in 10-foot long sections.
2. If curbs will abut existing pavement, locate joints opposite existing pavement joints.
3. Profile of curb to be 18” high by 6” wide with a tooled 1¼” radius on the top corner unless specifically detailed otherwise on the Contract Documents.
4. Allow forms to remain in place a minimum of 24 hours after concrete placement.

B. Joint Filler Installation: Provide joint fillers cut to size between the 10-foot sections, at the start and end of curved sections and where curbs abut existing concrete paving, fixed structures or appurtenances. Protect the top edge of the joint filler during concrete placement with a temporary cap and remove after concrete has been placed.

C. Reinforcement Placement: Reinforce curbs as indicated on the Contract Drawings. Maintain a minimum 3” cover on all reinforcing bars.

D. Concrete Placement: Do not place concrete until line and grade of subgrade and forms have been verified. Moisten subgrade as required to a uniform dampened condition at the time concrete is placed. Do not place concrete around structures until these items are brought to the required grade and alignment. Deposit and spread concrete in a continuous operation between joints.

E. Concrete Consolidation: Consolidate concrete by spading, rodding, forking or using an approved vibrator eliminating all air pockets, stone pockets and honeycombing. Consolidate with care to prevent dislocation of dowels and joints.

F. Remove forms and rub exposed face of curb to a smooth rubbed finish. Plastering is not permitted.

G. Control Joints: Provide expansion joints with preformed filler at 10-foot intervals as specified in Section B.

H. Concrete Curing: Cover and cure newly poured concrete curbs for a minimum of seven days in accordance with ACI 301.

I. Joint Sealant Installation: Remove temporary joint filler cap and install joint sealant per the manufacturer’s recommendations.

3.04 ADJUSTING AND CLEANING

A. Repairs and Protection of Concrete Curbing

1. Repair or replace broken or defective concrete curbing as directed by the Project Designer.
2. Protect concrete curbing from damage until acceptance of the curb construction.

END OF SECTION 321613

SECTION 321614 - CONCRETE SITE WORK

PART 1 - GENERAL

1.01 GENERAL

A. All concrete materials, mixture design, placement, curing, testing, and acceptance shall comply with ACI 301, Specifications for Concrete Construction, except as modified herein. Contractor shall perform all concrete work above and below grade as indicated on the Drawings and as required.

B. Concrete shall be capable of developing minimum compressive strength of 4,500 psi at 28 days.

C. Provide air-entraining admixture in accordance with ASTM C260 to achieve 6.0 percent ± 1.5 percent air content in exterior exposed concrete.

D. Section includes cast-in-place concrete for exterior site elements including but not limited to: sidewalks, driveways, curbs and gutters, concrete islands, slope gutters, headwalls, inlets and manholes, equipment pads, light pole bases, site retaining walls.

1.02 References

Comply with the latest edition of the following standards:

1. ACI 301 – Specifications for Concrete Construction
2. ACI 117 – Tolerances for Concrete Construction
3. ACI 305.1 – Hot Weather Concreting
4. ACI 306.1 – Cold Weather Concreting
5. ASTM C94 – Ready-Mixed Concrete
6. ASTM C150 – Portland Cement
7. ASTM C33 – Concrete Aggregates
8. ASTM C260 – Air-Entraining Admixtures
9. ASTM C494 – Chemical Admixtures
10. ASTM C143 – Slump of Hydraulic Cement Concrete
11. ASTM C231 – Air Content by Pressure Method
12. ASTM C31 – Making and Curing Test Specimens
13. ASTM C39 – Compressive Strength of Cylindrical Concrete Specimens
14. ASTM C171 – Moisture-Retaining Covers
15. ASTM C172 – Sampling Freshly Mixed Concrete

1.03 QUALITY ASSURANCE

Comply with provisions of following codes, specifications and standards, except where more stringent requirements are shown or specified:

1. ACI 301 - Specifications for Concrete Construction.

2. Ready-mixed concrete manufacturer shall comply with ASTM C94.

3. Concrete Reinforcing Steel Institute, "Manual of Standard Practice".

4. Testing agency shall be independent and qualified to perform sampling in accordance with referenced ASTM standards.

Materials and installed work may require testing and retesting, as directed by Architect/Engineer, at any time during progress of work. Allow free access to materials stockpiles and facilities. Tests, including retesting of rejected materials and installed work, shall be done at Contractor's expense.

1.04 FORM MATERIALS

1. Forms for Exposed Finish Concrete: Unless otherwise indicated, construct form work for exposed concrete surfaces with plywood, metal, metal-framed plywood faced or other acceptable panel-type materials, to provide continuous, straight, smooth, exposed surfaces. Furnish in largest practicable sizes to minimize number of joints and to conform to joint system shown on drawings. Provide form material with sufficient thickness to withstand pressure of newly placed concrete without bow or deflection.

   Use overlaid plywood complying with U.S. Product Standard "A-C or High Density Overlaid Concrete Form", Class 1.

2. Forms for Unexposed Finish Concrete: Form concrete surfaces which will be unexposed in finished structure with plywood, lumber, metal or other acceptable material. Provide lumber dressed on at least 2 edges and one side for tight fit.

3. Form Coatings: Provide commercial formulation form-coating compounds that will not bond with, stain nor adversely affect concrete surfaces, and will not impair subsequent treatments of concrete surfaces.

1.05 CONCRETE MATERIALS

Portland Cement: ASTM C 150, Type I. Use one brand of cement throughout project.

Aggregates: ASTM C 33. Provide aggregates from a single source for exposed concrete.

For exterior exposed surfaces, do not use fine or coarse aggregates containing spalling-causing deleterious substances.

Air-Entraining Mixtures: ASTM C260

Chemical Admixture: ASTM C494. Do not use calcium chloride or admixtures containing calcium chloride.

Water: Potable.

1.06 RELATED MATERIALS

Waterstops: Provide flat, dumbbell type or center bulb type waterstops at construction joints and other joints as shown. Size to suit joints.

Rubber Waterstops: Corps of Engineers CRD-C 513.

Moisture-Retaining Cover: One of the following, complying with ASTM C 171.

Waterproof paper.
Polyethylene film.
Polyethylene-coated burlap.

1.07 PROPORTIONING AND DESIGN OF MIXES

Prepare design mixes for each type and strength of concrete by either laboratory trial batch or field experience methods as specified in ACI 301. If trial batch method used, use an independent testing facility acceptable to Architect/Engineer for preparing and reporting proposed mix designs. The testing facility shall not be the same as used for field quality control testing.

Submit written reports to Architect/Engineer of each proposed mix for each class of concrete at least 15 days prior to start of work. Do not begin concrete production until mixes have been reviewed by Architect/Engineer.

Design mixes to provide normal weight concrete with the following properties, as indicated on drawings and schedules:

4500 psi 28-day compressive strength; maximum water-cementitious materials ratio 0.48; 6.0 percent ± 1.5 percent air entrainment for exterior exposed concrete.

Adjustment to Concrete Mixes: Mix design adjustments may be requested by Contractor when characteristics of materials, job conditions, weather, test results, or other circumstances warrant; at no additional cost to Owner and as accepted by Architect/Engineer. Laboratory test data for revised mix design and strength results must be submitted to and accepted by Architect/Engineer before using in work.

Slump Limits (inches): Proportion and design mixes to result in concrete slump at point of placement as follows:

Inlets, Manholes, Headwalls, Sidewalks, Driveways, Islands: 3 ± 1

Slope gutters, Vertical Curb, Sloping Curb, Barrier Curb, Concrete Islands: 4 ± 1

Reinforced foundation systems: 3 ± 1

Other concrete: Not more than 4

1.08 CONCRETE MIXES

Job-Site Mixing: Mix materials for concrete in appropriate drum type batch machine mixer. For mixers of one cu. yd., or smaller capacity, continue mixing at least 1-1/2 minutes, but not more than 5 minutes after ingredients are in mixer, before any part of batch is released. For mixers of capacity larger than one cu. yd., increase minimum 1-1/2. minutes of mixing time by 15 seconds for each additional cu. yd., or fraction thereof.

Ready-Mix Concrete: Comply with requirements of ASTM C94 for ready-mixed concrete production, mixing and delivery.

During hot weather, or under conditions contributing to rapid setting of concrete, a shorter mixing time than specified in ASTM C 94 may be required.

Concrete Coloring Systems: Where integrally colored concrete is indicated on the Drawings, provide admixtures conforming to ASTM C979. Submit manufacturer's product data and color samples for review prior to use.

1.09 FORMS

Design, erect, support, brace and maintain form work to support vertical and lateral loads that might be applied until such loads can be supported by concrete structure. Construct form work so concrete members and structures are of correct size, shape, alignment, elevation and position.

Design form work to be readily removable without impact, shock or damage to cast-in-place concrete surfaces and adjacent materials.

Construct forms to sizes, shapes, lines and dimensions shown, and to obtain accurate alignment, location, grades, level and plumb work in finished structures. Provide for openings, offsets, sinkages, keyways, recesses, moldings, rustications, reglets, chamfers, blocking, screeds, bulkheads, anchorages and inserts, and other features required in work. Use selected materials to obtain required finishes. Solidly butt joints and provide back-up at joints to prevent leakage of cement paste.

Fabricate forms for easy removal without hammering or prying against concrete surfaces. Provide crush plates or wrecking plates where stripping may damage cast concrete surfaces. Provide top forms for inclined surfaces where slope is too steep to place concrete with bottom forms only. Kerf wood inserts for forming keyways, reglets, recesses, and the like, to prevent swelling and for easy removal.

Provide temporary openings where interior area of form work is inaccessible for cleanout, for inspection before concrete placement, and for placement of concrete. Securely brace temporary openings and set tightly to forms to prevent loss of concrete mortar. Locate temporary openings on forms at inconspicuous locations.

Chamfer exposed corners and edges as indicated, using wood, metal, PVC or rubber chamfer strips fabricated to produce uniform smooth lines and tight edge joints.

Form Ties: Factory-fabricated, adjustable-length, removable or snap-off metal form ties, designed to prevent form deflection, and to prevent spalling concrete surfaces upon removal.

Unless otherwise indicated, provide ties so portion remaining within concrete after removal is at least 1-1/2” inside concrete.

Provisions for Other Trades: Provide openings in concrete form work to accommodate work of other trades. Determine size and location of openings, recesses and chases from trades providing such items. Accurately place and securely support items built into forms.

Cleaning and Tightening: Thoroughly clean forms and adjacent surfaces to receive concrete. Remove chips, wood, sawdust, dirt or other debris just before concrete is placed. Retighten forms and bracing after concrete placement is required to eliminate mortar leaks and maintain proper alignment.

1.10 JOINTS

Construction Joints: Locate and install construction joints as indicated or, if not indicated, locate so as not to impair strength and appearance of the structure, as acceptable to Architect/Engineer.

Provide keyways at least 1-1/2" deep in construction joints in walls, slabs and between walls and footings; accepted bulkheads designed for this purpose may be used for slabs.

Place construction joints perpendicular to the main reinforcement. Continue reinforcement across construction joints.

Provide waterstops in construction joints as indicated. Install waterstops to form continuous diaphragm in each joint. Make provisions to support and protect exposed waterstops during progress of work. Fabricate field joints in waterstops in accordance with manufacturer's printed instructions.

Construct isolation joints in slabs-on-ground at points of contact between slabs on ground and vertical surfaces, such as column pedestals, foundation walls, grade beams and elsewhere as indicated.

Form contraction joints by inserting pre-molded hardboard or fiberboard strip into fresh concrete until top surface of strip is flush with slab surface. After concrete has cured, remove inserts and clean groove of loose debris.

Contraction joints may be formed by saw cuts as soon as possible after slab finishing as may be safely done without dislodging aggregate.

1.11 PREPARATION OF FORM SURFACES

Clean re-used forms of concrete matrix residue, repair and patch as required to return forms to acceptable surface condition.

Coat contact surfaces of forms with a form-coating compound before reinforcement is placed.

Thin form-coating compounds only with thinning agent of type, and in amount, and under conditions of form-coating compound manufacturer's directions. Do not allow excess form coating material to accumulate in forms or to come into contact with concrete surfaces against which fresh concrete will be placed. Apply in compliance with manufacturer's instructions.

Coat steel forms with a non-staining, rust-preventative form oil or otherwise protect against rusting. Rust-stained steel form work is not acceptable.

1.12 CONCRETE PLACEMENT

Before placing concrete, inspect and complete form work installation, reinforcing steel, and items to be embedded or cast-in. Notify other crafts to permit installation of their work; cooperate with other trades in setting such work. Moisten wood forms immediately before placing concrete where form coatings are not used.

Coordinate the installation of joint materials and moisture barriers with placement of forms and reinforcing steel.

Comply with ACI 301 and as herein specified.

Deposit concrete continuously or in layers of such thickness that no concrete will be placed on concrete which has hardened sufficiently to cause the formation of seams or planes of weakness. If a section cannot be placed continuously, provide construction joints as herein specified. Deposit concrete as nearly as practicable to its final location to avoid segregation.

Deposit concrete in forms in horizontal layers not deeper than 24” and in a manner to avoid inclined construction joints. Where placement consists of several layers, place each layer while preceding layer is still plastic to avoid cold joints.

Consolidate placed concrete by mechanical vibrating equipment supplemented by hand-spading, rodding, or tamping. Use equipment and procedures for consolidation of concrete in accordance with ACI recommended practices.

Do not use vibrators to transport concrete inside forms. Insert and withdraw vibrators vertically at uniformly spaced locations not farther than visible effectiveness of machine. Place vibrators to rapidly penetrate placed layer and at least 6” into preceding layer. Do not insert vibrators into lower layers of concrete that have begun to set. At each insertion limit duration of vibration to time necessary to consolidate concrete and complete embedment of reinforcement and other embedded items without causing segregation of mix.

Deposit and consolidate concrete slabs in a continuous operation, within limits of construction joints, until the placing of a panel or section is completed.

Consolidate concrete during placing operations so that concrete is thoroughly worked around reinforcement and other embedded items and into corners.

Bring slab surfaces to correct level with straightedge and strike off. Use bull floats or darbies to smooth surface, free of humps or hollows. Do not disturb slab surfaces prior to beginning flashing operations.

Protect concrete work from physical damage or reduced strength which could be caused by frost, freezing actions, or low temperatures, in compliance with ACI 306.1 and as herein specified.

When air temperature has fallen to or is expected to fall below 40°F (4°C), uniformly heat water and aggregates before mixing to obtain a concrete mixture temperature of not less than 50°F (10°C), and not more than 80°F (27°C) at point of placement.

Do not use frozen materials or materials containing ice or snow. Do not place concrete on frozen subgrade or on subgrade containing frozen materials.

Do not use calcium chloride, salt and other materials containing antifreeze agents or chemical accelerators, unless otherwise accepted in mix designs.

When hot weather conditions exist that would seriously impair quality and strength of concrete, place concrete in compliance with ACI 305.1 and as herein specified.

Wet forms thoroughly before placing concrete.

Use water-reducing retarding admixture (Type D) when required by high temperatures, low humidity, or other adverse placing conditions.

1.13 FINISH OF FORMED SURFACES

For formed concrete surfaces not exposed to view in the finished work, provide surface finish as imparted by the form facing material, with tie holes and defective areas repaired and patched and fins and other projections exceeding 1/4 inch removed..

At tops of walls, horizontal offsets surfaces occurring adjacent to formed surfaces, strike-off smooth and finish with a texture matching adjacent formed surfaces. Continue final surface treatment of formed surfaces uniformly across adjacent unformed surfaces, unless otherwise indicated.

1.14 MONOLITHIC SLAB SURFACES

Reserved

1.15 CONCRETE CURING & PROTECTION

Protect freshly placed concrete from premature drying and excessive cold or hot temperatures.

Start initial curing as soon as free water has disappeared from concrete surface after placing and finishing. Weather permitting, keep continuously moist for not less than 7 days.

Begin final curing procedures immediately following initial curing and before concrete has dried. Continue final curing for at least 7 days in accordance with ACI 301 procedures. Avoid rapid drying at end of final curing period.

Curing Methods: Perform curing of concrete by moist curing, by moisture-retaining cover curing, by curing compound, and by combinations thereof, as herein specified.

Provide moisture curing by following methods:

1. Keep concrete surface continuously wet by covering with water.

2. Covering concrete surface with specified absorptive cover, thoroughly saturating cover with water and keeping continuously wet. Place absorptive cover to provide coverage of concrete surfaces and edges, with 4" lap over adjacent absorptive covers.

Provide moisture-cover curing as follows:

1. Cover concrete surfaces with moisture-retaining cover for curing concrete, placed in widest practicable width with sides and ends lapped at least 3” and sealed by waterproof tape or adhesive. Immediately repair any holes or tears during curing period using cover material and waterproof tape.

Cure formed concrete surfaces, including undersides of beams, supported slabs and other similar surfaces by moist curing with forms in place for full curing period or until forms are removed. If forms are removed, continue curing by methods specified above, as applicable.

Cure unformed surfaces, such as slabs and other flat surfaces by application of appropriate curing compound.

1.16 REMOVAL OF FORMS

Form work not supporting weight of concrete, such as sides of beams, walls, columns, and similar parts of the work, may be removed after cumulatively curing at not less than 50□ F. (10°C) for 24 hours after placing concrete, provided concrete is sufficiently hard to not be damaged by form removal operations, and provided curing and protection operations are maintained.

Form facing material may be removed 4 days after placement, only if shores and other vertical supports have been arranged to permit removal of form facing material without loosening or disturbing shores and supports.

1.17 RE-USE OF FORMS

Clean and repair surfaces of forms to be re-used in work. Split, frayed, delaminated or otherwise damaged form facing material will not be acceptable for exposed surfaces. Apply new form coating compound as specified for new form work.

When forms are extended for successive concrete placement, thoroughly clean surfaces, remove fins and laitance, and tighten forms to close joints. Align and secure joint- to avoid offsets. Do not use "patched' forms for exposed concrete surfaces, except as acceptable to Architect/Engineer.

1.18 MISCELLANEOUS CONCRETE FORMS

Fill in holes and openings left in concrete structures for passage of work by other trades, unless otherwise shown or directed, after work of other trades is in place. Mix, place and cure concrete as herein specified, to blend with in-place construction. Provide other miscellaneous concrete filling shown or required to complete work.

Grout base plates and foundations as indicated, using specified non-shrink grout. Use nonmetallic grout for exposed conditions, unless otherwise indicated.

1.19 CONCRETE SURFACE REPAIRS

Patching Defective Areas: Repair and patch defective areas with cement mortar immediately after removal of forms.

Cut out honeycomb, rock pockets, voids over ¼" in any dimension, and holes left by tie rods and bolts, down to solid concrete but, in no case to a depth of less than 1". Make edges of cuts perpendicular to the concrete surface. Thoroughly clean, dampen with water and brush-coat the area to be patched with specified bonding agent. Place patching mortar after bonding compound has dried.

For exposed-to-view surfaces, blend white Portland cement and standard Portland cement so that, when dry, patching mortar will match color surrounding. Provide test areas at inconspicuous location to verify mixture and color match before proceeding with patching. Compact mortar in place and strike-off slightly higher than surrounding surface.

Repair of Formed Surfaces: Remove and replace concrete having defective surfaces if defects cannot be repaired to satisfaction of Architect/Engineer. Surface defects, as such, include color and texture irregularities, cracks, stains, air bubbles, honeycomb, rock pockets; fins and other projections on surface; and stains and other discolorations that cannot be removed by cleaning. Flush out from tie holes, fill with dry pack mortar, or precast cement cone plugs secured in place with bonding agent.

Repair concealed formed surfaces, where possible, that contain defects that affect the durability of concrete. If defects cannot be repaired, remove and replace concrete.

Repair of Unformed Surfaces: Test unformed surfaces, such as monolithic slabs, for smoothness and verify surface plane to tolerances specified for each surface and finish. Correct low and high areas as herein specified.

Test unformed surfaces sloped to drain for trueness of slope, in addition to smoothness, using a template having required slope.

Repair finished unformed surfaces that contain defects which affect durability of concrete. Surface defects, as such, include crazing, cracks in excess of 0.01 inch wide or -which penetrate to reinforcement or completely through non-reinforced sections regardless of width, spalling, pop-outs, honeycomb, rock pockets, and other objectionable conditions.

Correct high areas in unformed surfaces by grinding, after concrete has cured at least 14 days.

Correct low areas in unformed surfaces during, or immediately after completion of surface finishing operations by cutting out low areas and replacing with fresh concrete. Finish repaired areas to blend into adjacent concrete. Proprietary patching compounds may be used when acceptable to Architect/Engineer.

Repair defective areas, except random cracks and single holes not exceeding 1" diameter, by cutting out and replacing with fresh concrete. Remove defective areas to sound concrete with clean, square cuts and expose reinforcing steel with at least ¾" clearance all around. Dampen

concrete surfaces in contact with patching concrete and apply bonding compound. Mix patching concrete of same materials to provide concrete of same type or class as original concrete. Place, compact, and finish to blend with adjacent finished concrete. Cure in the same manner as adjacent concrete.

Repair isolated random cracks and single holes not over 1" in diameter by dry-pack method. Groove top of cracks and cut-out holes to sound concrete and clean of dust, dirt, and loose particles. Dampen cleaned concrete surfaces and apply bonding compound. Mix dry-pack, consisting of one part Portland cement to 2 ½ parts fine aggregate passing a No. 16 mesh sieve, using only enough water as required for handling and placing. Place dry pack after bonding compound has dried. Compact dry-pack mixture in place and finish to match adjacent concrete. Keep patched area continuously moist for not less than 72 hours.

Perform structural repairs with prior approval of Architect/Engineer for method and procedure, using specified epoxy adhesive and mortar.

Repair methods not specified above may be used, subject to acceptance of Architect/Engineer.

1.20 QUALITY CONTROL TESTING DURING CONSTRUCTION

Sampling and testing for quality control during placement of concrete may include the following, as directed by Architect/Engineer.

Sampling Fresh Concrete: ASTM C 172, except modified for slump to comply with ASTM C 94.

1. Slump: ASTM C 143; one test at point of discharge for each day's pour of each type of concrete; additional tests when concrete consistency seems to have changed.

2· Air Content: ASTM C 173, volumetric method for lightweight or normal weight concrete; ASTM C 231 pressure for normal weight concrete; one for each set of compressive strength test specimens.

3. Concrete Temperature: Test hourly when air temperature is 40°F (4°C) and below, and when 80°F (27°C), and above; and each time a set of compression test specimens made.

4. Compression Test Specimen: ASTM C 31; one set of four standard cylinders or each compressive strength test, unless otherwise directed. Mold and store cylinders for laboratory cured test specimens except when field-cure test specimens are required.

END OF SECTION 321614

SECTION 321723 - PAVEMENT MARKINGS

PART 1 - GENERAL

1.1 RELATED DOCUMENTS

A. Drawings and general provisions of the Contract, including General and Supplementary Conditions, apply to this Section.

1.2 SUMMARY

A. Section includes painted markings applied to asphalt pavement.

1.3 ACTION SUBMITTALS

A. Product Data: For each type of product.

1. Include technical data and tested physical and performance properties.

1.4 QUALITY ASSURANCE

A. Regulatory Requirements: Comply with materials, workmanship, and other applicable requirements of Standard Specifications of New Jersey Department of Transportation and Manual on Uniform Traffic Control Devices (MUTCD) for pavement-marking work.

1.5 FIELD CONDITIONS

A. Environmental Limitations: Proceed with pavement marking only on clean, dry surfaces and at a minimum ambient or surface temperature of 40 deg F for alkyd materials, and not exceeding 95 deg F.

PART 2 - PRODUCTS

2.1 PAVEMENT-MARKING PAINT

A. Pavement-Marking Paint: MPI #32, Solvent based acrylic traffic-marking paint.

1. Color: White, Yellow.

B. Pavement-Marking Paint: MPI #97, Waterborne traffic-marking paint.

1. Color: Blue, Black.

PART 3 - EXECUTION

3.1 EXAMINATION

A. Verify that pavement is dry and in suitable condition to begin pavement marking according to manufacturer's written instructions.

B. Proceed with pavement marking only after unsatisfactory conditions have been corrected.

3.2 PAVEMENT MARKING

A. Do not apply pavement-marking paint until layout, colors, and placement have been verified with Architect.

B. Sweep and clean surface to eliminate loose material and dust.

C. Apply paint with mechanical equipment to produce pavement markings, of dimensions indicated, with uniform, straight edges. Apply at manufacturer's recommended rates to provide a minimum wet film thickness of 15 mils.

1. Apply graphic symbols and lettering with paint-resistant, die-cut stencils, firmly secured to pavement. Mask an extended area beyond edges of each stencil to prevent paint application beyond the stencil. Apply paint so that it cannot run beneath the stencil.

3.3 PROTECTING AND CLEANING

A. Protect pavement markings from damage and wear during remainder of construction period.

B. Clean spillage and soiling from adjacent construction using cleaning agents and procedures recommended by manufacturer of affected construction.

END OF SECTION 321723

SECTION 322001 - UNIT PAVERS

PART 1 - GENERAL

1.1 SUMMARY

A. Section Includes:

1. Products:
   a. Brick pavers.
   b. Concrete pavers.
2. Applications:
   a. Loose-set paving.

B. Related Sections:

1. Division 312001 - Earthwork
2. Division 321216 - Asphalt Paving

1.2 REFERENCES

A. ASTM C 144-18 -- Standard Specification for Aggregate for Masonry Mortar; 1993; 2019

B. ASTM C 902-93 -- Standard Specification for Pedestrian and Light Traffic Paving Brick; 1993; 2020

C. ASTM C 936/C 936M-21b -- Standard Specification for Solid Concrete Interlocking Paving Units; 1982 (Reapproved 1988); 2022

D. ASTM D 1557-12(2021) – Standard Test Method for Laboratory Compaction Characteristics of Soil Using Modified Effort (56,000 ft-lbf/ft3 (2,700 kN-m/m3)); 1992; 2021

E. ASTM D 2940/D 2940 M-20 -- Standard Specification for Graded Aggregate Material for Bases or Subbases for Highways or Airports; 1992, 2020

1.3 SUBMITTALS

A. Product Data:

1. Submit for each product specified in this section.
2. Include documentation as necessary to demonstrate compliance with specified requirements.

B. Samples for Initial Selection: For each distinct unit paver type indicated, submit full-sized unit pavers or sections of pavers showing manufacturer's standard textures, patterns, and colors available.

C. Samples for Verification Purposes: For each distinct unit paver color, type, and pattern indicated, submit one set of full-sized samples showing all variations to be expected in the finished installation.

D. Manufacturer's Instructions:

1. Submit for each product specified in this section.
2. Include instructions for examination, preparation, and protection of adjacent work.

1.4 QUALITY ASSURANCE

A. Manufacturer's Qualifications: Firm regularly engaged in manufacture of products specified in this section, and whose products have been in satisfactory use under similar service conditions for not less than 5 years.

B. Installer's Qualifications: Firm regularly engaged in installation of products specified in this section, with a minimum of 5 years of experience.

C. Field-Constructed Mock-up:

1. Before beginning installation, construct one mock-up for each required unit paver color, type, and pattern; and each separate application and joint treatment indicated.
2. Accepted mock-up shall establish quality of materials, workmanship, and appearance to be expected in the finished installation.
3. Location: As directed by the architect.
4. Approximate dimensions for each mock-up: 4 feet by 3 feet, full thickness.
5. Do not begin paver installation until architect has accepted qualities of mock-up.
6. Keep mock-up intact throughout construction period.
7. Mock-up may be incorporated into final work.

1.5 DELIVERY, STORAGE, AND HANDLING

A. Deliver, store, and handle materials in a manner to prevent damage and deterioration.

PART 2 - PRODUCTS

2.1 UNIT PAVERS

A. For each distinct paver color, type, and pattern, provide materials produced by one manufacturer.

B. Provide unit pavers free of defects which would impair strength, durability, or appearance.

1. Provide pavers of uniform coloration, within range specified or approved.

C. Concrete Pavers (Turfstone or approved equal): Concrete grid pavers with 40% opening.

1. Size: 16” x 24” x 3 1/8” thick.
2. Color and texture: As selected by the architect from manufacturer's complete set of standard colors and textures.

2.2 ACCESSORY MATERIALS

A. Subbase Course: Graded aggregate, subbase material (ASTM D 2940).

B. Base Course: Graded aggregate, base material (ASTM D 2940).

C. Leveling Course Sand: Fine aggregate (ASTM C 144) consisting of clean, water-washed, natural sand.

D. Sand for Loose-Set Paving Joints: Clean, water-washed, fine sand, properly graded for paving joints, and complying with paver manufacturer's recommendations.

PART 3 - EXECUTION

3.1 EXAMINATION

A. Examine areas to receive paving and conditions under which unit pavers will be installed.

B. Verify that related work to be performed before installation of paving has been completed.

C. Notify the architect in writing of any conditions which are not in compliance with requirements.

D. Correct any unsatisfactory conditions before installing products specified in this section. Commencement of installation indicates acceptance of conditions.

3.2 PREPARATION

A. Clean unit paver surfaces before setting.

3.3 SETTING PAVING - GENERAL

A. Edging: Before beginning installation of unit pavers, provide edging as indicated.

B. Install unit pavers in accordance with manufacturer's recommendations. Installation must be performed by skilled mechanics.

C. Install full-sized, uncut unit pavers whenever possible.

1. Cut pavers as required to produce indicated configuration and to join neatly with adjacent work.
2. Exposed edges: Cut straight and true.

D. Provide openings as required to accommodate other work. Close up such openings, after other work is complete, with paving that matches paving already set.

E. Set pavers as indicated on drawings.

F. Set pavers accurately, in configurations and locations indicated, with edges and faces aligned according to established relationships and required tolerances. Provide consistent joints of indicated dimensions.

G. Setting Tolerances:

1. Maximum vertical offset between top of each unit paver and tops of adjacent pavers: 1/16 inch.
2. Maximum variance from finished surface: 1/8 inch in 2 feet and 1/4 inch in 10 feet.

3.4 LOOSE-SET PAVING

A. Subbase: Place graded aggregate. Compact materials.

1. Compacted thickness: Indicated on drawings.
2. Compacted density: Not less than 100 percent of maximum laboratory density measured in accordance with ASTM D 1557.

B. Base: Place graded aggregate. Compact materials.

1. Compacted thickness: Indicated on drawings.
2. Compacted density: Not less than 100 percent of maximum laboratory density measured in accordance with ASTM D 1557.

C. Sand Leveling Course: Place sand course.

1. Compact leveling course to achieve compacted thickness indicated on drawings.
2. Provide loosened leveling material over compacted portion of leveling course. Screed to provide uniform thickness. Maintain loosened condition until pavers have been placed and compacted.
   a. Maximum thickness of loose, screeded leveling material: 1/8 inch.
3. Treat leveling course with herbicide to inhibit growth of vegetation.

D. Set pavers with hand-tight joints, except where spaced joints are indicated. Level pavers.

E. Maintain straight lines.

F. Provide cut pieces as required to fit paver tightly to restraining surfaces.

G. Place fine sand designated for use in joints between unit pavers.

H. Concrete Pavers:

1. Randomize texture and color variations by selecting pavers to be installed alternately from at least 4 cubes or pallets.
2. Vibrate pavers in strict accordance with paver manufacturer's recommendations. Use high-frequency, low-amplitude plate vibrator which can deliver 3500 to 5000 pounds of compaction force. As soon as pavers have been vibrated into leveling material, spread sand designated for use in joints, over pavers and vibrate pavers until sand fills joints. One month after initial joint filling operation is completed, repeat joint filling procedure.

3.5 ADJUSTING AND CLEANING

A. Remove and replace paving that:

1. Is discolored, cracked, nicked, or defective in any way.
2. Does not match approved samples.
3. Does not match approved mock-up.
4. Has defective joints.
5. Does not comply with requirements indicated.

B. Replace pavers in a manner which results in the paving showing no evidence of replacement work.

C. Sweep excess sand used in loose-set joints from paving surface.

3.3 PROTECTION

A. Protect completed work and maintain protection until substantial completion.

END OF SECTION 322001

SECTION 323113 - CHAIN LINK FENCES AND GATES

PART 1 - GENERAL

1.1 RELATED DOCUMENTS

A. Drawings and general provisions of the Contract, including General and Supplementary Conditions and Division 01 Specification Sections, apply to this Section.

1.2 SUMMARY

A. Section Includes:

1. Chain-link fences.
2. Gates: swing.

1.3 ACTION SUBMITTALS

A. Product Data: For each type of product indicated. Include construction details, material descriptions, dimensions of individual components and profiles, and finishes for chain-link fences and gates.

1. Fence and gate posts, rails, and fittings.
2. Chain-link fabric, reinforcements, and attachments.
3. Accessories: Insert accessory.
4. Gates and hardware.

B. Shop Drawings: Include plans, elevations, sections, details, and attachments to other work. Show accessories, hardware, gate operation, and operational clearances.

C. Samples for Initial Selection: For components with factory-applied color finishes.

1.4 INFORMATIONAL SUBMITTALS

A. Warranty: Sample of special warranty.

1.5 PROJECT CONDITIONS

A. Field Measurements: Verify layout information for chain-link fences and gates shown on Drawings in relation to property survey and existing structures. Verify dimensions by field measurements.

1.6 WARRANTY

A. Special Warranty: Manufacturer's standard form in which Installer agrees to repair or replace components of chain-link fences and gates that fail in materials or workmanship within specified warranty period.

1. Failures include, but are not limited to, the following:
   a. Deterioration of metals, metal finishes, and other materials beyond normal weathering.
2. Warranty Period: 1 year from date of Substantial Completion.

PART 2 - PRODUCTS

2.1 CHAIN-LINK FENCE FABRIC

A. General: Provide fabric in one-piece heights measured between top and bottom of outer edge of selvage knuckle or twist. Comply with CLFMI Product Manual and with requirements indicated below:

1. Fabric Height: As indicated on Drawings.
2. Steel Wire Fabric: 9 gauge core wire.
   a. Mesh Size: 2 inches.
   b. Polymer-Coated Fabric: ASTM F 668, Class 1 over zinc-coated steel wire.
      1) Color: Black, complying with ASTM F 934.
3. Selvage: Knuckled at both selvages.

2.2 FENCE FRAMING

A. Posts and Rails: Comply with ASTM F 1043 for framing, including rails, braces, and line; terminal; and corner posts. Provide members with minimum dimensions and wall thickness according to ASTM F 1043 based on the following:

1. Fence Height: As indicated on Drawings.
2. Heavy Industrial Strength: Material Group IA, round steel pipe, Schedule 40.
   a. Line Post: As indicated on the drawings.
   b. End, Corner and Pull Post: As indicated on the drawings.
3. Horizontal Framework Members: top and bottom rails complying with ASTM F 1043.
   a. Top Rail: As indicated on the drawings.
4. Brace Rails: Comply with ASTM F 1043.
5. Coating for Steel Framing:
   a. Vinyl coated

2.3 TENSION WIRE

A. Polymer-Coated Steel Wire: 0.177-inch diameter, tension wire complying with ASTM F 1664, Class 1 over zinc-coated steel wire.

1. Color: Match chain-link fabric as selected by Owner from manufacturer's full range, complying with ASTM F 934.

2.4 FITTINGS

A. General: Comply with ASTM F 626.

B. Rail and Brace Ends: For each gate, corner, pull, and end post.

C. Rail Fittings: Provide the following:

1. Top Rail Sleeves: Pressed-steel or round-steel tubing not less than 6 inches long.

D. Tension and Brace Bands: Pressed steel.

E. Tension Bars: Steel, length not less than 2 inches shorter than full height of chain-link fabric. Provide one bar for each gate and end post, and two for each corner and pull post, unless fabric is integrally woven into post.

F. Tie Wires, Clips, and Fasteners: According to ASTM F 626.

1. Standard Round Wire Ties: For attaching chain-link fabric to posts, rails, and frames, complying with the following:
   a. Vinyl Coated Steel

G. Finish:

1. Metallic Coating for Pressed Steel or Cast Iron:
   a. Vinyl coating.
2. Aluminum: Mill finish.

2.5 GROUT AND ANCHORING CEMENT

A. Non-shrink, Nonmetallic Grout: Premixed, factory-packaged, non-staining, noncorrosive, nongaseous grout complying with ASTM C 1107. Provide grout, recommended in writing by manufacturer, for exterior applications.

B. Erosion-Resistant Anchoring Cement: Factory-packaged, non-shrink, non-staining, hydraulic-controlled expansion cement formulation for mixing with potable water at Project site to create pourable anchoring, patching, and grouting compound. Provide formulation that is resistant to erosion from water exposure without needing protection by a sealer or waterproof coating and that is recommended in writing by manufacturer, for exterior applications.

PART 3 - EXECUTION

3.1 EXAMINATION

A. Examine areas and conditions, with Installer present, for compliance with requirements for site clearing, earthwork, pavement work, and other conditions affecting performance of the Work.

1. Do not begin installation before final grading is completed unless otherwise permitted by Architect.

B. Proceed with installation only after unsatisfactory conditions have been corrected.

3.2 PREPARATION

A. Stake locations of fence lines, gates, and terminal posts. Do not exceed intervals of 500 feet or line of sight between stakes. Indicate locations of utilities, lawn sprinkler system, underground structures, benchmarks, and property monuments.

3.3 INSTALLATION, GENERAL

A. Install chain-link fencing to comply with ASTM F 567 and more stringent requirements indicated.

3.4 CHAIN-LINK FENCE INSTALLATION

A. Post Excavation: Drill or hand-excavate holes for posts to diameters and spacing indicated in firm soil or compacted backfill.

B. Post Setting: Set posts in concrete at indicated spacing into firm, undisturbed soil or compacted backfill.

1. Verify that posts are set plumb, aligned, and at correct height and spacing, and hold in position during setting with concrete or mechanical devices.
2. Concrete Fill: Place concrete around posts to dimensions indicated and vibrate or tamp for consolidation. Protect aboveground portion of posts from concrete splatter.
   a. Exposed Concrete: Extend 2 inches above grade; shape and smooth to shed water.

C. Terminal Posts: Locate terminal end, corner, and gate posts per ASTM F 567 and terminal pull posts at changes in horizontal or vertical alignment of 15 degrees or more.

D. Line Posts: Space line posts at 10’ maximum as indicated on the Drawing.

E. Post Bracing and Intermediate Rails: Install according to ASTM F 567, maintaining plumb position and alignment of fencing. Diagonally brace terminal posts to adjacent line posts with truss rods and turnbuckles. Install braces at end and gate posts and at both sides of corner and pull posts.

1. Locate horizontal braces at mid-height of fabric 72 inches or higher, on fences with top rail and at two-third fabric height on fences without top rail. Install so posts are plumb when diagonal rod is under proper tension.

F. Top Rail: Install according to ASTM F 567, maintaining plumb position and alignment of fencing. Run rail continuously through line post caps, bending to radius for curved runs and terminating into rail end attached to posts or post caps fabricated to receive rail at terminal posts. Provide expansion couplings as recommended in writing by fencing manufacturer.

G. Intermediate and Bottom Rails: Install and secure to posts with fittings.

H. Chain-Link Fabric: Apply fabric to outside of enclosing framework. Leave 2 inches between finish grade or surface and bottom selvage unless otherwise indicated. Pull fabric taut and tie to posts, rails, and tension wires. Anchor to framework so fabric remains under tension after pulling force is released.

I. Tension or Stretcher Bars: Thread through fabric and secure to end, corner, pull, and gate posts with tension bands spaced not more than 15 inches o.c.

J. Tie Wires: Use wire of proper length to firmly secure fabric to line posts and rails. Attach wire at one end to chain-link fabric, wrap wire around post a minimum of 180 degrees, and attach other end to chain-link fabric per ASTM F 626. Bend ends of wire to minimize hazard to individuals and clothing.

1. Maximum Spacing: Tie fabric to line posts at 12 inches o.c. and to braces at 24 inches o.c.

K. Fasteners: Install nuts for tension bands and carriage bolts on the side of the fence opposite the fabric side.

3.5 GATE INSTALLATION

A. Install gates according to manufacturer's written instructions, level, plumb, and secure for full opening without interference. Attach fabric as for fencing. Attach hardware using tamper-resistant or concealed means. Install ground-set items in concrete for anchorage. Adjust hardware for smooth operation and lubricate where necessary.

3.6 ADJUSTING

A. Gates: Adjust gates to operate smoothly, easily, and quietly, free of binding, warp, excessive deflection, distortion, nonalignment, misplacement, disruption, or malfunction, throughout entire operational range. Confirm that latches and locks engage accurately and securely without forcing or binding.

B. Lubricate hardware and other moving parts.

3.7 DEMONSTRATION

A. Engage a factory-authorized service representative to train Owner's personnel to adjust, operate, and maintain chain-link fences and gates.

END OF SECTION 323113

SECTION 329200 – LAWNS AND GRASSES

PART 1 - GENERAL

1.1 SUMMARY

A. This Section includes seeding and sodding.

1.2 DEFINITIONS

A. Finish Grade: Elevation of finished surface of planting soil.

B. Manufactured Soil: Soil produced off-site by homogeneously blending mineral soils or sand with stabilized organic soil amendments to produce topsoil or planting soil.

C. Planting Soil: Native or imported topsoil, manufactured topsoil, or surface soil modified to become topsoil; mixed with soil amendments.

D. Subgrade: Surface or elevation of subsoil remaining after completing excavation, or top surface of a fill or backfill immediately beneath planting soil.

1.3 SUBMITTALS

A. Product Data: For each type of product indicated.

B. Product certificates.

C. Planting Schedule: Indicating anticipated planting dates.

1.4 QUALITY ASSURANCE

A. Installer's Field Supervision: Require Installer to maintain an experienced full-time supervisor on Project site when planting is in progress.

B. Topsoil Analysis: Furnish soil analysis by a qualified soil-testing laboratory.

1.5 DELIVERY, STORAGE, AND HANDLING

A. Sod: Harvest, deliver, store, and handle sod according to requirements in TPI's "Specifications for Turfgrass Sod Materials" and "Specifications for Turfgrass Sod Transplanting and Installation" in its "Guideline Specifications to Turfgrass Sodding."

1.6 LAWN MAINTENANCE

A. Begin maintenance immediately after each area is planted and continue until acceptable lawn is established, but for not less than the following periods:

1. Seeded Lawns: 60 days from date of Substantial Completion.
2. Sodded Lawns: 30 days from date of Substantial Completion.

B. Mow lawn as soon as top growth is tall enough to cut. Remove no more than 40 percent of grass-leaf growth in initial or subsequent mowings.

PART 2 - PRODUCTS

2.1 SEED (applied by hydro-seed)

A. Seed Species: Seed mixture per “The Standards for Soil Erosion & Sediment Control in New Jersey” seed mixtures tables 4-2 & 4-3.

2.2 TURFGRASS SOD

A. Turfgrass Sod: Sod shall be certified to complying with TPI's "Specifications for Turfgrass Sod Materials" in its "Guideline Specifications to Turfgrass Sodding." Furnish viable sod of uniform density, color, and texture, strongly rooted, and capable of vigorous growth and development when planted.

B. Turfgrass Species: Sod of grass species as follows:

1. Sod shall be 100% Tuckahoe Bluegrass Sod (or approved equal). A certified Sod Certificate must be presented to the Engineer/Owner upon delivery of the sod. If sod certificate does not meet specifications, it will be the Contractor’s responsibility to install correct sod. The contractor will absorb all costs if sod and certificate do not meet specifications.

2.3 PLANTING MATERIALS

A. Topsoil: ASTM D 5268, pH range of 5.5 to 7, a minimum of 4 percent organic material content; free of stones 1 inch (25 mm) or larger in any dimension and other extraneous materials harmful to plant growth.

1. Topsoil Source: Reuse surface soil stockpiled on-site and supplement with imported or manufactured topsoil from off-site sources when quantities are insufficient. Verify suitability of stockpiled surface soil to produce topsoil.
2. Topsoil Source: Amend existing in-place surface soil to produce topsoil. Verify suitability of surface soil to produce topsoil. Surface soil may be supplemented with imported or manufactured topsoil from off-site sources.

B. Inorganic Soil Amendments:

1. Lime: ASTM C 602, Class T or O, agricultural limestone containing a minimum 80 percent calcium carbonate equivalent.
2. Sulfur: Granular, biodegradable, containing a minimum of 90 percent sulfur, with a minimum 99 percent passing through No. 6 (3.35-mm) sieve and a maximum 10 percent passing through No. 40 (0.425-mm) sieve.
3. Iron Sulfate: Granulated ferrous sulfate containing a minimum of 20 percent iron and 10 percent sulfur.

4. Aluminum Sulfate: Commercial grade, unadulterated.

C. Organic Soil Amendments

1. Compost: Well-composted, stable, and weed-free organic matter, pH range of 5.5 to 8.
2. Peat: Sphagnum peat moss, partially decomposed, finely divided or granular texture, with pH range of 3.4 to 4.8.
3. Peat: Finely divided or granular texture, with pH range of 6 to 7.5, containing partially decomposed moss peat, native peat, or reed-sedge peat and having water-absorbing capacity of 1100 to 2000 percent.
4. Wood Derivatives: Decomposed, nitrogen-treated sawdust, ground bark, or wood waste; of uniform texture, free of chips, stones, sticks, soil, or toxic materials.

D. Fertilizer:

1. Bonemeal: Commercial, raw or steamed, finely ground; a minimum of 3 percent nitrogen and 15 percent phosphoric acid.
2. Superphosphate: Commercial, phosphate mixture, soluble; a minimum of 20 percent available phosphoric acid.
3. Commercial Fertilizer: Commercial-grade complete fertilizer of neutral character, consisting of fast- and slow-release nitrogen, 50 percent derived from natural organic sources of urea formaldehyde, phosphorous, and potassium in the following composition:

   a. Composition: 10-20-10

E. Mulches:

1. Straw Mulch: Provide air-dry, clean, mildew- and seed-free, salt hay or threshed straw of wheat, rye, oats, or barley.
2. Peat Mulch: Sphagnum peat moss, partially decomposed, finely divided or granular texture, with pH range of 3.4 to 4.8.
3. Peat Mulch: Finely divided or granular texture, with pH range of 6 to 7.5, containing partially decomposed moss peat, native peat, or reed-sedge peat and having water-absorbing capacity of 1100 to 2000 percent.
4. Compost Mulch: Well-composted, stable, and weed-free organic matter, pH range of 5.5 to 8.

PART 3 - EXECUTION

3.1 LAWN PREPARATION

A. Newly Graded Subgrades: Loosen subgrade to a minimum depth of 4 inches. Remove stones larger than 1 inch in any dimension and sticks, roots, rubbish, and other extraneous matter and legally dispose of them off Owner's property.

1. Apply superphosphate fertilizer directly to subgrade before loosening.
2. Thoroughly blend planting soil mix off-site before spreading or spread topsoil, apply soil amendments and fertilizer on surface, and thoroughly blend planting soil mix.
3. Spread topsoil mix to a depth of 4 inches but not less than required to meet finish grades after light rolling and natural settlement. Do not spread if planting soil or subgrade is frozen, muddy, or excessively wet.

B. Unchanged Subgrades: If lawns are to be planted in areas unaltered or undisturbed by excavating, grading, or surface soil stripping operations, prepare surface soil as follows:

1. Remove existing grass, vegetation, and turf. Do not mix into surface soil.
2. Loosen surface soil to a depth of at least of 6 inches. Apply soil amendments and fertilizers according to planting soil mix proportions and mix thoroughly into top 4 inches of soil. Till soil to a homogeneous mixture of fine texture.
3. Remove stones larger than 1 inch in any dimension and sticks, roots, trash, and other extraneous matter.
4. Legally dispose of waste material, including grass, vegetation, and turf, off Owner's property.

C. Finish Grading: Grade planting areas to a smooth, uniform surface plane with loose, uniformly fine texture. Grade to within plus or minus 1/2 inch of finish elevation. Roll and rake, remove ridges, and fill depressions to meet finish grades. Limit fine grading to areas that can be planted in the immediate future.

D. Moisten prepared lawn areas before planting if soil is dry. Water thoroughly and allow surface to dry before planting. Do not create muddy soil.

E. Restore areas if eroded or otherwise disturbed after finish grading and before planting.

3.2 SEEDING

A. Sow seed at the rate of 6 lb/1000 sq. ft.

B. Rake seed lightly into top 1/8 inch of topsoil, roll lightly, and water with fine spray.

C. Protect seeded areas with slopes not exceeding 1:6 by spreading straw mulch. Spread uniformly at a minimum rate of 2 tons/acre to form a continuous blanket 1-1/2 inches in loose depth over seeded areas. Spread by hand, blower, or other suitable equipment.

3.3 SODDING

A. Lay sod within 24 hours of harvesting. Do not lay sod if dormant or if ground is frozen or muddy.

B. Lay sod to form a solid mass with tightly fitted joints. Butt ends and sides of sod; do not stretch or overlap. Stagger sod strips or pads to offset joints in adjacent courses. Avoid damage to subgrade or sod during installation. Tamp and roll lightly to ensure contact with subgrade, eliminate air pockets, and form a smooth surface. Work sifted soil or fine sand into minor cracks between pieces of sod; remove excess to avoid smothering sod and adjacent grass.

1. Lay sod across angle of slopes exceeding 1:3.
2. Anchor sod on slopes exceeding 1:6 with wood pegs spaced as recommended by sod manufacturer but not less than 2 anchors per sod strip to prevent slippage.

C. Saturate sod with fine water spray within two hours of planting. During first week, water daily or more frequently as necessary to maintain moist soil to a minimum depth of 1-1/2 inches (38 mm) below sod.

3.4 SATISFACTORY LAWNS

A. Satisfactory Seeded Lawn: At end of maintenance period, a healthy, uniform, close stand of grass has been established, free of weeds and surface irregularities, with coverage exceeding 90 percent over any 10 sq. ft. and bare spots not exceeding 5 by 5 inches.

B. Satisfactory Sodded Lawn: At end of maintenance period, a healthy, well-rooted, even-colored, viable lawn has been established, free of weeds, open joints, bare areas, and surface irregularities.

C. Reestablish lawns that do not comply with requirements and continue maintenance until lawns are satisfactory.

END OF SECTION 329200

SECTION 329300 – LANDSCAPING

PART 1 - GENERAL

1.1 SUMMARY

A. Section Includes:
1. Fine grading of areas.

2. Preparation of soil prior to planting.

3. New topsoil.

4. Planting of trees and shrubs indicated on the drawings and including the following:

a. Coniferous evergreens.

5. Furnishing and installation of miscellaneous landscaping materials.

6. Initial maintenance of trees.

B. Related Sections:

1. Section 312001 - Earthwork

1.2 REFERENCES

A. ANSI Z60.1-1990 -- American Standard for Nursery Stock; 1990.

B. ASTM D 2980-71(90) -- Standard Test Method for Volume Weights, Water-Holding Capacity, and Air Capacity of Water-Saturated Peat Materials; 1971 (Reapproved 1990).

C. COE CW-02215 -- Civil Works Construction Guide Specification for Geotextiles Used as Filters; Corps of Engineers; March 1986.

D. Rules for Testing Seeds; Association of Official Seed Analysts; 1991.

1.3 SUBMITTALS

A. Certificates of Inspection: Certified product analysis and any certificates required by law to accompany shipments.

B. Topsoil: Submit soil analysis report.

1. Location of proposed source and proposed stripping depth.

2. Report of detailed soil analysis: Show percentage of each constituent, pH, and other pertinent soil characteristics. Include recommendations of quantity of each soil amendment and fertilizer required to achieve optimum soil conditions.

C. Planting Schedule: Indicate beginning and ending dates of planting for each material.

D. Maintenance Instructions: Written instructions for the owner's maintenance of landscaping. Include initial maintenance recommendations, 12 month, and long term recommendations.

Submit prior to acceptance of landscaping.

1.4 QUALITY ASSURANCE

A. General: Comply with government regulations applicable to landscaping.

B. Employ qualified, experienced landscape personnel.

C. No substitutions permitted of plant materials. Provide the materials indicated.

D. Provide plant materials complying with ANSI Z60.1.

E. Inspection:

1. The architect retains the right to inspect planting materials at any time for compliance with the contract documents including but not limited to latent defects and lack of protection or maintenance and to reject defective material.

a. Immediately dispose of rejected materials off the site.

1.5 DELIVERY, STORAGE, AND HANDLING

A. Packaged Materials: Deliver in original unopened containers displaying weight, guaranteed chemical analysis, and manufacturer's name or furnish in bulk with appropriate certificates. Protect from deterioration.

B. Ground Cover and Plants: Schedule delivery to avoid storage on site. If planting does not occur on same day as delivery, store in a location protected from sun and weather.

1. Do not shock trees and shrubs by pruning before delivery.

2. Cover to protect stock during transport.

3. Bind stock to protect branches, bark, and overall shape during transport.

4. Balled and burlapped stock: Provide freshly dug stock unless otherwise approved.

5. Do not drop stock. Load and unload with care.

6. Deliver stock only after soil has been prepared. Schedule harvesting and delivery in quantities suitable for immediate planting upon arrival. Plant immediately. If planting cannot be accomplished immediately, provide shade, protect from wind, protect balls or roots from drying by covering at all times with moist saw dust, wood chips, shredded bark, peat moss, or other similar mulching material.

1.6 PROJECT CONDITIONS

A. Schedule and coordinate with work of other sections and local seasons.

1. Utilities: Locate and avoid damage to underground utilities.

B. Excavation: Notify the architect of any unforeseen conditions affecting plant growth (buried debris, etc.).

C. Planting Time:

1. For each type of landscape work required, place or install materials during normal planting seasons of the project locale.

    a. Flowering trees and shrubs: Plant during the spring planting season unless otherwise approved.

D. Sequencing: Establish final grades, then plant trees and lawns unless otherwise approved. Protect earlier plantings from later planting operations and repair any resulting damage.

1.7 WARRANTIES

A. General: Warranties shall be in addition to, and not a limitation of, other rights the owner may have against the contractor under the contract documents.

B. Trees: Warrant trees through specified maintenance period and until final acceptance.

C. Replace unsatisfactory landscape materials (those dead or lacking vigor) with healthy, vigorous materials. Plant only during next occurring specified planting season.

1. At the direction of the architect, either replace materials in borderline condition or extend the warranty covering such materials for one full growing season.

    a. Another inspection will be conducted at the end of the extended warranty period, if any, to determine acceptance or rejection.

2. Only one replacement (per tree, shrub, plant, etc.) will be required at the end of the warranty period, except for losses or replacements due to failure to comply with specified requirements.

1.8 MAINTENANCE

A. Trees: Maintain trees from immediately after planting until the latest of: the period required to establish acceptable healthy plant growth, substantial completion of the project, or 60 days after date of substantial completion of planting.

1. Provide all maintenance necessary to achieve healthy plant growth.

    a. Water regularly and on a timely basis.

    b. Remove weeds, replace mulch, and restore eroded watering basins around trunks if needed.

2. Adjust stakes and guys to provide proper support and replant trees and shrubs to vertical position if necessary.

3. Renew wrappings if damaged.

4. Apply insecticides or fungicides if necessary to prevent or correct insect infestation and disease.

PART 2 - PRODUCTS

2.1 TOPSOIL

A. Topsoil at Site: Verify suitability and quantity of topsoil stockpiled at site. If sufficient quantities of suitable topsoil are not available at site, provide topsoil from approved off site sources.

B. Topsoil: Fertile agricultural soil, typical for locality, capable of sustaining vigorous plant growth and taken from a drained site; free of subsoil, rocks larger than 2 inches in diameter, clay, toxic matter, plants, weeds, and roots.

2.2 TREES

A. Provide nursery or plantation grown stock unless specifically indicated otherwise.

1. General: Well-branched and well-formed, sound, vigorous, healthy, and free from disease, sun-scald, windburn, abrasion, and harmful insects or insect eggs. Healthy, normal and unbroken root systems.

2. Deciduous trees and shrubs: Symmetrically developed, of uniform habit of growth, with straight boles or stems, and free from objectionable disfigurements.

3. Coniferous evergreen trees and shrubs: Well-developed symmetrical tops with typical spread of branches for each particular species or variety.

4. Provide stock complying in all respects with ANSI Z60.1 and in sizes indicated, measured in accordance with ANSI Z60.1. Larger sizes with larger roots and root containment may be furnished if approved by the architect.

a. Do not spread or compress branches when measuring. Measure main body of branches; do not measure extreme tip to tips of single branches.
b. Pruning to size is not acceptable.
c. Up to 4 inches caliper, measure caliper at 6 inches above ground. Measure larger calipers at 12 inches above ground.

B. Shade and Flowering Trees: Balled and burlapped (B & B).

1. Equally sized container grown stock will also be accepted.

C. Deciduous Shrubs: Balled and burlapped (B & B).

1. Equally sized container-grown stock will also be accepted.

D. Coniferous Evergreens: Balled and burlapped (B & B).

E. Broadleaf Evergreens: Balled and burlapped (B & B).

2.3 MISCELLANEOUS LANDSCAPE MATERIALS

A. Gravel: Clean, durable, graded crushed rock.
1. Size: 1-1/2 inches maximum, 3/4 inch minimum.

B. Decorative Mulch: Free of deleterious materials, suitable for top dressing of plantings, and consisting of the following:

1. Ground or shredded bark.

C. Filter Fabric: Nonwoven polyester or polypropylene fabric having an equivalent opening size (EOS) of 80 to 120 in accordance with COE CW-02215.

D. Anti-Erosion Mulch: Salt hay, sudan-grass hay, broomsedge hay, or threshed straw of oats, wheat, rye, barley, or rice that is clean and free of seeds, noxious weeds, mold or other objectionable material.

E. Staking and Guying Materials:

1. Stakes: Pressure-preservative treated lumber of sizes indicated; sound, straight, and free of splits and knots larger than 1/4 of the least nominal dimension of the piece. Sharpen end and chamfer sides of driven end to prevent splitting from off-center hammer strikes.

2. Wire: Galvanized mild steel wire, minimum 12 gage; provide double strands.

3. Hose: Rubber or plastic garden hose.

4. Turnbuckles: Aluminum or galvanized steel.

F. Tree Wrap Tape: Nurseryman's standard protective tape.

2.4 PLANTING SOIL

A. Provide planting soil mix consisting of topsoil and amendments as recommended by soils analysis laboratory report.

B. Mixing: Mix topsoil and amendments thoroughly to provide uniform mixture, using drum-type mechanical mixer, powered rotary tiller, or other means acceptable to the architect.

PART 3 - EXECUTION

3.1 PREPARATION

A. Layout: Lay out planting locations, mark with stakes, adjust locations if requested, and obtain the architect's approval of locations before proceeding.

B. Preparation of Planting Soil:

1. Before mixing in drum-type mixer or during tillage operation, clean topsoil of sticks, stones, clay lumps, vegetable matter, and other objectionable objects.

2. Mix topsoil, soil amendments, and fertilizers at the specified rates to achieve a uniform mixture.

3. Pit and trench type backfill: Mix planting soil and stockpile at site, ready for use as backfill.

4. Planting beds: Either mix planting soil before placing or uniformly spread fertilizer and soil amendments on surface of in-place topsoil and till thoroughly before planting.

5. Lawns: Either mix planting soil before placing or uniformly spread fertilizer and soil amendments on surface of in-place topsoil and till thoroughly before planting.

C. Preparation for Planting Lawns:

1. Prepare only those areas that will be planted presently.

2. Preparation of stripped areas: Till subgrade to a depth of at least 6 inches.

   a. Place topsoil in two approximately equal lifts, working first lift into subgrade before placing second lift.
   b. Spread second lift to comply with finished lines, grades, and elevations required after allowing for settlement.

3. Fine-grade, roll, rake, and drag lawn areas cutting down high spots and filling low spots, leaving a smooth, even surface of fine-textured soil complying with required grades.

4. If dry, water full depth of topsoil thoroughly but not excessively and allow surface moisture to dry before planting.

5. Just before planting, correct any lawn areas that have been eroded, rutted or settled.

D. Preparation of Planting Beds:
   1. Excavate beds to depth necessary to receive 8 inches of planting soil. Dispose of excavated soil off site.

E. Planters:

   1. Spread 4-inch-thick layer of gravel in planter.

   2. Install layer of filter fabric, lapping ends and edges a minimum of 3 inches. Turn edges up sides of planters a minimum of 2 inches and secure with adhesive tape, fasteners, or both, as applicable.

   3. Place planting soil in lifts not to exceed 6 inches in thickness; compact lightly.

      a. Fill planters to within 1-1/2 inches of top of planter, allowing for settlement of planting soil.

F. Excavation for Trees and Shrubs:

   1. Pits, beds, and trenches: Excavate with sides vertical, bottom flat but with high center for drainage. Deglaze sides and loosen bottom.

   2. Minimum dimensions, individual pits:

      a. Diameter:
         1. Ball or root spreads up to 2 feet: Twice root spread.
         2. Ball or root spreads 2 to 4 feet: Two feet greater than root spread.
         3. Ball or root spreads over 4 feet: 1-1/2 times root spread.

      b. Depth: To allow 9 inches of compacted planting soil beneath roots or ball and to set collar 1 inch below finish grade.

   3. Remove all excavated subsoil from the site and dispose of properly. Do not backfill excavation with subsoil.

   4. Check permeability of soil and pre-moisten soil by filling excavation with water. If excavation does not percolate within 2 hours, inform the architect and obtain his instructions before planting.

3.2 PLANTING TREES AND SHRUBS

A. Setting Layer: Place and compact a layer of planting soil, of thickness indicated, in bottom of excavation.

B. Balled and Burlapped Stock: Set plants in excavation with top of ball to match adjacent finished grade. Add soil as required under ball to achieve plumb.

1. Remove burlap from top and sides of ball; retain burlap on bottom of ball.

2. Place backfill in 2- to 3-inch-thick layers. Work each layer by hand to compact backfill and eliminate voids. Maintain plumb during backfilling.

3. When backfilling is approximately 2/3 complete, saturate backfill with water and repeat until no more can be absorbed.

4. Place and compact remainder of backfill and water again.

C. Container-Grown Plants: Place and backfill as specified for balled and burlapped stock, and as follows:

1. Immediately before placing, remove bottom of container.

a. Cans: Cut two sides from bottom of can to within 1 inch of top, using approved can cutter.

2. Set and plumb plants. Place initial backfill and remove sides of container, taking care to avoid damage to root system.

D. Form watering basin around trunk with backfill holding at least 2-1/2 gallons for shrubs and 5 gallons for trees. Apply moisture retaining mulch.

E. Pruning: Remove dead or broken branches. Prune to retain typical growth habit of plants with as much height and spread as practicable. Make cuts with sharp instruments and flush with trunk or adjacent branch. Do not remove leaders from trees.

3.3 STAKING AND GUYING OF TREES

A. Protection of Tree Trunks:
1. Inspect and, if necessary, treat trunks for physical damage or insect infestation.
2. Wrap trunks of trees of 2 inches and greater caliper using wrapping tape. Wrap from base to first branches.

B. Guy and stake trees the same day as planting.

C. Refer to drawings and schedules for guying and staking requirements.

3.4 PLANTING GROUND COVER AND SMALL PLANTS

A. Individual Plants:

1. Space plants as indicated on drawings or in schedule.

2. Open holes sized to accommodate roots, place plants at proper elevation, and backfill with planting soil, working carefully to avoid damage to roots and to leave no voids. Build up a small water basin of planting soil around each plant.

B. Immediately after planting water well. Do not wash soil onto crowns of plants.

C. Protection: Provide daily watering, straw mulch, or both, as necessary to protect plants from sun and wind until plants are fully recovered from transplanting shock.

1. Remove straw mulch when plants have attained healthy growth.

D. Weed Killer: At the contractor's option, apply a pre-emergence weed killer; replace plants adversely affected.

3.5 INSTALLATION OF MISCELLANEOUS MATERIALS

A. Decorative Mulch:

1. Apply 4-inch-thick layer of mulch in the following areas:

a. Individual planting pits.
b. Planting beds.

2. Work mulch into top of planting soil backfill; finish level with adjacent grade.

END OF SECTION 329300

SECTION 330500 - COMMON WORK RESULTS FOR UTILITIES

PART 1 - GENERAL

1.1 RELATED DOCUMENTS

A. Drawings and general provisions of the Contract, including General and Supplementary Conditions and Division 01 Specification Sections, apply to this Section.

1.2 SUMMARY

A. This Section includes the following:

1. Piping joining materials.
2. Transition fittings.
3. Sleeves.
4. Grout.
5. Flowable fill.
6. Piped utility demolition.
7. Piping system common requirements.
8. Equipment installation common requirements.

1.3 DEFINITIONS

A. Exposed Installations: Exposed to view outdoors or subject to outdoor ambient temperatures and weather conditions.

B. Concealed Installations: Concealed from view and protected from weather conditions and physical contact by building occupants but subject to outdoor ambient temperatures. Examples include installations within unheated shelters.

C. PVC: Polyvinyl chloride plastic.

1.4 QUALITY ASSURANCE

A. Steel Support Welding: Qualify procedures and personnel according to AWS D1.1/D1.1M, "Structural Welding Code - Steel."

1.5 DELIVERY, STORAGE, AND HANDLING

A. Deliver pipes and tubes with factory-applied end caps. Maintain end caps through shipping, storage, and handling to prevent pipe end damage and to prevent entrance of dirt, debris, and moisture.

B. Store plastic pipes protected from direct sunlight. Support to prevent sagging and bending.

1.6 COORDINATION

A. Coordinate installation of required supporting devices and set sleeves in poured-in-place concrete and other structural components as they are constructed.

PART 2 - PRODUCTS

2.1 PIPING JOINING MATERIALS

A. Pipe-Flange Gasket Materials: Suitable for chemical and thermal conditions of piping system contents.

1. ASME B16.21, nonmetallic, flat, asbestos free, 1/8-inch maximum thickness, unless otherwise indicated.
   a. Full-Face Type: For flat-face, Class 125, cast-iron and cast-bronze flanges.
   b. Narrow-Face Type: For raised-face, Class 250, cast-iron and steel flanges.
2. AWWA C110, rubber, flat face, 1/8 inch thick, unless otherwise indicated; and full-face or ring type, unless otherwise indicated.

B. Flange Bolts and Nuts: ASME B18.2.1, carbon steel, unless otherwise indicated.

C. Plastic, Pipe-Flange Gasket, Bolts, and Nuts: Type and material recommended by piping system manufacturer, unless otherwise indicated.

D. Solder Filler Metals: ASTM B 32, lead-free alloys. Include water-flushable flux according to ASTM B 813.

E. Solvent Cements for Joining Plastic Piping:

1. PVC Piping: ASTM D 2564. Include primer according to ASTM F 656.

2.2 TRANSITION FITTINGS

A. Transition Fittings, General: Same size as, and with pressure rating at least equal to and with ends compatible with, piping to be joined.

B. AWWA Transition Couplings NPS 2 and Larger:

1. Description: AWWA C219, metal sleeve-type coupling for underground pressure piping.

C. Plastic-to-Metal Transition Fittings:

1. Description: PVC one-piece fitting with manufacturer's Schedule 80 equivalent dimensions; one end with threaded brass insert, and one solvent-cement-joint or threaded end.

D. Plastic-to-Metal Transition Unions:

1. Description: MSS SP-107, PVC four-part union. Include brass threaded end, solvent-cement-joint or threaded plastic end, rubber O-ring, and union nut.

E. Flexible Transition Couplings for Underground Non-pressure Drainage Piping:

1. Description: ASTM C 1173 with elastomeric sleeve, ends same size as piping to be joined, and corrosion-resistant metal band on each end.

2.3 SLEEVES

A. Steel Pipe Sleeves: ASTM A 53/A 53M, Type E, Grade B, Schedule 40, galvanized, plain ends.

B. PVC Pipe Sleeves: ASTM D 1785, Schedule 40.

2.4 GROUT

A. Description: ASTM C 1107, Grade B, non-shrink and nonmetallic, dry hydraulic-cement grout.

1. Characteristics: Post hardening, volume adjusting, non-staining, noncorrosive, nongaseous, and recommended for interior and exterior applications.
2. Design Mix: 5000-psi, 28-day compressive strength.
3. Packaging: Premixed and factory packaged.

2.5 FLOWABLE FILL

A. Description: Low-strength-concrete, flowable-slurry mix.

1. Cement: ASTM C 150, Type I, Portland.
2. Density: 115- to 145-lb/cu. ft.
3. Aggregates: ASTM C 33, natural sand, fine and crushed gravel or stone, coarse.
4. Aggregates: ASTM C 33, natural sand, fine.
5. Admixture: ASTM C 618, fly-ash mineral.
6. Water: Comply with ASTM C 94/C 94M.
7. Strength: 100 to 200 psig at 28 days.

PART 3 - EXECUTION

3.1 PIPED UTILITY DEMOLITION

A. Disconnect, demolish, and remove piped utility systems, equipment, and components indicated to be removed.

1. Piping to Be Removed: Remove portion of piping indicated to be removed and cap or plug remaining piping with same or compatible piping material.

B. If pipe, insulation, or equipment to remain is damaged in appearance or is unserviceable, remove damaged or unserviceable portions and replace with new products of equal capacity and quality.

3.2 PIPING INSTALLATION

A. Install piping according to the following requirements and utilities Sections specifying piping systems.

B. Drawing plans, schematics, and diagrams indicate general location and arrangement of piping systems. Indicated locations and arrangements were used to size pipe and calculate friction loss, expansion, pump sizing, and other design considerations. Install piping as indicated unless deviations to layout are approved on the Coordination Drawings.

C. Install piping indicated to be exposed and piping in equipment rooms and service areas at right angles or parallel to building walls. Diagonal runs are prohibited unless specifically indicated otherwise.

D. Install piping to permit valve servicing.

E. Install piping at indicated slopes.

F. Install piping free of sags and bends.

G. Install fittings for changes in direction and branch connections.

H. Select system components with pressure rating equal to or greater than system operating pressure.

I. Install sleeves for pipes passing through concrete and masonry walls and concrete floor and roof slabs.

1. Cut sleeves to length for mounting flush with both surfaces.
   a. Exception: Extend sleeves installed in floors of equipment areas or other wet areas 2 inches above finished floor level.
2. Install sleeves in new walls and slabs as new walls and slabs are constructed.
   a. Steel Pipe Sleeves: For pipes smaller than NPS 6.
   b. Steel Sheet Sleeves: For pipes NPS 6 and larger, penetrating gypsum-board partitions.

J. Verify final equipment locations for roughing-in.

K. Refer to equipment specifications in other Sections for roughing-in requirements.

3.3 PIPING JOINT CONSTRUCTION

A. Join pipe and fittings according to the following requirements and utilities Sections specifying piping systems.

B. Ream ends of pipes and tubes and remove burrs. Bevel plain ends of steel pipe.

C. Remove scale, slag, dirt, and debris from inside and outside of pipe and fittings before assembly.

D. Threaded Joints: Thread pipe with tapered pipe threads according to ASME B1.20.1. Cut threads full and clean using sharp dies. Ream threaded pipe ends to remove burrs and restore full ID. Join pipe fittings and valves as follows:

1. Apply appropriate tape or thread compound to external pipe threads unless dry seal threading is specified.
2. Damaged Threads: Do not use pipe or pipe fittings with threads that are corroded or damaged. Do not use pipe sections that have cracked or open welds.

E. Flanged Joints: Select appropriate gasket material, size, type, and thickness for service application. Install gasket concentrically positioned. Use suitable lubricants on bolt threads.

F. Soldered Joints: Apply ASTM B 813 water-flushable flux, unless otherwise indicated, to tube end. Construct joints according to ASTM B 828 or CDA's "Copper Tube Handbook," using lead-free solder alloy (0.20 percent maximum lead content) complying with ASTM B 32.

G. Plastic Piping Solvent-Cemented Joints: Clean and dry joining surfaces. Join pipe and fittings according to the following:

1. Comply with ASTM F 402 for safe-handling practice of cleaners, primers, and solvent cements.
2. PVC Pressure Piping: Join schedule number ASTM D 1785, PVC pipe and PVC socket fittings according to ASTM D 2672. Join other-than-schedule-number PVC pipe and socket fittings according to ASTM D 2855.
3. PVC Non-pressure Piping: Join according to ASTM D 2855.

3.4 PIPING CONNECTIONS

A. Make connections according to the following, unless otherwise indicated:

1. Install unions, in piping NPS 2 and smaller, adjacent to each valve and at final connection to each piece of equipment.
2. Install flanges, in piping NPS 2-1/2 and larger, adjacent to flanged valves and at final connection to each piece of equipment.

3.5 EQUIPMENT INSTALLATION

A. Install equipment level and plumb, unless otherwise indicated.

B. Install equipment to facilitate service, maintenance, and repair or replacement of components. Connect equipment for ease of disconnecting, with minimum interference with other installations. Extend grease fittings to an accessible location.

C. Install equipment to allow right of way to piping systems installed at required slope.

3.6 GROUTING

A. Mix and install grout for equipment base bearing surfaces, pump and other equipment base plates, and anchors.

B. Clean surfaces that will come into contact with grout.

C. Provide forms as required for placement of grout.

D. Avoid air entrapment during placement of grout.

E. Place grout, completely filling equipment bases.

F. Place grout on concrete bases and provide smooth bearing surface for equipment.

G. Place grout around anchors.

H. Cure placed grout.

END OF SECTION 330500

SECTION 331400 – WATER UTILITY TRANSMISSION & DISTRIBUTION

PART 1 - GENERAL

1.01 DUCTILE IRON PIPE

A. DESCRIPTION

1. The work under this item shall include the installation of ductile iron pipe and appurtenances as shown on the contract drawings and as specified herein.

B. QUALITY ASSURANCE

1. All work shall be performed in accordance with the latest editions of the standards of the American Water Works Association and the American National Standards Institute.

2. Referenced Standards:

a. ANSI/AWWA C111/A21.11; Rubber-Gasket Joints for Ductile-Iron and Gray-Iron Pressure Pipe and Fittings.

b. ANSI/AWWA C104/A21.4; Cement-Mortar Lining for Ductile-Iron Pipe and Fittings for Water.

c. ANSI/AWWA C151/A21.51; Ductile-Iron Pipe, Centrifugally Cast in Metal Molds or Sand Lined Molds, for Water or Other Liquids.

d. ANSI/AWWA C600/M41; Installation of Ductile-Iron Water Mains and their Appurtenances.

C. SUBMITTALS

1. Test of pipe and fittings shall be made by the pipe manufacturer in accordance with ASTM Standards. Certified copies of the tests made by the manufacturer or by a competent commercial laboratory approved by the Engineer shall be submitted to the Engineer prior to the first shipment of pipe.

D. MATERIALS

1. All materials in contact with potable water shall comply with the Safe Drinking Water Act “No Lead” requirements.

2. Ductile Iron Pipe and Fittings

a. Ductile iron pipe shall be Class 52 mechanical joint (MJ) pipe in accordance with ANSI/AWWA C151/A21.51. The pipe shall be cast utilizing iron conforming to Grade 60-42-10 and shall meet all applicable ANSI specifications. Pipe shall be furnished in nominal eighteen foot (18 ft) or twenty foot (20 ft) laying lengths. Pipe class, weight, and material shall be conspicuously marked by the manufacturer on the exterior of the pipe.

b. The lining of the pipe shall consist of cement-mortar of double thickness to the ends of the individual lengths of pipe and shall be in accordance with ANSI A 21.4. A bituminous interior seal coat shall be applied to the cement-mortar lining. The exterior of the pipe

shall receive standard asphaltic coating. The weight, class, and pipe material shall be conspicuously indicated by the manufacturer on the outside of the pipe.

c. All ductile iron pipe joints shall be mechanical joint type. Mechanical joint fittings shall conform to ANSI/AWWA C153/A21.53 and shall be rated for a minimum 350 psi working pressure.

d. Gaskets, glands, bolts, and lubricants shall be as recommended by the pipe manufacturer and suitable for mechanical joint installation.

e. Cut pipe ends and field modifications shall be completed in accordance with the manufacturer's written instructions.

E. RESPONSIBILITY FOR MATERIAL

1. The Contractor shall be responsible for all material and shall place at his own expense all such materials found defective in manufacture or damaged in handling.

   All material shall be carefully examined for defects, and no material shall be installed which is known to be defective. Any defective, damaged, or unsound material, as determined by the Engineer, shall be removed and replaced with sound material at the Contractor's expense. Any materials found defective shall be promptly removed from the site.

2. All materials furnished by the Contractor shall be delivered and distributed at the site by the Contractor. All pipe, fittings, valves, and accessories shall be loaded and unloaded by lifting with hoists or skidding, so as to avoid shock or damage. Under no circumstances shall such materials be dropped. Pipe handled on skidways shall not be skidded or rolled against pipe already on the ground.

3. The pipe and fittings shall be so handled that the coating and lining will not be damaged. If, however, any part of the coating or lining is damaged, the repair shall be made by the Contractor at his expense in a manner satisfactory to the Owner and Engineer.

F. DEFECTIVE PIPE AND FITTINGS

1. The Owner and Engineer reserves the right to reject all defective pipe and fittings shipped to the job site or stored on the site. The Engineer shall examine the pipe and fittings and determine if the pipe is damaged prior to installation of the pipe in the trench. All defective pipe or fittings shall be laid aside for final inspection by the Engineer to determine if corrective repairs may be made, or the piece is to be rejected. The Engineer shall determine the extent of the repairs, and the Contractor shall comply in all respects. Defective pipe shall be classified as follows:

   a. Damage to interior and/or exterior paint seal coats.
   b. Damage to interior cement-mortar lining.
   c. Insufficient cement-mortar lining thickness.
   d. Poor quality interior paint seal coat to the extent that it causes a partial obstruction in the pipe round.
   e. Pipe out of round.
   f. Damaged pipe barrel area to a point where pipe class thickness is reduced.

G. PIPE INSTALLATION

1. The new water main shall be installed in complete sections between valves. Once the entire section is installed, it shall be tested in accordance with Testing and Disinfection. After the new pipe has satisfied the required tests, the services on the existing pipe shall be disconnected and connected to the new pipe as shown on the contract drawings and as specified herein. Upon approval of the testing, disinfection and new connections, the new pipe shall be put into service.

    a. Cleaning Pipe and Fittings: All lumps, blisters, and excess coating shall be removed from the bell-and-spigot end of each piece of ductile iron pipe and each fitting. The inside of the bell or the coupling grooves and rubber rings shall be thoroughly wiped clean and dry before the pipe is laid.

    b. Alignment and Grade

        i. All pipes shall be laid and maintained, as shown on the Contract Drawings, with joints centered, spigots forced home, and all valve and hydrants stems plumb. No deviation shall be made from the required line and grade, except with the approval of the Engineer.

        ii. Where the proposed route of the pipe is on a curve, the Contractor may, after receiving approval from the Engineer, deflect the pipe at the joints. In no case shall the pipe be deflected more than the maximum permissible deflection recommended by the pipe manufacturer and, in case the curve is too sharp for the allowable deflections, short lengths of pipe may be used upon approval of the Engineer.

        iii. Particular care shall be exercised so that no high points are established where air can accumulate. All water mains shall have a minimum cover of 4'-0", and a maximum cover of 6'-0".

    c. Lower Water Main Material into Trench

        i. All pipe, fittings and appurtenances shall be carefully lowered into the trench piece by piece by means of a derrick, ropes, or other suitable tools or equipment, in such a manner as to prevent damage to water main materials and protective coatings and linings. Under no circumstances shall water main materials be dropped or dumped into the trench.

    d. Laying Pipe

        i. No pipe shall be laid in wet trench conditions or on a frozen trench bottom or when, in the opinion of the Engineer, trench or weather conditions are unsuitable.

        ii. Every precaution shall be taken to prevent foreign material from entering the pipe while it is being placed. During Laying operation, no debris, tools, clothing, or other material shall be placed in the pipe.

        iii. The pipe shall be supported in its full length on the project line and uniform grade of the trench. A bell-hole shall be dug at each joint, said hole being of sufficient size to insure the proper making up of each joint. After placing a length of pipe in the trench, the spigot end shall be centered in the bell and the pipe forced home.

        iv. Care shall be exercised when making each joint, and all joints shall be made in accordance with the pipe supplier's specifications and in accordance with the following instructions.

v. The cutting of the pipe shall be carried out only with the equipment specifically designed for that purpose. The use of chisels, hand saws, or hand held power saws will not be permitted.

vi. Ductile iron pipe shall be laid with the bell ends facing in the direction of laying, unless otherwise shown on the Contract Drawings, or directed by the Engineer.

vii. At the end of each day's operation, the Contractor shall properly cover all openings of installed mains, valves and fittings to prevent entry of foreign matter, animals or debris.

e. Mechanical Joints

i. With a wire brush, thoroughly clean the bell and spigot end of the pipe of all foreign matter and wash them with soapy water.

ii. Slip the gland and gasket over the plain end and seat the spigot end in the bell (the small end of the gasket and the lip on the gland shall face the bell).

iii. Push gasket into position with fingers, making sure it is evenly seated.

iv. Move gland into position for bolting, insert bolts, and make all nuts finger-tight, keeping the spigot centrally located within the bell.

v. The following table is used in determining the wrench to be used in tightening the bolts:

Bolt Size, Inches	Length of Wrench, Inches
5/8	8
3/4	10
1	12
1-1/4	14

vi. When tightening bolts, it is essential that the gland be brought up toward the pipe flange evenly, maintaining approximately the same distance between the gland and the face of the flange at all points around the socket. This is to be done by partially tightening the bottom bolt first, then the top bolt, then the bolts at either side and last, the remaining bolts. Repeat the cycle until all bolts are within the range of the torques listed below:

Bolt Size, Inches	Torque Range (ft-lbs)
5/8	40 - 60
3/4	60 - 90
1	70 - 100
1-1/4	90 – 120

vii. If effective sealing is not obtained at the maximum torque indicated above, the joint must be disassembled and reassembled after thorough cleaning. Under no circumstances are bolts to be overstressed.

viii. Overnight and at other times when pipe laying is not in progress, the open ends of the pipe will be closed by a watertight plug or other means approved by the engineer.

f. Temporary Reaction Backing

i. Where the water mains must be tested before connections to existing mains can be installed, temporary reaction backing or restraining type plugs shall be installed. Careful attention shall be given to the design and installation of the temporary reaction backing, so that it will resist the test pressure without movement.

g. Pipe Bedding and Backfill

i. Bedding shall be three-quarter inch (3/4") clean crushed stone as specified herein. Immediately after the pipe is brought to final position, it shall be thoroughly secured and properly bedded, and ample support shall be provided to prevent settlement or disturbances.

ii. Backfill shall be compacted backfill. As soon as practicable, after the pipe or masonry has been placed and the masonry has acquired a suitable degree of hardness, the backfilling shall begin and shall thereafter be prosecuted expeditiously.

h. Crossing Utility Lines

i. When crossing over an existing water main, pipe, conduit, or other utility, the new pipe shall be encased in concrete or supported by other means as required or as directed by the Engineer or as shown on the Contract Drawings. In this case, the cover on the pipe may be decreased as required if approved by the Engineer.

ii. When crossing under an existing pipe, conduit, structure, or other utility, the existing pipe shall be cradled or supported by other means without transmitting the load to the new pipe and the method of construction shall be as required or as directed by the Engineer or as shown on the Contract Drawings.

iii. In all cases, the pipe shall be properly brought back to the original grade with a smooth transition as directed by the Engineer.

iv. In all cases of crossing an existing utility, pipe, conduit, or structure, approval of the construction method and the crossing design shall be obtained from the Owner of the utility, pipe, conduit, or structure, if such approval is required. The Contractor shall be responsible for coordination with the appropriate authorities.

i. Separation Between Water Lines and Sewers

i. Horizontal Separation:

a. Whenever Possible, water mains shall be laid at least ten feet (10') horizontally from an existing or proposed sewer. Should local conditions prevent a lateral separation of ten feet (10'), a water main may be laid closer than ten feet (10') to a water main if:

1. It is laid in a separate trench.

2. The elevation of the top (crown) of the sewer is at least eighteen inches (18") below the bottom (invert) of the water main.

ii. Vertical Separation:

a. Whenever water mains must cross over sewers, the water main shall be laid at such an elevation that the top of the sewer is at least eighteen inches (18") below the bottom of the water main. When the above requirements cannot be met, the water main shall be relocated to provide this separation for a distance of ten feet (10') extending on each side of the sewer. One full length of water main should be centered over the sewer so that both joints will be as far from the sewer as possible.

iii. Unusual Conditions:

a. Where conditions prevent the minimum vertical separation above from being maintained, or when it is necessary for the water main to pass under a sewer or drain, the water main shall be laid with mechanical joint pipe, and the pipe should extend on each side of the crossing until the normal distance from the water main to the sewer or drain line is at least ten feet (10'). In making such a crossing, it is preferable to center a length of water main pipe over the sewer to be crossed, so that the joints will be equi-distance from the sewer and as remote therefrom as possible. Where a water main must cross under a sewer, a vertical separation of eighteen inches (18”) between the bottom of the sewer and the top of the water main should be maintained, with adequate support for the larger-sized sewer lines to prevent them from settling on and breaking the water main.

b. Where conditions prevent the minimum horizontal and vertical separation above from being maintained, the water main shall be laid with mechanical joint pipe until the normal distance from the water main to the sewer is achieved.

iv. Sewer Manholes:

a. New water pipe shall not pass through or come into contact with any part of a sewer manhole.

j. Connection to Existing Pipes: The Contractor shall advise affected residents twenty-four (24) hours in advance as to the time and duration of the proposed shutdown and all related work.

i. The Contractor shall provide the necessary pipe and all else necessary fittings to join the existing system with the pipe and fittings specified herein.

ii. The Contractor shall notify the Engineer forty-eight (48) hours in advance as to when a shutdown of the existing water mains is needed to make connections from the new water pipes to the existing water distribution system.

iii. All shutdowns of the existing water mains shall be executed by the Township. In general, the shutdown of existing water mains can be made during normal working hours. However, where these shutdowns of existing water mains cannot be made during normal working hours without interruptions to water consumers, the Contractor shall schedule his work so that the shutdowns are made during periods of low demand which may include weekends or night hours. No additional payments shall be made for the costs of installing connections to existing water mains during the low demand periods.

iv. Parallel connections between old pipe and new pipe shall be connected to the existing valves with reducers and as manufactured by "Dresser" or approved equal. All joints will be made as specified under this item.

v. Perpendicular connections between old pipe and new pipe shall be made with wet taps as specified under Item 5 "Tapping Valves and Sleeves".

vi. Prior to connecting to existing mains and where shown on the Plans, the Contractor will provide a blow-off branch fitting. The fitting will be installed so the invert of the branch is at the same elevation as the invert of the main. The branch will have a minimum diameter of four inches (4") and will be fitted with a gate valve and sufficient pipe to allow discharge of water at a point that will not cause flooding of the trench. Upon completion of flushing and disinfection, the Contractor will remove the temporary blow-off fitting and will make the connections to the existing water main.

k. Reconnection of Water Service Lines: The Contractor shall connect proposed service lines to the newly installed water mains. The Contractor shall be responsible for all tapping connections to the new mains. The connection of service connections shall be as indicated on the drawing.

1.02 DUCTILE IRON PIPE FITTINGS

A. DESCRIPTION

1. The Contractor will, under this item, furnish all the materials for and properly connect in place at the locations shown on the Plans or as directed, all ductile iron mechanical joint fittings which are necessary for the proper completion of the work under this contract. Also furnish the necessary pipe, length, restraints, gaskets, jointing material, encasement, and accessories to complete the installation as shown or directed.

B. MATERIALS

1. All ductile iron pipe joints shall be mechanical joint type. Mechanical joint fittings shall conform to ANSI/AWWA C153/A21.53 and shall be rated for a minimum 350 psi working pressure.

2. Where indicated on the plans, the Contractor will furnish a hydrant valve anchoring tee of the specified class.

3. The minimum pressure rating for fittings will be as follows:

	Ductile Iron
2” - 24" Diameter and Smaller	350 PSI
30" - 48” Diameter and Larger	250 PSI

4. All ductile iron fittings will be lined with Portland cement mortar in accordance with "Cement Mortar Lining for Ductile Iron Pipe and Fittings for Water", ANSI A21.4, and will be double thickness.

5. The outside of all fittings will be coated with coal tar pitch varnish.

6. A bituminous interior seal coat shall be applied to the cement mortar lining.

C. METHODS OF CONSTRUCTION

1. Perform all work in accordance with the specifications for “Ductile Iron Pipe". Thrust blocking shall be in accordance with “Concrete”.

1.03 GATE VALVES

A. DESCRIPTION

1. The work under this item shall include all labor, materials, equipment, and all else necessary for full compliance with the contract drawings, as specified herein and other contract requirements, or as directed by the Engineer for the installation of gate valves and valve boxes.

B. QUALITY ASSURANCES

1. All work under this contract shall be performed in conformance with the standards of the American Water Works Association and the American National Standards Institute.

2. Referenced Standards:

a. ANSI/AWWA C500-86; Gate Valves for Water and Sewerage Systems.

b. AWWA C515-20; Reduced-Wall, Resilient-Seated Gate Valves for Water Supply Service.

C. SUBMITTALS

1. Shop drawings at a scale sufficiently large enough to show pertinent aspects of the gate valves and valve boxes shall be submitted along with appropriate manufacturer's literature.

D. MATERIALS

1. All gate valves shall be mechanical joint type, resilient seated gate valves conforming to AWWA C515. The body bonnet, gate and O-ring packing plate will be gray or ductile iron. The valves will be furnished with non-rising stems, O-ring stuffing boxes, resilient valve seats, wedge disc and guides. Valve stems, glands and bushings shall be bronze.

2. Valves shall be furnished with a two (2") inch square operating nut and shall open by turning to the left (counter clockwise) and shall have an arrow indicating the direction of the opening.

3. Valves shall be designated for a working pressure of 350 psi and capable of withstanding a 700 psi test pressure.

4. Each valve shall be equipped with a cast iron, adjustable valve box and cover, with a standard coal tar foundry dip and the word WATER cast in the cover. Valve boxes shall be a minimum of eight (8") inch diameter and shall be an adjustable screw type with box extending from the surface to three (3") inches above the valve bonnet base.

5. Concrete seats for valves shall conform to “Concrete”.

6. Valve exteriors shall be painted with asphalt varnish.

7. Local Water Department standards shall be met. Gate valves shall have mechanical joint fittings with retainer glands.

E. RESPONSIBILITY FOR MATERIALS

1. All valves shall be loaded and unloaded by lifting with hoists or skidding. Valves shall be so handled that coating will not be damaged.

2. Valves shall be kept drained and stored before installation in a manner protecting them from damage due to freezing of trapped water.

F. INSTALLATION

1. Valves shall be installed at specified locations with joints centered and valve stems plumb. No deviation shall be made from the required line and grade except with approval of the Engineer.

2. All valves shall be carefully lowered into the trench by means of a derrick, ropes, or other suitable tools or equipment, in such a manner as to prevent damage to valves and protective coatings. Under no circumstances shall valves be dropped or dumped into the trench.

3. Valves shall be set and jointed to pipe in the manner heretofore specified for “Ductile Iron Pipe”.

4. All valves shall be provided with a valve box. The tops of the valve boxes shall be set neatly to the grade of the surface of finished grade, unless directed otherwise by the Engineer. The valve box shall not transfer shock or stress to the valve and shall be centered and plumb over the valve.

1.04 FIRE HYDRANTS

A. DESCRIPTION

1. The work under this item shall include all labor, material, equipment, and all else necessary for full compliance with the contract drawings, as specified herein, and other contract requirements, or as directed by the Engineer for the installation of new fire hydrants. Fire hydrants shall conform to the standards set by the local Water and Fire Departments.

B. QUALITY ASSURANCES

1. All work and materials shall be in conformance with the latest edition of the standards of the American Water Works Association and the American National Standards Institute.
2. Referenced Standards:

   a. ANSI/AWWA C502-85; Dry Barrel Fire Hydrants.

C. SUBMITTALS

1. Shop drawings at a scale sufficiently large enough to show pertinent aspects of the fire hydrants shall be submitted along with appropriate manufacturer's literature.

D. MATERIALS

1. All fire hydrants will conform to the requirements of Dry Barrel Fire Hydrants, AWWA C502. Hydrants will be designed for a working water pressure of 150 psi and will be provided with a six (6") inch inlet connection of either bell or mechanical joint as shown on the plans. Provide lugs on the inlet connection when required for strapping the hydrant to the main. All hydrants will be furnished with a compression type 4 1/2" main valve, having an opening size as shown on the plans, an automatic positive action drain valve, two section barrel with breakable

flange and stem coupling and "O" ring seals. Hydrants will be opened by turning to the left (counter clockwise) and operating, and nozzle cap nuts will conform to those in service in the distribution system where the hydrant is to be installed. The barrel will be of sufficient length for installation in a trench of the required depth.

2. The hydrants will be furnished with one, four and one half (4 1/2") inch steamer and two, two and one half (2 1/2") inch nozzles and be National Standard Thread.

3. Valve stems, main valve seats, operating nuts, and hose and pumper nozzles will be made of bronze.

4. All hydrants will be given two shop coats of a durable weatherproof enamel, above the ground line. The barrel shall be painted yellow and the bonnets painted with white reflective paint.

5. Fire hydrants shall meet local Water Department and Fire Department Standards. Fire hydrants shall be per Fire Department selected manufacturer and model.

E. METHOD OF CONSTRUCTION

1. New hydrants will be located as shown on the drawings or as directed.

2. All hydrants will stand plumb and will have their nozzles parallel with or at right angles to the curb with the pumper nozzle facing the curb. Hydrants having two nozzles 90° apart will be set with each nozzle facing the curb at an angle of 45°. Hydrants will be set to the established grade, with pumper nozzles at least twelve (12") inches above ground, as shown or as directed by the Engineer. Each hydrant will be connected to the main with a six (6") inch ductile iron branch controlled by an independent six (6") inch gate valve, except as otherwise directed.

3. Wherever a hydrant is set in soil that is pervious, drainage will be provided at the base of the hydrant by placing three quarter (3/4") inch crushed stone from the bottom of the trench to at least six (6") inches above the waste opening in the hydrant, and to a distance of one (1') foot around the elbow. No drainage system will be connected to a sewer. Wherever a hydrant is set in clay or other impervious soil, a drainage pit two (2') feet in diameter and three (3') deep will be excavated below each hydrant and filled compactly with three quarter (3/4") inch crushed stone, under and around the elbow of the hydrant and to a level of six (6") inches above the waste opening. No drainage pit will be connected to a sewer. Where directed by the Engineer, the hydrant drain hole will be drilled, tapped, and fitted with a cast iron plug.

1.05 TESTING AND DISINFECTING

A. DESCRIPTION

1. Under this item the contractor will furnish all the materials and equipment for and will properly disinfect and test all the pipes as required and described in these specifications.

2. Contractor shall coordinate with the health department and comply with and assist with all permits, fees, and inspections required.

B. METHOD

1. The contractor will be required to perform a hydrostatic pressure test. The work will be done in a manner approved by the engineer.

2. The contractor will be required to test the entire length of the new water main.

C. HYDROSTATIC TESTS

1. Test restrictions:
    a. The test pressure shall not be less than 1.25 times the stated working pressure of the pipeline measured at the highest elevation along the test section and not less than 1.5 times the stated working pressure at the lowest elevation of the test section.
    b. The test pressure shall not exceed the thrust restraint design pressures or 1.5 times the pressure rating of the pipe or joint, whichever is less (as specified by the manufacturer).
    c. Valves shall not be operated in either direction at a differential pressure exceeding the rated valve working pressure. A test pressure greater than the rated valve working pressure can result in trapped test pressure between the gates of a double-disc gate valve. For tests exceeding the rated valve working pressure, the test setup should include a provision, independent of the valve, to reduce the line pressure to the rated valve working pressure on completion of the test. The valve can then be opened enough to equalize the trapped pressure with the line pressure, or the valve can be fully opened if desired.
    d. The test pressure shall not exceed the rated working pressure of the valves when the pressure boundary of the test section includes closed resilient seated gate valves or butterfly valves.
2. Test setup and pressurization: Following the installation of any new pipeline, all newly laid pipe or any valved section thereof shall be subjected to a hydrostatic pressure test. Each valved section of pipeline shall be slowly filled with water. When venting air from pipelines, it is important to limit the pipeline fill rate to avoid excessive surge pressures when the water reaches the air venting opening(s). The specified test pressure shall be applied using a suitable pump connected to the pipeline. (Note: The specified test pressure shall be based on the elevation of the lowest point of the pipeline or section under test and corrected to the elevation of the test gauge—see Sec. 1.05-C.1, Test Restrictions.) Before applying the specified test pressure, air shall be expelled completely from the pipeline section under test. If permanent air vents are not located at all high points, corporation stops shall be installed at these points to expel any air as the line is filled with water. Corporation stops should be rated for the design pressure of the pipeline. Exceeding design pressure is not recommended and should be checked with the product manufacturer before proceeding. Following removal of any air, the corporation stops shall be closed and the test pressure applied (at the conclusion of the pressure test, the corporation stops shall be removed and the pipe plugged, or left in place as required by the purchaser's documents). After filling the pipeline and before application of the test pressure, the test section shall be maintained at the working pressure for a sufficient period of time for it to stabilize with respect to line movement under pressure, water absorption by the lining, and so on. This may require several cycles of pressurizing and bleeding trapped air prior to beginning the test. The hydrostatic test shall be of at least a 2-hour duration. The test pressure shall not vary by more than ±5 psi (34.5 kPa) for the duration of the test. Test pressure shall be maintained within this tolerance by adding makeup water through the pressure test pump into the pipeline. The amount of makeup water added shall be accurately measured (in gallons or liters per hour) by suitable methods and shall not exceed the applicable testing allowance as specified in Tables 5A or 5B (end of section 1.05-C.).
3. Examination: Any exposed pipe, fittings, valves, hydrants, and joints shall be examined carefully during the pressure test. Any damaged or defective pipe, fittings, valves, hydrants, or joints that are discovered during or following the pressure test shall be repaired or replaced with reliable material, and the test shall be repeated until satisfactory results are obtained.

4. Testing allowance: Testing allowance shall be defined as the maximum quantity of makeup water that can be added into a pipeline undergoing hydrostatic pressure testing, or any valved section thereof, to maintain pressure within ±5 psi (34.5 kPa) of the specified test pressure (after the pipeline has been filled with water and the air has been expelled*). The testing allowance is exceeded if the quantity of makeup water is greater than that determined by the following formula:

   In inch–pound units,
   Eq 1: $L = (SD \sqrt{P}) / 148{,}000$

   Where:
   L = testing allowance (makeup water) (gph)
   S = length of pipe tested (ft)
   D = nominal diameter of the pipe (in.)
   P = average test pressure during the hydrostatic test (psi [gauge])

   In metric units,
   Eq 2: $Lm = (SD \sqrt{P}) / 794{,}797$

   Where:
   Lm = testing allowance (makeup water) (L/hr)
   S = length of pipe tested (m)
   D = nominal diameter of the pipe (mm)
   P = average test pressure during the hydrostatic test (kPa)

   a. These formulas are based on a testing allowance of 10.49 gpd/mi/in. (0.971 L/d/km/mm) of nominal diameter at a pressure of 150 psi (1,034 kPa). Values of testing allowance at various pressures are shown in Tables 5A and 5B. When testing against closed metal-seated valves, an additional testing allowance per closed valve of 0.0078 gal/hr/in. (1.2 mL/hr/mm) of nominal valve size shall be allowed. When hydrants are in the test section, the test shall be made against the main valve in the hydrant.
   b. Acceptance of installation. Acceptance shall be determined on the basis of testing allowance only. If any test of a new pipeline requires a quantity of makeup water greater than the testing allowance specified in Sec. 1.05-C.4, repairs or replacements shall be accomplished in accordance with the purchaser's documents. All visible leaks are to be repaired regardless of the allowance used for testing.

Table 5A Hydrostatic testing allowance per 1,000 ft of pipeline*—gph†

Average Test Pressure, *psi*	Nominal Pipe Diameter, *in.*																	
	3	4	6	8	10	12	14	16	18	20	24	30	36	42	48	54	60	64
450	0.43	0.57	0.86	1.15	1.43	1.72	2.01	2.29	2.58	2.87	3.44	4.30	5.16	6.02	6.88	7.74	8.60	9.17
400	0.41	0.54	0.81	1.08	1.35	1.62	1.89	2.16	2.43	2.70	3.24	4.05	4.86	5.68	6.49	7.30	8.11	8.65
350	0.38	0.51	0.76	1.01	1.26	1.52	1.77	2.02	2.28	2.53	3.03	3.79	4.55	5.31	6.07	6.83	7.58	8.09
300	0.35	0.47	0.70	0.94	1.17	1.40	1.64	1.87	2.11	2.34	2.81	3.51	4.21	4.92	5.62	6.32	7.02	7.49
275	0.34	0.45	0.67	0.90	1.12	1.34	1.57	1.79	2.02	2.24	2.69	3.36	4.03	4.71	5.38	6.05	6.72	7.17
250	0.32	0.43	0.64	0.85	1.07	1.28	1.50	1.71	1.92	2.14	2.56	3.21	3.85	4.49	5.13	5.77	6.41	6.84
225	0.30	0.41	0.61	0.81	1.01	1.22	1.42	1.62	1.82	2.03	2.43	3.04	3.65	4.26	4.86	5.47	6.08	6.49
200	0.29	0.38	0.57	0.76	0.96	1.15	1.34	1.53	1.72	1.91	2.29	2.87	3.44	4.01	4.59	5.16	5.73	6.12
175	0.27	0.36	0.54	0.72	0.89	1.07	1.25	1.43	1.61	1.79	2.15	2.68	3.22	3.75	4.29	4.83	5.36	5.72
150	0.25	0.33	0.50	0.66	0.83	0.99	1.16	1.32	1.49	1.66	1.99	2.48	2.98	3.48	3.97	4.47	4.97	5.30
125	0.23	0.30	0.45	0.60	0.76	0.91	1.06	1.21	1.36	1.51	1.81	2.27	2.72	3.17	3.63	4.08	4.53	4.83
100	0.20	0.27	0.41	0.54	0.68	0.81	0.95	1.08	1.22	1.35	1.62	2.03	2.43	2.84	3.24	3.65	4.05	4.32

* If the pipeline under test contains sections of various diameters, the testing allowance will be the sum of the testing allowance for each size.
† Calculated on the basis of Eq 1.

Table 5B Hydrostatic testing allowance per 300 m of pipeline*—L/hr†

Average Test Pressure *kPa*	Nominal Pipe Diameter, *mm*																	
	76	102	152	203	254	305	356	406	457	508	610	762	914	1,067	1,219	1,400	1,500	1,600
3,000	1.57	2.11	3.14	4.20	5.25	6.31	7.36	8.39	9.45	10.50	12.61	15.75	18.90	22.06	25.20	28.94	31.01	33.06
2,800	1.52	2.04	3.04	4.05	5.07	6.09	7.11	8.11	9.13	10.15	12.18	15.22	18.26	21.31	24.35	27.96	29.96	31.96
2,600	1.46	1.96	2.93	3.91	4.89	5.87	6.85	7.81	8.80	9.78	11.74	14.67	17.59	20.54	23.46	26.95	28.87	30.79
2,400	1.41	1.89	2.81	3.75	4.70	5.64	6.58	7.51	8.45	9.39	11.28	14.09	16.90	19.73	22.54	25.89	27.74	29.59
2,200	1.35	1.81	2.69	3.59	4.50	5.40	6.30	7.19	8.09	8.99	10.80	13.49	16.18	18.89	21.58	24.79	26.56	28.33
2,000	1.28	1.72	2.57	3.43	4.29	5.15	6.01	6.85	7.71	6.58	10.30	12.86	15.43	18.01	20.58	23.63	25.32	27.01
1,800	1.22	1.63	2.43	3.25	4.07	4.88	5.70	6.50	7.32	8.14	9.77	12.20	14.64	17.09	19.52	22.42	24.02	25.62
1,600	1.15	1.54	2.29	3.06	3.83	4.60	5.37	6.13	6.90	7.67	9.21	11.50	13.80	16.11	18.40	21.14	22.65	24.16
1,400	1.07	1.44	2.15	2.87	3.59	4.31	5.03	5.73	6.45	7.17	8.62	10.76	12.91	15.07	17.22	19.77	21.18	22.60
1,200	0.99	1.33	1.99	2.65	3.32	3.99	4.65	5.31	5.98	6.64	7.98	9.96	11.95	13.95	15.94	18.31	19.61	20.92
1,000	0.91	1.22	1.81	2.42	3.03	3.64	4.25	4.85	5.45	6.06	7.28	9.10	10.91	12.74	14.55	16.71	17.90	19.10
800	0.81	1.09	1.62	2.17	2.71	3.26	3.80	4.33	4.88	5.42	6.51	8.14	9.76	11.39	13.01	14.95	16.01	17.08
600	0.70	0.94	1.41	1.88	2.35	2.82	3.29	3.75	4.23	4.70	5.64	7.05	8.45	9.87	11.27	12.94	13.87	14.79

* If the pipeline under test contains sections of various diameters, the testing allowance will be the sum of the testing allowance for each size.
† Calculated on the basis of Eq 2.

D. CLEANING AND DISINFECTION

Clean and disinfect water-distribution piping as follows, and prepare reports of purging and disinfecting activities. Materials shall comply with the requirements of the Safe Drinking Water Act and other federal regulations for potable water, wastewater, and reclaimed water systems as applicable.

1. Forms of Chlorine for Disinfection: The forms of chlorine that may be used in the water main disinfection operations are liquid chlorine (gas), sodium hypochlorite solution, and calcium hypochlorite granules or tablets.

a. Liquid chlorine (gas). Liquid chlorine (gas) conforming to ANSI/AWWA B301 contains 100 percent available chlorine. Liquid chlorine (gas) shall be used only (1) in combination with appropriate gas-flow chlorinators and ejectors to provide a controlled high-concentration solution feed to the water to be chlorinated; (2) under the direct supervision of someone familiar with the biological, chemical, and physical properties of liquid chlorine (gas) and who is trained and equipped to handle any emergency that may arise; and (3) when appropriate safety practices are observed to protect working personnel and the public. Makeshift equipment is not acceptable when liquid chlorine (gas) cylinders are used.
b. Sodium hypochlorite. Sodium hypochlorite conforming to ANSI/ AWWA B300 is available in liquid form in glass, rubber-lined, or plastic containers typically ranging in size from 1 qt (0.95 L) to 5 gal (18.92 L). Containers of 30 gal (113.6 L) or larger may be available in some areas. Sodium hypochlorite contains approximately 5 percent to 15 percent available chlorine, and the storage conditions and time must be controlled to minimize its deterioration. (Available chlorine is expressed as a percent of weight when the concentration is 5 percent or less, and usually as a percent of volume for higher concentrations. Percent × 10 = grams of available chlorine per liter of hypochlorite.)
c. Calcium hypochlorite. Calcium hypochlorite conforming to ANSI/AWWA B300 is available in granular form or in 5-g tablets and must contain approximately 65 percent available chlorine by weight. The material should be stored in a cool, dry, and dark environment to minimize its deterioration. Caution: Tablets dissolve in approximately 7 hr and must be given adequate contact time. Do not use calcium hypochlorite intended for swimming pool disinfection, as this material has been sequestered and is extremely difficult to eliminate from the pipe after the desired contact time has been achieved.

2. General Considerations for All Methods of Chlorine Disinfection:
   a. General. Four methods of chlorination are explained in this section: tablet, continuous feed, slug, and spray. The tablet method gives an initial chlorine dose of 25 mg/L; the continuous-feed method gives a 24-hr chlorine residual of not less than 10 mg/L; the slug method gives a 3-hr exposure of not less than 50 mg/L free chlorine; and the spray method gives a 30-min exposure of not less than 200 mg/L free chlorine. Caution should be used with highly chlorinated water when conducting hydrostatic pressure testing and with high- volume flushing of water.
   b. Flushing. Potable water shall be used for disinfection, hydrostatic pressure testing, and flushing. Drainage should take place away from the construction or work area. Adequate drainage must be provided during flushing. If applicable, the valve(s) isolating the main from existing system should be locked out and tagged out to prevent unintentional release of the elevated chlorine residual water used for disinfection.
   c. Dechlorination. When dechlorination is required, it is recommended that any high-velocity flushing be completed prior to disinfection. Dechlorination equipment may not be capable of handling high flows with high levels of chlorine.

3. Tablet/Granule Method of Chlorination
   a. Tablet method. The tablet method consists of placing calcium hypochlorite granules or tablets in the water main during installation and then filling the main with potable water to create a chlorine solution. This method may be used only if the pipes and appurtenances are kept clean and dry during construction. Warning: This procedure must not be used on solvent-welded plastic or on screwed-joint steel pipe because of the danger of fire or explosion from the reaction of the joint compounds with the calcium hypochlorite.
   b. Placement of calcium hypochlorite granules during construction. Calcium hypochlorite granules shall be placed at the upstream end of the first section of pipe, at the upstream end of each branch main, and at 500-ft (150-m) intervals. The quantity of granules at each location shall be as shown in Table 1, at the bottom of the section.
   c. Placement of calcium hypochlorite tablets during construction. Calcium hypochlorite tablets (5-grams) shall be placed in the upstream end of each section of pipe to be disinfected, including branch lines. Also, at least one tablet shall be placed in each hydrant branch and in other appurtenances. The number of 5-g tablets required for each

pipe section shall be 0.0012 d2L rounded to the next higher integer, where d is the inside pipe diameter, in inches, and L is the length of the pipe section, in feet. Table 2 (at the bottom of the section) shows the number of tablets required for commonly used sizes of pipe. Calcium hypochlorite tablets shall be attached by an adhesive meeting the requirements of NSF/ANSI 61. There shall be adhesive only on the broadside of the tablet attached to the surface of the pipe. Attach tablets inside and at the top of the main. If the tablets are attached before the pipe section is placed in the trench, their positions shall be marked on the pipe exterior to indicate that the pipe has been installed with the tablets at the top.

d. Filling and contact time. When installation has been completed, the main shall be filled with water such that the full pipe velocity is no greater than 1 ft/sec (0.3 m/sec). Fill rate must be carefully controlled to ensure tablets do not come loose from pipe. Precautions shall be taken to ensure that air pockets are eliminated. As an optional procedure, if required by the purchaser, water used to fill the new main shall be supplied through a temporary connection that shall include an appropriate cross-connection control device, consistent with the degree of hazard, for backflow protection of the active distribution system (see Figure 1 at the bottom of this section). The chlorinated water shall remain in the pipe for at least 24 hr. If the water temperature is less than 41°F (5°C), the water shall remain in the pipe for at least 48 hr. A detectable free chlorine residual (≥0.2 mg/L) shall be found at each sampling point after the 24- or 48-hr period.

4. Continuous-Feed Method of Chlorination
    a. Continuous-feed method. The continuous-feed method consists of completely filling the main with potable water, removing air pockets, then flushing the completed main to remove particulates, and refilling the main with potable water that has been chlorinated to 25 mg/L. After a 24-hr holding period in the main there shall be a free chlorine residual of not less than 10 mg/L.
    b. Preliminary flushing. Before the main is chlorinated, it shall be filled with potable water to eliminate air pockets and flushed to remove particulates. The flushing velocity in the main shall not be less than 3.0 ft/sec (0.91 m/sec) unless the purchaser determines that conditions do not permit the required flow to be discharged to waste. Table 3 shows the rates of flow required to produce a velocity of 3.0 ft/sec (0.91 m/sec) in commonly used sizes of pipe. (Note: flushing is no substitute for preventive measures during construction. Certain contaminants, such as caked deposits, resist flushing at any feasible velocity, and pigging of the main, or other suitable method acceptable to the purchaser, may be required.) Where such flow rates are not possible, flushing at the maximum expected flow rate for the line for 2–3 volumes may be acceptable. For larger mains, pigging (or other suitable method acceptable to the purchaser) is an option in place of high velocity flushing. For 24-in. (600-mm) or larger diameter mains, an acceptable alternative to flushing is to broom-sweep the main, carefully removing sweepings prior to filling and chlorinating the main. Warning: OSHA requirements for confined space need to be addressed before entering a pipeline.
    c. Procedure for chlorinating the main.
        i. Potable water may be supplied from a temporary backflow-protected connection to the existing distribution system or other supply source approved by the purchaser. The cross-connection control device shall be consistent with the degree of hazard for backflow protection of the active distribution system (see Figure 1 at the bottom of this section). The flow shall be at a constant, measured rate into the newly installed water main. In the absence of a meter, the rate may be approximated using a Pitot gauge in the discharge, measuring the time to fill a container of known volume, or measuring the trajectory of the discharge and using the formula shown in Figure 2. The main should undergo hydrostatic testing prior to disinfection.
        ii. At a point not more than 10 ft (3 m) downstream from the beginning of the new main, water entering the new main shall receive a dose of chlorine fed at a

constant rate such that the water will have not less than 25 mg/L free chlorine. To ensure that an appropriate concentration is achieved, the free chlorine concentration shall be measured at regular time intervals in accordance with the procedures described in Standard Methods for the Examination of Water and Wastewater or AWWA Manual M12, or using appropriate chlorine test kit (see appendix A).

iii. Table 4 gives the amount of chlorine required for each 100 ft (30.5 m) of pipe for various pipe diameters. Solutions with a minimum 1 percent chlorine concentration may be prepared with sodium hypochlorite or calcium hypochlorite. The latter solution requires 1 lb (454 g) of calcium hypochlorite in 8 gal (30.3 L) of water.

iv. Chlorine application shall not cease until the entire main is filled with chlorinated water. The chlorinated water shall be retained in the main for at least 24 hr, during which time valves and hydrants in the treated section shall be operated to ensure disinfection of the appurtenances. At the end of this 24-hr period, the treated water in all portions of the main shall have a residual of not less than 10 mg/L of free chlorine.

v. Direct-feed chlorinators, which operate solely from gas pressure in a chlorine cylinder, shall not be used for the application of liquid chlorine (gas). (The danger of using direct-feed chlorinators is that water pressure in the main can exceed gas pressure in the chlorine cylinder. This allows backflow of water into the cylinder, resulting in severe cylinder corrosion and the escape of chlorine gas.) The preferred equipment for applying liquid chlorine (gas) is a solution-feed, vacuum-operated chlorinator and a booster pump. The vacuum-operated chlorinator mixes the chlorine gas in solution water; the booster pump then injects the chlorine solution into the main to be disinfected. Hypochlorite solutions may be applied to the water main with a chemical-feed pump designed for feeding chlorine solutions. Feed lines shall be made of material capable of withstanding the corrosion caused by the concentrated chlorine solutions and the maximum pressures that may be created by the pumps. All connections shall be checked for tightness before the solution is applied to the main.

5. Slug Method of Chlorination

a. Slug method. The slug method consists of completely filling the main to eliminate air pockets; flushing the main to remove particulates; then slowly flowing through the main a slug of water dosed with chlorine to a concentration of 100 mg/L. The slow rate of flow ensures that all parts of the main and its appurtenances will be exposed to the highly chlorinated water for a period of not less than 3 hr.

b. Preliminary flushing. Same as Sec. 1.05-D.4.b.

c. Procedure for chlorinating the main.

i. Potable water may be supplied from a temporary backflow-protected connection to the existing distribution system or other supply source approved by the purchaser. The cross-connection control device shall be consistent with the degree of hazard for backflow protection of the active distribution system (see Figure 1). The flow shall be at a constant, measured rate into the newly installed water main. In the absence of a meter, the rate may be approximated using a Pitot gauge in the discharge, measuring the time to fill a container of known volume, or measuring the trajectory of the discharge and using the formula shown in Figure 2. The main should undergo hydrostatic testing prior to disinfection.

ii. At a point not more than 10 ft (3 m) downstream from the beginning of the new main, water entering the new main shall receive a dose of chlorine fed at a constant rate such that the water will have not less than 100 mg/L free chlorine. To ensure that this concentration is achieved, the free chlorine concentration shall be measured at regular time intervals sufficient to guide the completion of

the successful loading of the target chlorine concentration. The chlorine shall be applied continuously and for a sufficient period to develop a solid column, or slug, of chlorinated water that will, as it moves through the main, expose all interior surfaces to a concentration of approximately 100 mg/L for at least 3 hr.

iii. The free chlorine residual shall be measured in the slug as it moves through the main. If at any time it drops below 50 mg/L, the flow shall be stopped; chlorination equipment shall be relocated at the head of the slug; and, as flow resumes, chlorine shall be applied to restore the free chlorine in the slug to not less than 100 mg/L.

iv. As chlorinated water flows past fittings and valves, related valves and hydrants shall be operated so as to disinfect appurtenances and pipe branches.

6. Spray Disinfection for Large Transmission Lines
   a. For very large transmission mains (where personnel or equipment may safely enter the pipe), spray disinfection may be an appropriate and efficient means of achieving disinfection. For this method, refer to ANSI/AWWA C652, Sec. 4.3.2 (Disinfection of Water Storage Facilities; Chlorination Method 2). In general, once pipe is cleaned, spray a 200-mg/L free chlorine solution on all surfaces. After 30 min, fill line and sample as described in Sec. 1.05-E.1.
7. Basic Disinfection Procedure for New Mains
   a. The basic disinfection procedure consists of:
      i. Inspecting materials to be used to ensure their integrity.
      ii. Preventing contaminating materials from entering the water main during storage, construction, or repair and noting potential contamination at the construction site.
      iii. Removing, by flushing or other means, those materials that may have entered the water main or appurtenances.
      iv. Preventing contamination of existing mains from cross-connection during flushing, pressure testing, and disinfection.
      v. Pressure testing the water main to ensure the main meets the purchaser's allowable leakage rate. Hydrostatic pressure tests should be conducted with potable water.
      vi. Chlorinating and adequately documenting the process used for disinfection.
      vii. Flushing the chlorinated water from the main. Refer to ANSI/AWWA C655 Field Dechlorination for dechlorination procedures, if dechlorination is required.
      viii. Determining the bacteriological quality of water samples collected from the pipe by laboratory test after disinfection.
      ix. Final connecting of the newly disinfected water main to the active distribution system without sacrificing sanitary practices and conditions.
8. Preventive and Corrective Measures During New Construction
   a. General. Heavy particulates generally contain bacteria and prevent even very high chlorine concentrations from contacting and killing these organisms. Therefore, the procedures of this section must be observed to ensure that a water main and its appurtenances have been thoroughly cleaned for the final disinfection by chlorination. Also, any connection of a new water main to the active distribution system before the receipt of satisfactory bacteriological samples may constitute a cross-connection. Therefore, the new main must be isolated until bacteriological tests described in Section 5 of this standard are satisfactorily completed.
   b. Keeping pipe clean and dry. The interiors of pipes, fittings, and valves shall be protected from contamination.
      i. Openings. Openings in the pipeline shall be closed with watertight plugs when pipe laying is stopped at the close of the day's work or for other reasons, such as rest breaks or meal periods. Rodent-proof plugs may be used when watertight plugs are not practicable and when thorough cleaning will be performed by flushing or other means.

ii. Stringing pipe. Pipe delivered for construction shall be strung to minimize the entrance of foreign material.
iii. Delays. Delay in placement of delivered pipe invites contamination. The more closely the rate of delivery is correlated to the rate of pipe laying, the lower the risk of contamination.

c. Joints. Joints of pipe in the trench shall be completed before work is stopped. If water accumulates in the trench, the plugs shall remain in place until the trench is free of standing water and mud that may enter the pipe.
d. Packing materials. Yarning or packing material shall consist of molded or tubular rubber rings, rope of treated paper, or other approved materials. Materials such as jute or hemp shall not be used. Packing material shall be handled in a manner that avoids contamination.
e. Sealing materials. No contaminated material or any material capable of supporting growth of microorganisms shall be used for sealing joints. Sealing material or gaskets shall be handled in a manner that avoids contamination. The lubricant used in the installation of sealing gaskets shall be suitable for use in potable water meeting the requirements of NSF/ANSI 61 and shall not contribute odors. It shall be delivered to the job in closed containers and shall be kept clean and applied with dedicated clean applicators.
f. Cleaning and swabbing. If dirt enters the pipe, it shall be removed and the interior pipe surface swabbed with a minimum 1 percent free chlorine disinfecting solution. If, in the opinion of the purchaser, the dirt remaining in the pipe will not be removed using the flushing operation, the interior of the pipe shall be cleaned using mechanical means, such as a hydraulically propelled foam pig (or other suitable device acceptable to the purchaser) in conjunction with the application of a minimum 1 percent free chlorine disinfecting solution. The cleaning method used shall not force mud or debris into the interior pipe-joint spaces and shall be acceptable to the purchaser.
g. Wet-trench construction. If it is not possible to keep the pipe and fittings dry during installation, a scour flush at 3.0 ft/sec (0.91 m/sec) or greater for a minimum of three pipe volumes (see Table 3) followed by slug or continuous-feed chlorination and bacteria testing before release is required. For larger mains, pigging or other suitable method acceptable to the purchaser is an option in place of high-velocity flushing.
h. Flooding by storm or accident during construction. If the main is flooded during construction, it shall be cleared of the floodwater by draining and flushing with potable water until the main is clean. The section exposed to the floodwater shall then be filled with a chlorinated potable water that, at the end of a 24-hr holding period, will have a free chlorine residual of not less than 25 mg/L. The chlorinated water may then be drained or flushed from the main. If chemical contamination occurs, such as a hydraulic oil leak or petroleum product spill, the pipe sections exposed to the contamination should be replaced and not reused for potable water applications. After construction is completed, the main shall be disinfected using the continuous-feed, slug, or spray methods.
i. Backflow protection (optional).* As an optional procedure (if required by the purchaser), the new water main shall be kept isolated from the active distribution system using a physical separation (see Figure 1) until satisfactory bacteriological testing has been completed and the disinfection water flushed out. Water required to fill the new main for hydrostatic pressure testing, disinfection, and flushing shall be supplied through a temporary connection between the distribution system and the new main or other supply source approved by the purchaser. The temporary connection shall include an appropriate cross-connection control device consistent with the degree of hazard (a double check valve assembly or a reduced pressure zone assembly) and shall be disconnected (physically separated) from the new main during the hydrostatic pressure test. It will be necessary to reestablish the temporary connection after completion of the hydrostatic pressure test to flush out the disinfectant water prior to final connection of the new main to the distribution system. Note: Exposure to high levels of chlorine or high pH

can cause severe irritation to customers. Also, the chlorinated water can be high in disinfection by-products.

9. Final Flushing for New Mains
    a. Clearing the main of heavily chlorinated water. After the applicable retention period, heavily chlorinated water should not remain in prolonged contact with pipe. In order to prevent damage to the pipe lining or to prevent corrosion damage to the pipe itself, the heavily chlorinated water shall be flushed from the main fittings, valves, and branches until chlorine measurements show that the concentration in the water leaving the main is no higher than that generally prevailing in the distribution system or that is acceptable for domestic use.
    b. Disposing of heavily chlorinated water. The environment to which the chlorinated water is to be discharged shall be inspected. If there is any possibility that the chlorinated discharge will cause damage to the environment, a neutralizing chemical shall be applied to the water to be wasted to thoroughly neutralize the residual chlorine (see ANSI/AWWA C655 for neutralizing chemicals). Where necessary, federal, state, local, or provincial regulatory agencies should be contacted to determine special provisions for the disposal of heavily chlorinated water.
10. Final Connections to Existing Mains
    a. Water mains and appurtenances must be completely installed, flushed, disinfected, and satisfactory bacteriological sample results received prior to permanent connections being made to the active distribution system. Sanitary construction practices must be followed during installation of the final connection so that there is no contamination of the new or existing water main with foreign material or groundwater.
    b. Connections equal to or less than one pipe length (generally ≤20 ft [6 m]). The new pipe, fittings, and valve(s) required for the connection may be spray disinfected or swabbed with a minimum 1 percent solution of chlorine just before being installed, if the total length of the connection from the end of a new main to the existing main is equal to or less than 20 ft (6 m).
    c. Connections greater than one pipe length (generally >20 ft [6 m]). The pipe required for the connection must be set up aboveground, disinfected, and bacteriological samples taken, as described in Section 5, if the total length of the connection from the end of a new main to the existing main is greater than 20 ft (6 m). After satisfactory bacteriological sample results have been received for the predisinfected pipe, the pipe can be used in connecting the new main to the active distribution system. Between the time the satisfactory bacteriological sample results are received and the time that the connection piping is installed, the ends of the piping must be sealed with plastic wraps, watertight plugs, or caps.
11. Disinfection Procedures When Cutting Into or Repairing Existing Pipe
    a. General. Refer to preventive and corrective measures described previously in 1.05-D.8.b / c / d / e. Follow all personal protection precautions when working with chlorine solutions.
    b. Basic disinfection. Work should follow basic disinfection and contamination prevention procedures:
        i. Preventing contaminants from entering the existing pipe during the repair such as by maintaining positive pressure in the leaking pipe until the repair site on the pipe is fully exposed, by maintaining a dewatered trench, and by keeping all pipe materials being used in the repair in a clean and sanitary condition.
        ii. Inspecting and cleaning, followed by disinfection of spraying or swabbing with a minimum 1 percent chlorine solution:
            1. Exposed portions of existing pipe interior surfaces
            2. Pipe materials used in the repair
            3. Handheld materials and tools used to make the repair
        iii. As appropriate, advising affected customers to adequately flush their service lines upon return to service.

c. Selection of disinfection procedure. The disinfection procedure selected should be determined by the conditions and severity of the main break. The procedures described in 1.05-D.11.c.1 to 1.05-D.11.c.3 describe the contamination risks and the associated disinfection and sampling requirements for different scenarios of pipeline repair. Specific situations not captured below need to be evaluated and the appropriate disinfection and sampling methods followed.

   i. Controlled pipe repair without depressurization. In this situation, activities are well controlled and a full shutdown is not needed, thus maintaining positive pressure to the area of shutdown and around the break site at all times. The repair site is exposed and the trench is adequately dewatered so that the repair site can be cleaned and disinfected by spraying or swabbing with a minimum 1 percent chlorine solution. The water main is then returned to service with flushing to obtain three volumes of water turnover, making sure that the flushed water is visually clear. No bacteriological testing is necessary. It is advisable to check for a typical system chlorine residual, and if not found, to continue flushing until residuals are restored to levels maintained in the distribution system by the water utility—if the system operates with a disinfectant residual.

   ii. Controlled pipe repair with depressurization after shutdown. In this situation, after the repair site has been exposed and secured from trench soil/water contamination, the water main is depressurized by a shutdown to complete the repair. The repair site should be cleaned and disinfected by spraying or swabbing with a minimum 1 percent chlorine solution. The water main is then returned to service with flushing to scour the pipe and obtain three volumes of water turnover, making sure that the flushed water is visually clear. It is advisable to check for a typical system chlorine residual, and if not found, to continue flushing until residuals are restored to levels maintained in the distribution system by the water utility—if the system operates with a disinfectant residual.

   When the existing pipe has to be opened and the interior surfaces of the water system exposed to the environment, additional procedures need to be followed. The existing pipe should be inspected and cleaned with the help of flushing water into the trench, where possible, until the flush water runs visually clear. The repair site should be accessible and the trench adequately dewatered so that the repair site can be cleaned and disinfected by spraying or swabbing with a minimum 1 percent chlorine solution. Additionally, any accessible upstream and downstream interior of the existing pipe should be disinfected by swabbing or spraying with a minimum 1 percent chlorine solution. If the repair requires a full pipe section replacement, the new pipe should be inspected, cleaned, and disinfected from both ends by swabbing with a minimum 1 percent chlorine solution. The water main may then be returned to service after flushing to scour the pipe and obtain three volumes of water turnover. The flushed water should run visually clear, have a measurable chlorine residual if the system operates with a residual, and be checked with bacteriological testing. The pipeline may be returned to service prior to obtaining bacteriological results.

   iii. Uncontrolled pipe break with a likelihood of water contamination or loss of sanitary conditions during repair. In situations in which the existing main to be repaired could not be protected and kept free of contamination and there are obvious signs of contamination (e.g., muddy trench water flowing into the broken pipe and a leaking sewer pipe in the trench, or catastrophic pipe failure where pipe is open and there is a likelihood that contamination was drawn into the active system) or when a controlled repair situation turns into a situation in which the internal pipe and water have become contaminated, the procedures outlined in 1.05-D.3 / 4 / 5 / 6 should be followed where practical. These methods specify chlorine doses of 25–300 mg/L; however, such levels may present greater harm

if the line or services cannot be reliably isolated or shut down and exposure of customers to high concentrations of chlorine cannot be controlled. Free chlorine residuals up to 4 mg/L (based on annual averages) are allowed by federal drinking water regulations; therefore this level is suggested as a minimum to be maintained for at least 16 hr in conjunction with flushing, coliform sampling, and associated customer education. Such situations require careful review and need to balance the public health risks of the pipeline failure as well as the repair process.

Where practical and appropriate considering the risks of public exposure to high concentrations of chlorine, in addition to the procedures previously described in this standard, the section of pipe in which the break is located shall be isolated, all service connections shut off, and the section flushed and disinfected. If the slug chlorination method is employed, the dose may be increased to as much as 300 mg/L and the contact time reduced to as little as 15 min. After chlorination and repair, perform scour flushing at 3.0 ft/sec (0.91 m/sec) or greater for a minimum of three pipe volumes and continue until discolored water is not observed and the chlorine residual is restored to the levels maintained in the distribution system by the water utility.

For larger-diameter pipe (12 in. and greater), if a water velocity of 3.0 ft/sec (0.91 m/sec) cannot be achieved, it is desirable to flush at the maximum flow for the main until three pipe volumes have been displaced before returning the main to service. The flushed water should run visually clear, and have typical system chlorine residual (if the system operates with a disinfectant residual).

For very-large-diameter pipe (where personnel may safely enter the pipe), in lieu of flushing following disinfection, the interior of the pipe at the repair site may be cleaned by sweeping or high pressure wash using potable water before disinfection. Standing water and debris from the cleaning must be removed from the pipe prior to disinfection. The affected pipe shall be disinfected by swabbing or spraying with a minimum 1 percent chlorine solution.

After following the appropriate methods above, prior to returning the pipe to service, the efficacy of the disinfection procedure shall be verified by testing for the absence of coliform bacteria. If allowed by local regulations, the pipeline may be returned to limited service prior to obtaining bacteriological results with proper notification of the affected customers.

iv. Temporary service lines. Temporary water service lines to customers using main repair activities shall be disinfected prior to use. Materials shall meet the NSF/ANSI 61 certification for potable water use. Disinfection should be accomplished by the procedures in 1.05-D.4 / 5 followed by scour flushing at 3.0 ft/sec (0.91 m/sec) or greater for a minimum of three pipe volumes (see Table 3), or until the water runs visually clear and preferably a measurable chlorine residual is restored.

Table 1 Weight of calcium hypochlorite granules to be placed at beginning of main and at each 500-ft (150-m) interval

Pipe Diameter (*d*)		Calcium Hypochlorite Granules	
in.	*(mm)*	*oz*	*(g)*
4	(100)	1.7	(48)
6	(150)	3.8	(108)
8	(200)	6.7	(190)
10	(250)	10.5	(298)
12	(300)	15.1	(428)
14 and larger	(350 and larger)	$D^2 \times 15.1$	$D^2 \times 428$

Where D is the inside pipe diameter, in feet $D = d/12$

Table 2 Number of 5-g calcium hypochlorite tablets required for dose of 25 mg/L*

Pipe Diameter		Length of Pipe Section, *ft (m)*				
		13 (4.0) or less	18 (5.5)	20 (6.1)	30 (9.1)	40 (12.2)
in.	*(mm)*	Number of 5-g Calcium Hypochlorite Tablets				
4	(100)	1	1	1	1	1
6	(150)	1	1	1	2	2
8	(200)	1	2	2	3	4
10	(250)	2	3	3	4	5
12	(300)	3	4	4	6	7
16	(400)	4	6	7	10	13

*Based on 3.25-g available chlorine per tablet

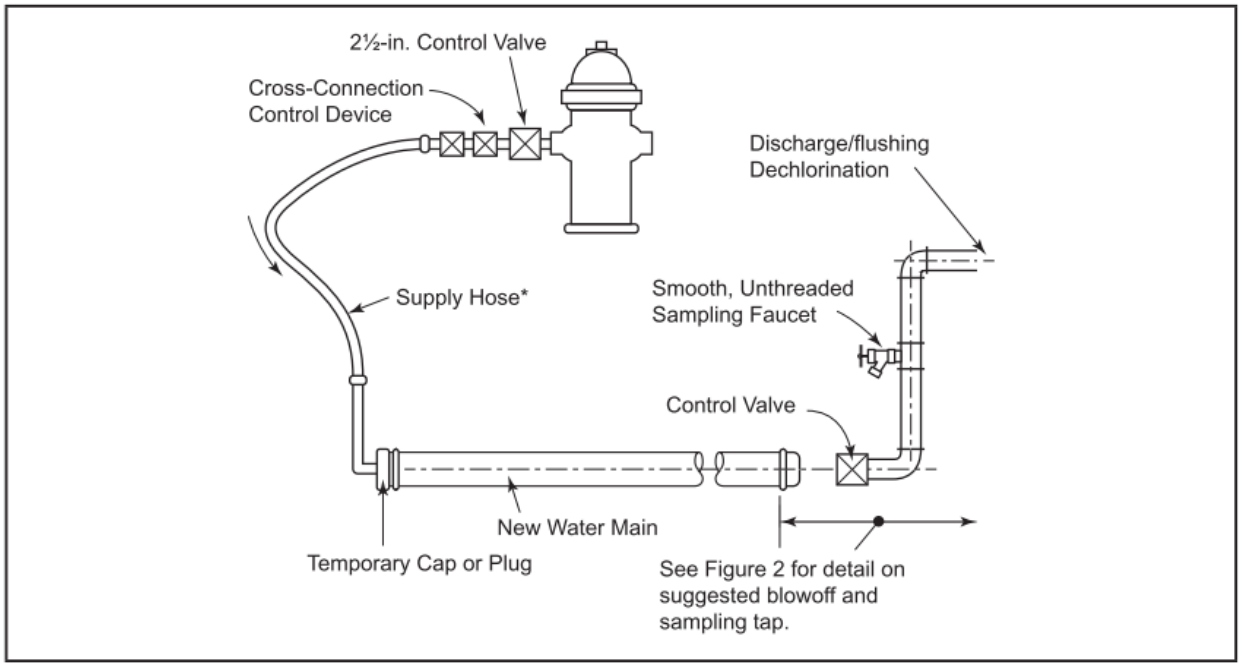

NOTE: Figure 1 applies to pipes with diameters 4 in. (100 mm) through 12 in. (300 mm). Larger sizes must be handled on a case-by-case basis.

*Clean potable-water hose only. Size and number of taps per Table 3. This hose must be removed during the hydrostatic pressure test.

Figure 1 Suggested temporary flushing/testing connection

Table 3 Required flow and openings (either taps or hydrants) to flush pipelines at 3.0 ft/sec (0.91 m/sec) (40 psi [276 kPa] residual pressure in water main)*

Pipe Diameter		Flow Required to Produce 3.0 ft/sec (approx.) Velocity in Main		Size of Tap Used, *in. (mm)*			Number of Hydrant Outlets	
				1 (25)	1½ (38)	2 (51)		
in.	*(mm)*	*gpm*	*(L/sec)*	Number of Taps Required on Pipe†			2½-in. (64-mm)	4½-in. (114 mm)
4	(100)	120	(7.4)	1	—	—	1	1
6	(150)	260	(16.7)	—	1	—	1	1
8	(200)	470	(29.7)	—	2	—	1	1
10	(250)	730	(46.3)	—	3	2	1	1
12	(300)	1,060	(66.7)	—	—	3	2	1
16	(400)	1,880	(118.6)	—	—	5	2	1

*With a 40-psi (276-kPa) pressure in the main with the hydrant flowing to atmosphere, a 2½-in. (64-mm) hydrant outlet will discharge approximately 1,000 gpm (63.1 L/sec); and a 4½-in. (114-mm) hydrant outlet will discharge approximately 2,500 gpm (160 L/sec).

†Number of taps on pipe based on 3.0-ft/sec discharge through 5 ft (1.5 m) of galvanized iron (GI) pipe with one 90° elbow.

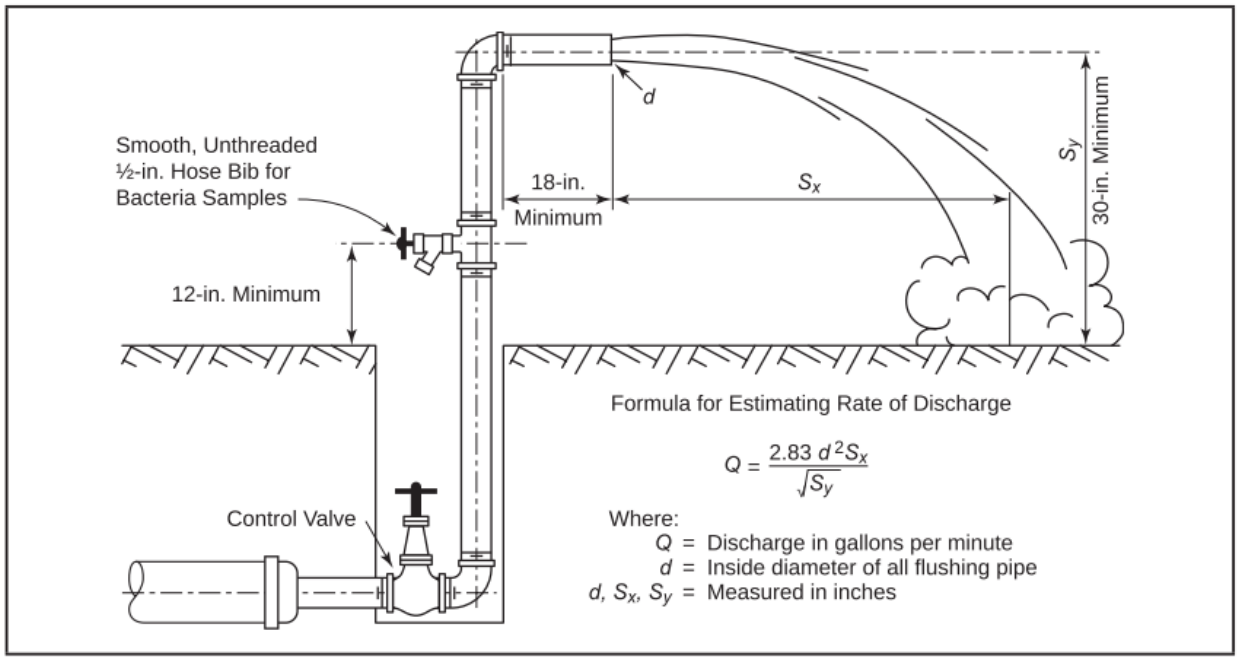

NOTE: This figure applies to pipes up to and including 8-in. (200-mm) diameter.

Figure 2 Suggested combination blowoff and sampling tap

Table 4 Chlorine required to produce an initial 25-mg/L concentration in 100 ft (30.5 m) of pipe by diameter

Pipe Diameter		100% Chlorine		1% Chlorine Solution	
in.	*(mm)*	*lb*	*(g)*	*gal*	*(L)*
4	(100)	0.013	(5.9)	0.16	(0.6)
6	(150)	0.030	(13.6)	0.36	(1.4)
8	(200)	0.054	(24.5)	0.65	(2.5)
10	(250)	0.085	(38.6)	1.02	(3.9)
12	(300)	0.120	(54.4)	1.44	(5.4)
16	(400)	0.217	(98.4)	2.60	(9.8)

E. BACTERIOLOGICAL TESTS

1. Bacteriological Tests
    a. Standard conditions for new mains. It should be recognized that the primary means of ensuring the sanitary integrity of a main are the sanitary handling of materials, the practices during construction, and continual inspection of work. After disinfection and final flushing such that typical system chlorine residuals are present, if the system operates with a residual, samples shall be collected as follows:
        i. For new mains, the purchaser has two options for the bacteriological testing for total coliform analysis.
            1. Option A: Before approving a main for release, take an initial set of samples and then resample again after a minimum of 16 hr using the sampling site procedures outlined. Both sets of samples must pass for the main to be approved for release.
            2. Option B: Before approving a main for release, let it sit for a minimum of 16 hr without any water use. Then collect, using the sampling site procedures outlined and without flushing the main, two sets of samples a minimum of 15 min apart while the sampling taps are left running. Both sets of samples must pass for the main to be approved for release.
        ii. A set of samples includes all samples collected along the length of the pipeline, as described in 1.05-E.1.a.ii.
        iii. For new mains, sets of samples shall be collected every 1,200 ft (370 m) of the new water main, plus one set from the end of the line and at least one from each branch greater than one pipe length.

iv. If trench water has entered the new main during construction or if, in the opinion of the purchaser, excessive quantities of dirt or debris have entered the new main, bacteriological samples shall be taken at intervals of approximately 200 ft (61 m), and the sampling location shall be identified (see 1.05-E.1.c for sampling location details). Samples shall be taken of water that has stood in the new main for at least 16 hr after final flushing has been completed.

v. A standard heterotrophic plate count (HPC) test may be required at the option of the purchaser because new mains do not typically contain coliform bacteria but often contain HPC bacteria. If sample results show HPC greater than 500 CFU/mL, flushing should resume and another set of HPC and coliform samples collected until no coliform are present and the HPC is less than 500 CFU/mL.

b. Standard conditions for repaired mains. It should be recognized that the primary means of ensuring the sanitary integrity of a main are the sanitary handling of materials, the practices during repair work, and continual inspection of work. After disinfection and final flushing, samples shall be collected as follows:

i. For repaired mains that were depressurized and/or wholly or partially dewatered, one set of samples may be required, and depending upon the sanitary conditions, the line may be reactivated prior to the completion of bacteriological testing. Samples shall be collected downstream of the repair site and at intervals of approximately 200 ft (61 m) within the length of pipe that was shut down. If direction of flow is not known, samples shall be collected on either side of the repair site. Refer to 1.05-D.11.

ii. For repaired mains that were maintained under pressurized conditions at all times, disinfection and/or testing may not be required. Refer to 1.05-D.11.c.

iii. However, under either main repair scenario, it is advisable where possible to provide a scour flush to clear before the release of the repaired section.

c. Sampling procedure. Samples for bacteriological analysis shall be collected in sterile bottles treated with sodium thiosulfate, in accordance with Section 9060—Samples of Standard Methods for the Examination of Water and Wastewater. Hoses and fire hydrants are not recommended for the collection of samples that will be used to make decisions on the bacteriological quality of drinking water. However, if no sampling port is available, cleaned fire hydrants that have been cleared of standing water and/or other sanitized sampling apparatus (i.e., sanitized tubing, hose, gooseneck, spigot) may be used with the understanding that they do not represent optimum access to the water main for bacteriological sampling. A suggested combination blowoff and sampling tap used for mains up to and including 8-in. (200-mm) diameter is shown in Figure 2. There should be no water in the trench up to the connection for sampling. The sampling pipe must be dedicated and clean and disinfected and flushed prior to sampling. A corporation cock may be installed in the main with a copper-tube gooseneck assembly. After samples have been collected, the gooseneck assembly may be removed and retained for future use and the corporation cock should be capped or taped for future reuse. If corporation cocks are placed at the 12 o'clock position, they may be struck more easily during future excavations.

d. Sample results. Samples shall be tested for bacteriological quality in accordance with Standard Methods for the Examination of Water and Wastewater and shall show the absence of coliform bacteria. In addition, it is recommended that samples be tested for acceptable aesthetic quality (e.g., chlorine residual, pH, alkalinity, specific conductance, turbidity). Levels should be as expected or typical for the water system. For new mains, a standard heterotrophic plate count test may be required at the option of the purchaser because new mains do not typically contain coliform bacteria but often contain HPC bacteria. If sample results show HPC greater than 500

CFU/mL, flushing should resume and another set of HPC and coliform samples collected until no coliform are present and the HPC is less than 500 CFU/mL.

e. Record of compliance. The record of compliance shall be the bacteriological test results certifying that the water sampled is free of coliform bacteria contamination.

f. Redisinfection. If the initial disinfection fails to produce satisfactory bacteriological results, or if other results indicate unacceptable water quality, the main may be reflushed and shall be resampled. If check samples fail to produce acceptable results, the main shall be rechlorinated by the continuous-feed or slug method until satisfactory results are obtained—that being acceptable samples taken as described in 1.05-E.1.a.i.

Note: In the case of new mains, high velocities in the adjacent existing sys tem, resulting from flushing the new main, may disturb sediment that has accumulated in the existing mains. When check samples are taken, it is advisable to sample water entering the new main to determine if excessive turbidity is present that could be interfering with results.

2. Optional Sampling and Testing

a. If a pipeline is not promptly returned to service, the situation should be evaluated to determine if the water quality may have been impacted and if additional testing is warranted. Test results should confirm that the water quality is appropriate for distribution. Although this assessment is unique for each system, parameters considered for testing include disinfectant residual, total coliform bacteria, HPC, turbidity, pH, alkalinity, total chlorine, odor, and specific conductance.

1.06 WATER MAIN EXTENSION PERMIT

A. DESCRIPTION

1. Water service permits have been applied for this project. The permit approvals shall be part of this specification and the Contractor shall be responsible for all conditions, requirements, and inspections as stated in the permits.

END OF SECTION 331400

SECTION 333100 - SANITARY UTILITY SEWERAGE PIPING

PART 1 - GENERAL

1.01 SANITARY SEWER PIPE

A. DESCRIPTION

1. Sanitary sewer pipe shall consist of trench excavation, removal of existing sanitary sewer, bypass pumping as required, furnishing and installing new sanitary sewer as specified, bedding material, backfill and complete restoration of disturbed areas, construction layout of new sanitary sewer with service laterals and follow up internal television inspection.

B. MATERIALS FOR PIPES AND FITTINGS

Schedule 80 PVC.

a. Solid-Wall PVC Pipe: ASTM D1785, Schedule 80, polyvinyl chloride (PVC) pressure pipe

b. Schedule 80 PVC pipe shall be used only where indicated on the plans, including but not limited to exposed piping, sleeves, mechanical room piping, or locations subject to impact or increased structural demand. Schedule 80 PVC shall not be used for perforated drainage applications.

c. PVC Pressure Fittings:

a. ASTM D2464 for molded Schedule 80 PVC fittings, or
b. ASTM D2467 for fabricated Schedule 80 PVC fittings.

Fittings shall be compatible with Schedule 80 pipe and rated for the same pressure class.

d. Joints:

Joints shall be solvent-welded using primer and solvent cement recommended by the pipe manufacturer for Schedule 80 PVC pressure pipe.

e. Adhesive Primer: ASTM F656

a. Adhesive primer shall have a VOC content of 550 g/L or less when calculated according to 40 CFR 59, Subpart D (EPA Method 24).
b. Adhesive primer shall comply with the testing and product requirements of the California Department of Health Services “Standard Practice for the Testing of Volatile Organic Emissions from Various Sources Using Small-Scale Environmental Chambers.”

a. Solvent Cement: ASTM D 2564, heavy-body solvent cement suitable for Schedule 80 PVC pressure pipe.

1. PVC solvent cement shall have a VOC content of 510 g/L or less when calculated according to 40 CFR 59, Subpart D (EPA Method 24).

2. Solvent cement shall comply with the testing and product requirements of the California Department of Health Services' "Standard Practice for the Testing

of Volatile Organic Emissions from Various Sources Using Small-Scale Environmental Chambers."

C. CONNECTIONS

1. Pipe connections to the manhole shall be made with flexible connectors capable of sealing the annular space between the pipe and the manhole opening and of centering the pipe in the opening.
2. Connections to existing pipe, if and where applicable, shall be the fernco flexible pipe coupling appropriate for the material for the existing pipe, fernco couplings, or approved equal.

D. CONSTRUCTION REQUIREMENTS FOR SANITARY SEWER REPLACEMENT

1. Open cut excavations shall be made in accordance with the latest provisions of "Subpart P - Excavations, Trenching and Shoring" taken from the Department of Labor, Occupational Safety and Health Administration Construction Safety and Health Regulations as published in the Federal Register and also in accordance with the requirements of subsection 207.04-.07 of the NJDOT Standard Specifications, to protect life, property or the work.
2. The existing sanitary sewer pipe shall be removed as indicated on the plans. Upon removal of the existing pipe, bypass pumping shall be provided except at the direction of the engineer. The contractor shall provide and maintain pumps, piping, hoses, labor, and supervision necessary for the bypass pumping during sanitary sewer replacements.
3. Excavation shall be carried to a depth of six inches below the existing invert grades. Upon this subgrade foundation, a cushion of bedding material as per the construction detail shall be placed and compacted to the grade of the underside of the pipe barrel. The pipe shall then be set to the line and grade and additional bedding material placed to one foot above the pipe.
4. Pipe shall not be laid until the exact locations of utility structures in the vicinity have been determined in the field and the line and grade of the pipes have been approved by the engineer.
5. Supports for existing utilities shall be provided as directed by the engineer.
6. Dewatering methods and equipment shall be adequate to properly dewater the work and shall be subject to the approval of the engineer. In no case will the laying of pipe or the placing of masonry be permitted with water in the excavation nor will completed portions of the work be used as a means of dewatering trenches. Water removed from the work shall be disposed of in an approved manner without damage to adjacent property or other work. All sewage wastes removed from the excavation shall be transported to the municipal sewage treatment plant for disposal.

7. Pipe shall be installed according to the manufacturer's recommendations and the current best practice in the industry.
8. When cutting the pipe is required, the work shall be done with a power saw using a blade appropriate for the material in order to leave a smooth end at a right angle to the axis of the pipe.
9. Prior to the laying of pipe and trench drains, the method to control alignment and grade shall be submitted for approval. The method shall be a laser system or grade board set up to establish a reference grade and alignment control directly above or in the pipe and along the invert of the trench drain.
10. Broken pipe or otherwise damaged pipe shall be replaced.
11. Existing sanitary sewer service laterals must be confirmed by the contractor either during construction or through records obtained by the municipality. All sanitary sewer house connections shall be made flush with the outside edge of the new sanitary sewer pipe and shall be watertight.
12. The contractor should exercise care during construction. If any damage occurs to the existing sanitary pipes, manholes, or service laterals because of the contractor's operations,

all damaged material shall be replaced in kind and in a manner satisfactory to the Township at the contractor's expense.

13. All excavations shall be completely backfilled and as great a portion as possible of the excavated material shall be used for backfill. The excavated material to be used for backfill shall be free from stumps, brush, weeds, roots, sod, rubbish, garbage, and other matter that may decay. The excavated material to be used for backfill shall also be free from rock, boulders, frozen materials and clay. It shall be suitable granular material as approved by the engineer. Excavations and backfill shall meet the requirements of Section 2.1 - Earthwork and other applicable sections of this specification.

1.02 MANHOLES, SANITARY SEWERS

A. DESCRIPTION

1. The work of this item shall consist of the construction of sanitary sewer manholes in accordance with the drawings and specifications, at the required locations and to the prescribed lines, grade, and dimensions.

B. MATERIALS

1. Material shall conform to the requirements specified therefore in Sub-Section 652.02 of the 2019 NJDOT Standard Specifications.

C. CONSTRUCTION REQUIREMENTS

1. The manhole bottoms shall be Class C concrete. Concrete channels shall be formed in the bottom with a cross section of the depth of one half the sewer diameter, shall slope to the outlet, matching the exact shape of the sewer invert. Channels shall have a minimum slope and shall have a smooth surface.
2. Manhole walls shall be constructed of concrete block and all joints between blocks shall be completely filled with 1:2 cement-sand mortar. Joints shall be made to produce a smooth and uniform surface. The outside surface of each manhole shall be plastered 1/2 inch thick and troweled smooth with cement-sand mortar of the same consistency as above. The outside plastered surface shall be allowed to dry, and then shall be painted with one seal coat of coal tar or asphalt. Manhole walls may be constructed of poured concrete, subject to approval by engineer.
3. Frames shall be well bedded in mortar, making a watertight joint, and shall be adjusted so that the rim is approximately 1/4 inch above finished grade. Cover and frame shall have a shop coat of asphaltic pitch and shall have a field coat of similar paint after the frame is set in final position. Steps shall be provided in the manhole as shown on the drawings.
4. Each manhole shall be constructed absolutely watertight. Manholes that are not watertight will not be accepted. Plastering on top of defective joints to correct leaky conditions will not be permitted.
5. All work shall be done in a workmanlike manner and shall be subject to inspection, requirements and approval of the Municipality.
6. Precast manholes shall be an acceptable alternative.

1.03 SANITARY SERVICE CONNECTIONS

A. DESCRIPTION

1. The work of this item shall consist of the replacement and construction sanitary sewer laterals from the proposed sanitary sewer pipe to behind the proposed or existing curb, risers, and branch connections. The new lateral shall be of equal or greater size than existing.
2. This item shall include the excavation, removal of existing, bypass pumping as required, furnishings and installing the new sanitary service lateral between the main and a new

cleanout, bedding material, backfill and complete restoration of disturbed areas, and a construction layout showing the new service laterals and sanitary sewer main. Also to be included will be a new pipe cleanout, tee, hub, and all miscellaneous items and labor necessary for installation from the main to the new cleanout and to connect the new service lateral from the building to the new cleanout.

B. CONSTRUCTION REQUIREMENTS

1. The contractor shall also aid the engineer taking measurements as necessary to permanently locate branch conditions.
2. Building laterals shall be laid coincidental with, or shortly after, the main sewer is installed so that repairs and cleanup are rapidly completed.
3. The pipe shall be laid on continuous upgrade of not less than 1/8" per foot and located where ordered by the engineer.
4. The General Contractor (GC) shall be responsible for the service connection from the main to the building and the connection to the building sanitary waste line.

END OF SECTION 333100

SECTION 334200 – SUBDRAINAGE

PART 1 - GENERAL

1.1 RELATED DOCUMENTS

A. Drawings and general provisions of the Contract, including General and Supplementary Conditions and Division 01 Specification Sections, apply to this Section.

1.2 SUMMARY

A. Section Includes:

1. Perforated-wall pipe and fittings.
2. Drainage conduits.
3. Drainage panels.
4. Geotextile filter fabrics.

1.3 ACTION SUBMITTALS

A. Product Data:

1. Drainage conduits, including rated capacities.
2. Drainage panels, including rated capacities.
3. Geotextile filter fabrics.
4. Weep holes, wall drains and sleeves.

PART 2 - PRODUCTS

2.1 PERFORATED-WALL PIPES AND FITTINGS

A. Perforated PE Pipe and Fittings:

1. NPS 6 (DN 150) and Smaller: ASTM F 405 or AASHTO M 252, Type CP; corrugated, for coupled joints.
2. NPS 8 (DN 200) and Larger: ASTM F 667; AASHTO M 252, Type CP; or AASHTO M 294, Type CP; corrugated; for coupled joints.
3. Couplings: Manufacturer's standard, band type.

B. Perforated PVC Sewer Pipe and Fittings: ASTM D 2729, bell-and-spigot ends, for loose joints.

C. Wall Drains: 22 gage stainless steel tube with 22 gauge removable stainless steel lover face plate and expanded stainless steel insect screen.

D. Weep Holes: 3” diameter PVC pipe with stainless steel screen.

2.2 DRAINAGE PANELS

A. Molded-Sheet Drainage Panels: Prefabricated geocomposite, 36 to 60 inches wide with drainage core faced with geotextile filter fabric.

1. Products

a. Miradrain 6000 by Mirati, Inc.
Norcorss, GA 30092
b. Hydraway 300 by Monsanto Company
St. Louis, MO 63617

2. Drainage Core: Three-dimensional, nonbiodegradable, molded PP.

a. Minimum Compressive Strength: 10,000 lbf/sq. ft when tested according to ASTM D 1621.
b. Minimum In-Plane Flow Rate: 15 gpm/ft. of unit width at hydraulic gradient of 1.0 and compressive stress of 25 psig when tested according to ASTM D 4716.

3. Filter Fabric: Nonwoven needle-punched geotextile, manufactured for subsurface drainage, made from polyolefins or polyesters; with elongation greater than 50 percent; complying with the following properties determined according to AASHTO M 288:

a. Burst Strength (ASTM D1682): 100 lbs.
b. Apparent Opening Size: No. 40, maximum.
c. Flow (CFMC GET-2): 130 gpm/ft2
d. Grab Strength (ASTM D1682): 100 lbs.
e. Weight (ASTM D3776): 40 oz./yd2.

4. Film Backing: Polymeric film bonded to drainage core surface.

2.3 GEOTEXTILE FILTER FABRICS

A. Description: Fabric of PP or polyester fibers or combination of both, with flow rate range from 110 to 330 gpm/sq. ft when tested according to ASTM D 4491.

B. Structure Type: Nonwoven, needle-punched continuous filament.

1. Survivability: AASHTO M 288 Class 2.

2. Styles: Flat and sock.

PART 3 - EXECUTION

3.1 EXAMINATION

A. Examine surfaces and areas for suitable conditions where subdrainage systems are to be installed.

B. If subdrainage is required for landscaping, locate and mark existing utilities, underground structures, and aboveground obstructions before beginning installation and avoid disruption and damage of services.

C. Verify that drainage panels installed as part of foundation wall waterproofing is properly positioned to drain into subdrainage system.

D. Proceed with installation only after unsatisfactory conditions have been corrected.

3.2 EARTHWORK

A. Excavating, trenching, and backfilling are specified in Section 312000 "Earth Moving."

3.3 FOUNDATION DRAINAGE INSTALLATION

A. Place impervious fill material on subgrade adjacent to bottom of footing after concrete footing forms have been removed. Place and compact impervious fill to dimensions indicated, but not less than 6 inches deep and 12 inches wide.

B. Lay flat-style geotextile filter fabric in trench and overlap trench sides.

C. Place supporting layer of drainage course over compacted subgrade and geotextile filter fabric, to compacted depth of not less than 4 inches.

D. Encase pipe with sock-style geotextile filter fabric before installing pipe. Connect sock sections with adhesive or tape.

E. Install drainage piping as indicated in Part 3 "Piping Installation" Article for foundation subdrainage.

F. Add drainage course to width of at least 6 inches on side away from wall and to top of pipe to perform tests.

G. After satisfactory testing, cover drainage piping to width of at least 6 inches on side away from footing and above top of pipe to within 12 inches of finish grade.

H. Install drainage course and wrap top of drainage course with flat-style geotextile filter fabric.

I. Place layer of flat-style geotextile filter fabric over top of drainage course, overlapping edges at least 4 inches (100 mm).

J. Install drainage panels on foundation walls as follows:

1. Coordinate placement with other drainage materials.

2. Lay perforated drainage pipe at base of footing. Install as indicated in Part 3 "Piping Installation" Article.

3. Separate 4 inches of fabric at beginning of roll and cut away 4 inches of core. Wrap fabric around end of remaining core.

4. Attach panels to wall beginning at subdrainage pipe. Place and secure molded-sheet drainage panels, with geotextile facing away from wall.

K. Place backfill material over compacted drainage course. Place material in loose-depth layers not exceeding 6 inches. Thoroughly compact each layer. Final backfill to finish elevations and slope away from building.

3.4 UNDERSLAB DRAINAGE INSTALLATION

A. Excavate for underslab drainage system after subgrade material has been compacted but before drainage course has been placed. Include horizontal distance of at least 6 inches between drainage pipe and trench walls. Grade bottom of trench excavations to required slope, and compact to firm, solid bed for drainage system.

B. Lay flat-style geotextile filter fabric in trench and overlap trench sides.

C. Place supporting layer of drainage course over compacted subgrade and geotextile filter fabric, to compacted depth of not less than 4 inches.

D. Encase pipe with sock-style geotextile filter fabric before installing pipe. Connect sock sections with adhesive or tape.

E. Install drainage piping as indicated in Part 3 "Piping Installation" Article for underslab subdrainage.

F. Add drainage course to width of at least 6 inches on side away from wall and to top of pipe to perform tests.

G. After satisfactory testing, cover drainage piping with drainage course to elevation of bottom of slab, and compact and wrap top of drainage course with flat-style geotextile filter fabric.

H. Install horizontal drainage panels as follows:

1. Coordinate placement with other drainage materials.

2. Lay perforated drainage pipe at inside edge of footing.

3. Place drainage panel over drainage pipe with core side up. Peel back fabric and wrap fabric around pipe. Locate top of core at bottom elevation of floor slab.

4. Butt additional panels against other installed panels. If panels have plastic flanges, overlap installed panel with flange.

3.5 RETAINING-WALL DRAINAGE INSTALLATION

A. Lay flat-style geotextile filter fabric in trench and overlap trench sides.

B. Place supporting layer of drainage course over compacted subgrade to compacted depth of not less than 4 inches.

C. Encase pipe with sock-style geotextile filter fabric before installing pipe. Connect sock sections with adhesive or tape.

D. Install drainage piping as indicated in Part 3 "Piping Installation" Article for retaining-wall subdrainage.

E. Add drainage course to width of at least 6 inches on side away from wall and to top of pipe to perform tests.

F. After satisfactory testing, cover drainage piping to width of at least 6 inches on side away from footing and above top of pipe to within 12 inches of finish grade.

G. Place drainage course in layers not exceeding 3 inches in loose depth; compact each layer placed and wrap top of drainage course with flat-style geotextile filter fabric.

H. Place layer of flat-style geotextile filter fabric over top of drainage course, overlapping edges at least 4 inches.

I. Install drainage panels on wall as follows:

1. Coordinate placement with other drainage materials.

2. Lay perforated drainage pipe at base of footing as described elsewhere in this Specification. Do not install aggregate.

3. If weep holes are used instead of drainage pipe, cut 1/2-inch-diameter holes on core side at weep-hole locations. Do not cut fabric.

4. Mark horizontal calk line on wall at a point 6 inches less than panel width above footing bottom. Before marking wall, subtract footing width.

5. Separate 4 inches of fabric at beginning of roll and cut away 4 inches of core. Wrap fabric around end of remaining core.

6. Attach panel to wall at horizontal mark and at beginning of wall corner. Place core side of panel against wall. Use concrete nails with washers through product. Place nails from 2 to 6 inches below top of panel, approximately 48 inches apart. Construction adhesives, metal stick pins, or double-sided tape may be used instead of nails. Do not penetrate waterproofing. Before using adhesives, discuss with waterproofing manufacturer.

7. If another panel is required on same row, cut away 4 inches of installed panel core and wrap fabric over new panel.

8. If additional rows of panel are required, overlap lower panel with 4 inches of fabric.

9. Cut panel as necessary to keep top 12 inches below finish grade.

10. For inside corners, bend panel. For outside corners, cut core to provide 3 inches for overlap.

J. Fill to Grade: Place satisfactory soil fill material over compacted drainage course. Place material in loose-depth layers not exceeding 6 inches. Thoroughly compact each layer. Fill to finish grade.

3.6 LANDSCAPING DRAINAGE INSTALLATION

A. Provide trench width to allow installation of drainage conduit. Grade bottom of trench excavations to required slope, and compact to firm, solid bed for drainage system.

B. Lay flat-style geotextile filter fabric in trench and overlap trench sides.

C. Place supporting layer of drainage course over compacted subgrade and geotextile filter fabric, to compacted depth of not less than 4 inches.

D. Install drainage conduits as indicated in Part 3 "Piping Installation" Article for landscaping subdrainage with horizontal distance of at least 6 inches between conduit and trench walls. Wrap drainage conduits without integral geotextile filter fabric with flat-style geotextile filter fabric before installation. Connect fabric sections with adhesive or tape.

E. Add drainage course to top of drainage conduits.

F. After satisfactory testing, cover drainage conduit to within 12 inches of finish grade.

G. Install drainage course and wrap top of drainage course with flat-style geotextile filter fabric.

H. Place layer of flat-style geotextile filter fabric over top of drainage course, overlapping edges at least 4 inches.

I. Fill to Grade: Place satisfactory soil fill material over drainage course. Place material in loose-depth layers not exceeding 6 inches. Thoroughly compact each layer. Fill to finish grade.

3.7 PIPING INSTALLATION

A. Install piping beginning at low points of system, true to grades and alignment indicated, with unbroken continuity of invert. Bed piping with full bearing in filtering material. Install gaskets, seals, sleeves, and couplings according to manufacturer's written instructions and other requirements indicated.

1. Foundation Subdrainage: Install piping level and with a minimum cover of 36 inches unless otherwise indicated.

2. Underslab Subdrainage: Install piping level.

3. Plaza Deck Subdrainage: Install piping level.

4. Retaining-Wall Subdrainage: When water discharges at end of wall into stormwater piping system, install piping level and with a minimum cover of 36 inches unless otherwise indicated.

5. Landscaping Subdrainage: Install piping pitched down in direction of flow, at a minimum slope of 0.5 percent and with a minimum cover of 36 inches unless otherwise indicated.

6. Lay perforated pipe with perforations down.

7. Excavate recesses in trench bottom for bell ends of pipe. Lay pipe with bells facing upslope and with spigot end entered fully into adjacent bell.

B. Use increasers, reducers, and couplings made for different sizes or materials of pipes and fittings being connected. Reduction of pipe size in direction of flow is prohibited.

C. Install thermoplastic piping according to ASTM D 2321.

3.8 PIPE JOINT CONSTRUCTION

A. Join perforated PE pipe and fittings with couplings according to ASTM D 3212 with loose banded, coupled, or push-on joints.

B. Join perforated PVC sewer pipe and fittings according to ASTM D 3212 with loose bell-and-spigot, push-on joints.

C. Special Pipe Couplings: Join piping made of different materials and dimensions with special couplings made for this application. Use couplings that are compatible with and fit materials and dimensions of both pipes.

3.9 BACKWATER VALVE INSTALLATION

A. Comply with requirements for backwater valves specified in Section 334100 "Storm Utility Drainage Piping."

B. Install horizontal backwater valves in header piping downstream from perforated subdrainage piping.

C. Install horizontal backwater valves in piping in manholes or pits where indicated.

3.10 CLEANOUT INSTALLATION

A. Comply with requirements for cleanouts specified in Section 334100 "Storm Utility Drainage Piping."

B. Cleanouts for Foundation, Retaining-Wall, and Landscaping Subdrainage:

1. Install cleanouts from piping to grade. Locate cleanouts at beginning of piping run and at changes in direction. Install fittings so cleanouts open in direction of flow in piping.

2. In vehicular-traffic areas, use NPS 4 cast-iron soil pipe and fittings for piping branch fittings and riser extensions to cleanout. Set cleanout frames and covers in a cast-in-place concrete anchor, 18 by 18 by 12 inches deep. Set top of cleanout flush with grade.

3. In nonvehicular-traffic areas, use NPS 4 [cast-iron] [PVC] pipe and fittings for piping branch fittings and riser extensions to cleanout. Set cleanout frames and covers in a cast-in-place concrete anchor, 12 by 12 by 4 inches deep. Set top of cleanout [1 inch] [2 inches] above grade.

4. Comply with requirements for concrete specified in Section 033000 "Cast-in-Place Concrete." and Section 033053 "Miscellaneous Cast-in-Place Concrete."

C. Cleanouts for Underslab Subdrainage:

1. Install cleanouts and riser extensions from piping to top of slab. Locate cleanouts at beginning of piping run and at changes in direction. Install fittings so cleanouts open in direction of flow in piping.

2. Use NPS 4 cast-iron soil pipe and fittings for piping branch fittings and riser extensions to cleanout flush with top of slab.

3.11 CONNECTIONS

A. Comply with requirements for piping specified in Section 334100 "Storm Utility Drainage Piping." Drawings indicate general arrangement of piping, fittings, and specialties.

B. Connect low elevations of subdrainage system to[building's] solid-wall-piping storm drainage system.

C. Where required, connect low elevations of [foundation] [underslab] (WG To VERIFY REQUIREMENTS) subdrainage to stormwater sump pumps. Comply with requirements for sump pumps specified in Section 221429 "Sump Pumps."

3.12 IDENTIFICATION

A. Arrange for installation of green warning tapes directly over piping. Comply with requirements for underground warning tapes specified in specified in Section 312000 "Earth Moving."

1. Install PE warning tape or detectable warning tape over ferrous piping.

2. Install detectable warning tape over nonferrous piping and over edges of underground structures.

3.13 FIELD QUALITY CONTROL

A. Tests and Inspections:

1. After installing drainage course to top of piping, test drain piping with water to ensure free flow before backfilling.

2. Remove obstructions, replace damaged components, and repeat test until results are satisfactory.

B. Drain piping will be considered defective if it does not pass tests and inspections.

C. Prepare test and inspection reports.

3.14 CLEANING

A. Clear interior of installed piping and structures of dirt and other superfluous material as work progresses. Maintain swab or drag in piping and pull past each joint as it is completed. Place plugs in ends of uncompleted pipe at end of each day or when work stops.

END OF SECTION 334200

SECTION 334600 – STORM DRAINAGE

PART 1 - GENERAL

1.1 GENERAL

Furnish and install the storm drainage system as shown on the drawings.

The Contractor shall furnish and install manholes, outlet structures, catch basins, stormwater chambers, storm pipe, and fittings shown on the drawings.

Existing pipe and storm water structures to remain in place shall be cleaned and all debris removed shall be disposed of offsite. The piping to remain in place shall be saw cut and prepared for connection with the new drainage structures and piping.

1.2 STORM PIPE

A. Scope: The Contractor shall furnish, lay and joint storm drainage pipe as shown on the drawings.

The work shall include all labor, tools, materials, and equipment including bedding and joint materials.

B. Type of Pipe:

1. N-12 Dual Wall Pipe Soil Tight (STIB) HDPE as manufactured by ADS or equivalent

a. NPS 4”-10”: AASHTO M252, Type S (smooth interior with annular corrugations) with gasketed silt-tight joints.
b. NPS 12”-30”: AASHTO M294, Type S (smooth interior with annular corrugations) with gasketed silt-tight joints.

2. Schedule 40 PVC.

a. Solid-Wall PVC Pipe: ASTM D 2665, drain, waste, and vent.

b. Perforated PVC Pipe: ASTM F758. Pipe shall be Type PS46 with perforations in accordance with Section 6.2 of ASTM F758. Pipe shall be used within the French drain sections as shown on the plan documents.

c. Cellular-Core PVC Pipe: ASTM F 891, Schedule 40.

d. PVC Socket Fittings: ASTM D 2665, made to ASTM D 3311, drain, waste, and vent patterns and to fit Schedule 40 pipe.

e. Adhesive Primer: ASTM F 656.

1. Adhesive primer shall have a VOC content of 550 g/L or less when calculated according to 40 CFR 59, Subpart D (EPA Method 24).

2. Adhesive primer shall comply with the testing and product requirements of the California Department of Health Services' "Standard Practice for the Testing of Volatile Organic Emissions from Various Sources Using Small-Scale Environmental Chambers."

f. Solvent Cement: ASTM D 2564.

1. PVC solvent cement shall have a VOC content of 510 g/L or less when calculated according to 40 CFR 59, Subpart D (EPA Method 24).

2. Solvent cement shall comply with the testing and product requirements of the California Department of Health Services' "Standard Practice for the Testing of Volatile Organic Emissions from Various Sources Using Small-Scale Environmental Chambers."

3. Schedule 80 PVC.

a. Solid-Wall PVC Pipe: ASTM D1785, Schedule 80, polyvinyl chloride (PVC) pressure pipe

b. Schedule 80 PVC pipe shall be used only where indicated on the plans, including but not limited to exposed piping, sleeves, mechanical room piping, or locations subject to impact or increased structural demand. Schedule 80 PVC shall not be used for perforated drainage applications.

c. PVC Pressure Fittings:

a. ASTM D2464 for molded Schedule 80 PVC fittings, or
b. ASTM D2467 for fabricated Schedule 80 PVC fittings.

Fittings shall be compatible with Schedule 80 pipe and rated for the same pressure class.

d. Joints:

Joints shall be solvent-welded using primer and solvent cement recommended by the pipe manufacturer for Schedule 80 PVC pressure pipe.

e. Adhesive Primer: ASTM F656

a. Adhesive primer shall have a VOC content of 550 g/L or less when calculated according to 40 CFR 59, Subpart D (EPA Method 24).
b. Adhesive primer shall comply with the testing and product requirements of the California Department of Health Services "Standard Practice for the Testing of Volatile Organic Emissions from Various Sources Using Small-Scale Environmental Chambers."

g. Solvent Cement: ASTM D 2564, heavy-body solvent cement suitable for Schedule 80 PVC pressure pipe.

1. PVC solvent cement shall have a VOC content of 510 g/L or less when calculated according to 40 CFR 59, Subpart D (EPA Method 24).

2. Solvent cement shall comply with the testing and product requirements of the California Department of Health Services' "Standard Practice for the Testing of Volatile Organic Emissions from Various Sources Using Small-Scale Environmental Chambers."

4. Reinforced Concrete Pipe (RCP)

   a. Pipe Specification: AASHTO M 170, Class V, Wall B, "Standard Specification for Reinforced Concrete Culvert, Storm Drain, and Sewer Pipe." Piping shall support H-20 traffic.

   b. Manufacturing Standard: RCP shall be manufactured at plants certified by the National Precast Concrete Association (NPCA) or the American Concrete Pipe Association (ACPA).

   c. Reinforcement: Reinforcing steel shall comply with ASTM A615, Grade 60, or ASTM A1064 for welded wire reinforcement.

C. Pipe Requirements:

1. The pipe shall be accurate and of uniform dimensions. All pipe shall be straight and true to form without bulges, dents, cracks, tears, or defects which will affect strength and shall have no bulges or dents on interior surfaces which will result in a noticeable variation in diameter from that obtained on adjacent unaffected portions of the surface.

2. Only domestic materials shall be offered, provided as follows, notwithstanding any inconsistent provision of law and unless the owner shall determine it to be in consistent with public interest or the cost to be unreasonable. Only pipe manufactured in the United States shall be used on this project.

3. The contractor shall supply pipe in standard lengths.

4. Each length of pipe shall be furnished with the manufacturer's designation indicating class, size, and batch of pipe.

5. The Contractor shall supply standard manufactured fittings and adapters for all bends and differences in pipe diameters.

D. Pipe Installation:

1. All pipe shall be installed in accordance with section 601 of the 2019 NJDOT Standard Specifications.

2. All pipe shall be carefully examined for dents, cracks, and other defects, and no pipe known to be defective shall be laid. If any pipe is found to be broken or defective after being laid, it shall be removed and replaced with a sound pipe without any further payment.

3. Joint surfaces shall be protected from damage and shall be carefully examined before jointing. No damaged joints shall be used in the work.

4. Pipe shall be thoroughly cleaned and ample precautions shall be taken to prevent entrance of dirt and debris into the pipe after laying. Exposed ends of the sewer shall be provided with temporary plugs or covers.

5. All pipe shall be carefully laid to true alignment and grade. The trench bottom (6" below invert of pipe) shall be carefully graded to the proper elevation and the maximum practical solid bearing area shall be provided throughout its entire length, prior to swinging the pipe into place.

6. Care shall be taken not to excavate below grade (6” below invert). Material excavated below grade shall be replaced by material that meets with the approval of the Engineer.

7. All trenches shall be dewatered prior to laying pipe.

8. Pipe to be installed at indicated slopes free of sags and bends.

9. Install fittings for changes in direction, branch connections and changes in pipe diameter.

10. Immediately after the pipe is brought to final position, it shall be thoroughly secured and properly bedded, and ample support shall be provided to prevent settlement or disturbance.

11. Pipe shall be protected during construction against possible floatation in case the trench becomes flooded prior to placing the backfill.

12. Do not enclose, cover, or put piping into operation until it is inspected and approved by authorities having jurisdiction.

13. Install sleeves for piping penetrations of walls.

E. Jointing:

1. PVC pipe jointing:

   a. Plastic, Non-pressure-Piping, Solvent-Cement Joints: Clean and dry joining surfaces. Join pipe and fittings according to the following:

   b. Comply with ASTM F 402 for safe-handling practice of cleaners, primers, and solvent cements.

   c. PVC Piping: Join according to ASTM D 2855 and ASTM D 2665 Appendixes.

2. HDPE pipe:

   a. Pipe shall be joined using an integral bell & gasketed spigot joint meeting AASHTO M294 (NPS 12”-30”) and AASHTO M252 (NPS 4”-10”).

   b. The joint shall be soil-tight and gaskets, when applicable, shall meet the requirements of ASTM F477. Gaskets shall be installed by the pipe manufacturer and covered with a removable wrap to ensure the gasket is free from debris. A joint lubricant supplied by the manufacturer shall be used on the gasket and bell during assembly.

3. RCP pipe:

   a. RCP joints shall be soil-tight tongue-and-groove or rubber gasketed.
   b. Gasket material shall conform to ASTM C443, "Standard Specification for Joints for Circular Concrete Sewer and Culvert Pipe, Using Rubber Gaskets."
   c. Gaskets shall be factory installed and inspected for proper placement prior to installation.

4. Pipe shall be carefully jointed in conformity with the best practice and the detailed instructions of the manufacturer.

5. All pipe ends shall be thoroughly cleaned prior to and during the jointing operation.

6. At the manholes and inlet connections use flexible water stops, resilient connectors, or other flexible connections to the structures.

1.3 CLEANOUTS

A. Plastic Cleanouts:

1. Description: PVC body with PVC threaded plug. Include PVC storm sewer pipe fitting and riser to cleanout of same material as storm sewer piping.

1.4 CONNECTIONS TO EXISTING PIPING AND MANHOLES

A. Use commercially manufactured wye fittings for piping branch connections. Remove section of existing pipe; install wye fitting into existing piping; and encase entire wye fitting, plus 6-inch overlap, with not less than 6 inches of concrete with 28-day compressive strength of 4500 psi.

B. Make branch connections from side into existing piping, NPS 4 to NPS 20. Remove section of existing pipe, install wye fitting into existing piping, and encase entire wye with not less than 6 inches of concrete with 28-day compressive strength of 4500 psi.

C. Make branch connections from side into existing piping, NPS 21 or larger, or to underground manholes and structures by cutting into existing unit and creating an opening large enough to allow 3 inches of concrete to be packed around entering connection. Cut end of connection pipe passing through pipe or structure wall to conform to shape of and be flush with inside wall unless otherwise indicated. On outside of pipe, manhole, or structure wall, encase entering connection in 6 inches of concrete for minimum length of 12 inches to provide additional support of collar from connection to undisturbed ground.

a. Use concrete that will attain a minimum 28-day compressive strength of 4500 psi unless otherwise indicated.

b. Use epoxy-bonding compound as interface between new and existing concrete and piping materials.

D. Protect existing piping, manholes, and structures to prevent concrete or debris from entering while making tap connections. Remove debris or other extraneous material that may accumulate.

1.5 CATCH BASINS

A. Standard Precast Concrete Catch Basins:

1. Description: ASTM C 478, precast, reinforced concrete, of depth indicated, with provision for sealant joints.

2. Base Section: 8-inch minimum thickness for floor slab and 6-inch minimum thickness for walls and base riser section, and separate base slab or base section with integral floor.

3. Riser Sections: 6-inch minimum thickness, 48-inch diameter, and lengths to provide depth indicated.

4. Top Section: Eccentric-cone type unless concentric-cone or flat-slab-top type is indicated. Top of cone of size that matches grade rings.

5. Joint Sealant: ASTM C 990, bitumen or butyl rubber.

6. Retain one of first two subparagraphs below if required.

7. Adjusting Rings: Interlocking rings with level or sloped edge in thickness and shape matching catch basin frame and grate. Include sealant recommended by ring manufacturer.

8. Grade Rings: Include two or three reinforced-concrete rings, of 6- to 9-inch total thickness, that match 24-inch-diameter frame and grate.

9. Steps: ASTM A 615, deformed, 1/2-inch steel reinforcing rods encased in ASTM D 4101, PP, wide enough to allow worker to place both feet on one step and designed to prevent lateral slippage off step. Cast or anchor steps into sidewalls at 12- to 16-inch intervals. Omit steps if total depth from floor of catch basin to finished grade is less than 36 inches.

10. Pipe Connectors: ASTM C 923, resilient, of size required, for each pipe connecting to base section.

B. Frames and Grates: ASTM A 536, Grade 60-40-18, ductile iron designed for A-16, structural loading. Include flat grate with small square or short-slotted bicycle safe drainage openings.

1. Size: 24 by 24 inches minimum unless otherwise indicated.

2. Grate Free Area: Approximately 50 percent unless otherwise indicated.

C. Catch Basin Installation

1. General: Install catch basins, complete with appurtenances and accessories indicated.

2. Install precast concrete catch basin sections with sealants according to ASTM C 891.

3. Set tops of frames and covers flush with finished surface of catch basins that occur in pavements.

1.6 MANHOLES

A. Standard Precast Concrete Catch Basins:

1. Description: ASTM C 478 precast, reinforced concrete, of depth indicated, with provision for sealant joints.
2. Diameter: 48 inches minimum unless otherwise indicated.

3. Ballast: Increase thickness of precast concrete sections or add concrete to base section as required to prevent flotation.
4. Base Section: 6-inch minimum thickness for floor slab and 4-inch minimum thickness for walls and base riser section, and separate base slab or base section with integral floor.
5. Riser Sections: 4-inch minimum thickness and lengths to provide depth indicated.
6. Top Section: Eccentric-cone type unless concentric-cone or flat-slab-top type is indicated, and top of cone of size that matches grade rings.
7. Joint Sealant: ASTM C 990 bitumen or butyl rubber.
8. Resilient Pipe Connectors: ASTM C 923, cast or fitted into manhole walls, for each pipe connection.
9. Steps: Individual FRP steps or FRP ladder, wide enough to allow worker to place both feet on one step and designed to prevent lateral slippage off step. Cast or anchor steps into sidewalls at 12- to 16-inch intervals. Omit steps if total depth from floor of manhole to finished grade is less than 60 inches.

B. Manhole Frames and Covers:

1. Description: Ferrous; 24-inch ID by 7- to 9-inch riser with 4-inch minimum width flange and 26-inch diameter cover. Include indented top design with lettering cast into cover, using wording equivalent to "STORM SEWER."
2. Material: ASTM A 536, Grade 60-40-18 ductile iron unless otherwise indicated.

1.7 PLASTIC DRAIN BASINS (NYLOPLAST or APPROVED EQUAL)

A. Description:

Injection-molded PVC drain basin system manufactured by **Advanced Drainage Systems**, Nyloplast Drain Basin, or approved equal. Basins shall be watertight and compatible with PVC and HDPE drainage piping systems.

B. Material:

Basin structures shall be manufactured from rigid polyvinyl chloride (PVC) with integral bell connections for inlet and outlet pipes. Basin material shall be corrosion-resistant and suitable for underground storm drainage applications.

C. Configuration:

Basins shall be factory-molded with integral inlet and outlet connections sized as indicated on the plans. Field cutting, coring, or patching of basin walls shall not be permitted.

D. Dimensions

Basin diameter and depth shall be as indicated on the plans. Typical basin diameters may include 8-inch, 12-inch, 18-inch, or 24-inch nominal sizes unless otherwise noted.

E. Pipe Connections:

Pipe connections shall be watertight and made using integral bell and gasketed joints compatible with the connecting pipe material. Connections shall be capable of accommodating minor angular deflection without loss of seal.

F. Grates and Covers:

Frames, grates, and covers shall be as indicated on the plans. Grates shall be traffic-rated where installed in paved areas and pedestrian-rated where installed in landscaped areas.

G. Installation:

Basins shall be installed plumb and set to finished grade. Bedding and backfill shall conform to the requirements for adjacent storm drainage piping. Basins shall be installed in accordance with the manufacturer's written installation instructions.

H. Submittals:

Submit manufacturer's product data and installation instructions for review prior to installation.

1.8 UNDERGROUND STORMWATER CHAMBERS

A. Underground stormwater chambers shall be ADS StormTech MC-3500 Chamber System units as manufactured by Advanced Drainage Systems, Inc., or approved equal. Chambers shall be open-bottomed, arch-shaped units designed for subsurface stormwater detention and/or infiltration as shown on the drawings.

B. Nominal chamber dimensions shall be approximately 45 inches in height, 77 inches in width, and 90 inches in length.

C. Inlet, outlet, inspection, and manifold connections shall be provided as detailed on the drawings and installed in accordance with the manufacturer's written instructions.

D. Installation shall conform to manufacturer recommendations and applicable project details.

1.9 FIELD QUALITY CONTROL

A. Inspect interior of piping to determine whether line displacement or other damage has occurred. Inspect after approximately 24 inches of backfill is in place, and again at completion of Project.

1. Submit separate reports for each system inspection.

2. Defects requiring correction include the following:

a. Alignment: Less than full diameter of inside of pipe is visible between structures.

b. Deflection: Flexible piping with deflection that prevents passage of ball or cylinder of size not less than 92.5 percent of piping diameter.

c. Damage: Crushed, broken, cracked, or otherwise damaged piping.

d. Infiltration: Water leakage into piping.

e. Exfiltration: Water leakage from or around piping.

3. Replace defective piping using new materials, and repeat inspections until defects are within allowances specified.

4. Re-inspect and repeat procedure until results are satisfactory.

B. Test new piping systems, and parts of existing systems that have been altered, extended, or repaired, for leaks and defects.

1. Do not enclose, cover, or put into service before inspection and approval.

2. Test completed piping systems according to requirements of authorities having jurisdiction.

3. Schedule tests and inspections by authorities having jurisdiction with at least 24 hours' advance notice.

4. Submit separate report for each test.

5. Gravity-Flow Storm Drainage Piping: Test according to requirements of authorities having jurisdiction, UNI-B-6, and the following:

a. Exception: Piping with soil tight joints unless required by authorities having jurisdiction.

b. Option: Test plastic piping according to ASTM F 1417.

C. Leaks and loss in test pressure constitute defects that must be repaired.

D. Replace leaking piping using new materials, and repeat testing until leakage is within allowances specified.

2.0 IDENTIFICATION

A. Arrange for installation of green warning tape directly over piping and at outside edge of underground structures.

1. Use detectable warning tape over ferrous piping.

2. Use detectable warning tape over nonferrous piping and over edges of underground structures.

END OF SECTION 334600